City of Hutto

Agenda

City Council Meeting

Thursday, September 3, 2026 at 7:00 PM

Council Chambers, City Hall – 500 W. Live Oak Street

1. CALL SESSION TO ORDER

2. ROLL CALL

3. INVOCATION

4. PLEDGE OF ALLEGIANCE

5. PROCLAMATIONS

5.1. Library Card Sign-Up Month (Kristin Phillips)

6. CITY MANAGER COMMENTS

7. PUBLIC COMMENT

Please fill out required registration form before meeting. Public comment is limited to 3 minutes. City Council can not talk about any items not on the agenda per state law. Written comments for this meeting may also be sent to comments@huttotx.gov PRIOR to 4:00 pm on September 3, 2026. The email must include name, address, phone # and email to be recognized properly. Written comments will be provided to Council.

8. BOARDS AND COMMISSIONS

8.1. Consideration and possible action regarding possible appointments, re-appointments and/or removals to City Boards, Commissions, Task Forces, Economic Development Corporations, Local Government Corporations and Tax Increment Reinvestment Zone Boards, and Area Government appointments.

8.2. Consideration and possible action regarding recommendations or updates from City Council sub-committees (i.e. HISD, Fire Safety, CIP).

9. PUBLIC HEARINGS AND RELATED ACTION

9.1. Consideration and possible action on Resolution No. R-2026-172 approving the Municipal Services Agreement by and between the City of Hutto and Limmer CO 132 Real Estate, LLC related to the development known as Hutto Limmer Retail. (Howard Koontz)

9.2. Conduct a public hearing and possible action on Ordinance No. O-2026-043 approving the Annexation of the Hutto Limmer Retail Annexation tract, 4.173 acres, more or less, of land located at the south-east corner of Limmer Loop and CR 132 and the south-west corner of Limmer Loop and Mager Lane and to Establish the Base Zoning of B-2 (General Commercial) zoning district. (Howard Koontz)

9.3. Conduct a public hearing and related items in consideration and possible action to approve Ordinance No. O-2026-044 of the City of Hutto, Texas approving and adopting a budget for the City of Hutto for the Fiscal Year beginning October 1, 2026 and ending September 30, 2027 for the City of Hutto, Texas. (Alberta Barrett)

A copy of the City's proposed budget is available and located on the City's home page of its website at: www.huttotx.gov.

9.4. Consideration and possible action on Resolution No. R-2026-173 ratifying the property tax increase reflected in the City of Hutto Fiscal Year 2026-2027 operating budget. (Alberta Barrett)

9.5. Conduct a public hearing and related items in consideration and possible action to approve Ordinance No. O-2026-045 of the City of Hutto, Texas, levying Ad Valorem Taxes for the use and support of the municipal government for the City of Hutto for the Fiscal Year 2026-2027. (Alberta Barrett)

10. CONSENT AGENDA ITEMS

10.1. Consideration and possible action on Resolution No. R-2026-174 approving supplemental No. 1 in the amount of $111,512 with Freese and Nichols, Inc., related to civil engineering design services for the CR 132 Widening Project, primarily for the preparation of the preliminary geometric layout and plans, specifications and estimates (PS&E) (CIP T41-2025). (Kate Moriarty)

10.2. Consideration and possible action on Resolution No. R-2026-175 authorizing the City Manager to execute Individual Project Order (IPO) #2 with WSB, in the amount of $162,000, for Owner's Representative services to support construction project management for City Capital Improvement Program (CIP) projects. (Kate Moriarty)

10.3. Consideration and possible action on Resolution No. R-2026-176 accepting the infrastructure improvements for private development known as Lidell Walker Phase 2B, Plat name: Prairie Winds. (Kate Moriarty)

10.4. Consideration and possible action on Resolution No. R-2026-177 accepting the infrastructure improvements for private development known as Heritage Mill North Section 1. (Kate Moriarty)

10.5. Consideration and possible action on Resolution No. R-2026-178 accepting the infrastructure improvements for the traffic signal at Innovation and Limmer Loop on (CIP T13-2024). (Kate Moriarty)

10.6. Consideration and possible action on Resolution No. R-2026-179 accepting the infrastructure improvements for the Hutto Veterans Memorial, Capital Improvement Project (CIP-P06-2024) as public infrastructure. (Kate Moriarty)

10.7. Consideration and possible action on Ordinance No. O-2026-033 adopting the Second Amendment to the Stromberg Planned Unit Development (PUD) Zoning ordinance adopted by ordinance no. 0-2025-047, by allowing for residential, commercial and industrial uses by adding the First Amended development plan with the additional plan labeled as exhibit "B" with an expiration date of January 1, 2030, for the uses allowed by Exhibit "B". (Legal)

10.8. Consideration and possible action on Resolution No. R-2026-180 approving a negotiated settlement between ATMOS Cities Steering Committee and Atmos Energy Corp., Mid-Tex Division. (David Amsler)

10.9. Consideration and possible action on approving the following City Council meeting minutes: August 13, 2026 Special meeting, August 20, 2026 Work Session and August 20, 2026 Regular meeting. (Laura Hallmark/Amanda Taylor)

11. OTHER BUSINESS

11.1. Discussion and possible action regarding the Diversity, Equity, Inclusion and Belonging Commission. (Mayor Snyder)

11.2. Discussion and possible action on updating the structure, rules and expectations of City Council sub-committees. (Councilmember Zepeda)

11.3. Discussion and update on the requested cost forecast for running a city-owned fire department. (Councilmember Zepeda)

12. EXECUTIVE SESSION

The City Council for the City of Hutto reserves the right to adjourn into executive session at any time during the course of this meeting to discuss any of the matters listed above as authorized by the Texas Government Code Sections 551.071 (Litigation/Consultation with Attorney), 551.072 (Deliberations regarding real property), 551.073 (Deliberations regarding gifts and donations), 551.074 (Deliberations regarding personnel matters) or 551.076 (Deliberations regarding deployment/implementation of security personnel or devices) and 551.087 (Deliberations regarding Economic Development negotiations).

12.1. Receive legal advice pursuant to Texas Government Code Sec. 551.071, (Consultation with Attorney), to deliberate and seek legal advice regarding: a) Sales Tax Sharing Interlocal Agreements and proposed Interlocal Agreement for Fire Services with the Williamson County Emergency Services District # 3; b) Adam Orgain Restroom Project Defects (CIP P19-2024, IFB No. 2025-060-JW-02); c) Blue Hub Tax Abatement Agreement and process; d) Local Option Liquor Elections; e) Legislative Issues for the Texas 90th Legislative Session affecting the City of Hutto.

12.2. Consideration and possible action related to the Senate Bill 2038 petitions, seeking release from the City of Hutto's extraterritorial jurisdiction, by (1) A-A-A Storage Gattis School, LLC for the property located at 4400 Priem Lane, Pflugerville, TX 78660 and, (2) by Ken Fischer, Partner of FREH, LLC for the property located at 204 Benelli Drive, Hutto, TX 78634.

12.3. Receive legal advice pursuant to Texas Government Code Section 551.071 (Consultation with Attorney) and deliberations pursuant to Texas Government Code Sections 551.072, (Real Property); 551.087 (Economic Development Negotiations) related to pending economic development projects being considered by the Hutto Economic Development Corporation or the City of Hutto, including but not limited to: (a) Project Core; (b) Project Crawford; (c) Project Orchard; (d) Project Colovore ; and (e) Project 107 East St.

13. ACTION RELATIVE TO EXECUTIVE SESSION

13.1. Consideration and possible action related to Executive Session agenda items, listed above.

14. CITY COUNCIL COMMENTS

Pursuant to Texas Government Code Sec. 551.0415, a member of the governing body may make an announcement about items of community interest during a meeting of the governing body without given notice of the subject of the announcement.

14.1. General Comments from City Council

14.2. Future Agenda Items

15. ADJOURNMENT

16. CERTIFICATION

I certify that this notice of the September 3, 2026 Hutto City Council meeting was posted in accordance with the Texas Open Meetings Act on the City of Hutto website (huttotx.gov) and the City Hall bulletin board (500 W. Live Oak Street) on August 28, 2026 before 5:30 P.M.

Laura Hallmark

Laura Hallmark

The City of Hutto is committed to complying with the Americans with Disabilities Act. The Hutto City Council Chamber is wheelchair accessible. Request for reasonable special accommodations must be made 48 hours prior to the meeting. Please email the City Secretary's office at CitySecretary@huttotx.gov or call (512) 759-4839 for assistance.

TAXPAYER IMPACT STATEMENT

The City of Hutto has proposed a budget for the City's 2026-2027 fiscal year. The City intends to adopt its budget on or before September30, 2026.

Fiscal Year	Median-Valued Homestead (Median Taxable)	Tax Rate per $100 of Value	Estimated Property Tax Bill Based on (Median Taxable)
FY 2025-2026 (Tax Year 2025) As of Last Supplement	$351,580	Adopted 2025 Tax Rate: $0.385928	$1,356.85
FY 2026-2027 (Tax Year 2026) As of Certification	$329,770	2026 No New Revenue Tax Rate: $0.397011	$1,309.22
FY 2026-2027 (Tax Year 2026) As of Certification	$329,770	Proposed 2026 Tax Rate Based on the Proposed Budget for 2026-2027: $0.397011	$1,309.22

** Estimates are based on currently available taxable values and the FY 2026 adopted tax rate. Final FY 2027 tax rates and impact will be determined following receipt of the Certified Appraisal Data and completion of the Truth-in-Taxation calculations.

AGENDA ITEM REPORT
9.1.

To:	City Council
Subject:	Consideration and possible action on Resolution No. R-2026-172 approving the Municipal Services Agreement by and between the City of Hutto and Limmer CO 132 Real Estate, LLC related to the development known as Hutto Limmer Retail. (Howard Koontz)
Meeting:	Thursday, September 3, 2026
Department:	Development Services /
Staff Contact:	Howard Koontz

ITEM SUMMARY:

The 4.17-acre site related to this proposal is currently three (3) undeveloped lots located at the southeast corner of Limmer Loop and CR 132 and the southwest corner of Limmer Loop and Mager Lane, in Hutto's extraterritorial jurisdiction. The proposed use for this site is non-residential, consisting of a single-story convenience store of approximately 5,000 square feet with 12 gas pumps and an 8,000 square foot retail building.

This item shall properly execute the Municipal Services Agreement via Resolution approval and, in turn, facilitate the correlating Ordinance Item regarding the annexation of the property.

STAFF RECOMMENDATION:

This proposal seeks approval of a Municipal Services Agreement for three adjacent parcels situated along the Southside of Limmer Loop between Mager Lane and CR132.
Service providers that will not change as a function of this agreement include: Fire & Life Safety Services (ESD #3), Health Department Services and Health Code Enforcement (Williamson County).

Service providers that will transfer to the newly annexed property or will be newly activated by the function of this agreement include: Police & Code Compliance Enforcement (City of Hutto); Building Plan Review, Building Permitting and Inspections, Comprehensive Planning and Zoning Services (City of Hutto); Library — for future residents, if any (City of Hutto); Street Maintenance (City of Hutto); Storm Water Management (City of Hutto); Street Lighting - after ROW infrastructure is turned over (City of Hutto); Traffic Engineering (City of Hutto); Solid Waste Services (consistent with current City of Hutto policies); Parks & Trails — for future residents, if any (City of Hutto); Water Services (City of Hutto); Wastewater Services (City of Hutto).

Staff recommends City Council approve this Municipal Services Agreement, as presented.

FISCAL NOTES:

AGENDA ITEM REPORT
9.1.

FISCAL NOTES
The facilitation of services via this Municipal Service Agreement shall benefit the City through the collection of associated applicable service fees and taxes.

ATTACHMENTS:

1. Resolution No. R-2026-XXX
2. Exhibit A: Municipal Services Agreement
3. Limmer Retail MSA 08.26.26
4. Exhibit AA: PROPERTY DESCRIPTION AND DEPICTION
5. Hutto_Retail_Annexation_Zoning_Map
6. Hutto_Retail_Annexation_Future_Land_Use_Map
7. Hutto Limmer Retail 1295_Redacted

RESOLUTION NO. R-2026-XXX

A RESOLUTION OF THE CITY OF HUTTO, TEXAS, APPROVING A MUNICIPAL SERVICES AGREEMENT BETWEEN LIMMER CO 132 REAL ESTATE, LLC AND THE CITY OF HUTTO, TEXAS AND AUTHORIZING THE CITY MANAGER TO EXECUTE THE MUNICIPAL SERVICES AGREEMENT PROVIDING PROPER NOTICE & MEETING; AND PROVIDING AN EFFECTIVE DATE.

WHEREAS, the City of Hutto, Williamson County, Texas (the "City"), is a home rule city operating under the laws of its Charter and the State and Texas, by and through its duly elected City Council Members; and

WHEREAS, Limmer Co 132 Real Estate, LLC ("Owner") owns certain real property (the "Property") located in Williamson County, Texas that is currently within the extraterritorial jurisdiction of the City, such real property being more particularly described in **Attachment A**, Municipal Services Agreement, attached hereto for all purposes; and

WHEREAS, Section 43.0671 of the Local Government Code permits the City to annex an area of land if each owner within the area requests annexation; and

WHEREAS, Owner has voluntarily petitioned to the City to annex the Property into the municipal boundaries of the City pursuant to Subchapter C-3 of Chapter 43 of the Local Government Code and agrees that the application for annexation, serves as the Petition for Annexation; and

WHEREAS, Section 43.0672 of the Local Government Code requires the City Council of the City to negotiate and enter into a written agreement with the owners of the land for the provision of services in the area on or after the effective date of annexation ("Effective Date"); and

WHEREAS, the City and Owner desire to set out the City services to be provided for the Property on or after the effective date of annexation; and

WHEREAS, the requested annexation and the execution of this Municipal Services Agreement are subject to approval by the Hutto City Council.

NOW, THEREFORE, BE IT RESOLVED BY THE CITY COUNCIL OF THE CITY

OF HUTTO, TEXAS, THAT:

SECTION 1: The findings set forth in the recitals of this Resolution are hereby found to be true and correct and are hereby adopted as findings of the City Council and are incorporated into the body of this Resolution as if fully set forth herein.

SECTION 2: That the Hutto City Council hereby approves and authorizes the City Manager to execute the Municipal Services Agreement, **Exhibit A,** a copy of the same being attached hereto and incorporated herein for all purposes.

SECTION 3: The City Council hereby finds and declares that written notice of the date, hour, place and subject of the meeting at which this Resolution was adopted was posted and that such meeting was open to the public as required by law at all times during which this Resolution and the subject matter hereof were discussed, considered and formally acted upon, all as required by the Open Meetings Act, Chapter 551, Texas Government Code, as amended.

SECTION 4: This Resolution shall take effect immediately upon its passage.

PASSED AND APPROVED by the CITY COUNCIL of the CITY OF HUTTO, on the 2nd of July 2026, on a vote of ____ AYES; _____ NAYS; and _____ ABSTENTIONS.

(Remainder of page intentionally left blank.)

CITY OF HUTTO, TEXAS:

_____

Mike Snyder, Mayor

ATTEST:

_____

Laura Hallmark, City Secretary

EXHIBIT A
MUNICIPAL SERVICES AGREEMENT

MUNICIPAL SERVICES AGREEMENT
BETWEEN THE CITY OF HUTTO, TEXAS
AND LIMMER CO 132 REAL ESTATE, LLC

A total of 4.173 acres, more or less, of land, consisting of three (3) tracts; 1.24 acres out of the E. W. Frame Survey Abstract No. 798, 1.603 acres out of the Patrick O'Daugherty Survey Abstract No. 184, and 1.33 acres out of the Ryan E. Survey, in Williamson County, Texas.

This Municipal Services Agreement ("Agreement") is entered into on the 2nd day of July, 2026, by and between the City of Hutto, Texas, a home-rule municipality of the State of Texas ("City") and Limmer CO 132 Real Estate, LLC (referred to as the "Owner").

RECITALS

The parties agree that the following recitals are true and correct and form the basis upon which the parties have entered into this Agreement:

WHEREAS, Owner owns certain real property located in Williamson County, Texas that is currently within the extraterritorial jurisdiction of the City, such real property being more particularly depicted in **Exhibit A** attached hereto and fully incorporated into this Municipal Services Agreement and for all purposes referred to herein as the "Property"; and

WHEREAS, Section 43.0671 of the Local Government Code permits the City to annex an area if each owner of land in an area requests the annexation; and

WHEREAS, Owner has voluntarily petitioned the City to annex the Property into the municipal boundaries of the City pursuant to Subchapter C-3 of Chapter 43 of the Local Government Code and agrees that the application for annexation, serves as the Petition for Annexation; and

WHEREAS, Section 43.0672 of the Local Government Code requires the City Council of the City to negotiate and enter into a written agreement with the owners of the land for the provisions of services in the area on or after the effective date of annexation (the "Effective Date"); and

WHEREAS, City and Owner desire to set out the City services to be provided for the Property on or after the effective date of annexation; and

WHEREAS, the requested annexation and the execution of this Agreement are subject to approval by the Hutto City Council; and

NOW, THEREFORE, in exchange for the mutual covenants, conditions, and promises contained herein, City and Owner agree as follows:

1. PROPERTY. This Agreement is only applicable to the Property, as described and set forth in **Exhibit A**.

2. INTENT. It is the intent of the City that this Agreement provides for the delivery of full, available municipal services to the Property in accordance with state law, which may be accomplished through any means permitted by law.

3. MUNICIPAL SERVICES AS OF THE EFFECTIVE DATE OF ANNEXATION. Commencing on the Effective Date, the City will provide the municipal services to the Property as set forth below.

FIRE

Existing Services: Williamson County Emergency Service District #3

Services to be Provided:

Provides fire suppression and emergency services to the area. Primary fire response will be provided by Williamson County Emergency Service District #3, located at the following address: 501 Exchange Boulevard. Fire code inspections and enforcement will be handled by Williamson County Emergency Services District #3 on behalf of the City of Hutto.

POLICE

Existing Services: Williamson County Sheriff's Department

Services to be Provided:

Upon annexation, the City of Hutto Police Department will extend regular and routine patrols to the area. It is anticipated that the implementation of police patrol activities can be effectively accommodated within the current budget and staff appropriations.

BUILDING INSPECTION

Existing Services: None

Services to be Provided:

The Development Services Department will provide Building Inspection Services, and the Hutto Police Department will provide Code Enforcement Services upon annexation. The Development Services Department's role will include issuing building, electrical, and plumbing permits for any new construction and remodeling, and enforcing all other applicable codes that regulate building construction within the City of Hutto. Fire code inspections and enforcement will be handled by Williamson County Emergency Services District #3 on behalf of the City of Hutto.

PLANNING AND ZONING

Existing Services: Review of subdivision development plans under City's Subdivision Ordinance. No municipal zoning or land use controls except for those imposed by State Law.

Services to be Provided:
The Hutto Development Services Department has responsibility for regulating development and land use through the administration of the City of Hutto's Unified Development Code (UDC), and this will extend to the area on the effective date of the annexation. The property will also continue to be regulated under the requirements of the City of Hutto's Subdivision Chapter for the UDC. These services can be provided within the departments' current budgets.

LIBRARY
Existing Services: None

Services to be Provided:
City Library privileges will be available to future residents in this area, if any.

HEALTH DEPARTMENT - HEALTH CODE ENFORCEMENT SERVICE
Existing Services: Williamson Cities and County Health District

Services to be Provided:
Williamson Cities and County Health District will continue to implement enforcement of the health districts regulations on the effective date of annexation. Animal control services will also be provided to the area as needed by Hutto Animal Control Division of the Police Department.

STREET MAINTENANCE
Existing Services: Williamson County

Services to be Provided:
Maintenance and access to adjacent existing street facilities and/or future street facilities within public rights of way will be provided/overseen by appropriate City of Hutto departments.

STORM WATER MANAGEMENT
Existing Services: Williamson County Flood Plain Administrator

Services to be Provided
Developers will provide storm water drainage facilities as required of their development at their own expense, and such will be inspected by the City's engineers at time of completion. The City of Hutto will then maintain the drainage in public rights-of-way upon approval of the construction. Property owners and/or Home Owner's Associations or similar entities will maintain drainage facilities located on private property. All construction within the flood plain will be through the appropriate Hutto department(s) and will meet FEMA Flood Plain regulations.

STREET LIGHTING
Existing Services: Oncor Electric Delivery

Services to be Provided:

There are no existing street lights in this area. The Developer will be responsible for initial installation and maintenance of street lighting, if required, within the development until such time as any internal streets have been accepted by the City Council.

TRAFFIC ENGINEERING

Existing Services: None

Services to be Provided:

The City of Hutto, through its appropriate departments, will be able to provide any necessary additional traffic control devices after the effective date of annexation, if warranted, with an approved Traffic Impact Analysis.

SOLID WASTE SERVICES

Existing Services: None

Services to be Provided:

Solid waste collection shall be provided to the area of annexation in accordance with current ordinances. Service shall comply with existing City of Hutto policies, beginning with occupancy of structures.

PARKS AND TRAILS

Existing Service: None

Services to be Provided:

All City-operated parks and trail systems will be available to any future residents of this area upon annexation.

WATER SERVICES

Existing Service: None

Services to be Provided:

Water service for the property will be provided through connection to the City of Hutto's utility systems. Any required extensions of water infrastructure necessary to reach the property shall be the responsibility of the property owner and must be designed, constructed, and installed in accordance with all applicable City standards and regulations. The property owner must complete all required extensions before service can be initiated.

Once connected, ongoing operation, maintenance, and access to existing or future water facilities located within public rights-of-way will be provided or overseen by the appropriate City of Hutto departments.

WASTEWATER SERVICES

Existing Service: None

Services to be Provided:
Wastewater service for the property will be provided through connection to the City of Hutto's utility systems. Any required extensions of wastewater infrastructure necessary to reach the property shall be the responsibility of the property owner and must be designed, constructed, and installed in accordance with all applicable City standards and regulations. The property owner must complete all required extensions before service can be initiated.

Once connected, ongoing operation, maintenance, and access to existing or future wastewater facilities located within public rights-of-way will be provided or overseen by the appropriate City of Hutto departments.

.

4. SERVICE LEVEL. The City will provide the Property with a level of services, infrastructure, and infrastructure maintenance that is comparable to the level of services, infrastructure, and infrastructure maintenance available in other parts of the City with topography, land use, and population density similar to those reasonably contemplated or projected for the Property.

5. EXCLUDED SERVICES. It is understood and agreed that the City is not required to provide a service that is not included in this Agreement. However, City agrees to provide all services to the Property that the City uniformly provides to all other properties within the City limits

6. OWNER'S STIPULATIONS. The Owner agrees and stipulates that the application for annexation serves as the Owner's Petition for annexation for the voluntary annexation of Property into the boundaries of the City, and that the annexation of the Property is voluntary.

7. AUTHORITY. City and Owner represent that they have full power, authority, and legal right to execute, deliver and perform their obligations pursuant to this Agreement. Owner acknowledges that approval of the annexation is within the sole jurisdiction of the City Council. Nothing in this Agreement guarantees favorable decisions by the City Council.

8. SEVERABILITY. If any part, term, or provision of this Agreement is held by the courts to be illegal, invalid, or otherwise unenforceable, such illegality, invalidity, or unenforceability will not affect the validity of any other part, term or provision, and the rights of the parties will be construed as if the part, term, or provision was never part of the Agreement.

9. INTERPRETATION. The parties to this Agreement covenant and agree that in any litigation relating to this Agreement, the terms and conditions of the Agreement will be interpreted according to the laws of the State of Texas. The parties acknowledge that they are of equal bargaining power and that each of them was represented by legal counsel in the negotiation and drafting of this Agreement.

10. GOVERNING LAW AND VENUE. Venue shall be in the state courts located in Williamson County, Texas, and construed in conformity with the provisions of Texas Local Government Code Chapter 43.

11. NO WAIVER. The failure of either party to insist upon the performance of any term or

provision of this Agreement or to exercise any right granted hereunder shall not constitute a waiver of that party's right to insist upon appropriate performance or to assert any such right on any future occasion.

12. GOVERNMENTAL IMMUNITY; DEFENSES. Nothing in this Agreement shall be deemed to waive, modify, or amend any of City's governmental powers or immunities nor any legal defense in availability at law or in equity to City or Owner.

13. COUNTERPARTS. This Agreement may be executed in any number of counterparts, each of which shall be deemed an original and constitute one and the same instrument.

14. NOTICE. Any notice given under this Services must be in writing and may be given: (i) by depositing it in the United States mail, certified, with return receipt requested, addressed to the Party to be notified and with all charges prepaid; or (ii) by depositing it with a service guaranteeing "next day delivery", addressed to the Party to be notified and with all charges prepaid; or (iii) by personally delivering it to the Party, or any agent of the Party listed in this Services Agreement. Notice will be effective only when received. For purposes of notice, the addresses of the Parties will, until changed as provided below, be as follows:

If to Owner, to: Hwy 130 Mixed Use, LLC
Attn: Dharma Rajah
3040 Post Oak Blvd
Houston, Texas 77056

If to City, to: City of Hutto
Attn: James R. Earp
City Manager
500 W. Live Oak St.
Hutto, Texas 78634

The Parties may change their respective addresses to any other address within the United States of America by giving at least five (5) calendar days' written notice to the other Party. Any Party may, by giving at least five (5) calendar days' written notice to the City, designate additional persons or entities to receive copies of notices under this Services Agreement.

15. CAPTIONS. The captions to the various clauses of this Agreement are for informational purposes only and shall not alter the substance of the terms and conditions of this Agreement.

16. AGREEMENT BINDS AND BENEFITS SUCCESSORS AND RUNS WITH THE LAND. This Agreement is binding on and inures to the benefit of the parties, their successors, and assigns. The term of this Agreement constitutes covenants running with the land comprising the Property, is binding on the Owner and the City, and is enforceable by any current or future owner of any portion of the Property for the term of this Municipal Services Agreement. This Municipal Services Agreement will be recorded in the Official Public Records of Williamson County.

17. ENTIRE AGREEMENT. This Agreement constitutes the entire agreement between the

parties and supersedes all prior oral and written agreements between said parties. This Agreement shall not be amended unless executed in writing by both parties.

Executed as of the day and year first above written to be effective on the effective date of annexation of the Property.

CITY OF HUTTO, TEXAS

By: _____
James R. Earp, CPM
City Manager

Date: _____

STATE OF TEXAS §
§
COUNTY OF WILLIAMSON §

BEFORE ME, the undersigned authority, on this day personally appeared James Earp, known to me to be one of the persons whose names are subscribed to the preceding instrument; he acknowledged to me he is the duly authorized representative for the City of Hutto, Texas and he executed said instrument for the purposes and consideration therein expressed.

GIVEN UNDER MY HAND AND SEAL OF OFFICE this ___ day of _____, 2026.

_____
Notary Public in and for the State of Texas

[Owners' signatures on following pages.]

OWNER: LIMMER CO 132 REAL ESTATE, LLC

By: _____
Moiz Maknojia, Manager

Date: _____

STATE OF TEXAS §
§
COUNTY OF _____ §

BEFORE ME, the undersigned authority, on this day, personally appeared _____, known to me to be the person whose name is subscribed to the foregoing instrument, and acknowledged to me that he/she executed the same for the purposes and considerations therein expressed.

GIVEN UNDER MY HAND AND SEAL OF OFFICE this _____ day of _____, 2026.

_____
Notary Public in and for the State of Texas

EXHIBIT A
PROPERTY DESCRIPTION AND DEPICTION

MUNICIPAL SERVICES AGREEMENT
BETWEEN THE CITY OF HUTTO, TEXAS
AND LIMMER CO 132 REAL ESTATE, LLC

A total of 4.173 acres, more or less, of land, consisting of three (3) tracts; 1.24 acres out of the E. W. Frame Survey Abstract No. 798, 1.603 acres out of the Patrick O'Daugherty Survey Abstract No. 184, and 1.33 acres out of the Ryan E. Survey, in Williamson County, Texas.

This Municipal Services Agreement ("Agreement") is entered into on the 2nd day of July, 2026, by and between the City of Hutto, Texas, a home-rule municipality of the State of Texas ("City") and Limmer CO 132 Real Estate, LLC (referred to as the "Owner").

RECITALS

The parties agree that the following recitals are true and correct and form the basis upon which the parties have entered into this Agreement:

WHEREAS, Owner owns certain real property located in Williamson County, Texas that is currently within the extraterritorial jurisdiction of the City, such real property being more particularly depicted in **Exhibit A** attached hereto and fully incorporated into this Municipal Services Agreement and for all purposes referred to herein as the "Property"; and

WHEREAS, Section 43.0671 of the Local Government Code permits the City to annex an area if each owner of land in an area requests the annexation; and

WHEREAS, Owner has voluntarily petitioned the City to annex the Property into the municipal boundaries of the City pursuant to Subchapter C-3 of Chapter 43 of the Local Government Code and agrees that the application for annexation, serves as the Petition for Annexation; and

WHEREAS, Section 43.0672 of the Local Government Code requires the City Council of the City to negotiate and enter into a written agreement with the owners of the land for the provisions of services in the area on or after the effective date of annexation (the "Effective Date"); and

WHEREAS, City and Owner desire to set out the City services to be provided for the Property on or after the effective date of annexation; and

WHEREAS, the requested annexation and the execution of this Agreement are subject to approval by the Hutto City Council; and

NOW, THEREFORE, in exchange for the mutual covenants, conditions, and promises contained herein, City and Owner agree as follows:

1. **PROPERTY.** This Agreement is only applicable to the Property, as described and set forth in **Exhibit A**.

2. **INTENT.** It is the intent of the City that this Agreement provides for the delivery of full, available municipal services to the Property in accordance with state law, which may be accomplished through any means permitted by law.

3. **MUNICIPAL SERVICES AS OF THE EFFECTIVE DATE OF ANNEXATION.** Commencing on the Effective Date, the City will provide the municipal services to the Property as set forth below.

FIRE

Existing Services: Williamson County Emergency Service District #3

Services to be Provided:

Provides fire suppression and emergency services to the area. Primary fire response will be provided by Williamson County Emergency Service District #3, located at the following address: 501 Exchange Boulevard. Fire code inspections and enforcement will be handled by Williamson County Emergency Services District #3 on behalf of the City of Hutto.

POLICE

Existing Services: Williamson County Sheriff's Department

Services to be Provided:

Upon annexation, the City of Hutto Police Department will extend regular and routine patrols to the area. It is anticipated that the implementation of police patrol activities can be effectively accommodated within the current budget and staff appropriations.

BUILDING INSPECTION

Existing Services: None

Services to be Provided:

The Development Services Department will provide Building Inspection Services, and the Hutto Police Department will provide Code Enforcement Services upon annexation. The Development Services Department's role will include issuing building, electrical, and plumbing permits for any new construction and remodeling, and enforcing all other applicable codes that regulate building construction within the City of Hutto. Fire code inspections and enforcement will be handled by Williamson County Emergency Services District #3 on behalf of the City of Hutto.

PLANNING AND ZONING

Existing Services: Review of subdivision development plans under City's Subdivision Ordinance. No municipal zoning or land use controls except for those imposed by State Law.

Services to be Provided:
The Hutto Development Services Department has responsibility for regulating development and land use through the administration of the City of Hutto's Unified Development Code (UDC), and this will extend to the area on the effective date of the annexation. The property will also continue to be regulated under the requirements of the City of Hutto's Subdivision Chapter for the UDC. These services can be provided within the departments' current budgets.

LIBRARY

Existing Services: None

Services to be Provided:
City Library privileges will be available to future residents in this area, if any.

HEALTH DEPARTMENT - HEALTH CODE ENFORCEMENT SERVICE

Existing Services: Williamson Cities and County Health District

Services to be Provided:
Williamson Cities and County Health District will continue to implement enforcement of the health districts regulations on the effective date of annexation. Animal control services will also be provided to the area as needed by Hutto Animal Control Division of the Police Department.

STREET MAINTENANCE

Existing Services: Williamson County

Services to be Provided:
Maintenance and access to adjacent existing street facilities and/or future street facilities within public rights of way will be provided/overseen by appropriate City of Hutto departments.

STORM WATER MANAGEMENT

Existing Services: Williamson County Flood Plain Administrator

Services to be Provided
Developers will provide storm water drainage facilities as required of their development at their own expense, and such will be inspected by the City's engineers at time of completion. The City of Hutto will then maintain the drainage in public rights-of-way upon approval of the construction. Property owners and/or Home Owner's Associations or similar entities will maintain drainage facilities located on private property. All construction within the flood plain will be through the appropriate Hutto department(s) and will meet FEMA Flood Plain regulations.

STREET LIGHTING

Existing Services: Oncor Electric Delivery

Services to be Provided:

There are no existing street lights in this area. The Developer will be responsible for initial installation and maintenance of street lighting, if required, within the development until such time as any internal streets have been accepted by the City Council.

TRAFFIC ENGINEERING

Existing Services: None

Services to be Provided:

The City of Hutto, through its appropriate departments, will be able to provide any necessary additional traffic control devices after the effective date of annexation, if warranted, with an approved Traffic Impact Analysis.

SOLID WASTE SERVICES

Existing Services: None

Services to be Provided:

Solid waste collection shall be provided to the area of annexation in accordance with current ordinances. Service shall comply with existing City of Hutto policies, beginning with occupancy of structures.

PARKS AND TRAILS

Existing Service: None

Services to be Provided:

All City-operated parks and trail systems will be available to any future residents of this area upon annexation.

WATER SERVICES

Existing Service: None

Services to be Provided:

Water service for the property will be provided through connection to the City of Hutto's utility systems. Any required extensions of water infrastructure necessary to reach the property shall be the responsibility of the property owner and must be designed, constructed, and installed in accordance with all applicable City standards and regulations. The property owner must complete all required extensions before service can be initiated.

Once connected, ongoing operation, maintenance, and access to existing or future water facilities located within public rights-of-way will be provided or overseen by the appropriate City of Hutto departments.

WASTEWATER SERVICES

Existing Service: None

Services to be Provided:
Wastewater service for the property will be provided through connection to the City of Hutto's utility systems. Any required extensions of wastewater infrastructure necessary to reach the property shall be the responsibility of the property owner and must be designed, constructed, and installed in accordance with all applicable City standards and regulations. The property owner must complete all required extensions before service can be initiated.

Once connected, ongoing operation, maintenance, and access to existing or future wastewater facilities located within public rights-of-way will be provided or overseen by the appropriate City of Hutto departments.

4. **SERVICE LEVEL.** The City will provide the Property with a level of services, infrastructure, and infrastructure maintenance that is comparable to the level of services, infrastructure, and infrastructure maintenance available in other parts of the City with topography, land use, and population density similar to those reasonably contemplated or projected for the Property.

5. **EXCLUDED SERVICES.** It is understood and agreed that the City is not required to provide a service that is not included in this Agreement. However, City agrees to provide all services to the Property that the City uniformly provides to all other properties within the City limits

6. **OWNER'S STIPULATIONS.** The Owner agrees and stipulates that the application for annexation serves as the Owner's Petition for annexation for the voluntary annexation of Property into the boundaries of the City, and that the annexation of the Property is voluntary.

7. **AUTHORITY.** City and Owner represent that they have full power, authority, and legal right to execute, deliver and perform their obligations pursuant to this Agreement. Owner acknowledges that approval of the annexation is within the sole jurisdiction of the City Council. Nothing in this Agreement guarantees favorable decisions by the City Council.

8. **SEVERABILITY.** If any part, term, or provision of this Agreement is held by the courts to be illegal, invalid, or otherwise unenforceable, such illegality, invalidity, or unenforceability will not affect the validity of any other part, term or provision, and the rights of the parties will be construed as if the part, term, or provision was never part of the Agreement.

9. **INTERPRETATION.** The parties to this Agreement covenant and agree that in any litigation relating to this Agreement, the terms and conditions of the Agreement will be interpreted according to the laws of the State of Texas. The parties acknowledge that they are of equal bargaining power and that each of them was represented by legal counsel in the negotiation and drafting of this Agreement.

10. **GOVERNING LAW AND VENUE.** Venue shall be in the state courts located in Williamson County, Texas, and construed in conformity with the provisions of Texas Local Government Code Chapter 43.

11. **NO WAIVER.** The failure of either party to insist upon the performance of any term or

provision of this Agreement or to exercise any right granted hereunder shall not constitute a waiver of that party's right to insist upon appropriate performance or to assert any such right on any future occasion.

12. GOVERNMENTAL IMMUNITY; DEFENSES. Nothing in this Agreement shall be deemed to waive, modify, or amend any of City's governmental powers or immunities nor any legal defense in availability at law or in equity to City or Owner.

13. COUNTERPARTS. This Agreement may be executed in any number of counterparts, each of which shall be deemed an original and constitute one and the same instrument.

14. NOTICE. Any notice given under this Services must be in writing and may be given: (i) by depositing it in the United States mail, certified, with return receipt requested, addressed to the Party to be notified and with all charges prepaid; or (ii) by depositing it with a service guaranteeing "next day delivery", addressed to the Party to be notified and with all charges prepaid; or (iii) by personally delivering it to the Party, or any agent of the Party listed in this Services Agreement. Notice will be effective only when received. For purposes of notice, the addresses of the Parties will, until changed as provided below, be as follows:

If to Owner, to: Hwy 130 Mixed Use, LLC
Attn: Dharma Rajah
3040 Post Oak Blvd
Houston, Texas 77056

If to City, to: City of Hutto
Attn: James R. Earp
City Manager
500 W. Live Oak St.
Hutto, Texas 78634

The Parties may change their respective addresses to any other address within the United States of America by giving at least five (5) calendar days' written notice to the other Party. Any Party may, by giving at least five (5) calendar days' written notice to the City, designate additional persons or entities to receive copies of notices under this Services Agreement.

15. CAPTIONS. The captions to the various clauses of this Agreement are for informational purposes only and shall not alter the substance of the terms and conditions of this Agreement.

16. AGREEMENT BINDS AND BENEFITS SUCCESSORS AND RUNS WITH THE LAND. This Agreement is binding on and inures to the benefit of the parties, their successors, and assigns. The term of this Agreement constitutes covenants running with the land comprising the Property, is binding on the Owner and the City, and is enforceable by any current or future owner of any portion of the Property for the term of this Municipal Services Agreement. This Municipal Services Agreement will be recorded in the Official Public Records of Williamson County.

17. ENTIRE AGREEMENT. This Agreement constitutes the entire agreement between the

parties and supersedes all prior oral and written agreements between said parties. This Agreement shall not be amended unless executed in writing by both parties.

Executed as of the day and year first above written to be effective on the effective date of annexation of the Property.

CITY OF HUTTO, TEXAS

By: _____
James R. Earp, CPM
City Manager

Date: _____

STATE OF TEXAS §
§
COUNTY OF WILLIAMSON §

BEFORE ME, the undersigned authority, on this day personally appeared James Earp, known to me to be one of the persons whose names are subscribed to the preceding instrument; he acknowledged to me he is the duly authorized representative for the City of Hutto, Texas and he executed said instrument for the purposes and consideration therein expressed.

GIVEN UNDER MY HAND AND SEAL OF OFFICE this ___ day of _____, 2026.

_____
Notary Public in and for the State of Texas

[Owners' signatures on following pages.]

OWNER: LIMMER CO 132 REAL ESTATE, LLC

By: _____
Moiz Maknojia, Manager

Date: 8/26/26

STATE OF TEXAS §
§
COUNTY OF Williamson §

BEFORE ME, the undersigned authority, on this day, personally appeared Moiz Maknojia, known to me to be the person whose name is subscribed to the foregoing instrument, and acknowledged to me that he/she executed the same for the purposes and considerations therein expressed.

GIVEN UNDER MY HAND AND SEAL OF OFFICE this 26th day of August, 2026.

_____
Notary Public in and for the State of Texas

RAINIS ALFONSO WONG
My Notary ID # 134036835
Expires October 27, 2026

EXHIBIT A
PROPERTY DESCRIPTION AND DEPICTION

Donnie Boerner Surveying Company L.P.
20 GEL Ranch Road ♦ Comfort, Texas 78013
Phone: 830-377-2492
FIRM NO. 10193963

Field Notes for a 4.173 Acre Tract of Land

Being a 4.173 acre tract out of the O.R. Frame Survey, Abstract No. 798 and the Patrick O'Daugherty Survey, Abstract No. 184, Williamson County, Texas and being that certain 4.173 acre tract conveyed to Limmer Co 132 Real Estate LLC, a Texas limited liability company by deed recorded in Document No. 2023027430, Official Public Records, Williamson County, Texas, said 4.173 acre tract being more particularly described by metes and bounds as follows:

Beginning at a ½" steel rod found in the southeast right-of-way line of County Road 132 for the southwest corner of the herein described tract, the northwest corner of Singh Subdivision recorded in Document No. 2018046065, Official Public Records, Williamson County, Texas;

Thence, with the southeast right-of-way line of County Road 132, North 07 degrees 45 minutes 41 seconds East, a distance of 243.07 feet to a steel rod found with a red plastic cap at the beginning of a cut-back from the southeast right-of-way line of County Road 132 to the southwest right-of-way line of Limmer Loop;

Thence, along said cut-back line, North 54 degrees 34 minutes 33 seconds East, a distance of 68.01 feet to a steel rod found with a red "CAPITAL SURVEYING CO INC" plastic cap for the northwest corner of the herein described tract;

Thence, with the southwest right-of-way line of Limmer Loop, South 77 degrees 55 minutes 08 seconds East, a distance of 264.32 feet to a ½" steel rod found at the beginning of a non-tangent curve to the right whose central angle is 18 degrees 32 minutes 20 seconds, whose radius is 1355.00 feet and whose chord bears, South 68 degrees 45 minutes 16 seconds East, a distance of 436.52 feet;

Thence, continuing with the southwest right-of-way line of Limmer Loop, along the arc of said curve to the right, a distance of 438.43 feet to a ½" steel rod found at the beginning of a cutback from the southwest right-of-way line of Limmer Loop to the northwest right-of-way line of Mager Lane;

Thence, along said cutback line, South 12 degrees 38 minutes 09 seconds East, a distance of 68.57 feet to a ½" steel rod found at the beginning of a curve to the right whose central angle is 06 degrees 38 minutes 09 seconds, whose radius is 955.00 feet and whose chord bears, South 39 degrees 12 minutes 12 seconds West, a distance of 110.54 feet;

Thence, with the northwest right-of-way line of Mager Lane, along the arc of said curve to the right, a distance of 110.60 feet to a ½" steel rod found for the southeast corner of the herein described tract, the northeast corner of the aforementioned Singh Subdivision;

Thence, departing the northwest right-of-way line of Mager Lane, with the northeast line of Singh Subdivision, North 82 degrees 59 minutes 53 seconds West, a distance of 703.94 feet to the **Place of Beginning** and containing 4.173 acres of land.

Note: A survey plat of the above described tract was prepared. Basis of bearing was established from the State Plane Coordinate System North American Datum of 1983, Texas Central Zone.

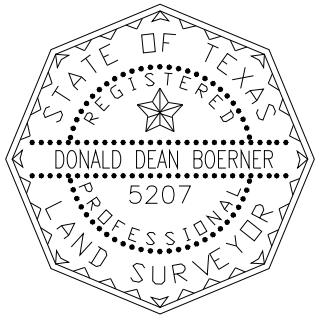

Donald Dean Boerner
Registered Professional Land Surveyor No. 5207

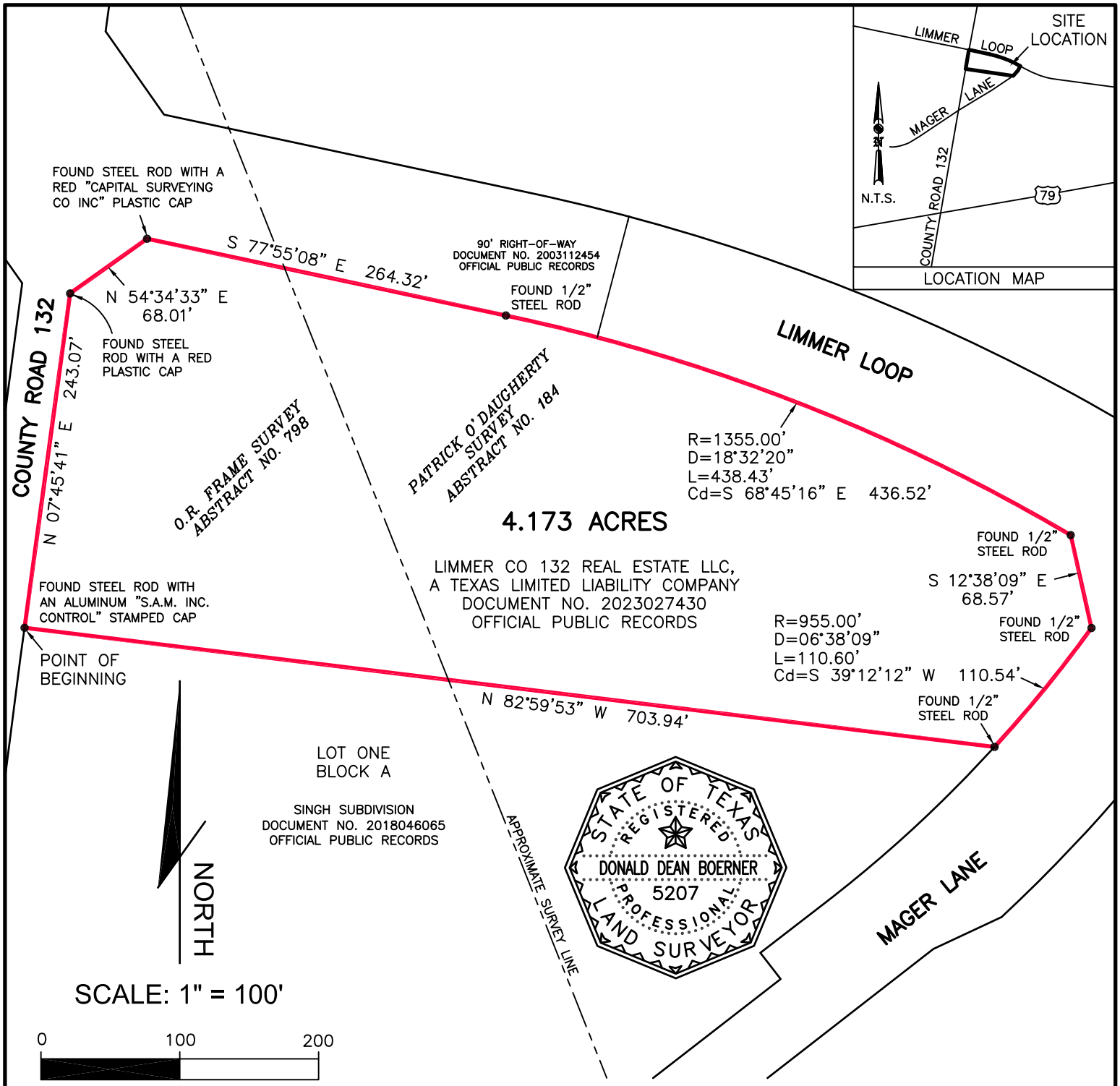

PLAT SHOWING: A 4.173 acre tract out of the O.R. Frame Survey, Abstract No. 798 and the Patrick O'Daugherty Survey, Abstract No. 184, Williamson County, Texas and being that certain 4.173 acre tract conveyed to Limmer Co 132 Real Estate LLC, a Texas limited liability company by deed recorded in Document No. 2023027430, Official Public Records, Williamson County, Texas.

GENERAL NOTES:

1) BASIS OF BEARING WAS ESTABLISHED FROM THE STATE PLANE COORDINATE SYSTEM, NORTH AMERICAN DATUM OF 1983, TEXAS CENTRAL ZONE.

2) A FIELD NOTE DESCRIPTION WAS PREPARED FOR THIS TRACT.

I HEREBY CERTIFY THAT THIS SURVEY WAS MADE ON THE GROUND, THAT THIS PLAT CORRECTLY REPRESENTS THE FACTS FOUND AT THE TIME OF THIS SURVEY.

DONNIE BOERNER SURVEYING COMPANY L.P.
20 GEL RANCH ROAD
COMFORT, TEXAS 78013
PH: 830-377-2492

FIRM NO. 10193963

DONALD DEAN BOERNER
REGISTERED PROFESSIONAL LAND SURVEYOR NO. 5207

DATE 04-04-2026

JOB NO: 24-245

Hutto Retail Annexation

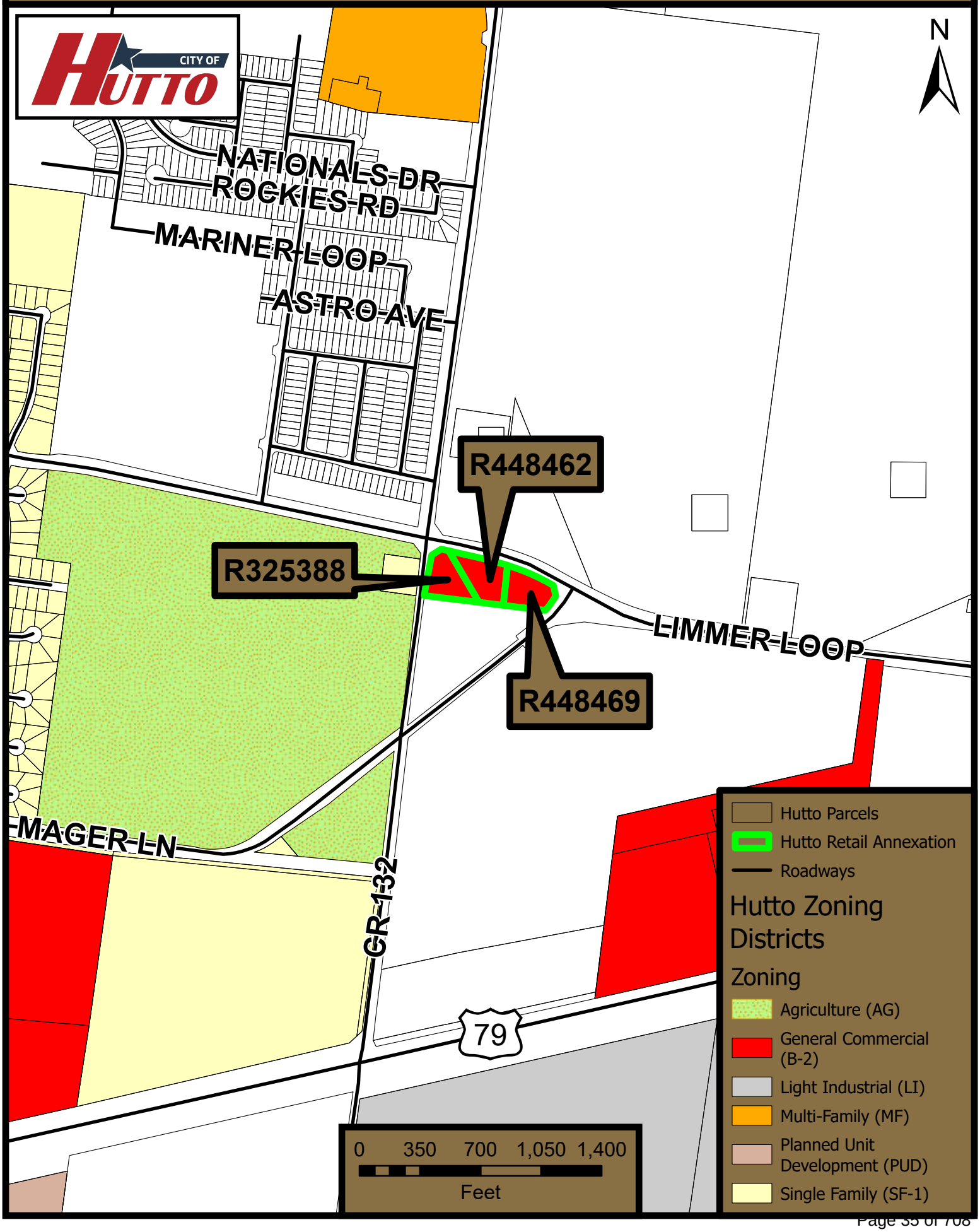

Hutto Retail Annexation

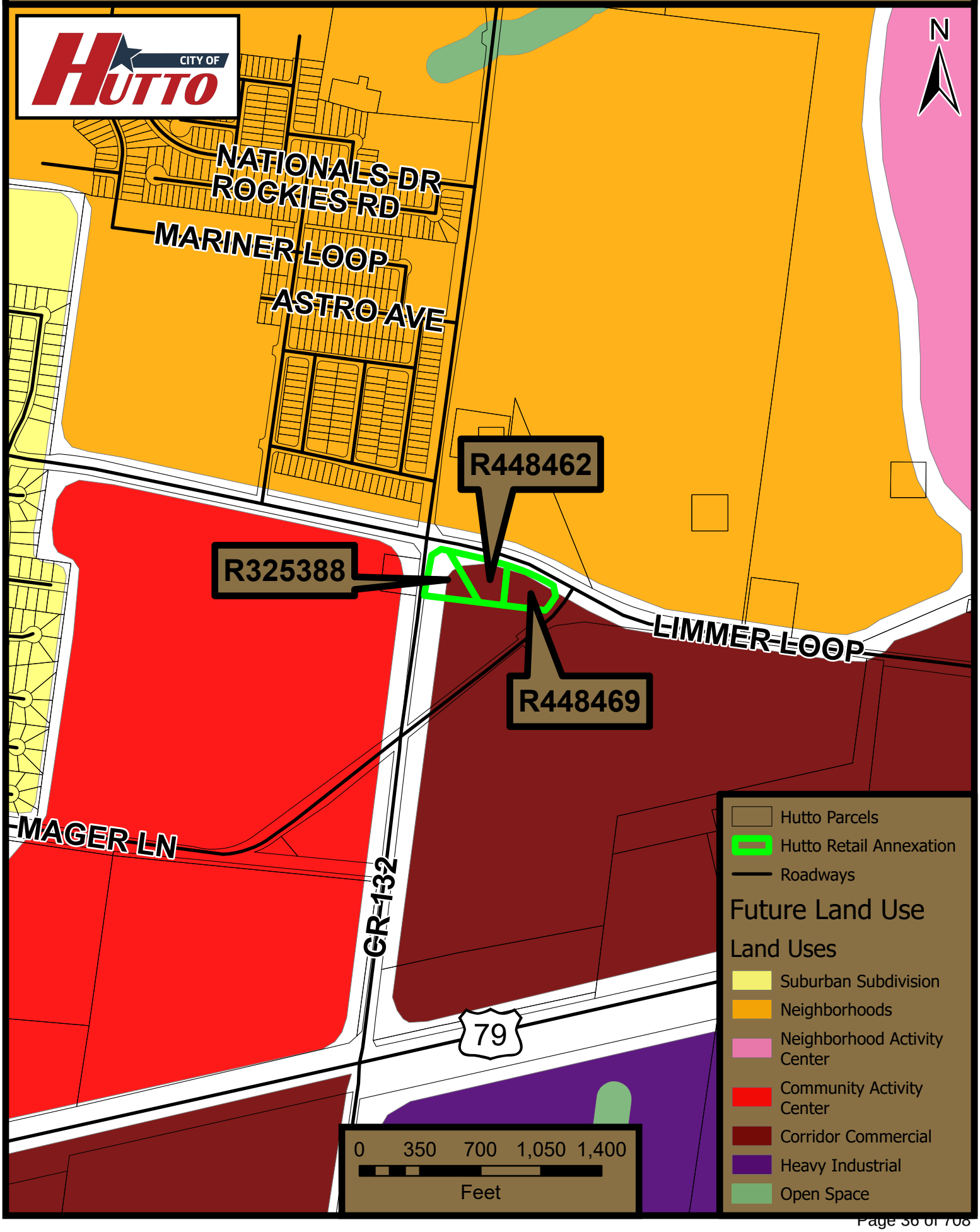

CERTIFICATE OF INTERESTED PARTIES

FORM 1295

Complete Nos. 1 - 4 and 6 if there are interested parties.
Complete Nos. 1, 2, 3, 5, and 6 if there are no interested parties.

OFFICE USE ONLY
CERTIFICATION OF FILING

Certificate Number:
2026-1509147

Date Filed:
08/28/2026

Date Acknowledged:

1 Name of business entity filing form, and the city, state and country of the business entity's place of business.

HUTTO LIMMER RETAIL
HUTTO, TX United States

2 Name of governmental entity or state agency that is a party to the contract for which the form is being filed.

City Of Hutto

3 Provide the identification number used by the governmental entity or state agency to track or identify the contract, and provide a description of the services, goods, or other property to be provided under the contract.

8/28/2026
HUTTO LIMMER RETAIL

4 Name of Interested Party	City, State, Country (place of business)	Nature of interest (check applicable)	
		Controlling	Intermediary
Maknojia, Moiz	Austin, TX United States	X	X

5 Check only if there is NO Interested Party. ☐

6 UNSWORN DECLARATION

My name is Moiz Maknojia, and my date of birth is [redacted].

My address is 4406 Logan Ridge Dr, Cedar Park (city), TX (state), 78613 (zip code), USA (country).

I declare under penalty of perjury that the foregoing is true and correct.

Executed in Williamson County, State of Texas, on the 28 day of August (month), 2026 (year).

Moiz

Signature of authorized agent of contracting business entity
(Declarant)

AGENDA ITEM REPORT
9.2.

To:	City Council
Subject:	Conduct a public hearing and possible action on Ordinance No. O-2026-043 approving the Annexation of the Hutto Limmer Retail Annexation tract, 4.173 acres, more or less, of land located at the south-east corner of Limmer Loop and CR 132 and the south-west corner of Limmer Loop and Mager Lane and to Establish the Base Zoning of B-2 (General Commercial) zoning district. (Howard Koontz)
Meeting:	Thursday, September 3, 2026
Department:	Development Services /
Staff Contact:	Howard Koontz

ITEM SUMMARY:

This is a voluntary annexation request for three separate tracts with legal descriptions: AW0798 - E. W. Frame Survey Abstract No. 798 (1.24 acres), AW0184 - Patrick O'Daugherty Survey Abstract No. 184 (1.603 acres), and AW0542 - Ryan E. Survey (1.33 acres). The annexation request is for a total of 4.173 acres, the tracts are contiguous to the current City Limits. This site is undeveloped and located within the City's extraterritorial jurisdiction (ETJ), and is being presented to City Council for approval along with setting the base zoning as B-2 (General Commercial) which is in compliance with the City's Future Land Use Map (Corridor Commercial), as required by state law and the 2040 Soar - Comprehensive Plan.

Surrounding Existing Uses:

- North: Undeveloped ETJ
- South: Developed ETJ
- East: ROW and Undeveloped ETJ
- West: Single Family (SF-1)

STAFF RECOMMENDATION:

Staff recommends the City Council **approve this petition** for annexation and the simultaneous assignment of B-2 Zoning, as presented herein.

FISCAL NOTES:

The tract is currently in the ETJ. After annexation through the municipal services agreement, the City will collect water and wastewater utility fees and property taxes.

AGENDA ITEM REPORT
9.2.

ATTACHMENTS:

1. Ordinance No. O-2026-XXX
2. Exhibit A: Legal Description & Survey
3. Exhibit A Municipal Services Agreement
4. LOI
5. Warranty Deed
6. SER
7. Hutto_Retail_Annexation_Future_Land_Use_Map
8. Hutto_Retail_Annexation_Zoning_Map

ORDINANCE NO. O-2026-XX

AN ORDINANCE ANNEXING CERTAIN HEREINAFTER DESCRIBED ADJACENT AND CONTIGUOUS TERRITORY TO THE CITY OF HUTTO, WILLIAMSON COUNTY, TEXAS, TO WIT: 4.173 ACRES, MORE OR LESS, OF LAND, LOCATED AT THE SOUTH-EAST CORNER OF LIMMER LOOP AND CR 132 AND THE SOUTH-WEST CORNER OF LIMMER LOOP AND MAGER LANE, DESCRIBED IN EXHIBIT "A", ALL OF SAID PROPERTY BEING SITUATED IN WILLIAMSON COUNTY, TEXAS, AND ALL ADJACENT ROADWAYS BEING FOR ANNEXATION; EXTENDING THE BOUNDARY LIMITS OF HUTTO SO AS TO INCLUDE SAID PROPERTY WITHIN HUTTO'S CITY LIMITS; FINDING THAT ALL NECESSARY AND REQUIRED LEGAL CONDITIONS HAVE BEEN SATISFIED; PROVIDING THAT SUCH PROPERTY SHALL BECOME A PART OF THE CITY OF HUTTO AND THAT THE OWNERS AND INHABITANTS THEREOF SHALL BE ENTITLED TO THE RIGHTS AND PRIVILEGES OF OTHER CITIZENS AND BE BOUND BY THE ACTS, ORDINANCES, RESOLUTIONS AND REGULATIONS OF THE CITY NOW IN EFFECT AND THOSE WHICH ARE HEREINAFTER ADOPTED; PROVIDING FINDINGS OF FACT, ENACTMENT, PUBLICATION, PROPER NOTICE AND MEETING, REPEALER, SEVERABILITY, AND AN EFFECTIVE DATE.

WHEREAS, the City of Hutto, Texas (the "City"), is a duly constituted home-rule municipality and, as such, is authorized to annex territory subject to the laws of the State of Texas and subject to its Charter; and

WHEREAS, Limmer Co 132 Real Estate LLC, a Texas limited liability company (the "Owner"), the owners of the tracts of land containing 4.173 acres, more or less, of land in the extraterritorial jurisdiction ("ETJ") of the City, located at the south-east corner of Limmer loop and CR 132 and the south-west corner of Limmer loop and Mager lane, in Williamson County, Texas (the "Property"), and being more particularly described in **Exhibit "A"**, attached hereto and made part hereof by reference for all purposes, have petitioned the City Council in writing to annex the Property; and

WHEREAS, the procedures prescribed by the Charter of the City of Hutto, the City of Hutto Unified Development Code ("UDC"), and the applicable laws of the State of Texas have been duly followed with respect to the Property; and

WHEREAS, pursuant to Section 43.0672, Texas Local Government Code, the City and the owners of the land have negotiated to enter into the municipal services agreement, a copy of which is attached as **Exhibit "B"**, for provision of services in the area to be annexed, and such agreement lists each service the City will provide on the effective date of the annexation and includes a schedule that includes the period within which the City will provide each service that is not provided on the effective date of the annexation; and

WHEREAS, after considering the public testimony received at each hearing, the City Council of the City of Hutto determines that the annexation and initial zoning requests for the Property are proper in all respects, the requests are consistent with the comprehensive plan and community, neighborhood and other applicable land use and development plans, the Property is in the City's ETJ, the Property does not currently have any UDC or Williamson County code violations, the annexation request conforms to state law, and approving the annexation and initial zoning requests is in the best interests of the community and its citizens; and

WHEREAS, and every requirement set forth in Chapter 211, Sub-Chapter A, Texas Local Government Code, concerning public notices, hearings, and other procedural matters has been fully complied with; and

WHEREAS, the City finds that the designation of the zoning for the Property as B-2 (General Commercial) is in accordance with the City's Comprehensive Plan and the Future Land Use Map for the area; and

WHEREAS, the City Council of the City of Hutto determines that the Property for annexation which is more fully described in **Exhibit "A"** should become annexed.

NOW, THEREFORE, BE IT ORDAINED BY THE CITY COUNCIL OF THE CITY OF HUTTO, TEXAS:

SECTION 1. FINDINGS OF FACT. All of the above recitations are found to be true and correct and are incorporated into the body of this Ordinance.

SECTION 2. ENACTMENT. The Property described in the attached Exhibit "A", together with adjacent roadways, be and is hereby annexed and brought within the

corporate city limits of the City of Hutto, Texas, and the same is hereby made an integral part hereof; and that the boundary limits of the City of Hutto by the same are hereby extended to include the above described territory within the city limits of the City of Hutto, and the same shall hereinafter be included within the territorial limits of the City of Hutto, Texas and designated as B-2 (General Commercial) Zoning Districts.

SECTION 3 ANNEXATION RIGHTS AND PRIVILEGES. Upon annexation the Property and its residents and future residents are hereby and shall be entitled to all rights and privileges of other citizens of the City of Hutto and are hereby and shall be bound by all acts, ordinances, resolutions and regulations of the City, and all other legal actions now in full force and effect and all those which may be hereafter adopted by the City. The Property shall be used only in the manner and for the purposes provided for by the Hutto Unified Development Code and the Hutto City Code, as may be amended, and violations of this Ordinance may be enforced as allowed by state law, the Hutto Unified Development Code and the Hutto City Code, as may be amended.

SECTION 4 AUTHORIZATION. The appropriate City official of the City of Hutto is hereby directed and authorized to perform or cause to be performed as required by law all acts necessary to correct the official maps and boundaries of the City of Hutto so as to include the aforementioned territory hereby annexed as part of the City of Hutto, Texas, designated as B-2 (General Commercial) Zoning Districts.

SECTION 5 CITY SECRETARY AUTHORIZATION. The City Secretary is hereby directed and authorized to:

A. file a certified copy of this Ordinance in the Office of the County Clerk of Williamson County, Texas;

B. send by United States registered or certified mail to the Texas Comptroller of the Public Accounts a certified copy of this Ordinance and a map clearly showing the added territory; and

C. to notify the Williamson County Appraisal District Office of the new City boundaries within 30 days of effective date of this Ordinance.

SECTION 6. PUBLICATION CLAUSE. The City Secretary shall publish this ordinance on the City's website and shall publish the adoption of this ordinance by the City Council which shall be published in the approved City Council minutes as required by Hutto City Charter Section 3.13.

SECTION 7. OPEN MEETING COMPLIANCE. The City Council hereby finds and declares that written notice of the date, hour, place, and subject of the meeting at which this Ordinance was adopted was posted and that such meeting was open to the public as required

by law at all times during which this ordinance and the subject hereof were discussed, considered, and formerly acted upon, all as required by the Open Meetings Act, Chapter 551, Texas Government Code, as amended.

SECTION 8. REPEALING CLAUSE. All ordinances and resolutions and parts thereof in conflict herewith are hereby expressly repealed insofar as they conflict.

SECTION 9. SEVERABILITY CLAUSE. Should any part, portion, section or provision of this ordinance be declared to be invalid or inoperative or void for any reason by a court of competent jurisdiction, such decision, opinion or judgement shall in no way affect the remaining parts, provisions, sections of this ordinance which provisions shall remain and continue to be in full force and effect.

SECTION 10. EFFECTIVE DATE. Pursuant to Section 3.13 of the Hutto City Charter and Section this Ordinance is adopted and enacted upon by four votes of the City Council and shall be published as required by law.

READ, PASSED, and **APPROVED** on the reading this the **2nd** day of **July, 2026,** at a meeting of the Hutto, Texas City Council, there being a quorum present, on a vote of _____ AYES; _____ NAYS; and _____ ABSTENTIONS.

(Remainder of page intentionally left blank.)

CITY OF HUTTO, TEXAS:

_____

Mike Snyder, Mayor

ATTEST:

_____

Laura Hallmark, City Secretary

EXHIBIT A

SURVEY
(including legal property description)

EXHIBIT B

MUNICIPAL SERVICES AGREEMENT

Donnie Boerner Surveying Company L.P.
20 GEL Ranch Road ♦ Comfort, Texas 78013
Phone: 830-377-2492
FIRM NO. 10193963

Field Notes for a 4.173 Acre Tract of Land

Being a 4.173 acre tract out of the O.R. Frame Survey, Abstract No. 798 and the Patrick O'Daugherty Survey, Abstract No. 184, Williamson County, Texas and being that certain 4.173 acre tract conveyed to Limmer Co 132 Real Estate LLC, a Texas limited liability company by deed recorded in Document No. 2023027430, Official Public Records, Williamson County, Texas, said 4.173 acre tract being more particularly described by metes and bounds as follows:

Beginning at a ½" steel rod found in the southeast right-of-way line of County Road 132 for the southwest corner of the herein described tract, the northwest corner of Singh Subdivision recorded in Document No. 2018046065, Official Public Records, Williamson County, Texas;

Thence, with the southeast right-of-way line of County Road 132, North 07 degrees 45 minutes 41 seconds East, a distance of 243.07 feet to a steel rod found with a red plastic cap at the beginning of a cut-back from the southeast right-of-way line of County Road 132 to the southwest right-of-way line of Limmer Loop;

Thence, along said cut-back line, North 54 degrees 34 minutes 33 seconds East, a distance of 68.01 feet to a steel rod found with a red "CAPITAL SURVEYING CO INC" plastic cap for the northwest corner of the herein described tract;

Thence, with the southwest right-of-way line of Limmer Loop, South 77 degrees 55 minutes 08 seconds East, a distance of 264.32 feet to a ½" steel rod found at the beginning of a non-tangent curve to the right whose central angle is 18 degrees 32 minutes 20 seconds, whose radius is 1355.00 feet and whose chord bears, South 68 degrees 45 minutes 16 seconds East, a distance of 436.52 feet;

Thence, continuing with the southwest right-of-way line of Limmer Loop, along the arc of said curve to the right, a distance of 438.43 feet to a ½" steel rod found at the beginning of a cutback from the southwest right-of-way line of Limmer Loop to the northwest right-of-way line of Mager Lane;

Thence, along said cutback line, South 12 degrees 38 minutes 09 seconds East, a distance of 68.57 feet to a ½" steel rod found at the beginning of a curve to the right whose central angle is 06 degrees 38 minutes 09 seconds, whose radius is 955.00 feet and whose chord bears, South 39 degrees 12 minutes 12 seconds West, a distance of 110.54 feet;

Thence, with the northwest right-of-way line of Mager Lane, along the arc of said curve to the right, a distance of 110.60 feet to a ½" steel rod found for the southeast corner of the herein described tract, the northeast corner of the aforementioned Singh Subdivision;

Thence, departing the northwest right-of-way line of Mager Lane, with the northeast line of Singh Subdivision, North 82 degrees 59 minutes 53 seconds West, a distance of 703.94 feet to the **Place of Beginning** and containing 4.173 acres of land.

Note: A survey plat of the above described tract was prepared. Basis of bearing was established from the State Plane Coordinate System North American Datum of 1983, Texas Central Zone.

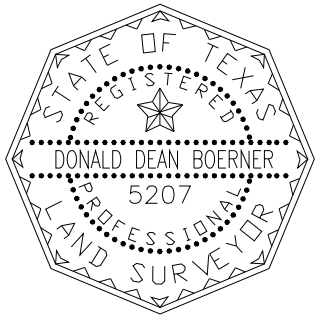

Donald Dean Boerner
Registered Professional Land Surveyor No. 5207

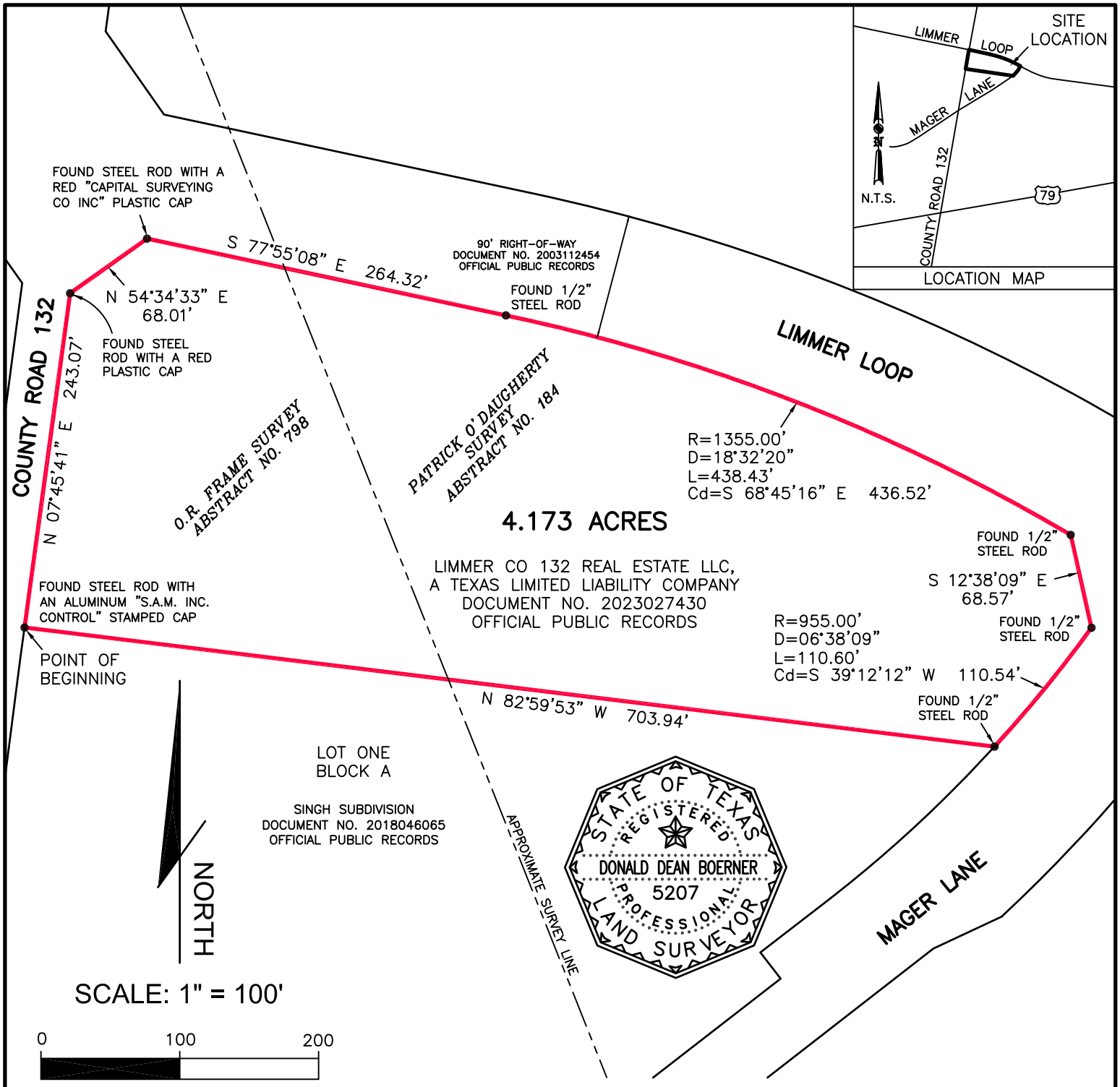

PLAT SHOWING: A 4.173 acre tract out of the O.R. Frame Survey, Abstract No. 798 and the Patrick O'Daugherty Survey, Abstract No. 184, Williamson County, Texas and being that certain 4.173 acre tract conveyed to Limmer Co 132 Real Estate LLC, a Texas limited liability company by deed recorded in Document No. 2023027430, Official Public Records, Williamson County, Texas.

GENERAL NOTES:

1) BASIS OF BEARING WAS ESTABLISHED FROM THE STATE PLANE COORDINATE SYSTEM, NORTH AMERICAN DATUM OF 1983, TEXAS CENTRAL ZONE.

2) A FIELD NOTE DESCRIPTION WAS PREPARED FOR THIS TRACT.

I HEREBY CERTIFY THAT THIS SURVEY WAS MADE ON THE GROUND, THAT THIS PLAT CORRECTLY REPRESENTS THE FACTS FOUND AT THE TIME OF THIS SURVEY.

DONNIE BOERNER SURVEYING COMPANY L.P.
20 GEL RANCH ROAD
COMFORT, TEXAS 78013
PH: 830-377-2492

FIRM NO. 10193963

DONALD DEAN BOERNER
REGISTERED PROFESSIONAL LAND SURVEYOR NO. 5207

DATE 04-04-2026

JOB NO: 24-245

MUNICIPAL SERVICES AGREEMENT
BETWEEN THE CITY OF HUTTO, TEXAS
AND LIMMER CO 132 REAL ESTATE, LLC

A total of 4.173 acres, more or less, of land, consisting of three (3) tracts; 1.24 acres out of the E. W. Frame Survey Abstract No. 798, 1.603 acres out of the Patrick O'Daugherty Survey Abstract No. 184, and 1.33 acres out of the Ryan E. Survey, in Williamson County, Texas.

This Municipal Services Agreement ("Agreement") is entered into on the 2nd day of July, 2026, by and between the City of Hutto, Texas, a home-rule municipality of the State of Texas ("City") and Limmer CO 132 Real Estate, LLC (referred to as the "Owner").

RECITALS

The parties agree that the following recitals are true and correct and form the basis upon which the parties have entered into this Agreement:

WHEREAS, Owner owns certain real property located in Williamson County, Texas that is currently within the extraterritorial jurisdiction of the City, such real property being more particularly depicted in **Exhibit A** attached hereto and fully incorporated into this Municipal Services Agreement and for all purposes referred to herein as the "Property"; and

WHEREAS, Section 43.0671 of the Local Government Code permits the City to annex an area if each owner of land in an area requests the annexation; and

WHEREAS, Owner has voluntarily petitioned the City to annex the Property into the municipal boundaries of the City pursuant to Subchapter C-3 of Chapter 43 of the Local Government Code and agrees that the application for annexation, serves as the Petition for Annexation; and

WHEREAS, Section 43.0672 of the Local Government Code requires the City Council of the City to negotiate and enter into a written agreement with the owners of the land for the provisions of services in the area on or after the effective date of annexation (the "Effective Date"); and

WHEREAS, City and Owner desire to set out the City services to be provided for the Property on or after the effective date of annexation; and

WHEREAS, the requested annexation and the execution of this Agreement are subject to approval by the Hutto City Council; and

NOW, THEREFORE, in exchange for the mutual covenants, conditions, and promises contained herein, City and Owner agree as follows:

1. PROPERTY. This Agreement is only applicable to the Property, as described and set forth in **Exhibit A**.

2. INTENT. It is the intent of the City that this Agreement provides for the delivery of full, available municipal services to the Property in accordance with state law, which may be accomplished through any means permitted by law.

3. MUNICIPAL SERVICES AS OF THE EFFECTIVE DATE OF ANNEXATION. Commencing on the Effective Date, the City will provide the municipal services to the Property as set forth below.

FIRE

Existing Services: Williamson County Emergency Service District #3

Services to be Provided:

Provides fire suppression and emergency services to the area. Primary fire response will be provided by Williamson County Emergency Service District #3, located at the following address: 501 Exchange Boulevard. Fire code inspections and enforcement will be handled by Williamson County Emergency Services District #3 on behalf of the City of Hutto.

POLICE

Existing Services: Williamson County Sheriff's Department

Services to be Provided:

Upon annexation, the City of Hutto Police Department will extend regular and routine patrols to the area. It is anticipated that the implementation of police patrol activities can be effectively accommodated within the current budget and staff appropriations.

BUILDING INSPECTION

Existing Services: None

Services to be Provided:

The Development Services Department will provide Building Inspection Services, and the Hutto Police Department will provide Code Enforcement Services upon annexation. The Development Services Department's role will include issuing building, electrical, and plumbing permits for any new construction and remodeling, and enforcing all other applicable codes that regulate building construction within the City of Hutto. Fire code inspections and enforcement will be handled by Williamson County Emergency Services District #3 on behalf of the City of Hutto.

PLANNING AND ZONING

Existing Services: Review of subdivision development plans under City's Subdivision Ordinance. No municipal zoning or land use controls except for those imposed by State Law.

Services to be Provided:
The Hutto Development Services Department has responsibility for regulating development and land use through the administration of the City of Hutto's Unified Development Code (UDC), and this will extend to the area on the effective date of the annexation. The property will also continue to be regulated under the requirements of the City of Hutto's Subdivision Chapter for the UDC. These services can be provided within the departments' current budgets.

LIBRARY
Existing Services: None

Services to be Provided:
City Library privileges will be available to future residents in this area, if any.

HEALTH DEPARTMENT - HEALTH CODE ENFORCEMENT SERVICE
Existing Services: Williamson Cities and County Health District

Services to be Provided:
Williamson Cities and County Health District will continue to implement enforcement of the health districts regulations on the effective date of annexation. Animal control services will also be provided to the area as needed by Hutto Animal Control Division of the Police Department.

STREET MAINTENANCE
Existing Services: Williamson County

Services to be Provided:
Maintenance and access to adjacent existing street facilities and/or future street facilities within public rights of way will be provided/overseen by appropriate City of Hutto departments.

STORM WATER MANAGEMENT
Existing Services: Williamson County Flood Plain Administrator

Services to be Provided
Developers will provide storm water drainage facilities as required of their development at their own expense, and such will be inspected by the City's engineers at time of completion. The City of Hutto will then maintain the drainage in public rights-of-way upon approval of the construction. Property owners and/or Home Owner's Associations or similar entities will maintain drainage facilities located on private property. All construction within the flood plain will be through the appropriate Hutto department(s) and will meet FEMA Flood Plain regulations.

STREET LIGHTING
Existing Services: Oncor Electric Delivery

Services to be Provided:

There are no existing street lights in this area. The Developer will be responsible for initial installation and maintenance of street lighting, if required, within the development until such time as any internal streets have been accepted by the City Council.

TRAFFIC ENGINEERING

Existing Services: None

Services to be Provided:
The City of Hutto, through its appropriate departments, will be able to provide any necessary additional traffic control devices after the effective date of annexation, if warranted, with an approved Traffic Impact Analysis.

SOLID WASTE SERVICES

Existing Services: None

Services to be Provided:
Solid waste collection shall be provided to the area of annexation in accordance with current ordinances. Service shall comply with existing City of Hutto policies, beginning with occupancy of structures.

PARKS AND TRAILS

Existing Service: None

Services to be Provided:
All City-operated parks and trail systems will be available to any future residents of this area upon annexation.

WATER SERVICES

Existing Service: None

Services to be Provided:
Water service for the property will be provided through connection to the City of Hutto's utility systems. Any required extensions of water infrastructure necessary to reach the property shall be the responsibility of the property owner and must be designed, constructed, and installed in accordance with all applicable City standards and regulations. The property owner must complete all required extensions before service can be initiated.

Once connected, ongoing operation, maintenance, and access to existing or future water facilities located within public rights-of-way will be provided or overseen by the appropriate City of Hutto departments.

WASTEWATER SERVICES

Existing Service: None

Services to be Provided:
Wastewater service for the property will be provided through connection to the City of Hutto's utility systems. Any required extensions of wastewater infrastructure necessary to reach the property shall be the responsibility of the property owner and must be designed, constructed, and installed in accordance with all applicable City standards and regulations. The property owner must complete all required extensions before service can be initiated.

Once connected, ongoing operation, maintenance, and access to existing or future wastewater facilities located within public rights-of-way will be provided or overseen by the appropriate City of Hutto departments.

.

4. SERVICE LEVEL. The City will provide the Property with a level of services, infrastructure, and infrastructure maintenance that is comparable to the level of services, infrastructure, and infrastructure maintenance available in other parts of the City with topography, land use, and population density similar to those reasonably contemplated or projected for the Property.

5. EXCLUDED SERVICES. It is understood and agreed that the City is not required to provide a service that is not included in this Agreement. However, City agrees to provide all services to the Property that the City uniformly provides to all other properties within the City limits

6. OWNER'S STIPULATIONS. The Owner agrees and stipulates that the application for annexation serves as the Owner's Petition for annexation for the voluntary annexation of Property into the boundaries of the City, and that the annexation of the Property is voluntary.

7. AUTHORITY. City and Owner represent that they have full power, authority, and legal right to execute, deliver and perform their obligations pursuant to this Agreement. Owner acknowledges that approval of the annexation is within the sole jurisdiction of the City Council. Nothing in this Agreement guarantees favorable decisions by the City Council.

8. SEVERABILITY. If any part, term, or provision of this Agreement is held by the courts to be illegal, invalid, or otherwise unenforceable, such illegality, invalidity, or unenforceability will not affect the validity of any other part, term or provision, and the rights of the parties will be construed as if the part, term, or provision was never part of the Agreement.

9. INTERPRETATION. The parties to this Agreement covenant and agree that in any litigation relating to this Agreement, the terms and conditions of the Agreement will be interpreted according to the laws of the State of Texas. The parties acknowledge that they are of equal bargaining power and that each of them was represented by legal counsel in the negotiation and drafting of this Agreement.

10. GOVERNING LAW AND VENUE. Venue shall be in the state courts located in Williamson County, Texas, and construed in conformity with the provisions of Texas Local Government Code Chapter 43.

11. NO WAIVER. The failure of either party to insist upon the performance of any term or

provision of this Agreement or to exercise any right granted hereunder shall not constitute a waiver of that party's right to insist upon appropriate performance or to assert any such right on any future occasion.

12. GOVERNMENTAL IMMUNITY; DEFENSES. Nothing in this Agreement shall be deemed to waive, modify, or amend any of City's governmental powers or immunities nor any legal defense in availability at law or in equity to City or Owner.

13. COUNTERPARTS. This Agreement may be executed in any number of counterparts, each of which shall be deemed an original and constitute one and the same instrument.

14. NOTICE. Any notice given under this Services must be in writing and may be given: (i) by depositing it in the United States mail, certified, with return receipt requested, addressed to the Party to be notified and with all charges prepaid; or (ii) by depositing it with a service guaranteeing "next day delivery", addressed to the Party to be notified and with all charges prepaid; or (iii) by personally delivering it to the Party, or any agent of the Party listed in this Services Agreement. Notice will be effective only when received. For purposes of notice, the addresses of the Parties will, until changed as provided below, be as follows:

If to Owner, to: Hwy 130 Mixed Use, LLC
Attn: Dharma Rajah
3040 Post Oak Blvd
Houston, Texas 77056

If to City, to: City of Hutto
Attn: James R. Earp
City Manager
500 W. Live Oak St.
Hutto, Texas 78634

The Parties may change their respective addresses to any other address within the United States of America by giving at least five (5) calendar days' written notice to the other Party. Any Party may, by giving at least five (5) calendar days' written notice to the City, designate additional persons or entities to receive copies of notices under this Services Agreement.

15. CAPTIONS. The captions to the various clauses of this Agreement are for informational purposes only and shall not alter the substance of the terms and conditions of this Agreement.

16. AGREEMENT BINDS AND BENEFITS SUCCESSORS AND RUNS WITH THE LAND. This Agreement is binding on and inures to the benefit of the parties, their successors, and assigns. The term of this Agreement constitutes covenants running with the land comprising the Property, is binding on the Owner and the City, and is enforceable by any current or future owner of any portion of the Property for the term of this Municipal Services Agreement. This Municipal Services Agreement will be recorded in the Official Public Records of Williamson County.

17. ENTIRE AGREEMENT. This Agreement constitutes the entire agreement between the

parties and supersedes all prior oral and written agreements between said parties. This Agreement shall not be amended unless executed in writing by both parties.

DRAFT

Executed as of the day and year first above written to be effective on the effective date of annexation of the Property.

CITY OF HUTTO, TEXAS

By: _____
James R. Earp, CPM
City Manager

Date: _____

STATE OF TEXAS **§**
§
COUNTY OF WILLIAMSON **§**

BEFORE ME, the undersigned authority, on this day personally appeared James Earp, known to me to be one of the persons whose names are subscribed to the preceding instrument; he acknowledged to me he is the duly authorized representative for the City of Hutto, Texas and he executed said instrument for the purposes and consideration therein expressed.

GIVEN UNDER MY HAND AND SEAL OF OFFICE this ___ day of _____, 2026.

_____
Notary Public in and for the State of Texas

[Owners' signatures on following pages.]

DRAFT

OWNER: LIMMER CO 132 REAL ESTATE, LLC

By: _____
Moiz Maknojia, Manager

Date: _____

STATE OF TEXAS **§**
§
COUNTY OF _____ **§**

BEFORE ME, the undersigned authority, on this day, personally appeared _____, known to me to be the person whose name is subscribed to the foregoing instrument, and acknowledged to me that he/she executed the same for the purposes and considerations therein expressed.

GIVEN UNDER MY HAND AND SEAL OF OFFICE this _____ day of _____, 2026.

_____
Notary Public in and for the State of Texas

DRAFT

EXHIBIT A
PROPERTY DESCRIPTION AND DEPICTION

DRAFT

512.767.7300
TBPELS F-1386
TBPELS 10110501
www.LJA.com
2700 La Frontera Boulevard, Suite 200, Round Rock, Texas 78681

December 9, 2024

Roxanne Flores
500 West Live Oak
Hutto, Texas 78634

Re: Hutto Limmer Retail Annexation & Zoning Letter of Intent
LJA Job #A3452-0403

Dear Roxanne,

This Letter of Intent is in support of annexation of three parcels with legal descriptions: AW0798 – E. W. Frame Survey Abstract No 798, Acres 1.24, AW0184 – Patrick O'Daugherty Survey Abstract No. 184, Acres 1.603 and AW0542 - Ryan E. Survey, Acres 1.33. The total acreage is 4.17. These tracts are contiguous to the current City Limits and are less than 0.5 miles in width. This will be a commercial property with no residents living on the property. The current property is undeveloped.

The site will be platted as two lots with a proposed gas station consisting of 1 single-story building being approximately 5,000 sf and 12 pump services and 8,000 SF of retail. Associated improvements will also include a parking lot, sidewalks, and a detention structure.

Should you have questions or require additional information regarding this request, please feel free to contact me directly. I can be reached by telephone at (512) 507-1732 or by email at jmadding@lja.com.

Respectfully,

Justin C. Madding, PE, PMP
Sr. Project Manager

THE STATE OF TEXAS

COUNTY OF WILLIAMSON

Before me, the undersigned authority, on this day personally appeared JUSTIN MADDING, known to me to be the person whose name is subscribed to the foregoing instrument and acknowledged to me that he executed the same for the purposes and considerations therein expressed.

Given under my hand and seal of office this 9TH day of DECEMBER, 2024 A.D.

Notary Public Signature

ANGELA PLOETZ
Notary Public Printed Name

ANGELA PLOETZ
Notary Public, State of Texas
Comm. Expires 03-23-2028
Notary ID 132413976

(Seal)

ELECTRONICALLY RECORDED 2023027430
Williamson County, Texas Total Pages: 7

Chicago Title
GF# CTA2300344
BNW

General Warranty Deed

NOTICE OF CONFIDENTIALITY RIGHTS

IF YOU ARE A NATURAL PERSON, YOU MAY REMOVE OR STRIKE ANY OF THE FOLLOWING INFORMATION FROM ANY INSTRUMENT THAT TRANSFERS AN INTEREST IN REAL PROPERTY BEFORE IT IS FILED FOR RECORD IN THE PUBLIC RECORDS: YOUR SOCIAL SECURITY NUMBER OR YOUR DRIVER'S LICENSE NUMBER.

Date: April 4, 2023

Grantor: Clifford W. Albert and Sharon E. Albert, Trustees of the Clifford W. and Sharon E. Albert Living Trust dated March 21, 2011, William E. Albert and Frances Albert

Grantor's Mailing Address: 550 BLUE HOLE ROAD, BEEBE, AR 72012

Grantee: Limmer Co 132 Real Estate LLC, a Texas limited liability company

Grantee's Mailing Address: 44016 Logan Ridge Dr, Cedar Park, TX 78613

Consideration: Cash and other good and valuable consideration.

Property (including any improvements):

All of that 4.173 acres of land, more or less, out of the E.W. FRAME SURVEY, ABSTRACT NO. 798, PATRICK O'DAUGHERTY SURVEY, ABSTRACT NO. 184 and EDWARD RYAN SURVEY COVERT 79 in Williamson County, Texas, being a portion of the 88.5 acres of land, called First Tract, conveyed to Clifford W. Albert and Sharon W. Albert, Trustees of the Clifford W. and Sharon E. Albert Living Trust, in the Special Warranty Deed recorded in Document No. 2013029401, of the Official Public Records of Williamson County, Texas. Said tract of land is shown by metes and bounds in the Special Warranty Deed of The Hutto Bypass Right of Way recorded in Document No. 2003112454, of the Official Public Records of Williamson County, Texas and more particularly described in **Exhibit "A"** attached hereto and incorporated herein by reference.

Reservations from Conveyance: None

Exceptions to Conveyance and Warranty:

Liens described as part of the Consideration and any other liens described in this deed as being either assumed or subject to which title is taken; validly existing easements, rights-of-way, and prescriptive rights, whether of record or not; all presently recorded and

Unofficial Document

validly existing restrictions, reservations, covenants, conditions, oil and gas leases, mineral interests outstanding in persons other than Grantor, and other instruments, other than conveyances of the surface fee estate, that affect the Property; validly existing rights of adjoining owners in any walls and fences situated on a common boundary; any discrepancies, conflicts, or shortages in area or boundary lines; any encroachments or overlapping of improvements; all rights, obligations, and other matters arising from and existing by reason of any water, utility, road, or improvement districts which affect the Property; standby fees, taxes, and assessments by any taxing authority for the current year, which Grantee assumes and agrees to pay, and subsequent assessments for that and prior years due to change in land usage, ownership, or both, the payment of which Grantee also assumes.

Grantor, for the Consideration and subject to the Reservations from Conveyance and the Exceptions to Conveyance and Warranty, grants, sells, and conveys to Grantee the Property, together with all and singular the rights and appurtenances thereto in any way belonging, to have and to hold it to Grantee and Grantee's heirs, successors, and assigns forever. Grantor warrants that Grantor owns and has legal and equitable title to all of the Property in fee simple, has the right to convey the Property, and binds Grantor and Grantor's heirs and successors to warrant and forever defend all and singular the Property to Grantee and Grantee's heirs, successors, and assigns against every person whomsoever lawfully claiming or to claim the same or any part thereof, except as to the Reservations from Conveyance and the Exceptions to Conveyance and Warranty.

When the context requires, singular nouns and pronouns include the plural.

NOTICE: This instrument was prepared by Hancock McGill & Bleau, LLLP (HMB) at the request of Chicago Title or the parties using information provided by the title company and the parties. Unless we have been provided with a copy of any contracts related to this transaction or been informed of any reservations required by the Grantor, the reservations will not be included in this warranty deed and by accepting this deed, all parties release HMB from any liability resulting from the failure to include undisclosed reservations. We have not investigated or verified information provided to us and do not warrant the validity of the information or quality of title to the real estate described above. **We do not represent the parties named in this instrument. The parties should seek independent legal counsel for advice concerning the effect and consequences of this instrument.**

Clifford W Albert, TRUSTEE OF THE CLIFFORD W. ALBERT AND SHARON E. ALBERT LIVING TRUST DATED MARCH 21, 2011

Clifford W. Albert, Trustee of the Clifford W. and Sharon E. Albert Living Trust dated March 21, 2011

Sharon E Albert Trustee

Sharon E. Albert, Trustee, of the Clifford W. and Sharon E. Albert Living Trust dated March 21, 2011

Of The Clifford W and Sharon E Albert Living Trust dated March 21, 2011

Unofficial Document

William E. Albert

Frances Albert

State of
County of

This document was acknowledged before me on ____, 2023 by Clifford W. Albert, Trustee of the Clifford W. and Sharon E. Albert Living Trust dated March 21, 2011.

Notary Public, State of

State of
County of

This document was acknowledged before me on ____, 2023 by Sharon E. Albert, Trustee, of the Clifford W. and Sharon E. Albert Living Trust dated March 21, 2011.

Notary Public, State of

State of Texas
County of Williamson

This document was acknowledged before me on April 4, 2023 by William E. Albert.

Notary Public, State of Texas

BECKY VAN WESTEN
Notary ID # 1162152-3
My Commission Expires
05-19-2023

Unofficial Document

William E. Albert

Frances Albert

State of Arkansas
County of White

This document was acknowledged before me on April 4, 2023 by Clifford W. Albert, Trustee of the Clifford W. and Sharon E. Albert Living Trust dated March 21, 2011.

Lyndee Reed
Notary Public, State of AR

LYNDEE REED
MY COMM. EXPIRES 01-20-2026
NOTARY PUBLIC
COMM # 12345948
WHITE COUNTY, ARKANSAS

State of Arkansas
County of White

This document was acknowledged before me on April 4, 2023 by Sharon E. Albert, Trustee, of the Clifford W. and Sharon E. Albert Living Trust dated March 21, 2011.

Lyndee Reed
Notary Public, State of AR

LYNDEE REED
MY COMM. EXPIRES 01-20-2026
NOTARY PUBLIC
COMM # 12345948
WHITE COUNTY, ARKANSAS

State of Texas
County of Williamson

This document was acknowledged before me on ____, 2023 by William E. Albert.

Notary Public, State of Texas

Unofficial Document

State of Texas
County of Williamson

This document was acknowledged before me on April 4, 2023 by Frances Albert.

Notary Public, State of Texas

BECKY VAN WESTEN
Notary ID # 1162152-3
My Commission Expires
05-19-2023

Prepared By:
Hancock McGill & Bleau, L.L.L.P.
Attorneys at Law

AFTER RECORDING RETURN TO:

Unofficial Document

SURVEY NO. 2353

FIELD NOTES OF
4.173 ACRES OF LAND
OUT OF THE E.W. FRAME SURVEY, ABSTRACT NO. 798,
PATRICK O'DAUGHERTY SURVEY, ABSTRACT NO. 184
AND EDWARD RYAN SURVEY COVERT NO. 79,
WILLIAMSON COUNTY, TEXAS

METES AND BOUNDS DESCRIPTION

ALL OF THAT 4.173 ACRES OF LAND, MORE OR LESS, OUT OF THE E.W. FRAME SURVEY, ABSTRACT NO. 798, PATRICK O'DAUGHERTY SURVEY, ABSTRACT NO. 184 AND EDWARD RYAN SURVEY COVERT 79 IN WILLIAMSON COUNTY, TEXAS, BEING A PORTION OF THE 88.5 ACRES OF LAND, CALLED FIRST TRACT, CONVEYED TO CLIFFORD W. ALBERT AND SHARON E. ALBERT, TRUSTEES OF THE CLIFFORD W. AND SHARON E. ALBERT LIVING TRUST, IN THE SPECIAL WARRANTY DEED RECORDED IN DOCUMENT NO. 2013029401 OFTHE OFFICIAL PUBLIC RECORDS OF WILLIAMSON COUNTY, TEXAS. SAID TRACT OF LAND IS SHOWN BY METES AND BOUNDS IN THE SPECIAL WARRANTY DEED OF THE HUTTO BYPASS RIGHT OF WAY RECORDED IN DOCUMENT NO. 2003112454 OF THE OFFICIAL PUBLIC RECORDS OF WILLIAMSON COUNTY, TEXAS. SAID TRACT OF LAND HAVING BEEN SURVEYED ON THE GROUND UNDER MY SUPERVISION AND BEING MORE PARTICULARLY DESCRIBED BY METES AND BOUNDS AS FOLLOWS:

BEGINNING at a 1/2" Iron rod found with a cap stamped "Sam Inc." in the easterly Right of Way line of County Road 132 at the northwest corner of the Singh Subdivision, a subdivision recorded in Document No. 2018046065 of the Official Public Records of Williamson County, Texas, for the southwest corner of the tract herein described;

THENCE, along the easterly Right of Way line of County Road 132 and the westerly line of the tract herein described, N 07°45'01" E, a distance of 243.02 feet to a 1/2" iron rod found with a cap stamped "Capital Surveying" for the westerly northwest corner of the tract herein described;

THENCE, N 54°35'04" E, a distance of 68.01 feet to a 1/2' iron rod found with a cap stamped "Capital Surveying" in the southerly Right of Way line of Limmer Loop for the northerly northwest corner of the tract herein described;

THENCE, along the southerly Right of Way line of Limmer Loop and the northerly line of the tract herein described, the following Two (2) courses:

1. S 77°55'09" E, a distance of 264.35 feet to a 1/2" iron rod found with a cap stamped "Capital Surveying" at the beginning of a curve;
2. Along the arc of a curve to the right whose radius1355.00 feet, a chord bearing of S 68°45'36" E, an arc distance of 438.41 feet and a chord distance of 436.50 feet to a 1/2" iron rod found for the northeast corner of the tract herein described;

THENCE, S 12°32'05" E, a distance of 68.60 feet to a 1/2" iron rod found in the westerly Right of Way line of Mager Lane for the easterly corner of the tract herein described;

THENCE, along the westerly Right of Way line of Mager Lane and the easterly line of the tract herein described, along the arc of a curve to the left whose radius is 955.00 feet, a chord bearing of S 39°07' 54" W, an arc distance of 110.48 feet and a chord distance of 110.42 feet to a 1/2" iron rod found at the northeast corner of the Singh Subdivsion for the southeast corner of the tract herein described;

THENCE, along the northerly line of the Singh Subdivision and the southerly line of the tract herein described, N 82°59'40" W, passing a 1/2" iron rod found with a cap stamped "Walker" at a distance of 659.24 feet for a total distance of 704.00 feet to the Point of Beginning and containing 4.173 Acres of land, more or less, as shown on plat of survey prepared herewith.

Edward W. Bradfield
Registered Professional Land Surveyor No. 5617
State of Texas

STATE OF TEXAS
REGISTERED
EDWARD W. BRADFIELD
5617
PROFESSIONAL
LAND SURVEYOR

Unofficial Document

ELECTRONICALLY RECORDED
OFFICIAL PUBLIC RECORDS

2023027430

Pages: 7 Fee: $46.00
04/06/2023 04:26 PM
JDISHER



Nancy E. Rister, County Clerk
Williamson County,Texas

Unofficial Document

Mayor
Mike Snyder

Mayor Pro Tem
Dan Thornton

Council Members
Brian Thompson, Place 1
Dan Thornton, Place 2
Jim Morris, Place 3
Peter Gordon, Place 4
Evan Porterfield, Place 5
Aaron King, Place 6

City Manager
James R Earp, CPM

March 5, 2026
Mr. Justin Madding, P.E.
LJA Engineering, Inc.
2700 La Frontera Blvd
Suite 200
Round Rock, TX 78681
jmadding@LJA.com

RE: Hutto Limmer Retail
Service Extension Request –Water & Wastewater Utilities

Dear Mr. Madding

Thank you for your interest in developing in the City of Hutto. We have reviewed your Service Extension Request for water & wastewater utility service.

In order for the City of Hutto to provide water & wastewater service to your proposed development, the requirements listed in the attached SER responses must be addressed.

This letter provides the information about existing capacity and the needed improvements to provide the requested service. As noted in the application, this information is only valid for 180 days from the date of this letter. Actual capacity is reserved only upon payment or reservation fees or impact fees as applicable. Final service is subject to plan review, approval of construction drawings, payment of all applicable water and wastewater impact fees, capital recovery fees, and/or pro-rata charges, and compliance with the City's Utility Design Criteria and current adopted codes. Water meter size (s) and sewer connection(s) as applicable will be determined during the civil plan review process based on demand calculations. Fire flow availability must be confirmed by a hydraulic analysis or field test at the applicant's expense if required by the fire marshal.

We appreciate your patience as we are working to address the needs of your development while planning for future growth. Please feel free to contact us at (512) 759-4933 or email Roxanne.Spencer@HuttoTX.gov with any questions.

Sincerely,



Patricia A. Davis, MSCE, P.E., LGPP
Interim City Engineer

Attachments:
SER Application

Project Understanding

It is understood this project will consist of a single-phase commercial development on two lots. Lot 1 will be a single-story building with a gas station and ±9,625 square feet of retail and Lot 2 will be a single-story building with ±6,925 square feet of retail. The submitted data is reflected below in Table 1.

Table 1

Category	Data Provided
Living Unit Equivalent (LUE)	10
Water Average Day Demand (ADD) - GPM	--
Water Peak Day Demand (PDD) – GPM	12.88
Water Peak Hour Demand (PHD) – GPM	21.88
Fire Flow Demand – GPM	2,000
Wastewater Average Dry Weather Flow (ADF) – GPM	--
Wastewater Peak Dry Weather Flow (PDF) – GPM	8.44
Wastewater Peak Wet Weather Flow (PWWF) - GPM	10.61

The data as calculated by City of Hutto is reflected below in Table 2.

Table 2

Category	Data Provided
Living Unit Equivalent (LUE)	10
Water Average Day Demand (ADD) - GPM	5
Water Peak Day Demand (PDD) – GPM	13
Water Peak Hour Demand (PHD) – GPM	22
Fire Flow Demand – GPM	1,500
Wastewater Average Dry Weather Flow (ADF) – GPM	1.94
Wastewater Peak Dry Weather Flow (PDF) – GPM	8.45
Wastewater Peak Wet Weather Flow (PWWF) - GPM	10.62

The approximate project location is shown below in Figure 1.

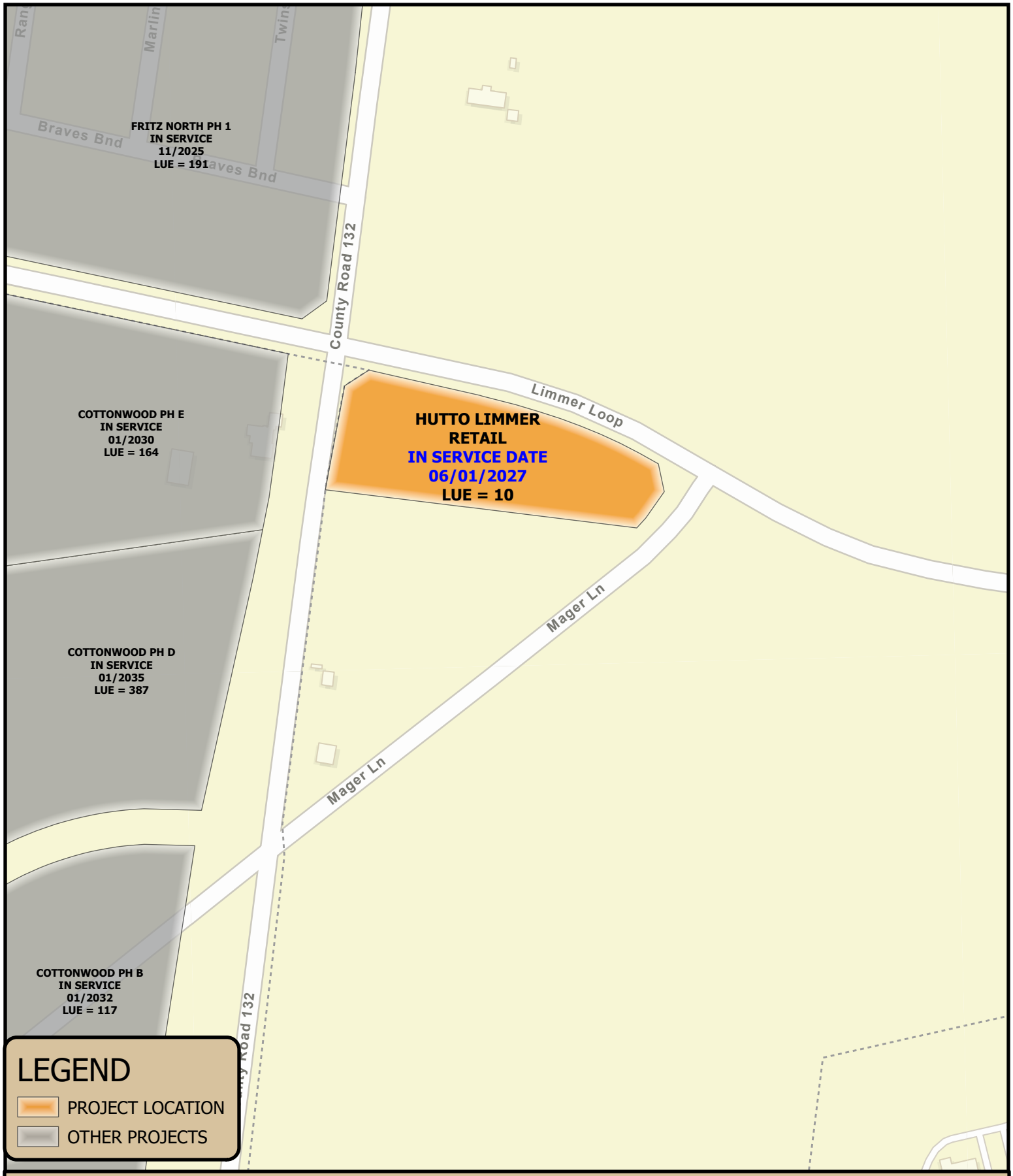

FIGURE 1.0
LOCATION

CITY OF HUTTO

N

Feet

0 100 200

As shown in the aerial imagery below in Figure 2 the area is bound by County Road (CR) 132 on the west, a storage yard on the south, Limmer Loop on the north and Mager Ln on the east.

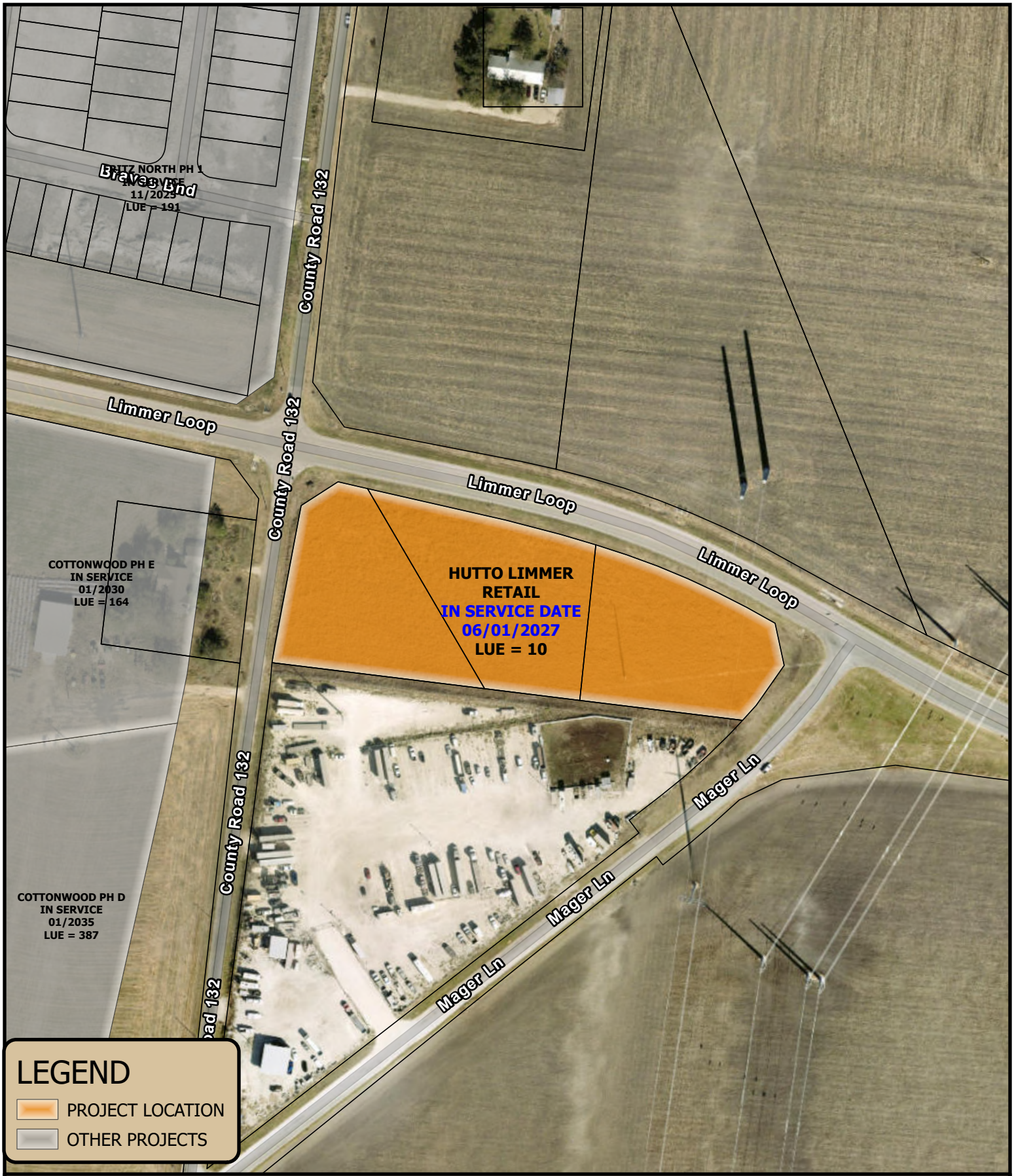

FIGURE 2.0
LOCATION

N

Feet

0 100 200

System Requirements

Per the Hutto Utility Criteria manual all developments must extend utilities to their development as well as to the boundaries of their development for orderly future development. So, the utility system should be designed such that water and wastewater service is available to the adjacent parcels as described in this report.

As shown in Figure 3.0, the Hutto Limmer Retail development will not be allowed to take meter service from the existing 16-inch water line. Per the City of Hutto Utility Criteria Manual 16-inch lines and larger are considered transmission lines. The project will have two 8-inch water main connections to ensure adequate supply, redundancy, and fire protection: the first, located at the northwest portion of the project, will tap into the existing 16-inch water main near the intersection of Limmer Loop and CR 132, and the second, on the project's northeast side, will tie into the existing 16-inch water line near the intersection of Limmer Loop and Mager Ln. Together, these connections will create a looped water distribution system essential for maintaining required fire flow capacity and ensuring system reliability during maintenance or emergency conditions. Figure 3.0 also provides illustrative alignments for construction guidance; however, final routing will be determined by the design engineer. All water infrastructure must comply with the Utility Criteria Manual requirements: water mains must be publicly owned and located within dedicated right-of-way, public utility, or water easements, and private fire hydrants are prohibited, requiring installation of public hydrants within the project boundaries to meet fire protection standards. Additionally, the development must provide an 8-inch water stub to the adjacent undeveloped parcel to the south, ensuring future connectivity and system expansion capabilities.

If the developer or their engineer runs models to show an acceptable alternative to the example shown then that can be considered during the site plan review process.

NOTES:

1. ILLUSTRATIVE ALIGNMENT:
THE PROPOSED WATER LINE ROUTES ARE FOR EXAMPLE PURPOSES ONLY. THE ILLUSTRATED ROUTES SHOW THE MINIMUM PIPE SIZE REQUIRED. IF THE DEVELOPER OR THEIR ENGINEER RUNS MODELS THAT DEMONSTRATE AN ACCEPTABLE ALTERNATIVE TO THE EXAMPLE SHOWN THAT CAN BE CONSIDERED DURING THE SITE PLAN REVIEW.

2. PUBLIC MAIN REQUIREMENTS:
ALL WATER MAINS MUST BE PUBLIC AND LOCATED WITHIN A DEDICATED ROW, PUBLIC UTILITY OR WATER EASEMENT.

3. FIRE HYDRANT SERVICE:
PRIVATE FIRE HYDRANTS ARE NOT PERMITTED. EACH LOT OR PHASE IS ASSUMED TO BE REQUIRED TO HAVE FIRE HYDRANT COVERAGE VIA LOOPED 8" PUBLIC WATER LINES.

FRITZ NORTH PH 1
IN SERVICE
11/2025
LUE = 191

County Road 132

8" WATER MAIN
CONNECT TO EX
16" WATER MAIN

Limmer Loop

16 Inches

16 Inches

Limmer Loop

8" WATER MAIN
CONNECT TO EX
16" WATER MAIN

6 Inches

HUTTO LIMMER
RETAIL
IN SERVICE DATE
06/01/2027
LUE = 10

8" WATER MAIN
EXAMPLE OF 8" PUBLIC WATER MAIN STUB TO ADJACENT PROPERTY

8" WATER MAIN
EXAMPLE OF 8" PUBLIC WATER MAIN LOOP

8" WATER MAIN
EXAMPLE OF 8" PUBLIC WATER MAIN STUB TO ADJACENT PROPERTY

County Road 132

Mager Ln

Mager Ln

LEGEND
- PROPOSED WATER (ILLUSTRATIVE ONLY)
- EXISTING WATER
- PROJECT LOCATION
- OTHER PROJECTS

FIGURE 3.0
WATER

CITY OF HUTTO

N

Feet

0 100 200

As shown in Figure 4.0, wastewater from the Hutto Limmer Retail development will flow by 8-inch gravity to the existing 21-inch wastewater main along the west side of CR 132. Figure 4.0 presents illustrative alignments of the proposed onsite wastewater to guide construction; however, final routing will be determined by the design engineer and topographical constraints to maintain proper slopes. Figures 4.1 below shows all the wastewater gravity mains utilized by this project. All proposed wastewater mains must be public and located within a dedicated ROW, Public Utility, or Wastewater easement. This project will be required to provide a wastewater stub to the adjacent south undeveloped parcel.

It should be noted that the city in determining this response did not perform a detailed analysis of the topography along this path. If the design engineer determines a better alternative to the one shown that can be determined through the detailed design process and must be approved by the City Engineer.

NOTES:

1. WASTEWATER CONVEYANCE:
ALL WASTEWATER FOR THIS PROJECT SHALL BE ROUTED INTO THE EX 21" INTERCEPTOR ON THE WEST SIDE OF CR 132.

2. ILLUSTRATIVE ALIGNMENT:
THE PROPOSED WASTEWATER FOR HUTTO LIMMER RETAIL SHOWN ARE FOR EXAMPLE PURPOSES ONLY.

3. PUBLIC MAIN REQUIREMENTS:
ANY WASTEWATER MAIN WITH A DIAMTER OF 8" OR GREATER MUST BE PUBLIC AND LOCATED WITHIN A DEDICATED PUBLIC UTILITY OR WASTEATER EASEMENT.

EX 21" WASTEWATER MAIN
CONNECT TO EX MANHOLE
RIM ELEV: ±673.77
INVERT ELEV: ±641.93

Limmer Loop

County Road 132

HUTTO LIMMER RETAIL
IN SERVICE DATE
06/01/2027
LUE = 10

8" WASTEWATER MAIN
EXAMPLE OF PUBLIC WASTEWATER (ON SITE)

8" WASTEWATER MAIN
EXAMPLE OF PUBLIC WASTEWATER STUB OUT

DA #1
25 LUEs

Mager Ln

COTTONWOOD PH E
IN SERVICE
01/2030
LUE = 164

COTTONWOOD
PH D
IN SERVICE
01/2035
LUE = 387

21" PVC

Legend

- PROPOSED WASTEWATER FOR PROJECT
- EXISTING MANHOLE UTILIZED BY PROJECT
- EXISTING GRAVITY MAIN UTILIZED BY PROJECT
- EX WASTEWATER MANHOLE
- EX WASTEWATER GRAVIY MAIN
- SER OFFSITE DRAINAGE AREA
- PROJECT LOCATION
- OTHER PROJECTS

FIGURE 4.0
WASTEWATER

N

Feet

0 100 200

PEAK WET WEATHER FLOW MODEL RESULTS		
GRAVITY PIPES UPSTREAM TO DOWNSTREAM	DIA	PERCENT FULL INCLUDING ALL SERs
1	21	23.29%
2	21	26.68%
3	21	30.71%
4	21	26.79%
5	21	34.55%
6	21	35.99%
7	21	34.46%
8	21	33.88%
9	21	35.12%
10	21	34.37%
11	21	34.59%
12	21	42.63%
13	21	42.08%
14	21	54.34%
15	21	59.06%
16	21	55.08%
17	21	65.59%
18	21	56.84%
19	21	47.56%

EXISTING WASTEWATER MAIN UTILIZED BY THIS PROJECT (NOT ABLE TO ACCEPT FLOW UNTIL COTTNWOOD CREEK INTERCEPTOR IS COMPLETE)

COTTONWOOD CREEK INTERCEPTOR
42" WASTEWATER MAIN
(UNDER CONSTRUCTION)

CENTRAL WWTP
CURRENTLY IN RERATE PROCESS
FROM 0.99 MGD TO 1.2 MGD

Legend
- PROPOSED WASTEWATER FOR PROJECT
- EXISTING MANHOLE UTILIZED BY PROJECT
- EXISTING GRAVITY MAIN UTILIZED BY PROJECT
- EX WASTEWATER MANHOLE
- EX WASTEWATER GRAVIY MAIN
- COTTONWOOD CREEK INTERCEPTOR (UNDER CONSTRUCTION)
- PROJECT LOCATION
- OTHER PROJECTS

FIGURE 4.1
WASTEWATER MAIN UTILIZED BY PROJECT

N
Feet
0 500 1,000

Additional projects are needed to facilitate service for this project and are indicated below. All of the projects and the responsibility are shown below in Table 3. This project is not eligible for service prior to the timelines listed below.

Table 3

Project Description	Design and Construction Responsibility	Funding Responsibility	Estimated Completion
Secure additional short-term water supply	City	City	Spring 2026
Construct 8” water main(s)	Developer	Developer	TBD by developer
Construct 8” wastewater main(s)	Developer	Developer	TBD by developer
Cottonwood Interceptor	City	City	Near Completion
Central WWTP Re-Rate to 1.2 MGD	City	City	Spring 2028

Any cost sharing or reimbursements requested of the city must be approved in writing by Hutto City Council.

Engineering Department
500 West Live Oak • Hutto, TX 78634 • Phone: (512) 759-4933
E-Mail: Roxanne.Flores@huttotx.gov

Service Extension Request Application and Submittal Checklist

PROJECT NAME: Hutto Limmer Retail

APPLICANT INFORMATION

Name: Justin Madding, P.E., PMP

Company Name: LJA Engineering, Inc.

Address: 2700 La Frontera Blvd, Suite 200 Round Rock, Texas 78681

Phone: (512) 507-1732 Email: jmadding@LJA.com

PROPERTY OWNER INFORMATION

Name: Sohil Maknojia

Company Name: Limmer Co 132 Real Estate LLC

Address: 4406 Logan Ridge Dr. Cedar Park, Texas 78613

Phone: 512-665-1815 Email: sohilmak@gmail.com

PROPERTY INFORMATION

Legal Description: Acres/Survey/Abstract No. AW0798 - Frame, O.r. Sur., Acres 1.24; AW0184 - Daugherty, P.o. Sur., Acres 1.603; AW0542 - Ryan, E. Sur., Acres 1.33

OR Lot_____ Block_____ Subdivision Name: _____

Total acreage 4.173 Percentage of acreage within city limits: 100 %

Water pressure zone: _____ Wastewater drainage basin: Not in CCN

Water provider: City of Hutto Wastewater provider: N/A

TYPE OF SERVICE REQUESTED: ☒ WATER ☒ WASTEWATER

Proposed use:

☐ Single family: # of units: _____ ☐ Duplex/Triplex/Fourplex: # of units: _____

☐ Multifamily: # of units: _____ ☐ Office: # square feet: _____

☒ Retail/Commercial: # square feet: 16,550

Water utility requirements: Peak Hour: 21.88 gpm; Peak Day 12.88 gpm

Highest fire flow requirements: 2,000 gpm for 2 hours at 20 psi.

Fire sprinkler system flow rates: 1,000 gpm for 2 hours at 20 minimum residual pressure.

Wastewater utility capacity requirements (peak wet weather flows with I & I): 10.61 gpm.

Requested city cost participation for water improvements: $_____ based on total construction cost of $ _____

Highest elevation on the land to be served by the Service Extension Request (SER): 674 above mean sea level.

Lowest elevation on the land to be served by the Service Extension Request (SER): 670 above mean sea level.

REQUIRED FOR SUBMITTAL

All items listed must be included with application, unless otherwise noted.

- [x] Complete, signed application
- [x] Applicant has coordinated with staff on submittal requirements
- [x] Proof of ownership (copy of deed)
- [x] All required fees may be provided by cash, credit card or check made payable to: City of Hutto
- [x] Letter describing the proposed development
- [x] Field notes and sketch of property by a registered professional land surveyor on (1) 8½" x 11"

CONDITIONS OF APPROVAL

- ☐ The level of service approved by this document does not imply commitment for land use.
- ☐ Service extension approvals automatically expire 180 days after the date of issuance unless a development application has been approved by the Development Services Department. Once an approved development application expires the service extension approval expires on the same date.
- ☐ LUEs shall be prepaid to reserve the capacity. The payment is required within 60 days of SER approval per R-2024-012.
- ☐ Service extension requests are subject to the guidelines established in the Hutto City Code of Ordinances.
- ☐ Construction of all service extensions are subject to all utility guidelines and planning ordinances.
- ☐ If requested, the proposed improvements will be dedicated to the City of Hutto for ownership, operation, and maintenance.

PROPERTY OWNER CONSENT/AGENT AUTHORIZATION

By my signature I hereby affirm that I am the property owner of record, or if the applicant is an organization or business entity, that authorization has been granted to represent the owner, organization or business in this application. I certify that the preceding information is complete and accurate, and it is understood that I agree to the submittal of this application. Additionally, my signature below indicates my awareness of the fee(s) required at the time of application submittal and that this fee(s) is non-refundable even in the event of application withdrawal or if reviewed and denied.

By signing this form, the owner of the property authorizes the City of Hutto to begin proceedings in accordance with the process for the type of application indicated on page one of this application. The owner further acknowledges that submittal of an application does not in any way obligate the City to approve the application and that although City staff may make certain recommendations regarding this application, the City Council may not follow that recommendation and may make a final decision that does not conform to the staff's recommendation.

Property Owner Signature | Justin Madding — Property Owner Printed Name | 6/21/24 — Date

THE STATE OF TEXAS

COUNTY OF Williamson

Before me, the undersigned authority, on this day personally appeared Justin Madding, known to me to be the person whose name is subscribed to the foregoing instrument and acknowledged to me that he executed the same for the purposes and considerations therein expressed.

Given under my hand and seal of office this 21 day of June, 2024 A.D.

Notary Public Signature | Jessica E.S. Davis — Notary Public Printed Name

(Seal)

JESSICA E S DAVIS
Notary ID #132171086
My Commission Expires
September 21, 2027

If there are multiple property owners attach separate page(s) with notarized signature(s)

Agent Authorization Letter

(for delegating requests and applications)

Property: AW0798 - Frame, O.r. Sur., Acres 1.24; AW0184 - Daugherty, P.o. Sur., Acres 1.603; AW0542 - Ryan, E. Sur., Acres 1.33

Applicant: LJA Engineering (Justin Madding)

I/we hereby certify that I/we am/are the owner(s) of the above described property. I/we am/are respectfully requesting processing and approval of the above referenced permit(s) review. I/we hereby authorize the Applicant listed on this application to act on my/our behalf during the processing and presentation of this request. They shall be the principal contact with Travis County in processing this application.

1st Owner's Signature _____ Date 6/20/24

1st Owner's printed name Moiz Maknojia

2nd Owner's Signature _____ Date _____

2nd Owner's printed name _____

Sworn and subscribed before me this 20 day of June, 2024

Cynthia Denise Salinas

Notary Public in and for the State of Texas

My commission expires on 7/05/2028

CYNTHIA DENISE SALINAS
Notary Public, State of Texas
Comm. Expires 07-05-2028
Notary ID 130725973

512.767.7300
TBPELS F-1386
TBPELS 10110501
www.LJA.com
2700 La Frontera Boulevard, Suite 200, Round Rock, Texas 78681

November 24, 2025

Roxanne Flores
500 West Live Oak
Hutto, Texas 78634

Re: Hutto Limmer Retail SER Application Summary Letter
LJA job #A3452-0403

Dear Roxanne,

This letter summarizes the proposed improvements to this tract for the purpose of obtaining a Service Extension Request for water service to the site. Please recall, this project has an approved SER that has expired. We are submitting this new application with updated proposed development information, the previously approved SER is attached to this letter for reference.

The site is made of three tracts that will be platted as two lots, both to be constructed in one phase. The proposed development will consist of a gas station (with no carwash) with a single-story building being ± 9,625 sf and 10 gas pumps on Lot 1. Lot 2 will consist of a single-story retail building being ± 6,925 SF. Associated improvements will also include joint-use parking lot, sidewalks, and a stormwater detention structure.

LUE calculations for the project, using City of Hutto LUE Table, are as follows:

*Gas Station (retail use) = 9,625 SF * (1 LUE / 1,660 SF) = 5.8 LUE*
*Retail = 6,925 SF * (1 LUE / 1,660 SF) = 4.2 LUE*
Total LUEs = ***10 LUE***

Peak Hour and Peak Day have been calculated per Section 1.7.2. Water Systems from the City of Hutto UCM:

*Peak Hour = 900 gallons/person/day * 10 LUEs = 31,500 gpd =* ***21.88 gpm***
*Peak Day = 530 gallons/person/day * 10 LUEs = 18,550 gpd =* ***12.88 gpm***

Average Dry-Weather Flow, Peak Dry-Weather Flow, and Peak Wet-Weather Flow have been calculated per Section 1.7.3. Wastewater Systems from the City of Hutto UCM.

F = 1.94 gpm
PDWF = ***8.44 gpm***
*I&I = 4.17 acres * (750 gpd / 1 acre/1440) = 2.17 gpm*
PWWF = ***10.61 gpm***

Per the 2021 Internation Fire Code the highest fire flow requirements will be for the 9,625 SF gas station building. Construction is anticipated to be Type II-B and will require a fire flow of 2,000 gpm for 2 hours at 20psi with the fire sprinkler system reduction resulting in no less than 1,500 gpm.

Should you have questions or require additional information regarding this request, please feel free to contact me directly. I can be reached by telephone at (512) 684-6036 or by email at jlozano@lja.com.

Respectfully,

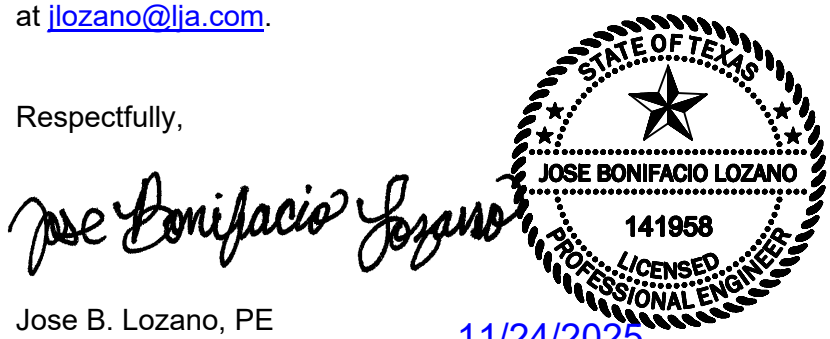

Jose B. Lozano, PE
Project Manager

11/24/2025

Engineering Department
500 West Live Oak • Hutto, TX 78634 • Phone: (512) 759-4933
E-Mail: Roxanne.Flores@huttotx.gov

Service Extension Request Application and Submittal Checklist

PROJECT NAME: Hutto Limmer Retail

APPLICANT INFORMATION

Name: Justin Madding, P.E. PMP

Company Name: LJA Engineering, Inc.

Address: 2700 La Frontera Blvd, Suite 200 Round Rock, Texas 78681

Phone: (512) 507-1732 Email: jmadding@LJA.com

PROPERTY OWNER INFORMATION

Name: Sohil Maknojia

Company Name: Limmer Co 132 Real Estate LLC

Address: 4406 Logan Ridge Dr. Cedar Park, Texas 78613

Phone: 512-665-1815 Email: sohilmak@gmail.com

PROPERTY INFORMATION

Legal Description: Acres/Survey/Abstract No. AW0798 - Frame, O.r. Sur., Acres 1.24; AW0184 - Daugherty, P.o. Sur., Acres 1.603; AW0542 - Ryan, E. Sur., Acres 1.33

OR Lot_____ Block_____ Subdivision Name: _____

Total acreage 4.173 Percentage of acreage within city limits: 100 %

Water pressure zone: _____ Wastewater drainage basin: NA

Water provider: City of Hutto Wastewater provider: NA - Spetic

TYPE OF SERVICE REQUESTED: ☒ WATER ☐ WASTEWATER

Proposed use:

☐ Single family: # of units: _____ ☐ Duplex/Triplex/Fourplex: # of units: _____

☐ Multifamily: # of units: _____ ☐ Office: # square feet: _____

☒ Retail/Commercial: # square feet: 13,000

Water utility requirements: Peak Hour: 6,300 gpm; Peak Day 3,710 gpm

Highest fire flow requirements: 1,500 gpm for 2 hours at 20 psi.

Fire sprinkler system flow rates: 1,000 gpm for 2 hours at 20 minimum residual pressure.

Wastewater utility capacity requirements (peak wet weather flows with I & I): NA gpm.

Requested city cost participation for water improvements: $_____ based on total construction cost of $ _____

Highest elevation on the land to be served by the Service Extension Request (SER): 674 above mean sea level.

Lowest elevation on the land to be served by the Service Extension Request (SER): 670 above mean sea level.

REQUIRED FOR SUBMITTAL

All items listed must be included with application, unless otherwise noted.

- [X] Complete, signed application
- [X] Applicant has coordinated with staff on submittal requirements
- [X] Proof of ownership (copy of deed)
- [X] All required fees may be provided by cash, credit card or check made payable to: City of Hutto
- [X] Letter describing the proposed development
- [X] Field notes and sketch of property by a registered professional land surveyor on (1) 8½" x 11"

CONDITIONS OF APPROVAL

- ☐ The level of service approved by this document does not imply commitment for land use.
- ☐ Service extension approvals automatically expire 180 days after the date of issuance unless a development application has been approved by the Development Services Department. Once an approved development application expires the service extension approval expires on the same date.
- ☐ LUEs shall be prepaid to reserve the capacity. The payment is required within 60 days of SER approval per R-2024-012.
- ☐ Service extension requests are subject to the guidelines established in the Hutto City Code of Ordinances.
- ☐ Construction of all service extensions are subject to all utility guidelines and planning ordinances.
- ☐ If requested, the proposed improvements will be dedicated to the City of Hutto for ownership, operation, and maintenance.

PROPERTY OWNER CONSENT/AGENT AUTHORIZATION

By my signature I hereby affirm that I am the property owner of record, or if the applicant is an organization or business entity, that authorization has been granted to represent the owner, organization or business in this application. I certify that the preceding information is complete and accurate, and it is understood that I agree to the submittal of this application. Additionally, my signature below indicates my awareness of the fee(s) required at the time of application submittal and that this fee(s) is non-refundable even in the event of application withdrawal or if reviewed and denied.

By signing this form, the owner of the property authorizes the City of Hutto to begin proceedings in accordance with the process for the type of application indicated on page one of this application. The owner further acknowledges that submittal of an application does not in any way obligate the City to approve the application and that although City staff may make certain recommendations regarding this application, the City Council may not follow that recommendation and may make a final decision that does not conform to the staff's recommendation.

Property Owner Signature | Justin Madding — Property Owner Printed Name | 6/21/24 — Date

THE STATE OF TEXAS

COUNTY OF Williamson

Before me, the undersigned authority, on this day personally appeared Justin Madding, known to me to be the person whose name is subscribed to the foregoing instrument and acknowledged to me that he executed the same for the purposes and considerations therein expressed.

Given under my hand and seal of office this 21 day of June, 2024 A.D.

Notary Public Signature | Jessica E.S. Davis — Notary Public Printed Name

(Seal)

JESSICA E S DAVIS
Notary ID #132171086
My Commission Expires
September 21, 2027

If there are multiple property owners attach separate page(s) with notarized signature(s)

HUTTO LIMMER RETAIL

A FINAL PLAT OF 4.170 ACRES OUT OF THE E.W. FRAME SURVEY, ABSTRACT NO. 798, THE PATRICK O'DAUGHERTY SURVEY, ABSTRACT NO. 184, AND THE EDWARD RYAN SURVEY, COVERT 79, WILLIAMSON COUNTY, TEXAS, BEING THAT CERTAIN 4.173 ACRE TRACT CONVEYED TO LIMMER CO 132 REAL ESTATE LLC, A TEXAS LIMITED LIABILITY COMPANY BY DEED RECORDED IN DOCUMENT NO. 2023027430, OFFICIAL PUBLIC RECORDS, WILLIAMSON COUNTY, TEXAS.

DOC # _____

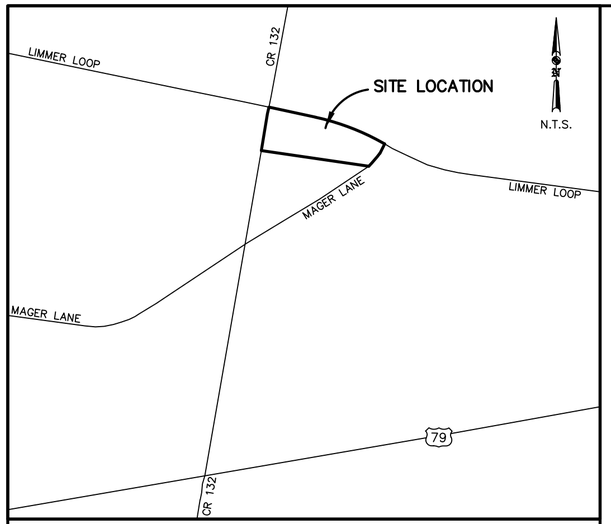

LOCATION MAP

CURVE DATE: C1
R=1355.00' (1355.00' RECORD)
D=18°32'20"
L=438.43' (438.41' RECORD)
Cd=S 68°45'16" E 436.52'

CURVE DATE: C2
R=955.00' (955.00' RECORD)
D=06°38'09"
L=110.60' (110.48' RECORD)
Cd=S 39°12'12" W 110.54'

NORTH

SCALE: 1" = 60'

0 60 120 180

OWNERS: LIMMER CO 132 REAL ESTATE LLC,
A TEXAS LIMITED LIABILITY COMPANY

ACREAGE: 4.170 ACRES

NUMBER OF LOTS: 2

LINEAR FEET OF NEW STREETS: 0'

SUBMITTAL DATE: __-__-__2024

PATENT SURVEY: E.W. FRAME SURVEY, ABSTRACT NO. 798
PATRICK O'DAUGHERTY SURVEY, ABSTRACT NO. 184

ENGINEER: JUSTIN C. MADDING
REGISTERED PROFESSIONAL ENGINEER NO. 122139
LJA ENGINEERING, INC.
2700 LA FRONTERA BOULEVARD
SUITE 200
ROUND ROCK, TEXAS 78681
TBPE REG. NO. F-1386

SURVEYOR: DONALD DEAN BOERNER
REGISTERED PROFESSIONAL LAND SURVEYOR #5207
DONNIE BOERNER SURVEYING COMPANY L.P.
228 HOLIDAY ROAD
COMFORT, TEXAS 78013

BENCHMARK DESCRIPTION & ELEVATION WITH VERTICAL DATUM AND GEOID:

BENCHMARK 1: ETCHED SQUARE IN CONCRETE
BASE OF POWER POLE
ELEVATION=672.85 FT.
N=10176324.797
E=3181081.124
NAD83 / NAVD88 / GEOID12B

HUTTO ECONOMIC DEVELOPMENT CORPORATION
DOCUMENT NO. 2023047850
OFFICIAL PUBLIC RECORDS
TRACT B – 22.24 ACRES

CLIFFORD W. ALBERT ET AL.
DOCUMENT NO. 2013029401
OFFICIAL PUBLIC RECORDS
DESCRIBED IN VOLUME 127 PAGES 448–449
DEED RECORDS
REMAINING PORTION OF A 88.5 ACRES

PATRICK O'DAUGHERTY SURVEY ABSTRACT NO. 184

APPROXIMATE SURVEY LINE

N 54°34'33" 68.01'
(N 54°35'04" E 68.01' RECORD)

FOUND STEEL ROD WITH A RED "CAPITAL SURVEYING CO INC" PLASTIC CAP

FOUND STEEL ROD WITH A RED "CAPITAL SURVEYING CO INC" PLASTIC CAP

FOUND STEEL ROD WITH A DESTROYED RED CAP

35.1'

59.04'

44.1'

8.97'

S 77°55'08" E 264.32'
(S 77°55'09" E 264.35' RECORD)

174.00'

90.32'

90' RIGHT-OF-WAY
DOCUMENT NO. 2003112454
OFFICIAL PUBLIC RECORDS

FOUND 1/2" STEEL ROD

25' BUILDING SETBACK LINE

LIMMER LOOP

C1

N 07°32'40" E 296.79'

N 07°45'41" E 243.07'
(N 07°45'01" E 243.02' RECORD)

N 07°25'02" E 282.86'

10' PUBLIC UTILITY EASEMENT HEREBY DEDICATED

25' BUILDING SETBACK LINE

VARIABLE WIDTH ROAD WIDENING EASEMENT HEREBY DEDICATED

LOT 1
1.358 ACRES

S 12°04'51" W 274.60'

LOT 2
2.812 ACRES

BENEFICIARY: (LONE STAR GAS COMPANY)
APPROXIMATE CENTERLINE OF RIGHT-OF-WAY AND EASEMENT
DOCUMENT NO. 2022129464
OFFICIAL PUBLIC RECORDS

FOUND 1/2" STEEL ROD

S 12°38'09" 68.57'
(S 12°32'05" E 68.60' RECORD)

FOUND STEEL ROD WITH AN ALUMINUM "S.A.M. INC. CONTROL" STAMPED CAP

34.2'

44.75'

FOUND STEEL ROD WITH AN YELLOW "WALKER 5283" PLASTIC CAP

157.67'

BENEFICIARY: (ONCOR ELECTRIC DELIVERY COMPANY LLC)
APPROXIMATE CENTERLINE OF EASEMENT AND RIGHT-OF-WAY
DOCUMENT NO. 2022129464
OFFICIAL PUBLIC RECORDS

50' PER ONCOR

BENCHMARK 1

50' PER ONCOR

BENEFICIARY: (LCRA TRANSMISSION SERVICES CORPORATION)
ELECTRICAL LINE EASEMENT AND RIGHT-OF-WAY
DOCUMENT NO. 2010040873
OFFICIAL PUBLIC RECORDS
PART 2 – 0.483 ACRES

FOUND 1/2" STEEL ROD

BENEFICIARY: (ENTERPRISE CRUDE PIPELINE LLC)
PERMANENT EASEMENT
DOCUMENT NO. 2017010602
OFFICIAL PUBLIC RECORDS
PART 2 – 0.03 ACRES

25' BUILDING SETBACK LINE

C2

N 82°59'53" W 703.94'
(N 82°59'40" W 704.00' RECORD)

501.52'

FOUND 1/2" STEEL ROD

FOUND 1/2" STEEL ROD

COUNTY ROAD 132

HUTTO ECONOMIC DEVELOPMENT CORPORATION
DOCUMENT NO. 2023047850
OFFICIAL PUBLIC RECORDS
TRACT A – 63.15 ACRES

JOSIAS B. BEALLE SURVEY ABSTRACT NO. 97

O.R. FRAME SURVEY ABSTRACT NO. 798

VARIABLE WIDTH ROAD WIDENING EASEMENT
DOCUMENT NO. 2018046065
OFFICIAL PUBLIC RECORDS

LOT ONE
BLOCK A

SINGH SUBDIVISION
DOCUMENT NO. 2018046065
OFFICIAL PUBLIC RECORDS

APPROXIMATE SURVEY LINE

90' RIGHT-OF-WAY
DOCUMENT NO. 2003112454
OFFICIAL PUBLIC RECORDS

WILLIAMSON COUNTY
DOCUMENT NO. 2006069304
OFFICIAL PUBLIC RECORDS
0.343 ACRES

REMAINS OF ABANDONED COUNTY ROAD NO. 136
UNKNOWN OWNERSHIP

MAGER LANE

LYNNE SHAPIRO COVERT, ET. AL
DOCUMENT NO. 2024000778
OFFICIAL PUBLIC RECORDS
87.23 ACRES

APPROXIMATE SURVEY LINE

DONNIE BOERNER SURVEYING COMPANY L.P.
228 HOLIDAY ROAD
COMFORT, TEXAS 78013
PH: 830-377-2492
FIRM NO. 10193963

LJA Engineering, Inc.
2700 La Frontera Blvd.
Suite 200
Round Rock, Texas 78681
Phone 512.439.4700
Fax 512.439.4716
FRB-F-1386

Date\Time : Thu, 06 Jun 2024 – 9:42am
Path\Name : S:\Survey Jobs\2024\24-245 1601 County Road 136 Hutto – Justin Job\Hutto Limmer Retail.dwg

HUTTO LIMMER RETAIL

A FINAL PLAT OF 4.170 ACRES OUT OF THE E.W. FRAME SURVEY, ABSTRACT NO. 798, THE PATRICK O'DAUGHERTY SURVEY, ABSTRACT NO. 184, AND THE EDWARD RYAN SURVEY, COVERT 79, WILLIAMSON COUNTY, TEXAS, BEING THAT CERTAIN 4.173 ACRE TRACT CONVEYED TO LIMMER CO 132 REAL ESTATE LLC, A TEXAS LIMITED LIABILITY COMPANY BY DEED RECORDED IN DOCUMENT NO. 2023027430, OFFICIAL PUBLIC RECORDS, WILLIAMSON COUNTY, TEXAS.

DOC # _____

STATE OF TEXAS §
§ KNOW ALL MEN BY THESE PRESENTS:
COUNTY OF WILLIAMSON §

I, LIMMER CO 132 REAL ESTATE LLC, A TEXAS LIMITED LIABILITY COMPANY, SOLE OWNER OF THE CERTAIN 4.173 ACRE TRACT OF LAND SHOWN HEREON AND DESCRIBED IN DEED RECORDED IN DOCUMENT NO. 2023027430 OF THE OFFICIAL PUBLIC RECORDS OF WILLIAMSON COUNTY, TEXAS AND DO HEREBY STATE THAT THERE ARE NO LIEN HOLDERS OF THE CERTAIN TRACT OF LAND, AND DO HEREBY REPLAT SAID TRACT AS SHOWN HEREON, AND DO HEREBY CONSENT TO ALL PLAT NOTE REQUIREMENTS SHOWN HEREON, AND DO HEREBY DEDICATE TO THE CITY OF HUTTO THE STREETS, ALLEYS, RIGHT-OF-WAYS, EASEMENTS AND PUBLIC PLACES SHOWN HEREON FOR SUCH PUBLIC PURPOSES AS THE CITY OF HUTTO MAY DEEM APPROPRIATE, THIS SUBDIVISION IS TO BE KNOW AS

HUTTO LIMMER RETAIL

TO CERTIFY WHICH, WITNESS BY MY HAND THIS ___ DAY OF _____, A.D., 2024.

BY: _____
MOIZ MAKNOJIA MANGER OF
LIMMER CO 132 REAL ESTATE LLC, A TEXAS LIMITED LIABILITY COMPANY
4406 LOGAN RIDGE DR
CEDAR PARK, TEXAS 78613

STATE OF TEXAS §
COUNTY OF TRAVIS §

BEFORE ME, THE UNDERSIGNED AUTHORITY, ON THIS DAY PERSONALLY APPEARED MOIZ MAKNOJIA, KNOWN TO ME TO BE THE PERSON WHOSE NAME IS SUBSCRIBED TO THE FOREGOING INSTRUMENT, AND ACKNOWLEDGED TO ME THAT THEY EXECUTED THE SAME FOR THE PURPOSES AND CONSIDERATIONS THEREIN EXPRESSED AND IN THE CAPACITY THEREIN STATED.

GIVEN UNDER MY HAND AND SEAL OF OFFICE THIS ___ DAY OF _____, A.D., 2024.

_____
NOTARY PUBLIC IN AND FOR
THE STATE OF TEXAS

STATE OF TEXAS §
§ KNOW ALL MEN BY THESE PRESENTS:
COUNTY OF WILLIAMSON §

THAT I, JUSTIN C. MADDING, REGISTERED PROFESSIONAL ENGINEER IN THE STATE OF TEXAS, DO HEREBY CERTIFY THAT THIS PLAT IS IN COMPLIES WITH THE CODES AND ORDINANCES OF THE CITY OF HUTTO, TEXAS.

TO CERTIFY WHICH, WITNESS BY MY HAND THIS ___ DAY OF _____, A.D., 2024.

_____ _____
JUSTIN C. MADDING DATE
REGISTERED PROFESSIONAL ENGINEER NO. 122139
LJA ENGINEERING, INC.
2700 LA FRONTERA BOULEVARD
SUITE 200
ROUND ROCK, TEXAS 78681
TBPE REG. NO. F-1386



STATE OF TEXAS §
§ KNOW ALL MEN BY THESE PRESENTS:
COUNTY OF WILLIAMSON §

I, DONALD DEAN BOERNER, REGISTERED PUBLIC SURVEYOR, NO. 5207, IN THE STATE OF TEXAS, HEREBY CERTIFY THAT THIS PLAT IS TRUE AND CORRECT AND WAS PREPARED FROM AN ACTUAL SURVEY OF THE PROPERTY AND THAT PROPERTY MARKERS AND MONUMENTS WHERE PLACED UNDER MY SUPERVISION ON THE GROUND.

TO CERTIFY WHICH, WITNESS BY MY HAND THIS ___ DAY OF _____, A.D., 2024.

_____
REGISTERED PROFESSIONAL LAND SURVEYOR #5207
DONALD DEAN BOERNER
DONNIE BOERNER SURVEYING COMPANY L.P.
228 HOLIDAY ROAD
COMFORT, TEXAS 78013

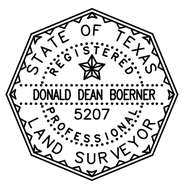

ROAD NAME AND 911 ADDRESSING APPROVAL:

ROAD NAME AND ADDRESS ASSIGNMENTS VERIFIED THIS ___ DAY OF _____, A.D., 2024.

_____
WILLIAMSON COUNTY ADDRESSING COORDINATOR

PLANNING AND ZONING COMMISSION CHAIR:

THIS PLAT WAS APPROVED FOR RECORDING BY THE PLANNING AND ZONING COMMISSION CHAIR ON

THIS ___ DAY OF _____, A.D., 2024.

_____ _____ _____ _____
PLANNING AND ZONING CHAIR DATE DEVELOPMENT SERVICES DIRECTOR DATE
SUSANNA BOYER ASHLEY BAILEY, AICP

CITY DEVELOPMENT SERVICES SIGNATURES:

THIS SUBDIVISION IS LOCATED WITHIN THE ETJ OF THE CITY OF HUTTO

THIS ___ DAY OF _____, A.D., 2024.

_____ _____ _____
RICHARD HUDSON, CHAIR DATE

PLAT NOTES:

1. WATER SERVICE FOR THIS SUBDIVISION WILL BE PROVIDED BY THE CITY OF HUTTO
2. WASTEWATER SERVICE FOR THIS SUBDIVISION WILL BE PROVIDED BY AN CITY OF HUTTO.
3. ELECTRICAL SERVICE FOR THIS SUBDIVISION WILL BE PROVIDED BY ONCOR
4. GAS SERVICE FOR THIS SUBDIVISION WILL BE PROVIDED BY ATMOS ENERGY/TEXAS COMMUNITY PROPANE
5. PHONE SERVICE SERVICE FOR THIS SUBDIVISION WILL BE PROVIDED BY TIME WARNER CABLE
6. CABLE SERVICE FOR THIS SUBDIVISION WILL BE PROVIDED BY CENTURY LINK
7. NO BUILDING, FENCING, LANDSCAPING OR STRUCTURES ARE ALLOWED WITHIN ANY DRAINAGE EASEMENT UNLESS EXPRESSLY PERMITTED BY THE CITY OF HUTTO.
8. ALL EASEMENTS ON PRIVATE PROPERTY SHALL BE MAINTAINED BY THE PROPERTY OWNER OR HIS OR HER ASSIGNS
9. A MINIMUM 10 FOOT PUBLIC ACCESS EASEMENT SHALL BE DEDICATED ADJACENT TO ALL PUBLIC RIGHT OF WAY AT SITE DEVELOPMENT PERMIT.
10. NO LOT IN THIS SUBDIVISION SHALL BE OCCUPIED UNTIL CONNECTION IS MADE TO PUBLIC WATER AND WASTEWATER UTILITIES.
11. WATER AND WASTEWATER SERVICE FOR THIS SUBDIVISION WILL BE AVAILABLE THROUGH THE CITY OF HUTTO AFTER THE APPROPRIATE WATER AND WASTEWATER SYSTEM IMPROVEMENTS ARE INSTALLED TO THIS SITE. THE CITY OF HUTTO ASSUMES NO OBLIGATIONS FOR INSTALLING AND WATER OR WASTEWATER IMPROVEMENTS REQUIRED TO SERVE THIS SITE.
12. ALL CONSTRUCTION SHALL CONFORM TO THE CITY OF HUTTO UNIFIED DEVELOPMENT CODE PLANNED UNIT DEVELOPMENT (PER ORDINANCE 0-19-05-16-118), CONSTRUCTION STANDARDS, AND GENERALLY ACCEPTED ENGINEERING PRACTICES.
13. ALL OPEN SPACE/DRAINAGE EASEMENTS/PUBLIC UTILITY EASEMENTS WILL BE MAINTAINED BY THE PROPERTY OWNER
14. SLAB ELEVATIONS SHALL BE BUILT AT LEAST ONE (1) FOOT ABOVE THE SURROUNDING GROUND AND SHALL BE GRADED AWAY FROM THE STRUCTURE AT A SLOPE OF ½" PER FOOT FOR A DISTANCE OF AT LEAST TEN (10) FEET
15. THIS TRACT IS NOT LOCATED WITHIN THE EDWARDS AQUIFER RECHARGE ZONE.

FLOODPLAIN NOTE:

NO LOT IN THIS SUBDIVISION IS ENCROACHED BY ANY SPECIAL FLOOD HAZARD AREA INUNDATED BY THE 100 YEAR FLOOD AS IDENTIFIED BY THE U.S. FEDERAL EMERGENCY MANAGEMENT AGENCY (F.E.M.A. FLOOD INSURANCE RATE MAP, COMMUNITY PANEL NUMBER 48491C0175E, EFFECTIVE DATE SEPTEMBER 26, 2008, FOR WILLIAMSON COUNTY, TEXAS, AND INDICATES THAT THE SUBJECT TRACT LIES WITHIN ZONE "X" UNSHADED (AREAS DETERMINED TO BE OUTSIDE THE 0.2% ANNUAL CHANCE FLOODPLAIN).

TXDOT NOTES:

1. FOR RESIDENTIAL DEVELOPMENT DIRECTLY ADJACENT TO STATE RIGHT OF WAY, THE DEVELOPER SHALL BE RESPONSIBLE FOR ADEQUATE SET-BACK AND/OR SOUND ABATEMENT MEASURES FOR FUTURE NOISE MITIGATION.
2. MAXIMUM ACCESS POINTS TO STATE HIGHWAY FROM THIS PROPERTY WILL BE REGULATED AS DIRECTED BY "ACCESS MANAGEMENT MANUAL".
3. IF SIDEWALKS ARE REQUIRED BY APPROPRIATE CITY ORDINANCE, A SIDEWALK PERMIT MUST BE APPROVED BY TXDOT PRIOR TO CONSTRUCTION WITHIN STATE RIGHT-OF-WAY. LOCATIONS OF SIDEWALKS WITHIN STATE RIGHT-OF-WAY SHALL BE DIRECTED BY TXDOT.

GENERAL NOTES:

1. COURSES AND DISTANCES SHOWN HEREON ARE RECORD BASED ON DEED RECORDED IN DOCUMENT NO. 2023027430, OFFICIAL PUBLIC RECORDS, WILLIAMSON COUNTY, TEXAS
2. BASIS OF BEARING WAS ESTABLISHED FROM THE STATE PLANE COORDINATE SYSTEM, NORTH AMERICAN DATUM OF 1983, TEXAS CENTRAL ZONE.
3. UNLESS OTHERWISE SHOWN ON THIS PLAT, PROPERTY CORNERS ARE MONUMENTED WITH A 1/2" STEEL ROD WITH AN ORANGE "RPLS 5207" PLASTIC CAP

STATE OF TEXAS §
§ KNOW ALL MEN BY THESE PRESENTS:
COUNTY OF WILLIAMSON §

I, NANCY E. RISTER, CLERK OF THE COUNTY COURT OF THE SAID COUNTY, DO HEREBY CERTIFY THAT THE FOREGOING INSTRUMENT IN WRITING, WITH ITS CERTIFICATE OF AUTHENTICATION, WAS FILED FOR RECORD IN MY OFFICE ON THE __ DAY OF _____, 2024 A.D. AT _____ O'CLOCK __.M. AND DULY RECORDED THIS __ DAY OF _____, 2024, A.D., AT _____ O'CLOCK __.M. IN THE OFFICIAL PUBLIC RECORDS OF SAID COUNTY, IN DOCUMENT No. _____.

TO CERTIFY WHICH, WITNESS MY HAND AND SEAL AT THE COUNTY COURT OF SAID COUNTY, AT MY OFFICE IN GEORGETOWN, TEXAS, THE DATE LAST SHOWN ABOVE WRITTEN

NANCY E. RISTER, CLERK COUNTY COURT
OF WILLIAMSON COUNTY, TEXAS

BY: _____ DEPUTY

DONNIE BOERNER SURVEYING COMPANY L.P.
228 HOLIDAY ROAD
COMFORT, TEXAS 78013
PH: 830-377-2492 FIRM NO. 10193963

LJA Engineering, Inc.
2700 La Frontera Blvd.
Suite 200
Round Rock, Texas 78681
Phone 512.439.4700
Fax 512.439.4716
FRB-F-1386

HUTTO LIMMER RETAIL

A FINAL PLAT OF 4.170 ACRES OUT OF THE E.W. FRAME SURVEY, ABSTRACT NO. 798, THE PATRICK O'DAUGHERTY SURVEY, ABSTRACT NO. 184, AND THE EDWARD RYAN SURVEY, COVERT 79, WILLIAMSON COUNTY, TEXAS, BEING THAT CERTAIN 4.173 ACRE TRACT CONVEYED TO LIMMER CO 132 REAL ESTATE LLC, A TEXAS LIMITED LIABILITY COMPANY BY DEED RECORDED IN DOCUMENT NO. 2023027430, OFFICIAL PUBLIC RECORDS, WILLIAMSON COUNTY, TEXAS.

DOC # _____

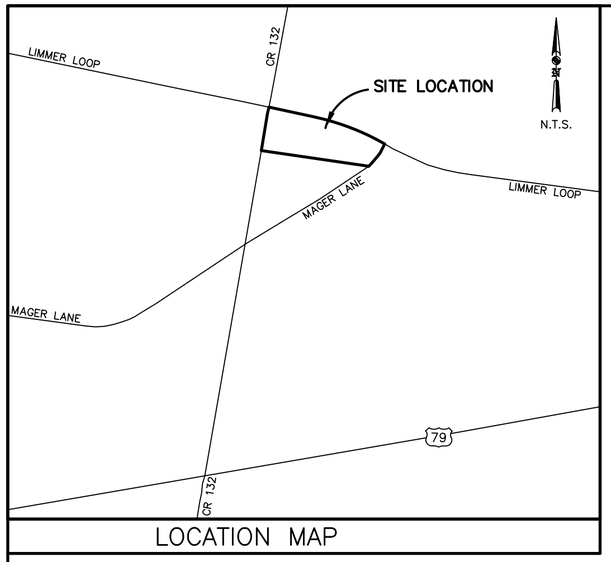

LOCATION MAP

CURVE DATE: C1
R=1355.00' (1355.00' RECORD)
D=18°32'20"
L=438.43' (438.41' RECORD)
Cd=S 68°45'16" E 436.52'

CURVE DATE: C2
R=955.00' (955.00' RECORD)
D=06°38'09"
L=110.60' (110.48' RECORD)
Cd=S 39°12'12" W 110.54'

NORTH

SCALE: 1" = 60'

0 60 120 180

OWNERS: LIMMER CO 132 REAL ESTATE LLC,
A TEXAS LIMITED LIABILITY COMPANY

ACREAGE: 4.170 ACRES

NUMBER OF LOTS: 2

LINEAR FEET OF NEW STREETS: 0'

SUBMITTAL DATE: __-__-__2024

PATENT SURVEY: E.W. FRAME SURVEY, ABSTRACT NO. 798
PATRICK O'DAUGHERTY SURVEY, ABSTRACT NO. 184

ENGINEER: JUSTIN C. MADDING
REGISTERED PROFESSIONAL ENGINEER NO. 122139
LJA ENGINEERING, INC.
2700 LA FRONTERA BOULEVARD
SUITE 200
ROUND ROCK, TEXAS 78681
TBPE REG. NO. F-1386

SURVEYOR: DONALD DEAN BOERNER
REGISTERED PROFESSIONAL LAND SURVEYOR #5207
DONNIE BOERNER SURVEYING COMPANY L.P.
228 HOLIDAY ROAD
COMFORT, TEXAS 78013

BENCHMARK DESCRIPTION & ELEVATION WITH VERTICAL DATUM AND GEOID:

BENCHMARK 1: ETCHED SQUARE IN CONCRETE
BASE OF POWER POLE
ELEVATION=672.85 FT.
N=10176324.797
E=3181081.124
NAD83 / NAVD88 / GEOID12B

HUTTO ECONOMIC DEVELOPMENT CORPORATION
DOCUMENT NO. 2023047850
OFFICIAL PUBLIC RECORDS
TRACT B – 22.24 ACRES

HUTTO ECONOMIC DEVELOPMENT CORPORATION
DOCUMENT NO. 2023047850
OFFICIAL PUBLIC RECORDS
TRACT A – 63.15 ACRES

CLIFFORD W. ALBERT ET AL.
DOCUMENT NO. 2013029401
OFFICIAL PUBLIC RECORDS
DESCRIBED IN VOLUME 127 PAGES 448–449
DEED RECORDS
REMAINING PORTION OF A 88.5 ACRES

PATRICK O'DAUGHERTY SURVEY ABSTRACT NO. 184

O.R. FRAME SURVEY ABSTRACT NO. 798

JOSIAS B. BEALLE SURVEY ABSTRACT NO. 97

APPROXIMATE SURVEY LINE

N 54°34'33" 68.01'
(N 54°35'04" E 68.01' RECORD)

FOUND STEEL ROD WITH A RED "CAPITAL SURVEYING CO INC" PLASTIC CAP

FOUND STEEL ROD WITH A RED "CAPITAL SURVEYING CO INC" PLASTIC CAP

FOUND STEEL ROD WITH A DESTROYED RED CAP

35.1'

59.04'

44.1'

8.97'

S 77°55'08" E 264.32'
(S 77°55'09" E 264.35' RECORD)

174.00'

90.32'

90' RIGHT-OF-WAY
DOCUMENT NO. 2003112454
OFFICIAL PUBLIC RECORDS

FOUND 1/2" STEEL ROD

25' BUILDING SETBACK LINE

LIMMER LOOP

C1

N 07°32'40" E 296.79'

N 07°45'41" E 243.07'
(N 07°45'01" E 243.02' RECORD)

N 07°25'02" E 282.86'

10' PUBLIC UTILITY EASEMENT HEREBY DEDICATED

25' BUILDING SETBACK LINE

VARIABLE WIDTH ROAD WIDENING EASEMENT HEREBY DEDICATED

LOT 1
1.358 ACRES

S 12°04'51" W 274.60'

LOT 2
2.812 ACRES

BENEFICIARY: (LONE STAR GAS COMPANY)
APPROXIMATE CENTERLINE OF RIGHT-OF-WAY AND EASEMENT
DOCUMENT NO. 2022129464
OFFICIAL PUBLIC RECORDS

FOUND 1/2" STEEL ROD

S 12°38'09" 68.57'
(S 12°32'05" E 68.60' RECORD)

FOUND STEEL ROD WITH AN ALUMINUM "S.A.M. INC. CONTROL" STAMPED CAP

34.2'

44.75'

FOUND STEEL ROD WITH AN YELLOW "WALKER 5283" PLASTIC CAP

157.67'

BENEFICIARY: (ONCOR ELECTRIC DELIVERY COMPANY LLC)
APPROXIMATE CENTERLINE OF EASEMENT AND RIGHT-OF-WAY
DOCUMENT NO. 2022129464
OFFICIAL PUBLIC RECORDS

50' PER ONCOR

BENCHMARK 1

50' PER ONCOR

BENEFICIARY: (LCRA TRANSMISSION SERVICES CORPORATION)
ELECTRICAL LINE EASEMENT AND RIGHT-OF-WAY
DOCUMENT NO. 2010040873
OFFICIAL PUBLIC RECORDS
PART 2 – 0.483 ACRES

FOUND 1/2" STEEL ROD

BENEFICIARY: (ENTERPRISE CRUDE PIPELINE LLC)
PERMANENT EASEMENT
DOCUMENT NO. 2017010602
OFFICIAL PUBLIC RECORDS
PART 2 – 0.03 ACRES

25' BUILDING SETBACK LINE

C2

N 82°59'53" W 703.94'
(N 82°59'40" W 704.00' RECORD)

501.52'

FOUND 1/2" STEEL ROD

FOUND 1/2" STEEL ROD

COUNTY ROAD 132

VARIABLE WIDTH ROAD WIDENING EASEMENT
DOCUMENT NO. 2018046065
OFFICIAL PUBLIC RECORDS

LOT ONE
BLOCK A

SINGH SUBDIVISION
DOCUMENT NO. 2018046065
OFFICIAL PUBLIC RECORDS

90' RIGHT-OF-WAY
DOCUMENT NO. 2003112454
OFFICIAL PUBLIC RECORDS

WILLIAMSON COUNTY
DOCUMENT NO. 2006069304
OFFICIAL PUBLIC RECORDS
0.343 ACRES

REMAINS OF ABANDONED COUNTY ROAD NO. 136
UNKNOWN OWNERSHIP

MAGER LANE

LYNNE SHAPIRO COVERT, ET. AL
DOCUMENT NO. 2024000778
OFFICIAL PUBLIC RECORDS
87.23 ACRES

APPROXIMATE SURVEY LINE

APPROXIMATE SURVEY LINE

DONNIE BOERNER SURVEYING COMPANY L.P.
228 HOLIDAY ROAD
COMFORT, TEXAS 78013
PH: 830-377-2492
FIRM NO. 10193963

LJA Engineering, Inc.
2700 La Frontera Blvd.
Suite 200
Round Rock, Texas 78681
Phone 512.439.4700
Fax 512.439.4716
FRB-F-1386

Date\Time : Thu, 06 Jun 2024 – 9:42am
Path\Name : S:\Survey Jobs\2024\24-245 1601 County Road 136 Hutto – Justin Job\Hutto Limmer Retail.dwg

HUTTO LIMMER RETAIL

A FINAL PLAT OF 4.170 ACRES OUT OF THE E.W. FRAME SURVEY, ABSTRACT NO. 798, THE PATRICK O'DAUGHERTY SURVEY, ABSTRACT NO. 184, AND THE EDWARD RYAN SURVEY, COVERT 79, WILLIAMSON COUNTY, TEXAS, BEING THAT CERTAIN 4.173 ACRE TRACT CONVEYED TO LIMMER CO 132 REAL ESTATE LLC, A TEXAS LIMITED LIABILITY COMPANY BY DEED RECORDED IN DOCUMENT NO. 2023027430, OFFICIAL PUBLIC RECORDS, WILLIAMSON COUNTY, TEXAS.

DOC # _____

STATE OF TEXAS §
§ KNOW ALL MEN BY THESE PRESENTS:
COUNTY OF WILLIAMSON §

I, LIMMER CO 132 REAL ESTATE LLC, A TEXAS LIMITED LIABILITY COMPANY, SOLE OWNER OF THE CERTAIN 4.173 ACRE TRACT OF LAND SHOWN HEREON AND DESCRIBED IN DEED RECORDED IN DOCUMENT NO. 2023027430 OF THE OFFICIAL PUBLIC RECORDS OF WILLIAMSON COUNTY, TEXAS AND DO HEREBY STATE THAT THERE ARE NO LIEN HOLDERS OF THE CERTAIN TRACT OF LAND, AND DO HEREBY REPLAT SAID TRACT AS SHOWN HEREON, AND DO HEREBY CONSENT TO ALL PLAT NOTE REQUIREMENTS SHOWN HEREON, AND DO HEREBY DEDICATE TO THE CITY OF HUTTO THE STREETS, ALLEYS, RIGHT-OF-WAYS, EASEMENTS AND PUBLIC PLACES SHOWN HEREON FOR SUCH PUBLIC PURPOSES AS THE CITY OF HUTTO MAY DEEM APPROPRIATE, THIS SUBDIVISION IS TO BE KNOW AS

HUTTO LIMMER RETAIL

TO CERTIFY WHICH, WITNESS BY MY HAND THIS ___ DAY OF _____, A.D., 2024.

BY: _____
MOIZ MAKNOJIA MANGER OF
LIMMER CO 132 REAL ESTATE LLC, A TEXAS LIMITED LIABILITY COMPANY
4406 LOGAN RIDGE DR
CEDAR PARK, TEXAS 78613

STATE OF TEXAS §
COUNTY OF TRAVIS §

BEFORE ME, THE UNDERSIGNED AUTHORITY, ON THIS DAY PERSONALLY APPEARED MOIZ MAKNOJIA, KNOWN TO ME TO BE THE PERSON WHOSE NAME IS SUBSCRIBED TO THE FOREGOING INSTRUMENT, AND ACKNOWLEDGED TO ME THAT THEY EXECUTED THE SAME FOR THE PURPOSES AND CONSIDERATIONS THEREIN EXPRESSED AND IN THE CAPACITY THEREIN STATED.

GIVEN UNDER MY HAND AND SEAL OF OFFICE THIS ___ DAY OF _____, A.D., 2024.

_____
NOTARY PUBLIC IN AND FOR
THE STATE OF TEXAS

STATE OF TEXAS §
§ KNOW ALL MEN BY THESE PRESENTS:
COUNTY OF WILLIAMSON §

THAT I, JUSTIN C. MADDING, REGISTERED PROFESSIONAL ENGINEER IN THE STATE OF TEXAS, DO HEREBY CERTIFY THAT THIS PLAT IS IN COMPLIES WITH THE CODES AND ORDINANCES OF THE CITY OF HUTTO, TEXAS.

TO CERTIFY WHICH, WITNESS BY MY HAND THIS ___ DAY OF _____, A.D., 2024.

_____ _____
JUSTIN C. MADDING DATE
REGISTERED PROFESSIONAL ENGINEER NO. 122139
LJA ENGINEERING, INC.
2700 LA FRONTERA BOULEVARD
SUITE 200
ROUND ROCK, TEXAS 78681
TBPE REG. NO. F-1386



STATE OF TEXAS §
§ KNOW ALL MEN BY THESE PRESENTS:
COUNTY OF WILLIAMSON §

I, DONALD DEAN BOERNER, REGISTERED PUBLIC SURVEYOR, NO. 5207, IN THE STATE OF TEXAS, HEREBY CERTIFY THAT THIS PLAT IS TRUE AND CORRECT AND WAS PREPARED FROM AN ACTUAL SURVEY OF THE PROPERTY AND THAT PROPERTY MARKERS AND MONUMENTS WHERE PLACED UNDER MY SUPERVISION ON THE GROUND.

TO CERTIFY WHICH, WITNESS BY MY HAND THIS ___ DAY OF _____, A.D., 2024.

_____
REGISTERED PROFESSIONAL LAND SURVEYOR #5207
DONALD DEAN BOERNER
DONNIE BOERNER SURVEYING COMPANY L.P.
228 HOLIDAY ROAD
COMFORT, TEXAS 78013

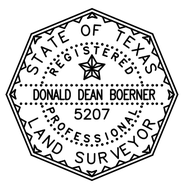

ROAD NAME AND 911 ADDRESSING APPROVAL:

ROAD NAME AND ADDRESS ASSIGNMENTS VERIFIED THIS ___ DAY OF _____, A.D., 2024.

_____
WILLIAMSON COUNTY ADDRESSING COORDINATOR

PLANNING AND ZONING COMMISSION CHAIR:

THIS PLAT WAS APPROVED FOR RECORDING BY THE PLANNING AND ZONING COMMISSION CHAIR ON

THIS ___ DAY OF _____, A.D., 2024.

_____ _____ _____ _____
PLANNING AND ZONING CHAIR DATE DEVELOPMENT SERVICES DIRECTOR DATE
SUSANNA BOYER ASHLEY BAILEY, AICP

CITY DEVELOPMENT SERVICES SIGNATURES:

THIS SUBDIVISION IS LOCATED WITHIN THE ETJ OF THE CITY OF HUTTO

THIS ___ DAY OF _____, A.D., 2024.

_____ _____ _____
RICHARD HUDSON, CHAIR DATE

PLAT NOTES:

1. WATER SERVICE FOR THIS SUBDIVISION WILL BE PROVIDED BY THE CITY OF HUTTO
2. WASTEWATER SERVICE FOR THIS SUBDIVISION WILL BE PROVIDED BY AN CITY OF HUTTO.
3. ELECTRICAL SERVICE FOR THIS SUBDIVISION WILL BE PROVIDED BY ONCOR
4. GAS SERVICE FOR THIS SUBDIVISION WILL BE PROVIDED BY ATMOS ENERGY/TEXAS COMMUNITY PROPANE
5. PHONE SERVICE SERVICE FOR THIS SUBDIVISION WILL BE PROVIDED BY TIME WARNER CABLE
6. CABLE SERVICE FOR THIS SUBDIVISION WILL BE PROVIDED BY CENTURY LINK
7. NO BUILDING, FENCING, LANDSCAPING OR STRUCTURES ARE ALLOWED WITHIN ANY DRAINAGE EASEMENT UNLESS EXPRESSLY PERMITTED BY THE CITY OF HUTTO.
8. ALL EASEMENTS ON PRIVATE PROPERTY SHALL BE MAINTAINED BY THE PROPERTY OWNER OR HIS OR HER ASSIGNS
9. A MINIMUM 10 FOOT PUBLIC ACCESS EASEMENT SHALL BE DEDICATED ADJACENT TO ALL PUBLIC RIGHT OF WAY AT SITE DEVELOPMENT PERMIT.
10. NO LOT IN THIS SUBDIVISION SHALL BE OCCUPIED UNTIL CONNECTION IS MADE TO PUBLIC WATER AND WASTEWATER UTILITIES.
11. WATER AND WASTEWATER SERVICE FOR THIS SUBDIVISION WILL BE AVAILABLE THROUGH THE CITY OF HUTTO AFTER THE APPROPRIATE WATER AND WASTEWATER SYSTEM IMPROVEMENTS ARE INSTALLED TO THIS SITE. THE CITY OF HUTTO ASSUMES NO OBLIGATIONS FOR INSTALLING AND WATER OR WASTEWATER IMPROVEMENTS REQUIRED TO SERVE THIS SITE.
12. ALL CONSTRUCTION SHALL CONFORM TO THE CITY OF HUTTO UNIFIED DEVELOPMENT CODE PLANNED UNIT DEVELOPMENT (PER ORDINANCE 0-19-05-16-118), CONSTRUCTION STANDARDS, AND GENERALLY ACCEPTED ENGINEERING PRACTICES.
13. ALL OPEN SPACE/DRAINAGE EASEMENTS/PUBLIC UTILITY EASEMENTS WILL BE MAINTAINED BY THE PROPERTY OWNER
14. SLAB ELEVATIONS SHALL BE BUILT AT LEAST ONE (1) FOOT ABOVE THE SURROUNDING GROUND AND SHALL BE GRADED AWAY FROM THE STRUCTURE AT A SLOPE OF ½" PER FOOT FOR A DISTANCE OF AT LEAST TEN (10) FEET
15. THIS TRACT IS NOT LOCATED WITHIN THE EDWARDS AQUIFER RECHARGE ZONE.

FLOODPLAIN NOTE:

NO LOT IN THIS SUBDIVISION IS ENCROACHED BY ANY SPECIAL FLOOD HAZARD AREA INUNDATED BY THE 100 YEAR FLOOD AS IDENTIFIED BY THE U.S. FEDERAL EMERGENCY MANAGEMENT AGENCY (F.E.M.A. FLOOD INSURANCE RATE MAP, COMMUNITY PANEL NUMBER 48491C0175E, EFFECTIVE DATE SEPTEMBER 26, 2008, FOR WILLIAMSON COUNTY, TEXAS, AND INDICATES THAT THE SUBJECT TRACT LIES WITHIN ZONE "X" UNSHADED (AREAS DETERMINED TO BE OUTSIDE THE 0.2% ANNUAL CHANCE FLOODPLAIN).

TXDOT NOTES:

1. FOR RESIDENTIAL DEVELOPMENT DIRECTLY ADJACENT TO STATE RIGHT OF WAY, THE DEVELOPER SHALL BE RESPONSIBLE FOR ADEQUATE SET-BACK AND/OR SOUND ABATEMENT MEASURES FOR FUTURE NOISE MITIGATION.
2. MAXIMUM ACCESS POINTS TO STATE HIGHWAY FROM THIS PROPERTY WILL BE REGULATED AS DIRECTED BY "ACCESS MANAGEMENT MANUAL".
3. IF SIDEWALKS ARE REQUIRED BY APPROPRIATE CITY ORDINANCE, A SIDEWALK PERMIT MUST BE APPROVED BY TXDOT PRIOR TO CONSTRUCTION WITHIN STATE RIGHT-OF-WAY. LOCATIONS OF SIDEWALKS WITHIN STATE RIGHT-OF-WAY SHALL BE DIRECTED BY TXDOT.

GENERAL NOTES:

1. COURSES AND DISTANCES SHOWN HEREON ARE RECORD BASED ON DEED RECORDED IN DOCUMENT NO. 2023027430, OFFICIAL PUBLIC RECORDS, WILLIAMSON COUNTY, TEXAS
2. BASIS OF BEARING WAS ESTABLISHED FROM THE STATE PLANE COORDINATE SYSTEM, NORTH AMERICAN DATUM OF 1983, TEXAS CENTRAL ZONE.
3. UNLESS OTHERWISE SHOWN ON THIS PLAT, PROPERTY CORNERS ARE MONUMENTED WITH A 1/2" STEEL ROD WITH AN ORANGE "RPLS 5207" PLASTIC CAP

STATE OF TEXAS §
§ KNOW ALL MEN BY THESE PRESENTS:
COUNTY OF WILLIAMSON §

I, NANCY E. RISTER, CLERK OF THE COUNTY COURT OF THE SAID COUNTY, DO HEREBY CERTIFY THAT THE FOREGOING INSTRUMENT IN WRITING, WITH ITS CERTIFICATE OF AUTHENTICATION, WAS FILED FOR RECORD IN MY OFFICE ON THE __ DAY OF _____, 2024 A.D. AT _____ O'CLOCK __.M. AND DULY RECORDED THIS __ DAY OF _____, 2024, A.D., AT _____ O'CLOCK __.M. IN THE OFFICIAL PUBLIC RECORDS OF SAID COUNTY, IN DOCUMENT No. _____.

TO CERTIFY WHICH, WITNESS MY HAND AND SEAL AT THE COUNTY COURT OF SAID COUNTY, AT MY OFFICE IN GEORGETOWN, TEXAS, THE DATE LAST SHOWN ABOVE WRITTEN

NANCY E. RISTER, CLERK COUNTY COURT
OF WILLIAMSON COUNTY, TEXAS

BY: _____ DEPUTY

DONNIE BOERNER SURVEYING COMPANY L.P.
228 HOLIDAY ROAD
COMFORT, TEXAS 78013
PH: 830-377-2492 FIRM NO. 10193963

LJA Engineering, Inc.
2700 La Frontera Blvd.
Suite 200
Round Rock, Texas 78681
Phone 512.439.4700
Fax 512.439.4716
FRB-F-1386

ELECTRONICALLY RECORDED 2023027430
Williamson County, Texas Total Pages: 7

Chicago Title
GF# CTA2300344
BNW

General Warranty Deed

NOTICE OF CONFIDENTIALITY RIGHTS

IF YOU ARE A NATURAL PERSON, YOU MAY REMOVE OR STRIKE ANY OF THE FOLLOWING INFORMATION FROM ANY INSTRUMENT THAT TRANSFERS AN INTEREST IN REAL PROPERTY BEFORE IT IS FILED FOR RECORD IN THE PUBLIC RECORDS: YOUR SOCIAL SECURITY NUMBER OR YOUR DRIVER'S LICENSE NUMBER.

Date: April 4, 2023

Grantor: Clifford W. Albert and Sharon E. Albert, Trustees of the Clifford W. and Sharon E. Albert Living Trust dated March 21, 2011, William E. Albert and Frances Albert

Grantor's Mailing Address: 550 BLUE HOLE ROAD, BEEBE, AR 72012

Grantee: Limmer Co 132 Real Estate LLC, a Texas limited liability company

Grantee's Mailing Address: 44016 Logan Ridge Dr, Cedar Park, TX 78613

Consideration: Cash and other good and valuable consideration.

Property (including any improvements):

All of that 4.173 acres of land, more or less, out of the E.W. FRAME SURVEY, ABSTRACT NO. 798, PATRICK O'DAUGHERTY SURVEY, ABSTRACT NO. 184 and EDWARD RYAN SURVEY COVERT 79 in Williamson County, Texas, being a portion of the 88.5 acres of land, called First Tract, conveyed to Clifford W. Albert and Sharon W. Albert, Trustees of the Clifford W. and Sharon E. Albert Living Trust, in the Special Warranty Deed recorded in Document No. 2013029401, of the Official Public Records of Williamson County, Texas. Said tract of land is shown by metes and bounds in the Special Warranty Deed of The Hutto Bypass Right of Way recorded in Document No. 2003112454, of the Official Public Records of Williamson County, Texas and more particularly described in **Exhibit "A"** attached hereto and incorporated herein by reference.

Reservations from Conveyance: None

Exceptions to Conveyance and Warranty:

Liens described as part of the Consideration and any other liens described in this deed as being either assumed or subject to which title is taken; validly existing easements, rights-of-way, and prescriptive rights, whether of record or not; all presently recorded and

Unofficial Document

validly existing restrictions, reservations, covenants, conditions, oil and gas leases, mineral interests outstanding in persons other than Grantor, and other instruments, other than conveyances of the surface fee estate, that affect the Property; validly existing rights of adjoining owners in any walls and fences situated on a common boundary; any discrepancies, conflicts, or shortages in area or boundary lines; any encroachments or overlapping of improvements; all rights, obligations, and other matters arising from and existing by reason of any water, utility, road, or improvement districts which affect the Property; standby fees, taxes, and assessments by any taxing authority for the current year, which Grantee assumes and agrees to pay, and subsequent assessments for that and prior years due to change in land usage, ownership, or both, the payment of which Grantee also assumes.

Grantor, for the Consideration and subject to the Reservations from Conveyance and the Exceptions to Conveyance and Warranty, grants, sells, and conveys to Grantee the Property, together with all and singular the rights and appurtenances thereto in any way belonging, to have and to hold it to Grantee and Grantee's heirs, successors, and assigns forever. Grantor warrants that Grantor owns and has legal and equitable title to all of the Property in fee simple, has the right to convey the Property, and binds Grantor and Grantor's heirs and successors to warrant and forever defend all and singular the Property to Grantee and Grantee's heirs, successors, and assigns against every person whomsoever lawfully claiming or to claim the same or any part thereof, except as to the Reservations from Conveyance and the Exceptions to Conveyance and Warranty.

When the context requires, singular nouns and pronouns include the plural.

NOTICE: This instrument was prepared by Hancock McGill & Bleau, LLLP (HMB) at the request of Chicago Title or the parties using information provided by the title company and the parties. Unless we have been provided with a copy of any contracts related to this transaction or been informed of any reservations required by the Grantor, the reservations will not be included in this warranty deed and by accepting this deed, all parties release HMB from any liability resulting from the failure to include undisclosed reservations. We have not investigated or verified information provided to us and do not warrant the validity of the information or quality of title to the real estate described above. **We do not represent the parties named in this instrument. The parties should seek independent legal counsel for advice concerning the effect and consequences of this instrument.**

Clifford W Albert, TRUSTEE OF THE CLIFFORD W. ALBERT AND SHARON E. ALBERT LIVING TRUST DATED MARCH 21, 2011

Clifford W. Albert, Trustee of the Clifford W. and Sharon E. Albert Living Trust dated March 21, 2011

Sharon E Albert Trustee

Sharon E. Albert, Trustee, of the Clifford W. and Sharon E. Albert Living Trust dated March 21, 2011

Of The Clifford W and Sharon E Albert Living Trust dated March 21, 2011

Unofficial Document

William E. Albert

Frances Albert

State of
County of

This document was acknowledged before me on ____, 2023 by Clifford W. Albert, Trustee of the Clifford W. and Sharon E. Albert Living Trust dated March 21, 2011.

Notary Public, State of

State of
County of

This document was acknowledged before me on ____, 2023 by Sharon E. Albert, Trustee, of the Clifford W. and Sharon E. Albert Living Trust dated March 21, 2011.

Notary Public, State of

State of Texas
County of Williamson

This document was acknowledged before me on April 4, 2023 by William E. Albert.

Notary Public, State of Texas

BECKY VAN WESTEN
Notary ID # 1162152-3
My Commission Expires
05-19-2023

Unofficial Document

William E. Albert

Frances Albert

State of Arkansas
County of White

This document was acknowledged before me on April 4, 2023 by Clifford W. Albert, Trustee of the Clifford W. and Sharon E. Albert Living Trust dated March 21, 2011.

Lyndee Reed
Notary Public, State of AR

LYNDEE REED
MY COMM. EXPIRES 01-20-2026
NOTARY PUBLIC
COMM # 12345948
WHITE COUNTY, ARKANSAS

State of Arkansas
County of White

This document was acknowledged before me on April 4, 2023 by Sharon E. Albert, Trustee, of the Clifford W. and Sharon E. Albert Living Trust dated March 21, 2011.

Lyndee Reed
Notary Public, State of AR

LYNDEE REED
MY COMM. EXPIRES 01-20-2026
NOTARY PUBLIC
COMM # 12345948
WHITE COUNTY, ARKANSAS

State of Texas
County of Williamson

This document was acknowledged before me on ____, 2023 by William E. Albert.

Notary Public, State of Texas

Unofficial Document

State of Texas
County of Williamson

This document was acknowledged before me on April 4, 2023 by Frances Albert.

Notary Public, State of Texas

BECKY VAN WESTEN
Notary ID # 1162152-3
My Commission Expires
05-19-2023

Prepared By:
Hancock McGill & Bleau, L.L.L.P.
Attorneys at Law

AFTER RECORDING RETURN TO:

Unofficial Document

SURVEY NO. 2353

FIELD NOTES OF
4.173 ACRES OF LAND
OUT OF THE E.W. FRAME SURVEY, ABSTRACT NO. 798,
PATRICK O'DAUGHERTY SURVEY, ABSTRACT NO. 184
AND EDWARD RYAN SURVEY COVERT NO. 79,
WILLIAMSON COUNTY, TEXAS

METES AND BOUNDS DESCRIPTION

ALL OF THAT 4.173 ACRES OF LAND, MORE OR LESS, OUT OF THE E.W. FRAME SURVEY, ABSTRACT NO. 798, PATRICK O'DAUGHERTY SURVEY, ABSTRACT NO. 184 AND EDWARD RYAN SURVEY COVERT 79 IN WILLIAMSON COUNTY, TEXAS, BEING A PORTION OF THE 88.5 ACRES OF LAND, CALLED FIRST TRACT, CONVEYED TO CLIFFORD W. ALBERT AND SHARON E. ALBERT, TRUSTEES OF THE CLIFFORD W. AND SHARON E. ALBERT LIVING TRUST, IN THE SPECIAL WARRANTY DEED RECORDED IN DOCUMENT NO. 2013029401 OFTHE OFFICIAL PUBLIC RECORDS OF WILLIAMSON COUNTY, TEXAS. SAID TRACT OF LAND IS SHOWN BY METES AND BOUNDS IN THE SPECIAL WARRANTY DEED OF THE HUTTO BYPASS RIGHT OF WAY RECORDED IN DOCUMENT NO. 2003112454 OF THE OFFICIAL PUBLIC RECORDS OF WILLIAMSON COUNTY, TEXAS. SAID TRACT OF LAND HAVING BEEN SURVEYED ON THE GROUND UNDER MY SUPERVISION AND BEING MORE PARTICULARLY DESCRIBED BY METES AND BOUNDS AS FOLLOWS:

BEGINNING at a 1/2" Iron rod found with a cap stamped "Sam Inc." in the easterly Right of Way line of County Road 132 at the northwest corner of the Singh Subdivision, a subdivision recorded in Document No. 2018046065 of the Official Public Records of Williamson County, Texas, for the southwest corner of the tract herein described;

THENCE, along the easterly Right of Way line of County Road 132 and the westerly line of the tract herein described, N 07°45'01" E, a distance of 243.02 feet to a 1/2" iron rod found with a cap stamped "Capital Surveying" for the westerly northwest corner of the tract herein described;

THENCE, N 54°35'04" E, a distance of 68.01 feet to a 1/2' iron rod found with a cap stamped "Capital Surveying" in the southerly Right of Way line of Limmer Loop for the northerly northwest corner of the tract herein described;

THENCE, along the southerly Right of Way line of Limmer Loop and the northerly line of the tract herein described, the following Two (2) courses:

1. S 77°55'09" E, a distance of 264.35 feet to a 1/2" iron rod found with a cap stamped "Capital Surveying" at the beginning of a curve;
2. Along the arc of a curve to the right whose radius1355.00 feet, a chord bearing of S 68°45'36" E, an arc distance of 438.41 feet and a chord distance of 436.50 feet to a 1/2" iron rod found for the northeast corner of the tract herein described;

THENCE, S 12°32'05" E, a distance of 68.60 feet to a 1/2" iron rod found in the westerly Right of Way line of Mager Lane for the easterly corner of the tract herein described;

THENCE, along the westerly Right of Way line of Mager Lane and the easterly line of the tract herein described, along the arc of a curve to the left whose radius is 955.00 feet, a chord bearing of S 39°07' 54" W, an arc distance of 110.48 feet and a chord distance of 110.42 feet to a 1/2" iron rod found at the northeast corner of the Singh Subdivsion for the southeast corner of the tract herein described;

THENCE, along the northerly line of the Singh Subdivision and the southerly line of the tract herein described, N 82°59'40" W, passing a 1/2" iron rod found with a cap stamped "Walker" at a distance of 659.24 feet for a total distance of 704.00 feet to the Point of Beginning and containing 4.173 Acres of land, more or less, as shown on plat of survey prepared herewith.

Edward W. Bradfield
Registered Professional Land Surveyor No. 5617
State of Texas

STATE OF TEXAS
REGISTERED
EDWARD W. BRADFIELD
5617
PROFESSIONAL
LAND SURVEYOR

Unofficial Document

ELECTRONICALLY RECORDED
OFFICIAL PUBLIC RECORDS

2023027430

Pages: 7 Fee: $46.00
04/06/2023 04:26 PM
JDISHER



Nancy E. Rister, County Clerk
Williamson County,Texas

Unofficial Document

SPECIAL WARRANTY DEED

NOTICE OF CONFIDENTIALITY RIGHTS: IF YOU ARE A NATURAL PERSON, YOU MAY REMOVE OR STRIKE ANY OR ALL OF THE FOLLOWING INFORMATION FROM ANY INSTRUMENT THAT TRANSFERS AN INTEREST IN REAL PROPERTY BEFORE IT IS FILED FOR RECORD IN THE PUBLIC RECORDS: YOUR SOCIAL SECURITY NUMBER OR YOUR DRIVER'S LICENSE NUMBER.

THE STATE OF TEXAS §
§
COUNTY OF WILLIAMSON §

COTTONWOOD DEVELOPMENT CORPORATION, a local government corporation created pursuant to the provisions of Chapter 431 of the Texas Transportation Code, situated in the County of Williamson, Texas, with offices located at 500 West Live Oak, Hutto, Texas, 78634, ("Grantor"), for the consideration hereinafter specified has granted, sold and conveyed, and by these presents does grant, sell and convey, unto the **HUTTO ECONOMIC DEVELOPMENT CORPORATION,** an economic corporation created pursuant to the provisions Title 12, Subtitle C1 of the Texas Local Government Code, situated in the County of Williamson, Texas, with offices located at 500 West Live Oak, Hutto, Texas, 78634 ("Grantee"), that tract of land, together with all improvements commonly known as Parcel ID: R020270 A W0097 - BEALLE, J.B. SUR., and more fully described on **Exhibit "A"** attached hereto (the "Property"); and

WHEREAS, the Grantor took title to the Property by special warranty deed with vendor lien (the "Deed") from the City of Hutto, Texas, in February of 2020; and

WHEREAS, on November 9, 2022, in Cause No. 21-0128-C368 of the 368th Judicial District of Williamson County Texas, a Final Judgment and Order of Foreclosure was entered by the Court in which the Court held that the Grantor had valid title to the Property, that all deeds of trust and liens associated with the Deeds were valid, that a promissory note associated with the Property (the "Note") was valid and that the Property could be foreclosed; and

WHEREAS, the vendors liens and deeds of trust have been extinguished; and

WHEREAS, the Grantor finds that sale of the Property is under economic duress, as Grantor was threatened with foreclosure of this unique property, was threatened with substantial accruing interest on an inequitable and flawed Judgment which is being appealed, and was deprived its right to exemption from the payment of a supersedeas bond to stay any execution of the judgment pending appeal; further, the Grantor finds the Property's proper development is crucial to the City of Hutto, its citizens, Grantor and Grantee, requiring this action to preserve property in Hutto; and

WHEREAS, Grantor and Grantee find the expenditure of public funds in regard to this Special Warranty Deed promotes a public purpose of the City of Hutto, Texas in accordance with the Texas Constitution article III, section 52(a).

Unofficial Document

THIS CONVEYANCE IS MADE SUBJECT TO any and all restrictions, easements, mineral reservations, and other matters of record, to the extent they are validly existing and applicable to the Property (collectively, "Permitted Exceptions").

TO HAVE AND TO HOLD the Property, together with all and singular the rights and appurtenances to it in any way belonging, to Grantee, its successors, and its assigns forever, Grantor binds itself, its successors, and its assigns to WARRANT AND FOREVER DEFEND all and singular the title to the Property to Grantee, its successors, and its assigns against any person lawfully claiming or to claim the same or any part of it by, through, or under Grantor, but not otherwise, subject to the Permitted Exceptions.

GRANTOR IS CONVEYING THE PROPERTY TO GRANTEE AS IS, WHERE IS, AND WITH ALL FAULTS, AND SPECIFICALLY AND EXPRESSLY WITHOUT ANY WARRANTIES, REPRESENTATIONS, OR GUARANTEES, EITHER EXPRESS OR IMPLIED, OF ANY KIND, NATURE, OR TYPE FROM OR ON BEHALF OF GRANTOR, EXCEPT FOR GRANTOR'S SPECIAL WARRANTY OF TITLE STATED ABOVE. GRANTEE ACKNOWLEDGES AND STIPULATES THAT GRANTEE IS NOT RELYING ON ANY REPRESENTATION, STATEMENT, OR OTHER ASSERTION ABOUT THE CONDITION OF THE PROPERTY MADE BY GRANTOR, OR ANYONE ACTING ON GRANTOR'S BEHALF, BUT IS RELYING ON GRANTEE'S OWN EXAMINATION OF THE PROPERTY.

[REMAINDER OF PAGE INTENTIONALLY LEFT BLANK]

Unofficial Document

Executed to be effective as of the 6th day of March, 2023.

COTTONWOOD DEVELOPMENT CORPORATION
a Texas Corporation

By: _____
Name: James Earp
Title: CEO Cottonwood Development Corp.

THE STATE OF TEXAS §
§
COUNTY OF WILLIMSON §

This instrument was acknowledged before me on the 6 day of March, 2023, by James Earp of **COTTONWOOD DEVELOPMENT CORPORATION**, on behalf of said corporation in their capacity as the Chairman .

ANGELA KAVANAUGH
Notary Public, State of Texas
Comm. Expires 02-08-2026
Notary ID 133577468

_____
Notary Public in and for
the State of Texas

Unofficial Document

EXHIBIT "A"

LEGAL DESCRIPTIONS OF PARCEL

AS DESCRIBED IN EXHIBIT "C" TO THE NOVEMBER 9, 2022 FINAL JUDGEMENT AND ORDER OF FORCLOSURE ENTERED IN CAUSE NO. 21-0128-C368 OF THE 368TH JUDICIAL DISTRICT

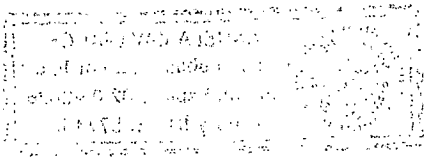

Unofficial Document

Tract Two:

A:

BEING 63.15 ACRES OF LAND OUT OF THE J.B. BEALLE SURVEY, ABSTRACT NUMBER 97 IN WILLIAMSON COUNTY, TEXAS, AND BEING A PORTION OF THAT CERTAIN JONATHAN EDWARD FRITZ AND SHARON K. FRITZ 89.08 ACRE TRACT RECORDED IN VOLUME 2198, PAGE 515, OFFICIAL RECORDS OF WILLIAMSON COUNTY, TEXAS, SAVE AN EXCEPT THAT CERTAIN 19.99 ACRES TRACT OF LAND RECORDED IN DOCUMENT NUMBER 9849321, OFFICIAL PUBLIC RECORDS, WILLIAMSON COUNTY, TEXAS, AND SAVE AND EXCEPT THAT CERTAIN 0.32 ACRES TRACT OF LAND RECORDED IN VOLUME 612, PAGE 53, DEED RECORDS, WILLIAMSON COUNTY, TEXAS, SAID 63.15 ACRES OF LAND TO BE MORE PARTICULARLY DESCRIBED AS FOLLOWS:

BEGINNING at an iron rod found in the northerly right-of-way line of Mager Lane, in the southerly line of aid 89.08 acre tract, same being the southeast corner of said 19.99 acre tract and the southwest corner hereof;

THENCE North 07 degrees 37 minutes 05 seconds East along said 19.99 acre tract easterly line, through said 89.09 acre tract, 1528.85 feet to an iron rod found in the southerly line of that certain Christopher Henry Fritz 106.84 acre tract as recorded in Document Number 2017012204, Official Public Records, said county, being the northeasterly corner of said 19.99 acre tract and the northwest corner hereof:

THENCE South 82 degrees 45 minutes 50 seconds East along said 106.84 acre tract southerly line and said 89.08 acre tract northerly line, 2010.54 feet to an iron rod found in the westerly right-of-way line of County Road 132, at the southeast corner of said 106.84 acre tract same being the northeast corner of said 89.09 acre tract and the northeast corner hereof;

THENCE South 07 degrees 37 minutes 05 minutes West, along said easterly right-of-way line and said 89.08 acre tract easterly line, 709.16 feet to an iron rod set in said line, being in the northerly line of county Road 136 having a 60" wide right-of-way, for an angle corner in the easterly line hereof;

THENCE along said County Road 136 northerly line, through said 89.08 acre tract, the following 3 calls,

1. South 51 degrees 29 minutes 58 seconds West, 280.72 feet to an iron rod set,
2. South 51 degrees 33 minutes 10 seconds West, 713.52 feet to an iron rod set,
3. South 62 degrees 55 minutes 43 seconds West, 208.18 feet to an iron rod et at the intersection of said Mager Lane and said County Road 136 northerly line, same being in the southerly line of aid 89.08 acre tract, for the southeast corner hereof

THENCE North 82 degrees 18 minutes 17 seconds West, along Mager Lane and said 89.08 acre tract southerly line, 1,149.66 feet to POINT OF BEGINNING.

Unofficial Document

B:

BEING 22.24 ACRES OF LAND OUT OF THE J.B. BEALLE SURVEY, ABSTRACT NUMBER 97 IN WILLIAMSON COUNTY, TEXAS, SAME BEING ALL OF THAT CERTAIN JONATHAN EDWARD FRITZ AND SHARON K. FRITZ 106.84 ACRE TRACT RECORDED IN VOLUME 784, PAGE 684, DEED RECORDS OF WILLIAMSON COUNTY, TEXAS, SAVE AND EXCEPT THAT CERTAIN 4.6387 ACRE TRACT OF LAND (LIMMER LOOP) AS RECORDED IN DOCUMENT NUMBER 2004013916, OFFICIAL PUBLIC RECORDS, WILLIAMSON COUNTY, TEXAS, AND THE NORTHERLY 75.21 ACRES OF LAND, SAID 22.24 ACRES OF LAND TO BE MORE PARTICULARLY DESCRIBED A FOLLOWS:

BEGINNING at an iron rod found in westerly right-of-way line of County Road 132, at the northeast corner of that certain Christopher Henry Frits 89.08 acre tract as recorded in Document Number 2017012204, Official Public Records, said county, same being the southeast corner of said 106.84 acre tract and the southeast corner hereof;

THENCE North 82 degrees 45 minutes 50 seconds West, along said 89.08 acre tract northerly line and said 106.84 acre tract southerly line, 2010.54 feet to an iron rod found at the northeast corner of that certain 19.99 acre tract as recorded in Document Number 984931, Official Public Records, said county, same being the northeast corner of Clark's Crossing, Section Three, a subdivision recorded in Cabinet Q, Slide 103, Plat Records, said County;

THENCE North 82 degrees 57 minutes 43 seconds West, along said 19.99 acre tract northerly line and said 106.84 acre tract southerly line, 202.85 feet to an iron rod found at the southeast former of Carol Meadows, a subdivision recoded in Cabinet W, Slide 300, Plat Records, said county, same being the southwest corner of said 106.84 acre tract and the southeast corner hereof;

THENCE North 07 degrees 50 minutes 45 seconds East, along said Carol Meadows subdivision easterly line and said 106.84 acre tract westerly line, 508.97 feet to a point for the southwest corner of said 4.6387 acre tract, same being the northwest corner hereof;

THENCE along said 4.6387 acre tract southerly line, through said 106.8 acre tract the following five courses:

1. South 85 degrees 08 minutes 39 seconds East, 55.20 feet to a point at the beginning of a curve to the right having a radius of 1955.00 feet;
2. South 81 degrees 49 minutes 22 seconds East, along said curve to the right, 251.16 feet to a point
3. South 77 degrees 58 minutes 57 seconds East, 1860.53 feet to an iron rod found;
4. South 34 degrees 57 minutes 03 second East, 73.54 feet to an iron rod found in said County Road 132 westerly right-of-way lines, same being the southeast corner of said 4.6387 acre tract and the northerly corner hereof;

THENCE South 07 degrees 34 minutes 26 seconds West, along said westerly right-of-way line and said 106.84 acre tract easterly line, 296.84 feet to the
POINT OF BEGINNING.

FILED AND RECORDED
OFFICIAL PUBLIC RECORDS 2023047850

DEED Fee: $46.00
06/12/2023 01:57 PM OSALINAS

Nancy E. Rister, County Clerk
Williamson County, Texas

(7) Hyde Kelley
2806 Flintrock Trace
Ste A104
Austin TX 78730

Unofficial Document

Hutto Retail Annexation

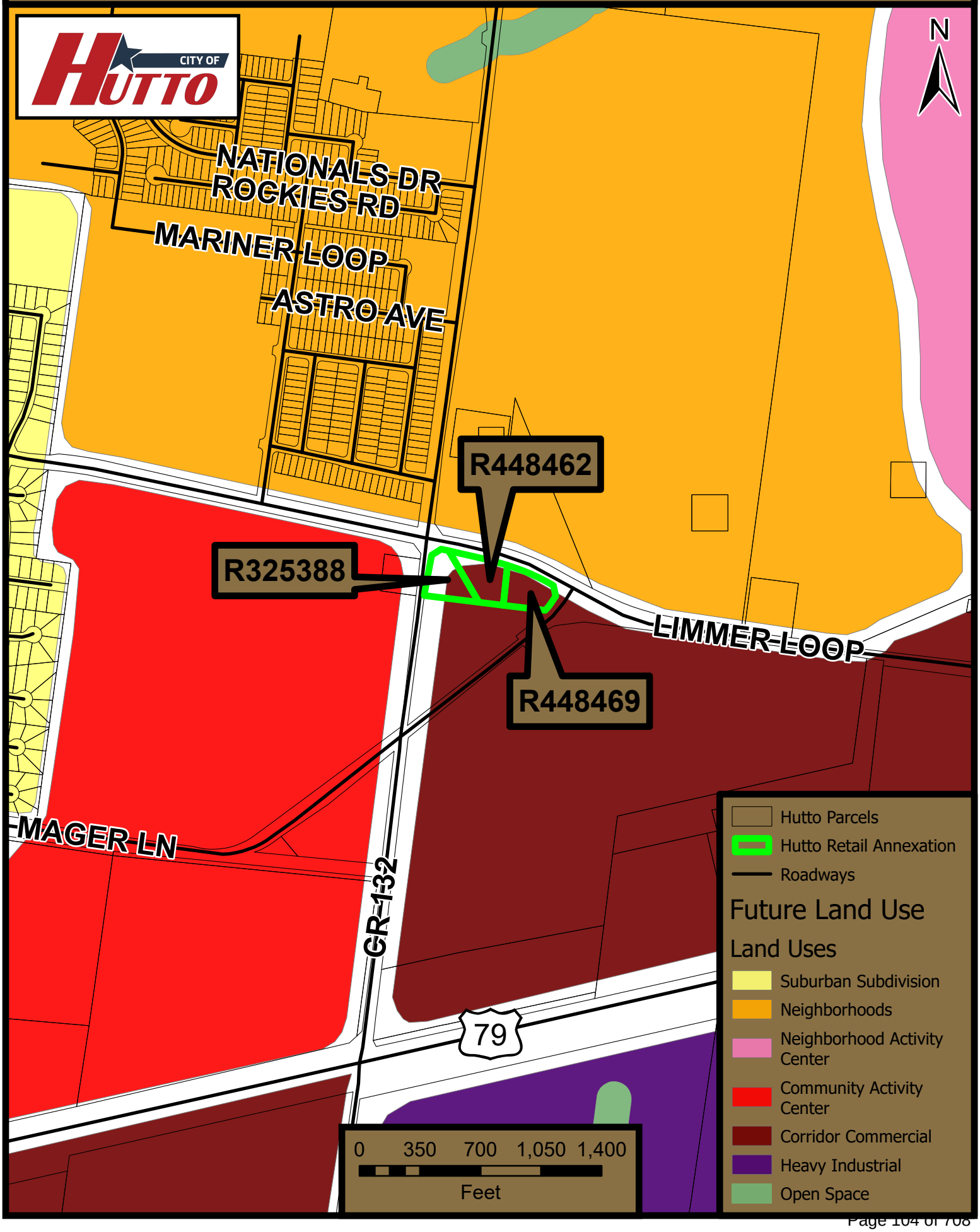

Hutto Retail Annexation

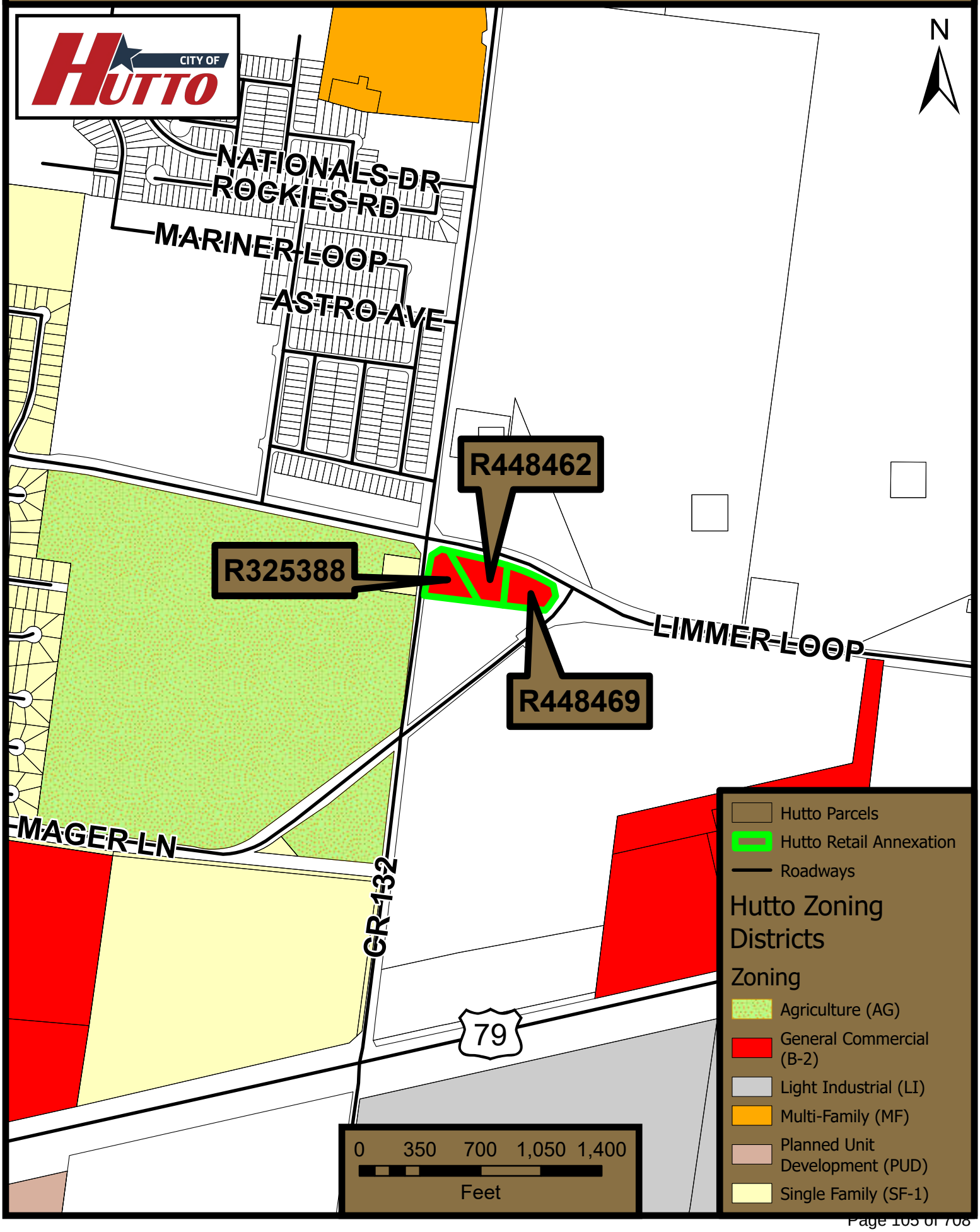

AGENDA ITEM REPORT
9.3.

To:	City Council
Subject:	Conduct a public hearing and related items in consideration and possible action to approve Ordinance No. O-2026-044 of the City of Hutto, Texas approving and adopting a budget for the City of Hutto for the Fiscal Year beginning October 1, 2026 and ending September 30, 2027 for the City of Hutto, Texas. (Alberta Barrett) **A copy of the City's proposed budget is available and located on the City's home page of its website at: www.huttotx.gov.**
Meeting:	Thursday, September 3, 2026
Department:	Finance /
Staff Contact:	Alberta Barrett

ITEM SUMMARY:

Conduct a public hearing to provide citizens the opportunity to present before City council their thoughts, concerns, and/or comments in reference to the proposed FY 2027 Budget.

According to Hutto City Charter Section 8.06, to implement the budget, City Council must adopt an ordinance adopting the budget for the ensuing fiscal year. Summary of the proposed budget is attached.

STAFF RECOMMENDATION:

Open the public hearing, conduct hearing, and close hearing. Discussion of the budget, making a motion for any changes and budget adoption.

Legal provides this sample motion —

I move to approve Ordinance O-2026-XXX of the City of Hutto, Texas, adopting the annual budget for the Fiscal Year 2026-2027 beginning October 1, 2026, and ending September 30, 2027, for the City of Hutto, Texas.

Staff recommends approval of the FY 2027 Budget.

FISCAL NOTES:

The fiscal operation plan for fiscal year October 1, 2026 to September 30, 2027.

ATTACHMENTS:

1. Summary of Changes

AGENDA ITEM REPORT
9.3.

2. CIP 5 year Budget
3. 2026.09.03 UF & Impact Fee Budgets
4. Taxpayer Impact Statement
5. Proposed O-2026-Approving Budget FY 2027
6. Fund Summary - FY 2027

Below is a list of the major changes to the September 3, 2026, agenda item #10.3 related to the FY 2027 Budget:

Capital Improvement Budget (5 year):

Building Projects

1) Justice Center F02. Increased budget amount to $48 million with a funding source of the Series 2027 General Obligation debt issuance.

Park Projects

1) Included pond maintenance expense of $55k with the funding source of the Capital Improvement Operation Fund (60).

Street Projects

1) Revised projections and carryover amounts to the budget throughout the street category.
2) Reduced the amount needed to borrow in FY 2027 to $4,633,569 by using $1,150,000 from Series 2022 GO issuance, $3,100,000 from Series 2024 GO issuance, and $5,554,031 from the Transportation Improvement Fund.

		Project Amount
~~Exchange Blvd. Recon~~ Intersection @ Live Oak & Exchange	T15	$ 3,187,600
Alliance Expansion	T21	2,250,000
Intersection at Ed Schmidt to end at Live Oak	T46/T79	7,000,000
Carl Stern/685	T73	2,000,000
Total Estimated Project Cost		**$ 14,437,600**

Funding Sources		**Amount**
Series 2022 GO		1,150,000
Series 2024 GO		3,100,000
Transportation Impr Fund		5,554,031
Total Funds Available		**$ 9,804,031**
Net Series 2027 CO Borrowing		**$ 4,633,569**

Wastewater Projects

1) The scope for the Central Texas WWTP WW16 has been revised. Originally, there was a need to issue debt in the amount of $29.1 million but after the scope revision the amount needed to borrow is $12.3 million.

Utility and Impact Fee Fund Long Term Projections

1) Central WWTP WW16 revised scope from expansion to bypass reduced the amount necessary to borrow to $12.3 million versus the original estimate of $29.1 million.
2) Revised the water and wastewater impact fee revenues for this fiscal year projections.

3) Revised transfers and reimbursements between the Utility Fund and Impact Fee Fund.
4) The above changes eliminated the need for a utility rate increase of 5% in FY 2029 and 15% in FY 2030 to a 2% rate increase in FY 2031.

Fund Summary

Added this at a glance spreadsheet to reflect a summary of revenues, expenditures, and fund balances for all funds.

General Fund

1) Fund Balance and Reserve Status for FY 2027:

Total Revenues	$37,301,126
Total Expenditures	$37,300,023
Increase (Decrease to Fund Balance	$1,103
Estimated Fund Balance as of 09/30/2027	$11,090,558
Reserve Requirement (25%)	$9,191,881
2027 *Estimated* Fund Balance Percentage	30%

Note expenditures increased since the August presentation due to expense carryover to FY 2027

Utility Fund

1) Fund Balance and Reserve Status for FY 2027:

Total Revenues	$46,719,835
Total Expenses	$46,707,955
Increase (Decrease to Fund Balance	$11,880
Estimated Fund Balance as of 09/30/2027	$15,365,555
Reserve Requirement (25%)	$11,676,989
2027 Estimated Fund Balance Percentage	33%

Economic Development Corporation

Since the board approved the FY 2027 budget at their June meeting, Finance made adjustments to the FY 2026 projected expenditures. These adjustments included updates for recently approved property purchases, sponsorships, and marketing services.

Updates to the 2027 budget include the following:

- Addition of a payment for a property purchase in downtown for $200,000. The board approved the purchase of the property and is to be spread over three years. $200,000 is the FY 2027 commitment.
- Moving $10,000 into performance grants. K-Tonic is not expected to submit their final $10,000 request this fiscal year, so is being included in the FY 2027 budget

After the adjustments to the FY 2026 projected totals and FY2027 proposed budget, budgeted ending fund balance is $6,503,899. This is a $390,806 decrease from the budget approved by the board in June.

Funding Legend	
Sufficient Budget for Current Project Cost	
Need More Funding	
Over Budget	
Funded ONLY if Sponsorship Received	

BUILDING PROJECTS

	Project	Project Code	*PROJECTS UNDERWAY OR REQUIRED* Projected FY 2025-2026	YEARS 1 Budget FY 2026-27	2 Budget FY 2027-28	3 Budget FY 2028-29	4 Budget FY 2029-30	5 Budget FY 2030-31
1	*new* Public Works Facility/Parks Headquarters	F01/F08			4,250,000	36,000,000		
2	*new* Police Facility/Justice Center	F02	1,172,109	3,930,560				
	new Police Facility/ Justice Center			48,000,000				
3	Library/Community Center	F04					200,000	
4	Downtown Restroom	F07				500,000		
5	Recreation Center	F09						200,000
6	Buildings - ADA Plan	FXX		364,000				
	Total Building Projects		**1,172,109**	**52,294,560**	**4,250,000**	**36,500,000**	**200,000**	**200,000**

Funding Source	Fund	Projected FY 2025-2026	Budget FY 2026-27	Budget FY 2027-28	Budget FY 2028-29	Budget FY 2029-30	Budget FY 2030-31
Community Benefit Fee Fund	41	102,669	364,000	250,000	500,000	200,000	200,000
Capital Improvement Operating Funds	60						
Series 2026 General Obligation	33	1,069,440	3,930,560	4,000,000	36,000,000		
Future Debt Issuance			48,000,000				
Total		**1,172,109**	**52,294,560**	**4,250,000**	**36,500,000**	**200,000**	**200,000**

Funding Legend
Sufficient Budget for Current Project Cost
Need More Funding
Over Budget
Funded ONLY if Sponsorship Received

PARK PROJECTS

Project	Project Code	*PROJECTS UNDERWAY OR REQUIRED* Projected FY 2025-2026	YEARS 1 Budget FY 2026-27	2 Budget FY 2027-28	3 Budget FY 2028-29	4 Budget FY 2029-30	5 Budget FY 2030-31
Pond Maintenance			55,000				
Parks & Trails - ADA Plan			288,000	713,000	713,000		
Trail Expansion at Adam Orgain Park	P09		250,000				
Athletic Fields Feasibility & Land purchase	P15		400,000	23,500,000			
Orgain Park Improvements	P17			4,400,000			
Hutto Lake Park	P21			4,000,000			
Trail Expansion - Hutto Lake Park South	P22		320,000				
Durango Park	P24					3,000,000	
Trail Extension - Brushy Creek Expansion	P26		2,744,400				
Nature Park	P27					2,500,000	
Creekside Park Improvements	P28		1,500,000				
Mustang Creek Park	P29					12,000,000	
~~Skate Park~~	~~P30~~				-		
Trail Extension - Cottonwood Creek Trail South	P31			5,071,200			
Southeast Loop Park	P33				-	15,000,000	
Nature Trail 1 - Great Western to Riverwalk	P36		336,000				
Brushy Creek Trail from CR 137 to FM 1660	P38				3,907,200		
Brushy Creek Trail From Chris Kelley to CR 110	P39				4,104,000		
Brushy Creek Trail Riverwalk to Enclave	P40				336,000		
Cottonwood Trail Mager to Limmer	P41			745,200			
Cottonwood Trail from Limmer to Emory Crossing	P42			837,600			
Cottonwood Trail Emory to CR 118	P43			2,233,200			
Carmel Creek Trail Limmer to CR 118	P44				1,348,800		
Carmel Creek Trail from Limmer to US 79	P45				2,697,600		
Carmel Creek Trail Brushy Creek to US 79	P46				-		
Total Park Projects		**-**	**5,893,400**	**41,500,200**	**13,106,600**	**32,500,000**	**-**

Funding Source	Fund	Projected FY 2025-2026	Budget FY 2026-27	Budget FY 2027-28	Budget FY 2028-29	Budget FY 2029-30	Budget FY 2030-31
Series 2023A General Obligation Bond	17		1,500,000				
Park Improvement Fund	40		288,000	713,000	713,000		
Community Benefit Fee Fund	41						
Capital Improvement Operating Funds	60		55,000				
Future Debt Issuance				31,900,000		32,500,000	-
Unfunded (Sponsors)			4,050,400	8,887,200	12,393,600		
Total		**-**	**5,893,400**	**41,500,200**	**13,106,600**	**32,500,000**	**-**

Funding Legend	
Sufficient Budget for Current Project Cost	
Need More Funding	
Over Budget	
Funded ONLY if Sponsorship Received	

STREET & DRAINAGE PROJECTS

Project	Project Code	*PROJECTS UNDERWAY OR REQUIRED* Projected FY 2025-2026	YEARS 1 Budget FY 2026-27	2 Budget FY 2027-28	3 Budget FY 2028-29	4 Budget FY 2029-30	5 Budget FY 2030-31
Legends of Hutto Drainage Ditches	D01	1,799,775	3,928,056				
Sidewalk Construction - ADA Plan	T01	500,000	500,000	500,000	500,000		
FM 1660 **South** at US 79	T04	173,812	3,306,239				
CR 137 from FM 1660 to Brushy Creek	T05	1,833,622	9,504,630				
~~CR 132 Overpass at US 79~~ CR 132 & US 79 Intersection	T07	51,246		13,000,000	-		
Live Oak Reconstruction	T09	46,656		8,896,249			
Ed Schmidt ~~Safety & Operations~~ Intersection & Reconstruction	T10	942,743	5,213,600	9,000,000			
~~Exchange Blvd. Recon~~ Intersection @ Live Oak & Exchange	T15	397,171	378,073		-		
~~Exchange Blvd. Recon~~ Intersection @ Live Oak & Exchange	T15		3,187,600				
FM 1660 & Main Hippo	T16		306,257	-	-		
Limmer Loop & Haybarn Intersection	T17				2,200,000		
CR 163 Reconstruction	T18	740,237			4,576,047		
CR 199 Reconstruction	T19	669,083		19,450,736			
Alliance Expansion	T21	103,725	2,250,000				
Innovation Expansion	T22		500,000	-	2,250,000		
1660 N Expansion from Farley to Live Oak	T23						1,979,000
CR 137 Expansion from Farley to CR 138	T24			-			15,234,000
CR 132 from CR 132 to FM 3349	T25						22,820,000
SH130 NB Frontage from US 79 to Limmer	T26	500,000		9,913,380	-		
CR132/CR133 Expansion	T28		-	-			33,225,969
Carl Stern from End to Camargue	T29						3,533,000
FM 1660 at Carl Stern	T30				10,211,000		
Megasite North-South Arterial	T31						8,080,000
FM 1660 N from Live Oak to Limmer	T34						8,568,000
Emory Crossing Blvd Extension	T35						8,740,000
Main Hippo Extension	T36						9,850,000
Limmer Loop from 1660 to CR 132	T37				27,460,000		
FM 1660 N from Limmer to CR 100	T38			-	20,908,000		
Limmer Loop from CR 132 to US 79	T39						8,137,000
FM 1660 S from Front to Carl Stern	T40						7,740,000
CR 132 Realignment between CR 132 & CR 133	T41	209,083	19,000,000	-			
FM 1660 N from CR 100 to CR 133	T42						10,001,000
ED Schmidt from Limmer to Chandler	T43						39,591,000

Project	Project Code	*PROJECTS UNDERWAY OR REQUIRED* Projected FY 2025-2026	YEARS 1 Budget FY 2026-27	2 Budget FY 2027-28	3 Budget FY 2028-29	4 Budget FY 2029-30	5 Budget FY 2030-31
FM 1660 N from CR 133 to Chandler	T44						5,026,000
FM 1660 S from Carl Stern to CR 137	T45						10,272,000
Intersection at Ed Schmidt to end at Live Oak	T46/T79	471,000	3,266,431		-		
			4,633,569				
Limmer Loop from Innovation to Ed Schmidt	T47	545,405	336,161	6,769,476			
Limmer from Ed Schmidt to FM 1660	T48	40,280	959,013	7,579,445			
FM 1660 S from CR 137 to East Wilco Hwy	T49			-			12,841,000
Main Hippo from FM 1660 to CR 100	T50						11,249,000
Limmer Loop from Covert to CR 101	T51						29,483,000
Megasite NS extension from CR 132 to East Wilco Hwy	T52						24,594,000
Snyder Blvd from Innovation to SH 130	T53						1,771,000
~~Meagsite EW extension from End to CR 132~~	~~T54~~						
Carl Stern from Carmague to Megasite NS extension	T55						25,578,000
CR 118 from SH 130 to Ed Schmidt	T56						6,833,000
CR 100 from Ed Schmidt to FM 1660	T57						19,894,000
FM 1660 N from Chandler to ETJ	T58						43,968,000
FM 1660 S from East Wilco Hwy to ETJ	T59						40,095,000
CR 130 from CR 100 to Chandler	T60						3,770,000
CR 132 from CR 132 to FM 1660	T65		-	-			43,300,000
Quiet Zone Improvements at Jim Cage Lane	T66				558,075		
FM 1660 S Quiet Zone	T67				564,000		
Jim Cage Sidewalks	T68				191,500		
Metcalfe Sidewalks	T69				276,000		
Church Street Sidewalks	T70				157,000		
Austin Avenue Sidewalks	T71				288,000		
Brushy Street Sidewalks	T72				144,000		
Carl Stern/685	T73	355,596	2,000,000				
Total Street & Drainage Projects		**9,379,434**	**59,269,629**	**75,109,286**	**70,283,622**	**-**	**456,172,969**

Funding Source	Fund	Projected FY 2025-2026	Budget FY 2026-27	Budget FY 2027-28	Budget FY 2028-29	Budget FY 2029-30	Budget FY 2030-31
Series 2022 General Obligation Bond	12	2,630,219	5,170,473				
Series 2023 General Obligation Bond	14		306,257				
Series 2024 Certificate of Obligation	31	2,874,980	6,357,416				
Series 2024 General Obligation	32	474,762	15,388,870				
Community Benefit Fee Fund	41	744,321	500,000	500,000	500,000		
Transportation Improvement Fund	42	2,605,196	7,913,044				
Capital Improvement Operating Funds	60	49,956	-	-	-	-	
TIRZ #3			-				
Future Debt Issuance			4,633,569	74,609,286	69,783,622		233,398,000
Unfunded (Sponsors)			19,000,000				222,774,969
Total		**9,379,434**	**59,269,629**	**75,109,286**	**70,283,622**	**-**	**456,172,969**

Funding Legend	
Sufficient Budget for Current Project Cost	
Need More Funding	
Over Budget	
Funded ONLY if Sponsorship Received	

WATER PROJECTS

Project	Project Code	*PROJECTS UNDERWAY OR REQUIRED* Projected FY 2025-2026	YEARS 1 Budget FY 2026-27	2 Budget FY 2027-28	3 Budget FY 2028-29	4 Budget FY 2029-30	5 Budget FY 2030-31
New Elevated Storage Tank (Cottonwood)	W07-2023	1,133,746	30,084,370				
CR 132 24" & 30" Waterline	W13-2025			8,400,000	-		
Highway 79 Western Waterline Crossing	W17-2026			-	8,079,086		
Water Reclamation Expansion	W24-2027			250,000			
Iron Removal	W27					19,900,000	
Total Water Projects		**1,133,746**	**30,084,370**	**8,650,000**	**8,079,086**	**19,900,000**	**-**

Funding Source	Fund	Projected FY 2025-2026	Budget FY 2026-27	Budget FY 2027-28	Budget FY 2028-29	Budget FY 2029-30	Budget FY 2030-31
Utility Impact Fee Fund *(Developers Participation)*	52						
Series 2019 Certificate of Obligation	55						
Series 2022 Certificate of Obligation	57						
Series 2024 Certificate of Obligation	58	1,133,746	30,084,370				
Capital Improvement Operating Funds	60			250,000			
ARPA	65						
Future Debt Issuance				8,400,000	8,079,086		
Unfunded (Sponsors)						19,900,000	
Total		**1,133,746**	**30,084,370**	**8,650,000**	**8,079,086**	**19,900,000**	**-**

Funding Legend	
Sufficient Budget for Current Project Cost	
Need More Funding	
Over Budget	
Funded ONLY if Sponsorship Received	

WASTEWATER PROJECTS

Project	Project Code	*PROJECTS UNDERWAY OR REQUIRED* Projected FY 2025-2026	YEARS 1 Budget FY 2026-27	2 Budget FY 2027-28	3 Budget FY 2028-29	4 Budget FY 2029-30	5 Budget FY 2030-31
Glenwood LS, Interceptor, Central Plant LS, South Plant LS	WW01-2023	11,604,255	5,702,405				
South WWTP Final Design & Bidding for Expansion to 6 MGD	WW05-2023	1,734,521	1,735,707				
South WWTP Construction of 6 MGD Expansion	WW06-2023	55,056,888	35,122,599				
SE Loop Wastewater Interceptor	WW10-2023	38,263,414	6,573,286				
Brushy Creek Interceptor Phase 4	WW11-2024	10,107,931	26,248,746				
Avery Lake Interceptor Phase I	WW13-2024		7,773,207				
Ironwood Wastewater Lines - Possible Developer Part.	WW15-2024			2,526,700			
Central WWTP ~~Expansion~~ Phase I Bypass	WW16-2025	645,725	12,283,000		-		
Kirk Tract Line - Possible Developer Participation	WW18-2025			2,213,200			
Meadowbrook Line - Possible Developer Participation	WW19-2025		1,885,400				
Avery Lake Interceptor Phase 2	WW23-2026		4,880,000				
SH 130 15" & 18" Wastewater Line - Possible Developer Part	WW25-2026		-	1,209,400			
Cottonwood Creek Interceptor Phase 1	WW26-2026			-	26,219,989		
CR 132 & US 79 Wastewater Interceptor (Developers Participation)	WW27	4,323,527	-				
Total Wastewater Projects		**121,736,261**	**102,204,350**	**5,949,300**	**26,219,989**	**-**	**-**

Funding Source	Fund	Projected FY 2025-2026	Budget FY 2026-27	Budget FY 2027-28	Budget FY 2028-29	Budget FY 2029-30	Budget FY 2030-31
Utility Impact Fee Fund *(Developers Participation)*	52		1,885,400	5,949,300	-		
Series 2019 Certificate of Obligation	55	230,000					
Texas Water Development Board (TWDB) Funds	56	2,238,400					
Series 2022 Certificate of Obligation	57						
Series 2024 Certificate of Obligation	58	88,112,878	42,560,711				
ARPA	65	4,071,078					
Series 2026 General Obligation	54	27,083,905	45,475,239		-		
Future Debt Issuance			12,283,000	-	26,219,989		
Total		**121,736,261**	**102,204,350**	**5,949,300**	**26,219,989**	**-**	**-**

REMAINING FUNDS FROM FUNDING SOURCES

			PROJECTS UNDERWAY OR REQUIRED	YEARS				
				1	2	3	4	5
			Projected	Budget	Budget	Budget	Budget	Budget
			FY 2025-2026	FY 2026-27	FY 2027-28	FY 2028-29	FY 2029-30	FY 2030-31
1	***Series 2022 GO Bonds***	**Fund 12**						
	Streets & Drainage							
	Interest Earned		315,939	220,531				
	FM 1660 **South** at US 79	T04	173,812	3,306,239				
	CR 137 from FM 1660 to Brushy Creek	T05	1,358,860					
	Intersection @ Live Oak & Exchange	T15	397,171	378,073				
	Alliance Expansion	T21	103,725	1,150,000				
	Limmer Loop from Innovation to Ed Schmidt	T47	545,405	336,161				
	Reimbursement of CIP Salaries		198,191	200,535				
	Total Budgeted Expenditures		2,777,164	5,371,008				
	Amount Available/Fund Remaining		***5,513,281***	***362,804***				
2	***Series 2023 GO Bonds***	**Fund 14**						
	Streets & Drainage							
	Interest Earned		10,740	16,437				
	Traffic Signal Participation w/HISD	T16		306,257				
	Total Budgeted Expenditures		-	306,257				
	Amount Available/Fund Remaining		***469,620***	***179,800***				
3	***Series 2023A GO Bonds***	**Fund 17**						
	Parks							
	Interest Earned		204,538	52,458				
	Creekeside Park Improvements	P28		1,500,000				
	Total Budgeted Expenditures		-	1,500,000				
	Amount Available/Fund Remaining		***1,498,792***	***51,250***				
4	***Series 2024 CO***	**Fund 31**						
	Streets & Drainage							
	Interest Earned		165,846	221,801				
	Legends of Hutto Drainage Ditches	D01	1,796,475	3,928,056				
	Ed Schmidt Safety & Operations	T10	869,422	2,429,360				
	Transfer to Debt Service (11) Interest Earned		165,846	140,746				
	Total Budgeted Expenditures		2,831,743	6,498,162				
	Amount Available/Fund Remaining		***6,337,169***	***60,808***				
5	***Series 2024 GO***	**Fund 32**						
	Streets & Drainage							
	Interest Earned		384,152	505,714				
	Owner's Repr expense	32-040-023-6405	(124,500)	(175,000)				
	ADA Transition Plan	32-040-023-6418	(90,909)	-				

			PROJECTS UNDERWAY OR REQUIRED	YEARS				
				1	2	3	4	5
			Projected FY 2025-2026	Budget FY 2026-27	Budget FY 2027-28	Budget FY 2028-29	Budget FY 2029-30	Budget FY 2030-31
	CR 137 from FM 1660 to Brushy Creek	T05	474,762	9,504,630				
	Ed Schmidt Safety & Operations	T10		2,784,240				
	Carl Stern/685	T73		2,000,000				
	Alliance Expansion	T21		1,100,000				
	Transfer to Debt Service (11) Interest Earned		168,743	330,714				
	Total Budgeted Expenditures		474,762	15,388,870				
	Amount Available/Fund Remaining		***15,449,905***	***61,035***				
6	***Series 2026 General Obligation***	**Fund 33**						
	Building Projects							
	Interest Earned		110,380	175,000				
	new Police Facility	F02	1,069,440	3,930,560				
	Transfer to Debt Service (11) Interest Earned		-	175,000				
	Total Budgeted Expenditures		1,069,440	4,105,560				
	Amount Available/Fund Remaining		***4,041,441***	***110,881***				
7	***Park Improvement Fund***	**Fund 40**						
	Parks							
	Interest Earned		42,258	38,809				
	Park Land Fees		56,240	100,000				
	Parks & Trail - ADA Plan			288,000				
	Fritz Park	P02	259,980					
	Total Budgeted Expenditures		-	288,000				
	Amount Available/Fund Remaining		***1,107,972***	***958,781***				
8	***Community Benefit Fee Fund***	**Fund 41**						
	Revenue							
	Cottonwood Creek		347,915					
	Priarie Winds (L Walker)			672,000				
	Event Revenue		100,000					
	Interest Earned		87,413	59,320				
	Buildings							
	Buildings - ADA Plan			364,000				
	Streets							
	Sidewalk Construction - ADA Plan	T01	500,000	500,000				
	Intersection at Ed Schmidt to end at Live Oak	T46/T79	171,000					
	Total Budgeted Expenditures		671,000	864,000				
	Amount Available/Fund Remaining		***1,694,852***	***1,562,172***				
9	***Transportation Improvement Fund***	**Fund 42**						
	Streets							
	Interest Earned		300,696	276,957				
	Transportation Impact Fees		1,838,631	1,300,000				

			PROJECTS UNDERWAY OR REQUIRED Projected FY 2025-2026	YEARS 1 Budget FY 2026-27	2 Budget FY 2027-28	3 Budget FY 2028-29	4 Budget FY 2029-30	5 Budget FY 2030-31
	Intersection @ Live Oak & Exchange	T15	-	3,187,600				
	CR 163 Reconstruction	T18	740,237					
	CR 199 Reconstruction	T19	669,083					
	Innovation Expansion	T22		500,000				
	SH 130 NB Frontage from US 79 to Limmer	T26	500,000					
	Intersection at Ed Schmidt to end at Live Oak	T46/79	300,000	3,266,431				
	Limmer from Ed Schmidt to FM 1660	T48	40,280	959,013				
	Carl Stern/685	T73	355,596					
	Total Budgeted Expenditures		2,605,196	7,913,044				
	Amount Available/Fund Remaining		***7,913,044***	***1,576,957***				
10	**Reimb from Dev Contr/Impact Fees**	**Fund 52**						
	Brushy Creek Interceptor Phase 3	WW09	3,445,190					
	Meadowbrook Line - Possible Developer Participation	WW19		1,885,400				
	Total Expenses		***3,445,190***	***1,885,400***				
11	***Series 2026 Certificate of Obligation***							
	Water & Sewer	**Fund 54**						
	Interest Earned		1,608,131	1,650,778				
	SE Loop Wastewater Interceptor	WW10	18,334,323	6,573,286				
	Brushy Creek Interceptor Phase 4	WW11	8,749,582	26,248,746				
	Avery Lake Interceptor Phase I	WW13	-	7,773,207				
	Avery Lake Interceptor Phase 2	WW23	-	4,880,000				
	Transfer to General Fund (CIP Salaries)		258,589	685,701				
	Total Budgeted Expenditures		27,342,494	46,160,940				
	Amount Available/Fund Remaining		***47,165,095***	***2,654,933***				
12	***Series 2019***	**Fund 55**						
	Water & Sewer							
	Capital Contributions							
	Interest Earned		8,217					
	Glenwood Lift Station	WW01	230,000					
	Total Budgeted Expenditures		230,000					
	Amount Available/Funds Remaining		***297***					
13	***TWDB UNUSED FUNDS***	**Fund 56**						
	Interest Earned							
	Glenwood Lift Station	WW01	1,817,702					
	Total Budgeted Expenditures		1,817,702					
	Amount Available/Funds Remaining		***-***					

			PROJECTS UNDERWAY OR REQUIRED	YEARS				
				1	2	3	4	5
			Projected	Budget	Budget	Budget	Budget	Budget
			FY 2025-2026	FY 2026-27	FY 2027-28	FY 2028-29	FY 2029-30	FY 2030-31
14	***Series 2022***	**Fund 57**						
	Water & Sewer							
	Interest Earned		173,452	30,543				
	Total Budgeted Expenditures		-					
	Amount Available/Funds Remaining		***872,670***	***903,213***				
15	***Series 2024***	**Fund 58**						
	Water & Sewer							
	Interest Earned		5,793,324	2,642,015				
	New Elevated Storage Tank & Lines	**W07**	1,133,746	30,084,370				
	Glenwood Lift Station	WW01	9,135,855	5,702,405				
	South WWTP Final Design & Bidding for Expansion to 6 MGD	WW05	1,734,521	1,735,707				
	South WWTP Const 6 MGD Expansion	WW06	55,056,888	35,122,599				
	SE Loop Wastewater Interceptor	WW10	15,858,013	-				
	Brushy Creek Interceptor Phase 4	WW11	1,358,349					
	Central WWTP Expansion Phase I	WW16	645,725					
	CR 132 & US 79 Wastewater Interceptor	WW27	4,323,527	-				
	Transfer to General Fund (CIP Salaries)		304,145	242,805				
	Total Budgeted Expenditures		89,550,769	72,887,886				
	Amount Available/Fund Remaining		***75,486,148***	***5,240,278***				
16	**CIP Operating Funds**	**Fund 60**						
	Interest Earned		88,630	10,093				
	Transfer in from General Fund		48,277					
	LiDAR		65,182	65,182				
	Pond Maintenance			55,000				
	Total Budgeted Expenditures		65,182	120,182				
	Amount Available/Funds Remaining		***231,669***	***121,580***				
17	***ARPA FUNDS***	**Fund 65**						
	Interest Earned		198,486					
	SE Loop Wastewater Interceptor	WW10-2023	4,071,078					
	Total Budgeted Expenditures		4,071,078					
	Amount Available/Funds Remaining		***407,487***					
18	***Skybox Datacenter BPP***	***new*** **Fund 38**						
	Interest Earned			-				
	Assessments from Skybox BPP			42,427				
	Total Budgeted Expenditures							
	Amount Available/Funds Remaining			42,427				

			PROJECTS UNDERWAY OR REQUIRED	YEARS				
				1	2	3	4	5
			Projected FY 2025-2026	Budget FY 2026-27	Budget FY 2027-28	Budget FY 2028-29	Budget FY 2029-30	Budget FY 2030-31
	FUNDS FROM FUTURE FUNDING SOURCES							
19	***Series 2027 GO***							
	Building Projects							
	new Police Justice Center	F02		48,000,000				
	Total Issuance			**48,000,000**				
20	***Series 2027 CO***							
	Street Projects							
	Intersection at Ed Schmidt to end at Live Oak	T46/T79		4,633,569				
	Wastewater Projects							
	Central WWTP Bypass	WW16		12,283,000				
	Total Issuance			**16,916,569**				

CITY OF HUTTO
CITY COUNCIL WORK SESSION

~~MAY 7, 2026~~ September 3, 2026

UTILITY FUND & IMPACT FEE FUND LONG TERM PROJECTIONS

Wi-Fi: Hutto-Guest / Password: PublicGuest19

Presentation Includes Two Scenarios

- Presentation Includes ~~Two~~ ~~Scenarios~~ Revised Assumptions, Scenario Approved on May 7, 2026, and September 3, 2026 Scenario for Review and Discussion (revisions in red)

- Assumptions

- ~~Scenario #1 with Rate Impact~~

- ~~Scenario #2 with Rate Impact~~ Scenario Approved on May 7, 2026
- September 3, 2026 Scenario with Rate Impact

ASSUMPTIONS

CIP Projects *Requiring Future Debt:*

Principal Payments funded from Impact Fee Fund

Interest Payment funded from Utility Fund

- **FY 2027**
  - WW16 – Central WWTP Diversion Phase 1: ~~*$29.1m*~~ *$12.3m revised scope*
- **FY 2028**
  - W13 – CR 132 24" & 30" Waterline: *$8.4m*
  - WXX – Infrastructure from Manville to Hutto (~$50M)
- **FY 2029**
  - W17 – US 79 Western Waterline Crossing: *$8.1m*
  - WW26 – Cottonwood Creek Interceptor Phase 1: *$26.2m*

ASSUMPTIONS

Developer Participation Project *Reimbursements:*

Funded from Utility Impact Fee Fund

- **FY 2027**
  - WW19 – Meadowbrook Line: *$1,885,400*
- **FY 2028**
  - WW15 – Ironwood Wastewater Lines: *$2,526,700*
  - WW25 – SH 130 15" & 18" Wastewater Line: *$1,209,400*
  - WW18 – Kirk Tract Line: *$2,213,200*

ASSUMPTIONS

Utility Fund Operating Expenses

- **Water Purchases**
  - **2027:** Recharge increase expense for full year
    +$2.6M in FY27

- *All other operating expenses (personnel,supplies, repair & maintenance, etc.) will be held to only modest increases*
  - ***no new FTEs projected FY2027-2032 but could possibly add in FY 2030 or FY 2031*

ASSUMPTIONS

- Growth Rate:
  - Water reduced from 5.4% to 3.3% year over year
  - Wastewater reduced from 5.4% to 4.2% year over year
  - Revised FY 2026 projected revenues

- Estimated Beginning Fund Balance as of 10/01/2026:
  - Utility Fund = $16,148,540
  - Impact Fee Fund = ~~$17,552,559~~ $21,914,293

~~Scenario #1~~

- Transfers from Impact Fee Fund to Utility Fund:

  Interest Payments for Operational Coverage

  - FY 2027 - ~~$4,500,000~~ $3,000,000
  - FY 2028 - ~~$5,000,000~~ $3,000,000
- Impact Fee Fund becomes negative in ~~FY 2029~~ FY 2030
- Utility Fund reimburses Impact Fee Fund ~~$20.5~~ $11million over fiscal years 2029 to 2032
- Utility Fund transfers ~~$8 million~~ $0 for capital improvement projects

~~Scenario #1 Continued~~

- ~~*Estimated* Rate Increases~~

~~(To maintain the Utility Fund fund balance reserve requirement of 25%)~~

  - ~~FY 2027 – 0%~~
  - ~~**FY 2028 – 5%**~~
  - ~~**FY 2029 – 27%**~~
  - ~~FY 2030 – 0%~~
  - ~~FY 2031 – 0%~~
  - ~~FY 2032 – 0%~~

~~Scenario #2~~ Approved May 7, 2026

Economic Development Corp (EDC) Reimbursement Related to the Megasite – FY 2027:

Reimbursement	Utility Fund	Debt Svc Fund
Lump Sum Reimbursement (one time payment):		
Expenses related to East West Spine Road	$4,511,300	
Reoccurring Annual Reimbursements:		
Debt Issuance (Principal & Interest)		
Megasite Water Line	$1,447,119	
Megasite Wastewater Lines	$385,654	
East West Spine Road		$715,200
Total Annual Reimbursements	$1,832,773	$715,200
Total FY 2027	**$6,344,073**	**$715,200**

~~Scenario #2~~ Approved May 7, 2026

Economic Development Corp (EDC) Reimbursement Related to the Megasite – FY 2028 – FY 2032:

Reoccurring Reimbursements (Principal & Interest)	2028	2029	2030	2031	2032
Utility Fund					
Megasite Waterline	$1,598,147	$1,701,418	$1,695,021	$1,706,680	$1,728,997
Megasite Wastewater Lines	$417,129	$443,647	$440,414	$446,428	$458,233
Total Utility Fund	**$2,015,276**	**$2,145,065**	**$2,135,434**	**$2,153,108**	**$2,187,230**
Debt Service Fund					
East West Spine Road	$701,200	$687,200	$673,200	$851,200	$852,800
Total Debt Service	**$701,200**	**$687,200**	**$673,200**	**$851,200**	**$852,800**
Total Reimbursement	**$2,716,476**	**$2,832,265**	**$2,808,634**	**$3,004,308**	**$3,040,030**

~~Scenario #2~~ Approved May 7, 2026

- **Reduces** cumulative transfer (FY 2027-2029) from Impact Fee Fund to Utility Fund from $9.5 million to ~~$7~~ $5.5 million ~~**($2.5 million difference)**~~

- **Reduces** cumulative Utility Fund reimbursement (FY2029-2032) to Impact Fee Fund from $20.5 million to ~~$17.5~~ $11 million ~~**($3 million difference)**~~

- ~~Utility Fund transfers $3 million for capital improvement projects.~~

SEPTEMBER 3, 2026 MAJOR CHANGES

- Revised FY 2026 projected Impact Fee revenues
- Scope for CIP project WW16 Central Texas WWTP Bypass versus Expansion
- Reduced FY 2027 borrowing from $29.1 million to $12.3 million

Scenario #2-May 7, 2026 September 3, 2026

**This revised scenario (September 3 changes) delays the need for rate increase ~~by 1 year~~ until FY 2031

- **Reduces total rate increase over next six years by ~~12%~~ 2%**
- *Estimated* Rate Increases

(To maintain the Utility Fund fund balance reserve requirement of 25%)

- FY 2027 – 0%
- FY 2028 – 0%
- **FY 2029 – ~~5%~~ 0%**
- **FY 2030 – ~~15%~~ 0%**
- FY 2031 – ~~0%~~ **2%**
- FY 2032 – 0%

Scenario Rate Comparison

Year	~~Scenario #1~~	Scenario #2 Approved May 7th	September 3, 2026
FY 2027	~~0%~~	0%	0%
FY 2028	~~5%~~	0%	0%
FY 2029	~~27%~~	**5%**	0%
FY 2030	~~0%~~	**15%**	0%
FY 2031	~~0%~~	0%	2%
FY 2032	~~0%~~	0%	0%

TAXPAYER IMPACT STATEMENT

The City of Hutto has proposed a budget for the City's 2026-2027 fiscal year. The City intends to adopt its budget on or before September30, 2026.

Fiscal Year	Median-Valued Homestead (Median Taxable)	Tax Rate per $100 of Value	Estimated Property Tax Bill Based on (Median Taxable)
FY 2025-2026 (Tax Year 2025) As of Last Supplement	$351,580	Adopted 2025 Tax Rate: $0.385928	$1,356.85
FY 2026-2027 (Tax Year 2026) As of Certification	$329,770	2026 No New Revenue Tax Rate: $0.397011	$1,309.22
FY 2026-2027 (Tax Year 2026) As of Certification	$329,770	Proposed 2026 Tax Rate Based on the Proposed Budget for 2026-2027: $0.397011	$1,309.22

** Estimates are based on currently available taxable values and the FY 2026 adopted tax rate. Final FY 2027 tax rates and impact will be determined following receipt of the Certified Appraisal Data and completion of the Truth-in-Taxation calculations.

ORDINANCE NO. O-2026-XXX

AN ORDINANCE MAKING APPROPRIATIONS FOR THE SUPPORT OF THE CITY OF HUTTO DURING THE FISCAL YEAR 2026-2027 FROM OCTOBER 1, 2026, THROUGH SEPTEMBER 30, 2027, AND ADOPTING THE ANNUAL BUDGET OF THE CITY OF HUTTO FOR THE 2026-2027 FISCAL YEAR; PROVIDING FOR A PUBLICATION CLAUSE, SEVERABILITY CLAUSE, AND OPEN MEETING CLAUSE.

WHEREAS, the City of Hutto, Texas (the "City"), is a home rule city operating under the laws of its Charter and the State and Texas, by and through its duly elected City Council members; and

WHEREAS, the new fiscal year commences for the City on October 1, 2026; and

WHEREAS, the City Council finds that the proposed Budget is for legitimate municipal purposes and is in compliance with Texas Local Government Code Chapter 102; and

WHEREAS, pursuant to Texas Local Government Code Section 101.002, the City Council may manage and control the finances of the municipality; and

WHEREAS, the Hutto City Manager has submitted to the City Council a proposed budget of the revenues of said City and the expenditures/expenses of conducting the affairs thereof and providing a complete financial plan for 2026-2027; and

WHEREAS, the budget for the fiscal year October 1, 2026, through September 30, 2027, was duly presented to the City Council and a public hearing was ordered by the City Council and a public notice of said hearing was caused to be given by the City Council and said public hearing was held according to said notice.

NOW, THEREFORE, BE IT ORDAINED BY THE CITY COUNCIL OF THE CITY OF HUTTO, TEXAS:

Section 1. That the appropriations for the fiscal year October 1, 2026, through September 30, 2027, for the support of the general government of the City of Hutto be fixed and determined for said terms in accordance with the expenditures shown in the City's 2027 fiscal year budget, a summary of which is appended hereto as Exhibit A.

Section 2. That the budget, as shown in Exhibit A, is hereby approved in all respects and adopted as the City's budget for the fiscal year October 1, 2026, through September 30, 2027, and incorporated into this Ordinance for all intents and purposes.

Section 3. That there is hereby appropriated the amount shown in said budget the required funds to provide for an Interest and Sinking Fund for the payment of the principal and interest and the retirement of the bonded debt of said City.

Section 4. The City Secretary of the City of Hutto is hereby authorized and directed to publish the caption of this Ordinance in the manner and for the length of time prescribed by law. The City Secretary is hereby directed to file the budget on the website of the City and in the City's official records.

Section 5. The provisions of this Ordinance are severable, and if any sentence, section, or other parts of this Ordinance should be found to be invalid, such invalidity shall not affect the remaining provisions, and the remaining provisions shall continue in full force and effect.

Section 6. All ordinances and resolutions and parts thereof in conflict herewith are hereby expressly repealed insofar as they conflict.

Section 7. The City Council hereby finds and declares that written notice of the date, hour, place, and subject of the meeting at which this Ordinance was adopted was posted and that such meeting was open to the public as required by law at all times during which this ordinance and the subject hereof were discussed, considered, and formerly acted upon, all as required by the Open Meetings Act, Chapter 551, Texas Government Code, as amended.

Section 8. This Ordinance shall take effect and be in force from and after its passage.

READ, PASSED and ADOPTED on the 3rd day of September 2026 at a regular called meeting of the City Council of the City of Hutto, there being a quorum present, by the following roll call vote:

Mayor Snyder	____ ***For***	____ ***against***	____ ***abstain***	____ ***absent***
Councilmember Reynolds	____ ***For***	____ ***against***	____ ***abstain***	____ ***absent***
Councilmember Thornton	____ ***For***	____ ***against***	____ ***abstain***	____ ***absent***
Councilmember Morris	____ ***For***	____ ***against***	____ ***abstain***	____ ***absent***
Councilmember Zepeda	____ ***For***	____ ***against***	____ ***abstain***	____ ***absent***
Mayor Pro Tem Porterfield	____ ***For***	____ ***against***	____ ***abstain***	____ ***absent***
Councilmember King	____ ***For***	____ ***against***	____ ***abstain***	____ ***absent***

CITY OF HUTTO, TEXAS:

_____
Mike Snyder, Mayor

ATTEST:

_____
Laura Hallmark, City Secretary

EXHIBIT "A"
BUDGET FY 2026 - 2027

			General Fund (10)	Debt Service Fund (11)	General Capital Repl Fund (13)	Series 2022 Fund (12)	Series 2023 Fund (14)	Series 2023A Fund (17)	Series 2024 Fund (31)
		Beginning Fund Balance	**11,089,456**	**2,388,845**	**54,706**	**5,513,281**	**469,620**	**1,498,792**	**6,337,169**
		Revenues							
		Property Taxes (net)	16,360,694	6,832,089					
		Sales Tax (net)	10,792,512						
		Occupancy Tax							
		Franchise Fees	1,716,138						
		Interest Earned	551,050	175,000	2,024	220,531	16,437	52,458	221,801
		Charges for Services	673,095						
		Drainage Fees	710,000						
		Permits & Licenses	4,554,695						
		Fines & Fees	783,721						
		Intergovernmental							
		Assessment Revenue							
		Miscellaneous Income							
		Other Financing Sources							
		Transfers from Other Funds	1,159,221	1,407,910	527,500				
		Total Revenues	**37,301,126**	**8,414,999**	**529,524**	**220,531**	**16,437**	**52,458**	**221,801**
		Expenditures							
Admin Svcs	010-	Admin Services	846,447						
Admin Svcs	010-	City Council	741,736						
Admin Svcs	010-	Legal	738,528						
Admin Svcs	010-	Human Resources	702,814						
Admin Svcs	020-	Financial Services	1,797,495		26,250				
Admin Svcs	020-	Municipal Court	720,681						
Dev & Infrastructure	030-	Economic Development	439,474						
Dev & Infrastructure	030-	Development Services	1,674,356						
Dev & Infrastructure	040-	Engineering	1,560,810						
Dev & Infrastructure	040-	Fleet Maintenance	357,221						
Dev & Infrastructure	040-	Facility Maintenance	795,144						
Dev & Infrastructure	040-	Construction Inspection	838,503						
Dev & Infrastructure	040-	Streets & Drainage	4,721,830		62,008				
Strategic Ops	050-	Police	12,234,640		248,963				
Strategic Ops	050-	Emergency Management	373,188						
Strategic Ops	060-	Strategic Operations	350,585						
Strategic Ops	060-	City Secretary	426,528						
Strategic Ops	060-	Communications	512,488						
Strategic Ops	060-	Information Technology	2,378,785		152,099				
Comm Svcs	090-	Community Services	449,630						
Comm Svcs	090-	Library	773,145						
Comm Svcs	090-	Parks & Recreation	2,482,224		61,565				
	100-	Non-Department	851,280	47,805					
	020-	Utility Billing							
	040-	Public Works - Administration							
	040-	Public Works - Engineering							
	040-	Public Works - Operations							
	080-	Waste Management Services							
	500-	Economic Development							
		Bond Expense		8,762,499					
		Capital Outlay				5,170,473	306,257	1,500,000	6,357,416
		Transfer Out	532,500			200,535			140,746
		Total Expenditures	**37,300,032**	**8,810,304**	**550,885**	**5,371,008**	**306,257**	**1,500,000**	**6,498,162**
		Increase (Decrease) to Fund	1,094	(395,305)	(21,361)	(5,150,477)	(289,820)	(1,447,542)	(6,276,361)
		Budgeted Ending Fund Balance	**11,090,550**	**1,993,540**	**33,345**	**362,804**	**179,800**	**51,250**	**60,808**
		Reserve Requirement	9,188,577						
		Fund Balance Percentage	30%						
		Excess (Deficit)	1,901,973						

EXHIBIT "A"
BUDGET FY 2026 - 2027

			Series 2024 GO Fund (32)	Series 2026 Fund (33)	Series 2027 Fund (34)	Series 2027 Fund (39)	Capital Impr. Oper. Fund (60)	Utility Fund (50)
		Beginning Fund Balance	**15,449,905**	**4,041,441**	-	-	**231,671**	**15,353,675**
		Revenues						
		Property Taxes (net)						
		Sales Tax (net)						
		Occupancy Tax						
		Franchise Fees						
		Interest Earned	505,714	175,000			10,093	532,902
		Charges for Services						30,196,650
		Drainage Fees						
		Permits & Licenses						
		Fines & Fees						
		Intergovernmental						
		Assessment Revenue						
		Miscellaneous Income						662,910
		Other Financing Sources			4,700,000	48,000,000		
		Transfers from Other Funds						15,327,373
		Total Revenues	**505,714**	**175,000**	**4,700,000**	**48,000,000**	**10,093**	**46,719,835**
		Expenditures						
Admin Svcs	010-	Admin Services						
	010-	City Council						
	010-	Legal						
	010-	Human Resources						
	020-	Financial Services						
	020-	Municipal Court						
Dev & Infrastructure	030-	Economic Development						
	030-	Development Services						
	040-	Engineering					65,182	
	040-	Fleet Maintenance						
	040-	Facility Maintenance						
	040-	Construction Inspection						
	040-	Streets & Drainage						
Strategic Ops	050-	Police						
	050-	Emergency Management						
	060-	Strategic Operations						
	060-	City Secretary						
	060-	Communications						
	060-	Information Technology						
Comm Svcs	090-	Community Services						
	090-	Library						
	090-	Parks & Recreation					55,000	
	100-	Non-Department						439,341
	020-	Utility Billing						1,308,010
	040-	Public Works - Administration						873,784
	040-	Public Works - Engineering						23,826
	040-	Public Works - Operations						14,842,891
	080-	Waste Management Services						
	500-	Economic Development						
		Bond Expense						29,220,105
		Capital Outlay	15,563,870	3,930,560	4,633,569	48,000,000		
		Transfer Out	330,714	175,000				
		Total Expenditures	**15,894,584**	**4,105,560**	**4,633,569**	**48,000,000**	**120,182**	**46,707,957**
		Increase (Decrease) to Fund	(15,388,870)	(3,930,560)	66,431	-	(110,089)	11,878
		Budgeted Ending Fund Balance	**61,035**	**110,881**	**66,431**	**-**	**121,582**	**15,365,553**
		Reserve Requirement						11,676,989
		Fund Balance Percentage						33%
		Excess (Deficit)						3,688,564

EXHIBIT "A"
BUDGET FY 2026 - 2027

			Utility Impact Fee Fund (52)	Utility Capital Repl Fund (53)	Solid Fund (70)	Series 2022 Fund (57)	Series 2024 CO Fund (58)	Series 2026 CO Fund (54)
		Beginning Fund Balance	**21,914,293**	**143,738**	**69,240**	**872,670**	**75,486,148**	**46,906,506**
		Revenues						
		Property Taxes (net)						
		Sales Tax (net)						
		Occupancy Tax						
		Franchise Fees						
		Interest Earned	876,572	5,318	1,500	30,543	2,642,015	1,650,778
		Charges for Services			3,096,034			
		Drainage Fees						
		Permits & Licenses						
		Fines & Fees	6,384,300		42,000			
		Intergovernmental						
		Assessment Revenue						
		Miscellaneous Income			1,200			
		Other Financing Sources						
		Transfers from Other Funds						
		Total Revenues	**7,260,872**	**5,318**	**3,140,734**	**30,543**	**2,642,015**	**1,650,778**
		Expenditures						
Admin Svcs	010-	Admin Services						
	010-	City Council						
	010-	Legal						
	010-	Human Resources						
	020-	Financial Services						
	020-	Municipal Court						
Dev & Infrastructure	030-	Economic Development						
	030-	Development Services						
	040-	Engineering						
	040-	Fleet Maintenance						
	040-	Facility Maintenance						
	040-	Construction Inspection						
	040-	Streets & Drainage						
Strategic Ops	050-	Police						
	050-	Emergency Management						
	060-	Strategic Operations						
	060-	City Secretary						
	060-	Communications						
	060-	Information Technology						
Comm Svcs	090-	Community Services						
	090-	Library						
	090-	Parks & Recreation						
	100-	Non-Department						
	020-	Utility Billing						
	040-	Public Works - Administration						
	040-	Public Works - Engineering						
	040-	Public Works - Operations		84,401				
	080-	Waste Management Services			2,704,244			
	500-	Economic Development						
		Bond Expense						
		Capital Outlay				-	72,645,081	45,475,239
		Transfer Out	10,518,700		350,000		242,805	685,701
		Total Expenditures	**10,518,700**	**84,401**	**3,054,244**	**-**	**72,887,886**	**46,160,940**
		Increase (Decrease) to Fund	(3,257,828)	(79,083)	86,490	30,543	(70,245,871)	(44,510,162)
		Budgeted Ending Fund Balance	**18,656,465**	**64,655**	**155,730**	**903,213**	**5,240,277**	**2,396,344**
		Reserve Requirement						
		Fund Balance Percentage						
		Excess (Deficit)						

EXHIBIT "A"
BUDGET FY 2026 - 2027

			Series 2027 Fund (66)	Park Improvement Fund (40)	Community Benefit Fee Fund (41)	Transportation Improvement Fund (42)	Business Personal Prop Fund (38)	ESD/City Sales Tax Fund (36)
		Beginning Fund Balance	-	**1,107,972**	**1,694,852**	**7,913,044**	-	**885,327**
		Revenues						
		Property Taxes (net)					42,427	
		Sales Tax (net)						405,981
		Occupancy Tax						
		Franchise Fees						
		Interest Earned		38,779	59,320	276,957		
		Charges for Services				1,300,000		
		Drainage Fees						
		Permits & Licenses						
		Fines & Fees						
		Intergovernmental						
		Assessment Revenue						
		Miscellaneous Income						
		Other Financing Sources	12,300,000	100,000	672,000			
		Transfers from Other Funds						
		Total Revenues	**12,300,000**	**138,779**	**731,320**	**1,576,957**	**42,427**	**405,981**
		Expenditures						
Admin Svcs	010-	Admin Services						
	010-	City Council						
	010-	Legal						
	010-	Human Resources						
	020-	Financial Services						
	020-	Municipal Court						
Dev & Infrastructure	030-	Economic Development						
	030-	Development Services						
	040-	Engineering						
	040-	Fleet Maintenance						
	040-	Facility Maintenance						
	040-	Construction Inspection						
	040-	Streets & Drainage						
Strategic Ops	050-	Police						
	050-	Emergency Management						
	060-	Strategic Operations						
	060-	City Secretary						
	060-	Communications						
	060-	Information Technology						
Comm Svcs	090-	Community Services						
	090-	Library						
	090-	Parks & Recreation						
	100-	Non-Department						
	020-	Utility Billing						
	040-	Public Works - Administration						
	040-	Public Works - Engineering						
	040-	Public Works - Operations						
	080-	Waste Management Services						
	500-	Economic Development						
		Bond Expense						
		Capital Outlay	12,283,000	288,000	864,000	7,913,044		
		Transfer Out						
		Total Expenditures	**12,283,000**	**288,000**	**864,000**	**7,913,044**	-	-
		Increase (Decrease) to Fund	17,000	(149,221)	(132,680)	(6,336,087)	42,427	405,981
		Budgeted Ending Fund Balance	**17,000**	**958,751**	**1,562,172**	**1,576,957**	**42,427**	**1,291,308**
		Reserve Requirement						
		Fund Balance Percentage						
		Excess (Deficit)						

EXHIBIT "A"
BUDGET FY 2026 - 2027

			Hotel Occupancy Tax Fund (24)	Court Tech and Security (Fund 21)	Court Training Fund (22)	Jury Municipal Court Fund (15)	Truancy Municipal Court Fund (16)	PEG Capital Fund (27)
		Beginning Fund Balance	**1,706,886**	**57,738**	**3,792**	**1,569**	**72,923**	**221,090**
		Revenues						
		Property Taxes (net)						
		Sales Tax (net)						
		Occupancy Tax	395,200					
		Franchise Fees						25,000
		Interest Earned	55,500	3,640	140	45	2,400	5,100
		Charges for Services						
		Drainage Fees						
		Permits & Licenses						
		Fines & Fees		34,464	12	515	20,000	
		Intergovernmental						
		Assessment Revenue						
		Miscellaneous Income						
		Other Financing Sources						
		Transfers from Other Funds						
		Total Revenues	**450,700**	**38,104**	**152**	**560**	**22,400**	**30,100**
		Expenditures						
Admin Svcs	010-	Admin Services						
	010-	City Council						
	010-	Legal						
	010-	Human Resources						
	020-	Financial Services						
	020-	Municipal Court		2,500				
Dev & Infrastructure	030-	Economic Development						
	030-	Development Services						
	040-	Engineering						
	040-	Fleet Maintenance						
	040-	Facility Maintenance						
	040-	Construction Inspection						
	040-	Streets & Drainage						
Strategic Ops	050-	Police		18,500				
	050-	Emergency Management						
	060-	Strategic Operations						
	060-	City Secretary						
	060-	Communications						29,021
	060-	Information Technology						
Comm Svcs	090-	Community Services						
	090-	Library						
	090-	Parks & Recreation						
	100-	Non-Department						
	020-	Utility Billing						
	040-	Public Works - Administration						
	040-	Public Works - Engineering						
	040-	Public Works - Operations						
	080-	Waste Management Services						
	500-	Economic Development						
		Bond Expense						
		Capital Outlay						
		Transfer Out		30,168				
		Total Expenditures	**-**	**51,168**	**-**	**-**	**-**	**29,021**
		Increase (Decrease) to Fund	450,700	(13,064)	152	560	22,400	1,079
		Budgeted Ending Fund Balance	**2,157,586**	**44,674**	**3,944**	**2,129**	**95,323**	**222,169**
		Reserve Requirement						
		Fund Balance Percentage						
		Excess (Deficit)						

EXHIBIT "A"
BUDGET FY 2026 - 2027

			Police LEOSE Fund (18)	Police Seizure Fund (25)	Economic Dev. Corp Fund (35)	TIRZ #1 Co op Fund (84)	TIRZ #2 Fund (95)	TIRZ #3 Megasite Fund (96)
		Beginning Fund Balance	**9,026**	**40,522**	**12,056,028**	**507,052**	**51,359**	**11,684**
		Revenues						
		Property Taxes (net)				134,245	106,357	490,821
		Sales Tax (net)			3,744,607			
		Occupancy Tax						
		Franchise Fees						
		Interest Earned	165	1,100	437,689	12,500	1,500	409
		Charges for Services						
		Drainage Fees						
		Permits & Licenses						
		Fines & Fees						
		Intergovernmental						
		Assessment Revenue						
		Miscellaneous Income						
		Other Financing Sources			470,000			
		Transfers from Other Funds			34,692,327			
		Total Revenues	**165**	**1,100**	**39,344,623**	**146,745**	**107,857**	**491,230**
		Expenditures						
Admin Svcs	010-	Admin Services						
	010-	City Council						
	010-	Legal						2,500
	010-	Human Resources						
	020-	Financial Services						
	020-	Municipal Court						
Dev & Infrastructure	030-	Economic Development				4,250		
	030-	Development Services						
	040-	Engineering						
	040-	Fleet Maintenance						
	040-	Facility Maintenance						
	040-	Construction Inspection						
	040-	Streets & Drainage						
Strategic Ops	050-	Police	8,900	20,000				
	050-	Emergency Management						
	060-	Strategic Operations						
	060-	City Secretary						
	060-	Communications						
	060-	Information Technology						
Comm Svcs	090-	Community Services						
	090-	Library						
	090-	Parks & Recreation						
	100-	Non-Department						
	020-	Utility Billing						
	040-	Public Works - Administration						
	040-	Public Works - Engineering						
	040-	Public Works - Operations						
	080-	Waste Management Services						
	500-	Economic Development			1,488,763			
		Bond Expense			8,493,161			
		Capital Outlay			34,914,827			
		Transfer Out				142,495		471,250
		Total Expenditures	**8,900**	**20,000**	**44,896,751**	**146,745**	**-**	**473,750**
		Increase (Decrease) to Fund	(8,735)	(18,900)	(5,552,128)	-	107,857	17,480
		Budgeted Ending Fund Balance	**291**	**21,622**	**6,503,900**	**507,052**	**159,216**	**29,164**
		Reserve Requirement						
		Fund Balance Percentage						
		Excess (Deficit)						

EXHIBIT "A"
BUDGET FY 2026 - 2027

			Cottonwood Development Corporation Fund (76)	River Creek PID Fund (45)	Emory Crossing PID Fund (75)	Cottonwood Creek PID Fund (81)	Durango Farms PID Fund (79)	Estates Hutto PID Fund (82)
		Beginning Fund Balance	-	**3,958,337**	**3,515,027**	**3,288,631**	**2,707,096**	**5,731**
		Revenues						
		Property Taxes (net)						
		Sales Tax (net)						
		Occupancy Tax						
		Franchise Fees						
		Interest Earned		167,500	115,000	225,000	117,500	3,000
		Charges for Services						
		Drainage Fees						
		Permits & Licenses						
		Fines & Fees						
		Intergovernmental						
		Assessment Revenue		2,484,162	1,136,940	1,441,903	807,706	
		Miscellaneous Income						
		Other Financing Sources						
		Transfers from Other Funds	5,000					
		Total Revenues	**5,000**	**2,651,662**	**1,251,940**	**1,666,903**	**925,206**	**3,000**
		Expenditures						
Admin Svcs	010-	Admin Services						
	010-	City Council						
	010-	Legal						
	010-	Human Resources						
	020-	Financial Services						
	020-	Municipal Court						
Dev & Infrastructure	030-	Economic Development	5,000	129,958	55,000	83,028	39,650	3,000
	030-	Development Services						
	040-	Engineering						
	040-	Fleet Maintenance						
	040-	Facility Maintenance						
	040-	Construction Inspection						
	040-	Streets & Drainage						
Strategic Ops	050-	Police						
	050-	Emergency Management						
	060-	Strategic Operations						
	060-	City Secretary						
	060-	Communications						
	060-	Information Technology						
Comm Svcs	090-	Community Services						
	090-	Library						
	090-	Parks & Recreation						
	100-	Non-Department						
	020-	Utility Billing						
	040-	Public Works - Administration						
	040-	Public Works - Engineering						
	040-	Public Works - Operations						
	080-	Waste Management Services						
	500-	Economic Development						
		Bond Expense		2,336,173	995,931	1,147,307	710,404	
		Capital Outlay						
		Transfer Out						
		Total Expenditures	**5,000**	**2,466,131**	**1,050,931**	**1,230,335**	**750,054**	**3,000**
		Increase (Decrease) to Fund	-	185,531	201,009	436,568	175,152	-
		Budgeted Ending Fund Balance	**-**	**4,143,868**	**3,716,036**	**3,725,199**	**2,882,248**	**5,731**
		Reserve Requirement						
		Fund Balance Percentage						
		Excess (Deficit)						

EXHIBIT "A"
BUDGET FY 2026 - 2027

			Meadow-Brook PID Fund (83)	Limmer Square PID Fund (93)	Prairie Winds PID Fund (92)	Stromberg PID Fund (97)	Hwy 130 Mixed Use Fund (94)	Gateway PID Fund (69)	South Fork Ranch MUD Fund (87)
		Beginning Fund Balance	**6,245**	**-**	**7,328,259**	**-**	**1,456**	**-**	**48,568**
		Revenues							
		Property Taxes (net)							
		Sales Tax (net)							
		Occupancy Tax							
		Franchise Fees							
		Interest Earned	3,000	1,870	172,500	13,500	6,794	750	1,400
		Charges for Services							
		Drainage Fees							
		Permits & Licenses							
		Fines & Fees							
		Intergovernmental							
		Assessment Revenue			1,342,927				
		Miscellaneous Income		47,630				9,750	
		Other Financing Sources							
		Transfers from Other Funds							
		Total Revenues	**3,000**	**49,500**	**1,515,427**	**13,500**	**6,794**	**10,500**	**1,400**
		Expenditures							
Admin Svcs	010-	Admin Services							
	010-	City Council							
	010-	Legal							
	010-	Human Resources							
	020-	Financial Services							
	020-	Municipal Court							
Dev & Infrastructure	030-	Economic Development	3,000	49,500	103,974	13,500	8,250	10,500	150
	030-	Development Services							
	040-	Engineering							
	040-	Fleet Maintenance							
	040-	Facility Maintenance							
	040-	Construction Inspection							
	040-	Streets & Drainage							
Strategic Ops	050-	Police							
	050-	Emergency Management							
	060-	Strategic Operations							
	060-	City Secretary							
	060-	Communications							
	060-	Information Technology							
Comm Svcs	090-	Community Services							
	090-	Library							
	090-	Parks & Recreation							
	100-	Non-Department							
	020-	Utility Billing							
	040-	Public Works - Administration							
	040-	Public Works - Engineering							
	040-	Public Works - Operations							
	080-	Waste Management Services							
	500-	Economic Development							
		Bond Expense			1,157,469				
		Capital Outlay			5,824,033				
		Transfer Out							
		Total Expenditures	**3,000**	**49,500**	**7,085,476**	**13,500**	**8,250**	**10,500**	**150**
		Increase (Decrease) to Fund	-	-	(5,570,049)	-	(1,456)	-	1,250
		Budgeted Ending Fund Balance	**6,245**	**-**	**1,758,210**	**-**	**-**	**-**	**49,818**
		Reserve Requirement							
		Fund Balance Percentage							
		Excess (Deficit)							

EXHIBIT "A"
BUDGET FY 2026 - 2027

			Walther Farms MUD Fund (88)	Star Ranch MUD Fund (89)	Lakeside MUD Fund (85)	Total All Funds
		Beginning Fund Balance	**56,959**	**56,906**	**30,828**	**255,166,063**
		Revenues				-
		Property Taxes (net)				23,966,633
		Sales Tax (net)				14,943,100
		Occupancy Tax				395,200
		Franchise Fees				1,741,138
		Interest Earned	1,500	1,500	900	9,396,694
		Charges for Services				35,265,779
		Drainage Fees				710,000
		Permits & Licenses				4,554,695
		Fines & Fees				7,265,012
		Intergovernmental				-
		Assessment Revenue				7,213,638
		Miscellaneous Income				721,490
		Other Financing Sources				66,242,000
		Transfers from Other Funds				53,119,331
		Total Revenues	**1,500**	**1,500**	**900**	**225,534,710**
		Expenditures				
Admin Svcs	010-	Admin Services				846,447
	010-	City Council				741,736
	010-	Legal				741,028
	010-	Human Resources				702,814
	020-	Financial Services				1,823,745
	020-	Municipal Court				723,181
Dev & Infrastructure	030-	Economic Development	2,500		3,000	953,734
	030-	Development Services				1,674,356
	040-	Engineering				1,625,992
	040-	Fleet Maintenance				357,221
	040-	Facility Maintenance				795,144
	040-	Construction Inspection				838,503
	040-	Streets & Drainage				4,783,838
Strategic Ops	050-	Police				12,531,003
	050-	Emergency Management				373,188
	060-	Strategic Operations				350,585
	060-	City Secretary				426,528
	060-	Communications				541,509
	060-	Information Technology				2,530,884
Comm Svcs	090-	Community Services				449,630
	090-	Library				773,145
	090-	Parks & Recreation				2,598,789
	100-	Non-Department				1,338,426
	020-	Utility Billing				1,308,010
	040-	Public Works - Administration				873,784
	040-	Public Works - Engineering				23,826
	040-	Public Works - Operations				14,927,292
	080-	Waste Management Services				2,704,244
	500-	Economic Development				1,488,763
		Bond Expense				52,823,049
		Capital Outlay				265,669,369
		Transfer Out				13,820,614
		Total Expenditures	**2,500**	**-**	**3,000**	**392,160,377**
		Increase (Decrease) to Fund	(1,000)	1,500	(2,100)	(166,625,667)
		Budgeted Ending Fund Balance	**55,959**	**58,406**	**28,728**	**88,540,396**
		Reserve Requirement				
		Fund Balance Percentage				
		Excess (Deficit)				

AGENDA ITEM REPORT
9.4.

To:	City Council
Subject:	Consideration and possible action on Resolution No. R-2026-173 ratifying the property tax increase reflected in the City of Hutto Fiscal Year 2026-2027 operating budget. (Alberta Barrett)
Meeting:	Thursday, September 3, 2026
Department:	Finance /
Staff Contact:	Alberta Barrett

ITEM SUMMARY:

Based on the 0.397011 proposed tax rate, which is the No New Revenue Rate (NNR), the revenues budgeted will be as follows:

Fund	FY 2027 Rate	Revenues
General Fund (M&O)	0.280331	$16,348,414
Debt Service Fund (I&S)	0.116680	$6,804,574
Total	0.397011	$23,152,988

In accordance with Texas Local Government Code Section 102.007, adoption of a budget that will require raising more revenue from property taxes than in the previous year requires a separate vote of the City to ratify the property tax increase reflected in the budget.

STAFF RECOMMENDATION:

Ratification: Whereas, this budget will raise more revenue from property taxes than last year's budget by an amount of $960,485 which is a 4.33% increase from last year. The property tax revenue to be raised from new properties added to the tax roll this year is $1,351,848.

"I MOVE TO RATIFY THE PROPERTY TAX INCREASE REFLECTED IN THE BUDGET FOR FISCAL YEAR 2026-2027 OF THE CITY OF HUTTO, TEXAS."

FISCAL NOTES:

There is no fiscal note to this item.

ATTACHMENTS:

1. Proposed R-2026 Ratifying Property Tax in Budget FY 2026-2027
2. FY 2027 Tax Disclosure

3. Taxpayer Impact Statement

RESOLUTION NO. R-2026-XXX

A RESOLUTION OF THE CITY OF HUTTO RATIFYING THE MUNICIPAL BUDGET FOR FISCAL YEAR 2026-2027 WHICH RAISES MORE REVENUE FROM PROPERTY TAXES THAN THE PREVIOUS FISCAL YEAR; PROVIDING FOR A PUBLICATION CLAUSE, SEVERABILITY CLAUSE, AND OPEN MEETING CLAUSE.

WHEREAS, the City of Hutto, Texas (the "City"), is a home rule city operating under the laws of its Charter and the State and Texas, by and through its duly elected City Council members; and

WHEREAS, the new fiscal year commences for the City on October 1, 2026; and

WHEREAS, the City Council finds that the proposed Budget is for legitimate municipal purposes and is in compliance with Texas Local Government Code Chapter 102; and

WHEREAS, the Hutto City Manager has submitted to the City Council a proposed budget of the revenues of said City and the expenditures/expenses of conducting the affairs thereof and providing a complete financial plan for 2026-2027; and

WHEREAS, the Budget as adopted raises more revenue from property taxes than the previous year's budget; and

WHEREAS, pursuant to Texas Local Government Code Section 102.007, the City Council shall ratify the property tax increase reflected in the budget; and

WHEREAS, the budget for the fiscal year October 1, 2026, through September 30, 2027, was duly presented to the City Council and a public hearing was ordered by the City Council and a public notice of said hearing was caused to be given by the City Council and said public hearing was held according to said notice.

NOW, THEREFORE, BE IT RESOLVED BY THE CITY COUNCIL OF THE CITY OF HUTTO, TEXAS:

Section 1. The foregoing recitals are incorporated into this Resolution by reference as findings of fact as if expressly set forth herein.

Section 2. The City Council of the City of Hutto hereby ratifies the adopted budget for Fiscal Year 2026-2027, which raises more revenue from property taxes than the previous fiscal year's budget.

Section 3. The City Secretary of the City of Hutto is hereby authorized and directed to publish the caption of this Resolution in the manner and for the length of time prescribed by law. The City Secretary is hereby directed to file the budget on the website of the City and in the City's official records.

Section 4. The provisions of this Resolution are severable, and if any sentence, section, or other parts of this Resolution should be found to be invalid, such invalidity shall not affect the remaining provisions, and the remaining provisions shall continue in full force and effect.

Section 5. All Resolutions and parts thereof in conflict herewith are hereby expressly repealed insofar as they conflict.

Section 6. The City Council hereby finds and declares that written notice of the date, hour, place, and subject of the meeting at which this Resolution was adopted was posted and that such meeting was open to the public as required by law at all times during which this Resolution and the subject hereof were discussed, considered, and formerly acted upon, all as required by the Open Meetings Act, Chapter 551, Texas Government Code, as amended.

Section 7. This Resolution shall take effect and be in force from and after its passage.

READ, PASSED and **ADOPTED** on the 3rd day of September 2026 at a special meeting of the City Council of the City of Hutto, there being a quorum present, by the following roll call vote:

Mayor Snyder	____	***For***	____	***against***	____	***abstain***	____ ***absent***
Councilmember Reynolds	____	***For***	____	***against***	____	***abstain***	____ ***absent***
Councilmember Thornton	____	***For***	____	***against***	____	***abstain***	____ ***absent***
Councilmember Morris	____	***For***	____	***against***	____	***abstain***	____ ***absent***
Councilmember Zepeda	____	***For***	____	***against***	____	***abstain***	____ ***absent***
Mayor Pro Tem Porterfield	____	***For***	____	***against***	____	***abstain***	____ ***absent***
Councilmember King	____	***For***	____	***against***	____	***abstain***	____ ***absent***

CITY OF HUTTO, TEXAS

_____
Mike Snyder, Mayor

ATTEST:

_____
Laura Hallmark, City Secretary

City of Hutto, Texas

Fiscal Year 2027 Proposed Budget

This budget will raise more revenue from property taxes than last year's budget by an amount of $960,485 which is a 4.33% increase from last year. The property tax revenue to be raised from new properties added to the tax roll this year is $1,351,848.

Governing Body	Record Vote
Mike Snyder, Mayor	
Jerrel W. Reynolds	
Dan Thornton	
Jim Morris	
Corina I. Zepeda	
Evan Porterfield	
Aaron King	

Property Tax Comparison

	FY 2026	FY 2027
Property Tax Rate	0.385928	0.397011
No New Revenue Tax Rate	0.385928	0.397011
No New Revenue M&O Tax Rate	0.256755	0.259525
Voter Approval Tax Rate	0.453750	0.428517
Debt Rate (I&S)	0.133120	0.116680
De Minimis Rate	0.398570	0.384778

Outstanding Debt Obligation (Principal and Interest)

Type of Debt	Total Outstanding Debt	Current Year Debt
Property Tax Supported	$178,569,799	$8,762,499
Self-supporting debt	$890,720,016	$29,212,706
Total Debt	$1,069,289,815	$37,975,205

In accordance with Section 140.0045, the State of Texas Local Government Code, the City of Hutto is expected to spend for the year ending September 30, 2026 and has budgeted for the year ending September 30, 2027 the following amounts, respectively:

- Notices required by law to be published in a newspaper: $32,000 and $40,000
- Lobbying activities: $0 and $0

TAXPAYER IMPACT STATEMENT

The City of Hutto has proposed a budget for the City's 2026-2027 fiscal year. The City intends to adopt its budget on or before September30, 2026.

Fiscal Year	Median-Valued Homestead (Median Taxable)	Tax Rate per $100 of Value	Estimated Property Tax Bill Based on (Median Taxable)
FY 2025-2026 (Tax Year 2025) As of Last Supplement	$351,580	Adopted 2025 Tax Rate: $0.385928	$1,356.85
FY 2026-2027 (Tax Year 2026) As of Certification	$329,770	2026 No New Revenue Tax Rate: $0.397011	$1,309.22
FY 2026-2027 (Tax Year 2026) As of Certification	$329,770	Proposed 2026 Tax Rate Based on the Proposed Budget for 2026-2027: $0.397011	$1,309.22

** Estimates are based on currently available taxable values and the FY 2026 adopted tax rate. Final FY 2027 tax rates and impact will be determined following receipt of the Certified Appraisal Data and completion of the Truth-in-Taxation calculations.

AGENDA ITEM REPORT
9.5.

To:	City Council
Subject:	Conduct a public hearing and related items in consideration and possible action to approve Ordinance No. O-2026-045 of the City of Hutto, Texas, levying Ad Valorem Taxes for the use and support of the municipal government for the City of Hutto for the Fiscal Year 2026-2027. (Alberta Barrett)
Meeting:	Thursday, September 3, 2026
Department:	Finance /
Staff Contact:	Alberta Barrett

ITEM SUMMARY:

Texas Tax Code Section 26 requires each municipality to hold a public hearing on the proposed tax rate before adoption. The proposed tax rate of 0.397011 is the No New Revenue Rate (NNR) and the attached ordinance with the following motion:

I MOVE THAT THE TAX RATE WILL RAISE MORE TAXES FOR MAINTENANCE AND OPERATIONS THAN LAST YEAR'S TAX RATE. THE TAX RATE WILL EFFECTIVELY BE INCREASED BY 5.09% AND WILL INCREASE TAXES FOR MAINTENANCE AND OPERATIONS ON A $100,000 HOME BY APPROXIMATELY $13.57.

STAFF RECOMMENDATION:

Open, allow public comment at three (3) minutes each, and close a public hearing on the proposed tax rate of the 2026 tax year and inclusion in the FY 2026-2027 Budget.

FISCAL NOTES:

The fiscal and operation plan for FY 2026-2027.

ATTACHMENTS:

1. Proposed O-2026 Levying Ad Valorem Taxes 2026
2. Tax Rate Worksheet and Backup for Council

ORDINANCE O-2026-XXX

AN ORDINANCE LEVYING AD VALOREM TAXES FOR THE USE AND SUPPORT OF THE MUNICIPAL GOVERNMENT FOR THE CITY OF HUTTO FOR THE TAX YEAR 2026; PROVIDING FOR APPORTIONING EACH LEVY FOR A SPECIFIC PURPOSE; AND, PROVIDING WHEN TAXES SHALL BECOME DUE AND WHEN SAME SHALL BECOME DELINQUENT IF NOT PAID; AND PROVIDING FOR A PUBLICATION CLAUSE, SEVERABILITY CLAUSE, AND REPEALING CLAUSE.

NOW, THEREFORE, BE IT ORDAINED BY THE CITY COUNCIL OF THE CITY OF HUTTO, TEXAS:

Section 1. That there is hereby levied and there shall be collected for the use and support of the Municipal Government of the City of Hutto, upon all property, real personal and mixed, within the corporate limits of said City subject to taxation a tax of $0.397011 on each $100.00 valuation of property, said tax being levied and apportioned to the specific purpose herein set forth.

1. For the Maintenance and Operations of the general government (General Fund), a rate of $0.280331 on each $100.00 valuation of property; and
2. For debt service on bond sold for the support of general government, a rate of $0.116680 on each $100.00 valuation of property.

THIS TAX RATE WILL RAISE MORE TAXES FOR MAINTENANCE AND OPERATIONS THAN LAST YEAR'S TAX RATE. THE TAX RATE WILL EFFECTIVELY BE INCREASED BY 5.09% AND WILL INCREASE TAXES FOR MAINTENANCE AND OPERATIONS ON A $100,000.00 HOME WILL BE APPROXIMATELY $13.57.

Section 2. That the Taxes levied under this ordinance shall be due October 1, 2026, and if not paid on or before January 31, 2027, shall become delinquent.

Section 3. All Taxes shall become a lien upon the property against which assessed, and the City Tax Assessor and Collector of the City of Hutto is hereby authorized and empowered to enforce the collection of such Taxes according to the Constitution and Laws of the State of Texas and ordinances of the City of Hutto and shall, by virtue of the tax rolls, fix and establish a lien by levying upon such property whether real or personal, for the payment of said taxes, penalty and interest, and the interest and penalty collected from such delinquent taxes shall be apportioned to the General Fund of the City of Hutto. All delinquent taxes shall bear interest from the date of delinquency at the rate as prescribed by State Law.

Section 4. The City Secretary of the City of Hutto is hereby authorized and directed to publish the caption of this Ordinance in the manner and for the length of time prescribed by law. The City Secretary shall cause the following notice to be posted on the homepage of the City's internet website:

THE CITY OF HUTTO ADOPTED A TAX RATE THAT WILL INCREASE TAXES FOR MAINTENANCE AND OPERATIONS MORE THAN LAST YEAR'S TAX RATE. THE TAX

RATE WILL EFFECTIVELY BE INCREASED BY 5.099% AND WILL INCREASE TAXES FOR MAINTENANCE AND OPERATIONS ON A $100,000.00 HOME WILL BE APPROXIMATELY $13.57.

Section 5. The provisions of this ordinance are severable, and if any sentence, section, or other parts of this Ordinance should be found to be invalid, such invalidity shall not affect the remaining provisions, and the remaining provisions shall continue in full force and effect.

Section 6. All ordinances and resolutions and parts thereof in conflict herewith are hereby expressly repealed insofar as they conflict.

Section 7. The City Council hereby finds and declares that written notice of the date, hour, place, and subject of the meeting at which this Ordinance was adopted was posted and that such meeting was open to the public as required by law at all times during which this Ordinance and the subject hereof were discussed, considered, and formerly acted upon, all as required by the Open Meetings Act, Chapter 551, Texas Government Code, as amended.

Section 8. This ordinance shall take effect and be in force from and after its passage.

READ, PASSED and ADOPTED on this 3rd day of September 2026 at a regular called meeting of the City Council of the City of Hutto, there being a quorum present, by the following roll call vote:

Mayor Snyder	____ ***For***	____ ***against***	____ ***abstain***	____ ***absent***
Councilmember Reynolds	____ ***For***	____ ***against***	____ ***abstain***	____ ***absent***
Councilmember Thornton	____ ***For***	____ ***against***	____ ***abstain***	____ ***absent***
Councilmember Morris	____ ***For***	____ ***against***	____ ***abstain***	____ ***absent***
Councilmember Zepeda	____ ***For***	____ ***against***	____ ***abstain***	____ ***absent***
Mayor Pro Tem Porterfield	____ ***For***	____ ***against***	____ ***abstain***	____ ***absent***
Councilmember King	____ ***For***	____ ***against***	____ ***abstain***	____ ***absent***

CITY OF HUTTO, TEXAS

_____
Mike Snyder, Mayor

ATTEST:

_____
Laura Hallmark, City Secretary

2026 Tax Rate Calculation Worksheet
Taxing Units Other Than School Districts or Water Districts

Form 50-856

City of Hutto
Taxing Unit Name

(512) 759-4839
Phone *(area code and number)*

500 W Live Oak Street, Hutto, TX, 78634-3179
Taxing Unit's Address, City, State, ZIP Code

https://www.huttotx.gov
Taxing Unit's Website Address

GENERAL INFORMATION: Tax Code Section 26.04(c) requires an officer or employee designated by the governing body to calculate the no-new-revenue (NNR) tax rate and voter-approval tax rate for the taxing unit. These tax rates are expressed in dollars per $100 of taxable value calculated. The calculation process starts after the chief appraiser delivers to the taxing unit the certified appraisal roll and the estimated values of properties under protest. The designated officer or employee shall certify that the officer or employee has accurately calculated the tax rates and used values shown for the certified appraisal roll or certified estimate. The officer or employee submits the rates to the governing body by Aug. 7 or as soon thereafter as practicable.

School districts do not use this form, but instead use Comptroller Form 50-859 *Tax Rate Calculation Worksheet, School District without Chapter 313 and JETI Agreements* or Comptroller Form 50-884 *Tax Rate Calculation Worksheet, School District with Chapter 313 and JETI Agreements.*

Water districts as defined under Water Code Section 49.001(1) do not use this form, but instead use Comptroller Form 50-858 *Water District Voter-Approval Tax Rate Worksheet for Low Tax Rate and Developing Districts* or Comptroller Form 50-860 *Developed Water District Voter-Approval Tax Rate Worksheet.*

The Comptroller's office provides this worksheet to assist taxing units in determining tax rates. The information provided in this worksheet is offered as technical assistance and not legal advice. Taxing units should consult legal counsel for interpretations of law regarding tax rate preparation and adoption.

Taxing units must include a hyperlink to a document that evidences the accuracy of each entry in the worksheet other than an entry making a mathematical calculation.[1] Source materials must contain data for all worksheets used, including supplemental worksheets.

Insert hyperlink:

https://www.wilcotx.gov/DocumentCenter/View/20673/City-of-Hutto

SECTION 1: No-New-Revenue Tax Rate

The NNR tax rate enables the public to evaluate the relationship between taxes for the prior year and for the current year based on a tax rate that would produce the same amount of taxes (no new taxes) if applied to the same properties that are taxed in both years. When appraisal values increase, the NNR tax rate should decrease.

The NNR tax rate for a county is the sum of the NNR tax rates calculated for each type of tax the county levies.

While uncommon, it is possible for a taxing unit to provide an exemption for only maintenance and operations taxes. In this case, the taxing unit will need to calculate the NNR tax rate separately for the maintenance and operations tax and the debt tax, then add the two components together.

Line	No-New-Revenue Tax Rate Worksheet	Amount/Rate
1.	**Prior year total taxable value.** Enter the amount of the prior year taxable value on the prior year tax roll today. Include any adjustments since last year's certification; exclude Tax Code Section 25.25(d) one-fourth and one-third over-appraisal corrections from these adjustments. Exclude any property value subject to an appeal under Chapter 42 as of July 25 (will add undisputed value in Line 6). This total includes the taxable value of homesteads with tax ceilings (will deduct in Line 2) and the captured value for tax increment financing (adjustment is made by deducting TIF taxes, as reflected in Line 17).[2]	Attachment A - Line 6A $ 6,121,567,295
2.	**Prior year tax ceilings.** Counties, cities and junior college districts. Enter the prior year total taxable value of homesteads with tax ceilings. These include the homesteads of homeowners age 65 or older or disabled. Other taxing units enter 0. If your taxing unit adopted the tax ceiling provision last year or a prior year for homeowners age 65 or older or disabled, use this step.[3]	Attachment A $ 461,425,383
3.	**Preliminary prior year adjusted taxable value.** Subtract Line 2 from Line 1.	$ 5,660,141,912
4.	**Prior year total adopted tax rate.** Attachment A	$ 0.385928 /$100
5.	**Prior year taxable value lost because court appeals of ARB decisions reduced the prior year's appraised value.**	
	A. Original prior year ARB values:	$ 86,454,879 Attachment A
	B. Prior year values resulting from final court decisions:	- $ 80,648,753 Attachment A
	C. Prior year value loss. Subtract B from A.[4]	$ 5,806,126

[1] Tex. Tax Code §§5.07(g)(4) and 26.04(d-1)
[2] Tex. Tax Code §26.012(14)
[3] Tex. Tax Code §26.012(14)
[4] Tex. Tax Code §26.012(13)

Line	No-New-Revenue Tax Rate Worksheet	Amount/Rate
6.	**Prior year taxable value subject to an appeal under Chapter 42, as of July 25.**	
	A. Prior year ARB certified value: $ 85,987,112	Attachment A
	B. Prior year disputed value: - $ 6,019,098	Attachment A
	C. Prior year undisputed value. Subtract B from A. [5]	$ 79,968,014
7.	**Prior year Chapter 42 related adjusted values.** Add Line 5C and Line 6C.	$ 85,774,140
8.	**Prior year taxable value, adjusted for actual and potential court-ordered adjustments.** Add Line 3 and Line 7.	$ 5,745,916,052
9.	**Prior year taxable value of property in territory the taxing unit deannexed after Jan. 1 of the prior year.** Enter the prior year value of property in deannexed territory. [6]	$ 0
10.	**Prior year taxable value lost because property first qualified for an exemption in the current year.** If the taxing unit increased an original exemption, use the difference between the original exempted amount and the increased exempted amount. Do not include value lost due to freeport, goods-in-transit, temporary disaster exemptions. Note that lowering the amount or percentage of an existing exemption in the current year does not create a new exemption or reduce taxable value.	
	A. Absolute exemptions. Use prior year market value: $ 0	Attachment A
	B. Partial exemptions. Current year exemption amount or current year percentage exemption times prior year value: + $ 35,172,132	Attachment A
	C. Value loss. Add A and B. [7]	$ 35,172,132
11.	**Prior year taxable value lost because property first qualified for agricultural appraisal (1-d or 1-d-1), timber appraisal, recreational/ scenic appraisal or public access airport special appraisal in the current year.** Use only properties that qualified for the first time in the current year; do not use properties that qualified in the prior year.	
	A. Prior year market value: $ 0	Attachment A
	B. Current year productivity or special appraised value: - $ 0	Attachment A
	C. Value loss. Subtract B from A. [8]	$ 0
12.	**Total adjustments for lost value.** Add Lines 9, 10C and 11C.	$ 35,172,132
13.	**Prior year captured value of property in a TIF.** Enter the total value of the prior year captured appraised value of property taxable by a taxing unit in a tax increment financing zone for which the prior year taxes were deposited into the tax increment fund. [9] If the taxing unit has no captured appraised value in line 18D, enter 0.	Attachment B $ 90,296,689
14.	**Prior year total value.** Subtract Line 12 and Line 13 from Line 8.	$ 5,620,447,231
15.	**Adjusted prior year total levy.** Multiply Line 4 by Line 14 and divide by $100.	$ 21,690,879
16.	**Taxes refunded for years preceding the prior tax year.** Enter the amount of taxes refunded by the taxing unit for tax years preceding the prior tax year. Types of refunds include court decisions, Tax Code Section 25.25(b) and (c) corrections and Tax Code Section 31.11 payment errors. Do not include refunds for the prior tax year. This line applies only to tax years preceding the prior tax year. [10]	Given by County $ 110,298
17.	**Adjusted prior year levy with refunds.** Add Lines 15 and 16. [11]	$ 21,801,177

[5] Tex. Tax Code §26.012(13)
[6] Tex. Tax Code §26.012(15)
[7] Tex. Tax Code §26.012(15)
[8] Tex. Tax Code §26.012(15)
[9] Tex. Tax Code §26.03(c)
[10] Tex. Tax Code §26.012(13)
[11] Tex. Tax Code §26.012(13) and (15)

Line	No-New-Revenue Tax Rate Worksheet	Amount/Rate
18.	**Total current year taxable value on the current year certified appraisal roll today.** This value includes only certified values or certified estimate of values and includes the total taxable value of homesteads with tax ceilings (will deduct in Line 20). These homesteads include homeowners age 65 or older or disabled. [12]	
	A. Certified values: $ 6,343,049,563 Attachment A	
	B. Counties: Include railroad rolling stock values certified by the Comptroller's office: + $ 0	
	C. Pollution control and energy storage system exemption: Deduct the value of property exempted for the current tax year for the first time as pollution control or energy storage system property: - $ 0	
	D. Tax increment financing: Deduct the current year captured appraised value of property taxable by a taxing unit in a tax increment reinvestment zone for which the current year taxes will be deposited into the tax increment fund. Do not include any new property value that will be included in Line 24 below. [13] Sum of Attachment C's Adjustments to the taxable value must be calculated separately for each reinvestment zone using Form 50-110.[14] Enter the total from Form 50-110 - $ 184,089,921	
	E. Total current year value. Add A and B, then subtract C and D.	$ 6,158,959,642
19.	**Total value of properties under protest or not included on certified appraisal roll.** [15]	
	A. Current year taxable value of properties under protest. The chief appraiser certifies a list of properties still under ARB protest. The list shows the appraisal district's value and the taxpayer's claimed value, if any, or an estimate of the value if the taxpayer wins. For each of the properties under protest, use the lowest of these values. Enter the total value under protest. [16] $ 101,770,409 Attachment A	
	B. Current year value of properties not under protest or included on certified appraisal roll. The chief appraiser gives taxing units a list of those taxable properties that the chief appraiser knows about but are not included in the appraisal roll certification. These properties also are not on the list of properties that are still under protest. On this list of properties, the chief appraiser includes the market value, appraised value and exemptions for the preceding year and a reasonable estimate of the market value, appraised value and exemptions for the current year. Use the lower market, appraised or taxable value (as appropriate). Enter the total value of property not on the certified roll. [17] + $ 0	
	C. Total value under protest or not certified. Add A and B.	$ 101,770,409
20.	**Current year tax ceilings.** Counties, cities and junior colleges enter current year total taxable value of homesteads with tax ceilings. These include the homesteads of homeowners age 65 or older or disabled. Other taxing units enter 0. If your taxing unit adopted the tax ceiling provision in the prior year or a previous year for homeowners age 65 or older or disabled, use this step.[18]	Attachment A $ 428,904,748
21.	**Anticipated contested value.** Affected taxing units enter the contested taxable value for all property that is subject to anticipated substantial litigation. [19] An affected taxing unit is wholly or partly located in a county that has a population of less than 500,000 and is located on the Gulf of Mexico.[20] If completing this line, the taxing unit must include supporting documentation in Section 9.[21] Taxing units that are not affected, enter 0.	$ 0
22.	**Current year total taxable value.** Add Lines 18E and 19C, then subtract Lines 20 and 21.[22]	$ 5,831,825,303
23.	**Total current year taxable value of properties in territory annexed after Jan. 1, of the prior year.** Include both real and personal property. Enter the current year value of property in territory annexed. [23]	Attachment A $ 34,923,837
24.	**Total current year taxable value of new improvements and new personal property located in new improvements.** New means the item was not on the appraisal roll in the prior year. An improvement is a building, structure, fixture or fence erected on or affixed to land. New additions to existing improvements may be included if the appraised value can be determined. New personal property in a new improvement must have been brought into the taxing unit after Jan. 1, of the prior year and be located in a new improvement. New improvements **do** include property on which a tax abatement agreement has expired for the current year. [24]	Attachment D $ 305,582,650

[12] Tex. Tax Code §§26.012(6) and 26.04(c-2)
[13] Tex. Tax Code §26.03(c)
[14] Tex. Tax Code §26.03(e)
[15] Tex. Tax Code §26.01(c) and (d)
[16] Tex. Tax Code §26.01(c)
[17] Tex. Tax Code §26.01(d)
[18] Tex. Tax Code §26.012(6)(B)
[19] Tex. Tax Code §§26.012(6)(C) and 26.012(1-b)
[20] Tex. Tax Code §26.012(1-a)
[21] Tex. Tax Code §26.04(d-3)
[22] Tex. Tax Code §26.012(6)
[23] Tex. Tax Code §26.012(17)
[24] Tex. Tax Code §26.012(17)

Line	No-New-Revenue Tax Rate Worksheet	Amount/Rate
25.	**Total adjustments to the current year taxable value.** Add Lines 23 and 24.	$ 340,506,487
26.	**Adjusted current year taxable value.** Subtract Line 25 from Line 22.	$ 5,491,318,816
27.	**Current year NNR tax rate.** Divide Line 17 by Line 26 and multiply by $100. [25]	$ 0.397011 /$100
28.	**COUNTIES ONLY.** Add together the NNR tax rates for each type of tax the county levies. The total is the current year county NNR tax rate. [26]	$ 0.000000 /$100

Voter Approval Tax Rate

The voter-approval tax rate is the highest tax rate that a taxing unit may adopt without holding an election to seek voter approval of the tax rate. The type of taxing unit will determine the rate components that apply to a taxing units' overall voter-approval tax rate.

The voter-approval tax rate for a county is the sum of the voter-approval tax rates calculated for each type of tax the county levies. In most cases the voter-approval tax rate exceeds the no-new-revenue tax rate, but occasionally decreases in a taxing unit's debt service will cause the NNR tax rate to be higher than the voter-approval tax rate.

SECTION 2: Maintenance and Operations (M&O) and Debt Tax Rate Worksheet

This section calculates two components of the voter-approval tax rate:

1. **Maintenance and Operations (M&O) Tax Rate:** The M&O portion is the tax rate that is needed to raise the same amount of taxes that the taxing unit levied in the prior year plus the applicable percentage allowed by law. This rate accounts for such things as salaries, utilities and day-to-day operations.
2. **Debt Rate:** The debt rate includes the minimum dollar amount required to be paid toward debt service for the current year.[27] This rate accounts for principal and interest on bonds and other debt secured by property tax revenue.

Line	M&O and Debt Tax Rate Worksheet		Amount/Rate
29.	**Prior year M&O tax rate.** Enter the prior year M&O tax rate.		$ 0.252808 /$100
30.	**Prior year taxable value, adjusted for actual and potential court-ordered adjustments.** Enter the amount in Line 8 of the *No-New-Revenue Tax Rate Worksheet.*		$ 5,745,916,052
31.	**Total prior year M&O levy.** Multiply Line 29 by Line 30 and divide by $100.		$ 14,526,135
32.	**Adjusted prior year levy for calculating NNR M&O rate.**		
	A. **M&O taxes refunded for years preceding the prior tax year.** Enter the amount of M&O taxes refunded in the preceding year for taxes before that year. Types of refunds include court decisions, Tax Code Section 25.25(b) and (c) corrections and Tax Code Section 31.11 payment errors. Do not include refunds for tax year 2025. This line applies only to tax years preceding the prior tax year.	+ $ 73,721	Provided by assessor's office
	B. **Prior year taxes in TIF.** Enter the amount of taxes paid into the tax increment fund for a reinvestment zone as agreed by the taxing unit. If the taxing unit has no current year captured appraised value in Line 18D, enter 0.	– $ 348,480	Attachment B
	C. **Prior year transferred function.** If discontinuing all of a department, function or activity and transferring it to another taxing unit by written contract, enter the amount spent by the taxing unit discontinuing the function in the 12 months preceding the month of this calculation. If the taxing unit did not operate this function for this 12-month period, use the amount spent in the last full fiscal year in which the taxing unit operated the function. The taxing unit discontinuing the function will subtract this amount in D below. The taxing unit receiving the function will add this amount in D below. Other taxing units enter 0.	+/- $ 0	
	D. **Prior year M&O levy adjustments.** Subtract B from A. For taxing unit with C, subtract if discontinuing function and add if receiving function.	$ -274,759	
	E. Add Line 31 to 32D.		$ 14,251,376
33.	**Adjusted current year taxable value.** Enter the amount in Line 26 of the *No-New-Revenue Tax Rate Worksheet.*		$ 5,491,318,816
34.	**Current year NNR M&O rate (unadjusted).** Divide Line 32E by Line 33 and multiply by $100.		$ 0.259525 /$100

[25] Tex. Tax Code §26.04(c)
[26] Tex. Tax Code §26.04(d)
[27] Tex. Tax Code §26.012(3)

Line	M&O and Debt Tax Rate Worksheet		Amount/Rate
35.	**Rate adjustment for state criminal justice mandate.** [28]		
	A. Current year state criminal justice mandate. Enter the amount spent by a county in the previous 12 months providing for the maintenance and operation cost of keeping inmates in county-paid facilities after they have been sentenced. Do not include any state reimbursement received by the county for the same purpose.	$ 0	
	B. Prior year state criminal justice mandate. Enter the amount spent by a county in the 12 months prior to the previous 12 months providing for the maintenance and operation cost of keeping inmates in county-paid facilities after they have been sentenced. Do not include any state reimbursement received by the county for the same purpose. Enter zero if this is the first time the mandate applies.	– $ 0	
	C. Subtract B from A and divide by Line 33 and multiply by $100.	$ 0.000000 /$100	
	D. Enter the rate calculated in C. If not applicable, enter 0.		$ 0.000000 /$100
36.	**Rate adjustment for indigent health care expenditures.** [29]		
	A. Current year indigent health care expenditures. Enter the amount paid by a taxing unit providing for the maintenance and operation cost of providing indigent health care for the period beginning on July 1, of the prior tax year and ending on June 30, of the current tax year, less any state assistance received for the same purpose.	$ 0	
	B. Prior year indigent health care expenditures. Enter the amount paid by a taxing unit providing for the maintenance and operation cost of providing indigent health care for the period beginning on July 1, 2024 and ending on June 30, 2025, less any state assistance received for the same purpose.	– $ 0	
	C. Subtract B from A and divide by Line 33 and multiply by $100.	$ 0.000000 /$100	
	D. Enter the rate calculated in C. If not applicable, enter 0.		$ 0.000000 /$100
37.	**Rate adjustment for county indigent defense compensation.** [30]		
	A. Current year indigent defense compensation expenditures. Enter the amount paid by a county to provide appointed counsel for indigent individuals and fund the operations of a public defender's office under Article 26.044, Code of Criminal Procedure for the period beginning on July 1, of the prior tax year and ending on June 30,of the current tax year, less any state grants received by the county for the same purpose.	$ 0	
	B. Prior year indigent defense compensation expenditures. Enter the amount paid by a county to provide appointed counsel for indigent individuals and fund the operations of a public defender's office under Article 26.044, Code of Criminal Procedure for the period beginning on July 1, 2024 and ending on June 30, 2025, less any state grants received by the county for the same purpose.	$ 0	
	C. Subtract B from A and divide by Line 33 and multiply by $100.	$ 0.000000 /$100	
	D. Multiply B by 0.05 and divide by Line 33 and multiply by $100.	$ 0.000000 /$100	
	E. Enter the lesser of C and D. If not applicable, enter 0.		$ 0.000000 /$100
38.	**Rate adjustment for county hospital expenditures.** [31]		
	A. Current year eligible county hospital expenditures. Enter the amount paid by the county or municipality to maintain and operate an eligible county hospital for the period beginning on July 1, of the prior tax year and ending on June 30, of the current tax year.	$ 0	
	B. Prior year eligible county hospital expenditures. Enter the amount paid by the county or municipality to maintain and operate an eligible county hospital for the period beginning on July 1, 2024 and ending on June 30, 2025.	$ 0	
	C. Subtract B from A and divide by Line 33 and multiply by $100.	$ 0.000000 /$100	
	D. Multiply B by 0.08 and divide by Line 33 and multiply by $100.	$ 0.000000 /$100	
	E. Enter the lesser of C and D, if applicable. If not applicable, enter 0.		$ 0.000000 /$100

[28] Tex. Tax Code §26.044
[29] Tex. Tax Code §26.0441
[30] Tex. Tax Code §26.0442
[31] Tex. Tax Code §26.0443

Line	M&O and Debt Tax Rate Worksheet	Amount/Rate
39.	**Rate adjustment for defunding municipality.** This adjustment only applies to a municipality that is considered to be a defunding municipality for the current tax year under Chapter 109, Local Government Code. Chapter 109, Local Government Code only applies to municipalities with a population of more than 250,000 and includes a written determination by the Office of the Governor. See Tax Code Section 26.0444 for more information.	
	A. **Amount appropriated for public safety in the prior year.** Enter the amount of money appropriated for public safety in the budget adopted by the municipality for the preceding fiscal year. $ 0	
	B. **Expenditures for public safety in the prior year.** Enter the amount of money spent by the municipality for public safety during the preceding fiscal year $ 0	
	C. Subtract B from A and divide by Line 33 and multiply by $100 $ 0.000000 /$100	
	D. Enter the rate calculated in C. If not applicable, enter 0.	$ 0.000000 /$100
40.	**Adjusted current year NNR M&O rate.** Add Lines 34, 35D, 36D, 37E, and 38E. Subtract Line 39D.	$ 0.259525 /$100
41.	**Adjustment for prior year sales tax specifically to reduce property taxes.** Cities, counties and hospital districts that collected and spent additional sales tax on M&O expenses in the prior year should complete this line. These entities will deduct the sales tax gain rate for the current year in Section 3. Other taxing units, enter zero.	
	A. Enter the amount of additional sales tax collected and spent on M&O expenses in the prior year, if any. Counties must exclude any amount that was spent for economic development grants from the amount of sales tax spent $ 3,859,607 Attachment E	
	B. Divide Line 41A by Line 33 and multiply by $100 $ 0.070285 /$100	
	C. Add Line 41B to Line 40.	$ 0.329810 /$100
42.	**Current year voter-approval M&O rate.** Enter the rate as calculated by the appropriate scenario below. **Special Taxing Unit.** If the taxing unit qualifies as a special taxing unit, multiply Line 41C by 1.08. **- or -** **Other Taxing Unit.** If the taxing unit does not qualify as a special taxing unit, multiply Line 41C by 1.035.	$ 0.341353 /$100
D42.	***Disaster Line 42 (D42):* Current year voter-approval M&O rate for taxing unit affected by disaster declaration.** [32] If the taxing unit is located in an area declared a disaster area and at least one person is granted an exemption under Tax Code Section 11.35 for property located in the taxing unit, the governing body may direct the person calculating the voter-approval tax rate to calculate a rate equal to the lesser of:	
	A. The voter-approval tax rate calculated in the manner provided for a special taxing unit. Multiply line 41C by 1.08 [33] $ 0.356194 /$100	
	- or -	
	B. The voter-approval M&O tax rate calculated in the manner provided for a taxing unit other than a special taxing unit plus the disaster relief rate. [34] Complete Section 5 through Line 68 to complete D42(B).	
	a. Enter the **disaster relief cost.** $	
	b. **Disaster relief rate**. Divide Line D42(B)(a) by Line 26 and multiply by 100 $ /$100	
	c. Add Line D42(B)(b) to Line 42. $ /$100	
	d. Enter the **current year unused increment rate** from Line 68 $ /$100	
	e Add Line D42(c) to Line D42(d). $ /$100	
	The taxing unit shall continue to calculate the voter-approval tax rate in this manner until the earlier of: 1) the first year in which total taxable value on the certified appraisal roll exceeds the total taxable value of the tax year in which the disaster occurred; or 2) the third tax year after the tax year in which the disaster occurred.	
	C. Enter Line D42(A) if less than Line D42(B)(e). If Line D42(B)(e) is less than line D42(A), enter Line D42(B)(c). [35]	$ /$100
	If the taxing unit does not qualify, do not complete Disaster Line 42 (Line D42).	

[32] Tex. Tax Code §26.042
[33] Tex. Tax Code §26.042(a-2)(1)
[34] Tex. Tax Code §§26.042(a-1) and 26.042(a-2)(2)
[35] Tex. Tax Code §26.042(a-2)

Line	M&O and Debt Tax Rate Worksheet	Amount/Rate
43.	**Total current year debt to be paid with property taxes and additional sales tax revenue.** Debt means the interest and principal that will be paid on debts that: **(1)** are paid by property taxes; **(2)** are secured by property taxes; **(3)** are scheduled for payment over a period longer than one year; and **(4)** are not classified in the taxing unit's budget as M&O expenses. **A. Debt** also includes contractual payments to other taxing units that have incurred debts on behalf of this taxing unit, if those debts meet the four conditions above. Include only amounts that will be paid from property tax revenue. Do not include appraisal district budget payments. If the governing body of a taxing unit authorized or agreed to authorize a bond, warrant, certificate of obligation, or other evidence of indebtedness on or after Sept. 1, 2021, verify if it meets the amended definition of debt before including it here. [36] Enter debt amount ..... $ 8,762,499 **B.** Subtract **unencumbered fund amount** used to reduce total debt. ..... – $ 0 **C.** Subtract **certified amount spent from sales tax to reduce debt** (enter zero if none) ..... – $ 0 **D.** Subtract **amount paid** from other resources ..... – $ 1,957,910 **E. Adjusted debt.** Subtract B, C and D from A.	Attachment F Attachment G $ 6,804,589
44.	**Certified prior year excess debt collections.** Enter the amount certified by the collector. [37] Provided by assessor's office	$ 0
45.	**Adjusted current year debt.** Subtract Line 44 from Line 43E.	$ 6,804,589
46.	**Current year anticipated collection rate.** **A.** Enter the current year anticipated collection rate certified by the collector. [38] ..... 100.00 % **B.** Enter the prior year actual collection rate. ..... 99.08 % **C.** Enter the 2024 actual collection rate. ..... 100.17 % **D.** Enter the 2023 actual collection rate. ..... 99.64 % **E.** If the anticipated collection rate in A is lower than actual collection rates in B, C and D, enter the lowest collection rate from B, C and D. If the anticipated rate in A is higher than at least one of the rates in the prior three years, enter the rate from A. Note that the rate can be greater than 100%. [39]	Provided by assessor's office 100.00 %
47.	**Current year debt adjusted for collections.** Divide Line 45 by Line 46E.	$ 6,804,589
48.	**Current year total taxable value.** Enter the amount on Line 22 of the *No-New-Revenue Tax Rate Worksheet*.	$ 5,831,825,303
49.	**Current year debt rate.** Divide Line 47 by Line 48 and multiply by $100.	$ 0.116680 /$100
50.	**Current year voter-approval M&O rate plus current year debt rate.** Add Lines 42 and 49.	$ 0.458033 /$100
D50.	***Disaster Line 50 (D50):* Current year voter-approval M&O and debt tax rate for taxing unit affected by disaster declaration.** Complete this line if the taxing unit calculated the voter-approval M&O tax rate in the manner provided by Line D42. Add Line D42(C) and 49.	$ _____ /$100
51.	**COUNTIES ONLY.** Add together the voter-approval M&O and debt tax rates for each type of tax the county levies. The total is the current year county voter-approval M&O and debt tax rate.	$ 0.000000 /$100

[36] Tex. Tax Code §26.012(7)
[37] Tex. Tax Code §§26.012(10) and 26.04(b)
[38] Tex. Tax Code §26.04(b))
[39] Tex. Tax Code §26.04(h), (h-1) and (h-2)

SECTION 3: Adjustments for Additional Sales Tax to Reduce Property Taxes

Cities, counties and hospital districts may levy a sales tax specifically to reduce property taxes. Local voters by election must approve imposing or abolishing the additional sales tax. If approved, the taxing unit must reduce its NNR and voter-approval tax rates to offset the expected sales tax revenue.

This section should only be completed by a county, city or hospital district that is required to adjust its NNR tax rate and/or voter-approval tax rate because it adopted the additional sales tax.

Line	Additional Sales and Use Tax Worksheet	Amount/Rate
52.	**Taxable Sales.** For taxing units that adopted the sales tax in November of the prior tax year or May of the current tax year, enter the Comptroller's estimate of taxable sales for the previous four quarters.[40] Estimates of taxable sales may be obtained through the Comptroller's Allocation Historical Summary webpage. Taxing units that adopted the sales tax before November of the prior year, enter 0.	$ 0
53.	**Estimated sales tax revenue.** Counties exclude any amount that is or will be spent for economic development grants from the amount of estimated sales tax revenue. [41] **Taxing units that adopted the sales tax in November of the prior tax year or in May of the current tax year.** Multiply the amount on Line 52 by the sales tax rate (.01, .005 or .0025, as applicable) and multiply the result by .95. [42] **- or -** **Taxing units that adopted the sales tax before November of the prior year.** Enter the sales tax revenue for the previous four quarters. Do not multiply by .95.	Attachment E $ 3,677,101
54.	**Current year total taxable value.** Enter the amount from Line 22 of the *No-New-Revenue Tax Rate Worksheet*.	$ 5,831,825,303
55.	**Sales tax adjustment rate.** Divide Line 53 by Line 54 and multiply by $100.	$ 0.063052 /$100
56.	**Current year NNR tax rate, unadjusted for sales tax.**[43] Enter the rate from Line 27 or 28, as applicable, on the *No-New-Revenue Tax Rate Worksheet*.	$ 0.397011 /$100
57.	**Current year NNR tax rate, adjusted for sales tax.** **Taxing units that adopted the sales tax in November the prior tax year or in May of the current tax year.** Subtract Line 55 from Line 56. Skip to Line 58 if you adopted the additional sales tax before November of the prior tax year.	$ _____ /$100
58.	**Current year voter-approval tax rate, unadjusted for sales tax.**[44] Enter the rate from Line 50, Line D50 (disaster) or Line 51 (counties) as applicable, of the *M&O and Debt Tax Rate Worksheet*.	$ 0.458033 /$100
59.	**Current year voter-approval tax rate, adjusted for sales tax.** Subtract Line 55 from Line 58.	$ 0.394981 /$100

SECTION 4: Adjustment for Pollution Control

A taxing unit may raise its rate for M&O funds used to pay for a facility, device or method for the control of air, water or land pollution. This includes any land, structure, building, installation, excavation, machinery, equipment or device that is used, constructed, acquired or installed wholly or partly to meet or exceed pollution control requirements. The taxing unit's expenses are those necessary to meet the requirements of a permit issued by the Texas Commission on Environmental Quality (TCEQ). The taxing unit must provide the tax assessor with a copy of the TCEQ letter of determination that states the portion of the cost of the installation for pollution control.

This section should only be completed by a taxing unit that uses M&O funds to pay for a facility, device or method for the control of air, water or land pollution.

Line	Adjustment for Pollution Control Requirements Worksheet	Amount/Rate
60.	**Certified expenses from the Texas Commission on Environmental Quality (TCEQ).** Enter the amount certified in the determination letter from TCEQ. [45] The taxing unit shall provide its tax assessor-collector with a copy of the letter. [46]	$ _____
61.	**Current year total taxable value.** Enter the amount from Line 22 of the *No-New-Revenue Tax Rate Worksheet*.	$ _____
62.	**Additional rate for pollution control.** Divide Line 60 by Line 61 and multiply by $100.	$ _____ /$100
63.	**Current year voter-approval tax rate, adjusted for pollution control.** Add Line 62 to one of the following lines (as applicable): Line 50, Line D50 (disaster), Line 51 (counties) or Line 59 (taxing units with the additional sales tax).	$ _____ /$100

[40] Tex. Tax Code §26.041(d)
[41] Tex. Tax Code §26.041(i)
[42] Tex. Tax Code §26.041(d)
[43] Tex. Tax Code §26.04(c)
[44] Tex. Tax Code §26.04(c)
[45] Tex. Tax Code §26.045(d)
[46] Tex. Tax Code §26.045(i)

SECTION 5: Unused Increment Rate

The unused increment rate is the rate equal to the sum of the prior 3 years Foregone Revenue Amounts divided by the current taxable value. [47] The Foregone Revenue Amount for each year is equal to that year's adopted tax rate subtracted from that year's voter-approval tax rate adjusted to remove the unused increment rate multiplied by that year's current total value. [48]

The difference between the adopted tax rate and adjusted voter-approval tax rate is considered zero in the following scenarios:

- a tax year in which a taxing unit affected by a disaster declaration calculates the tax rate under Tax Code Section 26.042; [49]
- a tax year in which the municipality is a defunding municipality, as defined by Tax Code Section 26.0501(a); [50] or
- after Jan. 1, 2022, a tax year in which the comptroller determines that the county implemented a budget reduction or reallocation described by Local Government Code Section 120.002(a) without the required voter approval. [51]

This section should only be completed by a taxing unit that does not meet the definition of a special taxing unit. [52]

Line	Unused Increment Rate Worksheet	Amount/Rate
64.	**Year 3 Foregone Revenue Amount. Subtract the 2025 unused increment rate and 2025 actual tax rate from the 2025 voter-approval tax rate. Multiply the result by the 2025 current total value**	
	A. Voter-approval tax rate (Line 69)	$ 0.453750 /$100
	B. Unused increment rate (Line 68)	$ 0.053625 /$100
	C. Subtract B from A	$ 0.400125 /$100
	D. Adopted Tax Rate	$ 0.385928 /$100
	E. Subtract D from C	$ 0.014197 /$100
	F. 2025 Total Taxable Value (Line 61)	$ 5,750,425,601
	G. Multiply E by F and divide the results by $100. If the number is less than zero, enter zero.	$ 816,387
65.	**Year 2 Foregone Revenue Amount. Subtract the 2024 unused increment rate and 2024 actual tax rate from the 2024 voter-approval tax rate. Multiply the result by the 2024 current total value**	
	A. Voter-approval tax rate (Line 68)	$ 0.459347 /$100
	B. Unused increment rate (Line 67)	$ 0.037330 /$100
	C. Subtract B from A	$ 0.422017 /$100
	D. Adopted Tax Rate	$ 0.399553 /$100
	E. Subtract D from C	$ 0.022464 /$100
	F. 2024 Total Taxable Value (Line 60)	$ 5,157,113,262
	G. Multiply E by F and divide the results by $100. If the number is less than zero, enter zero.	$ 1,158,493
66.	**Year 1 Foregone Revenue Amount. Subtract the 2023 unused increment rate and 2023 actual tax rate from the 2023 voter-approval tax rate. Multiply the result by the 2023 current total value**	
	A. Voter-approval tax rate (Line 67)	$ 0.465251 /$100
	B. Unused increment rate (Line 66)	$ 0.056449 /$100
	C. Subtract B from A	$ 0.408802 /$100
	D. Adopted Tax Rate	$ 0.422114 /$100
	E. Subtract D from C	$ -0.013312 /$100
	F. 2023 Total Taxable Value (Line 60)	$ 4,566,054,581
	G. Multiply E by F and divide the results by $100. If the number is less than zero, enter zero.	$ 0
67.	**Total Foregone Revenue Amount.** Add Lines 64G, 65G and 66G	$ 1,974,880.000000
68.	**2026 Unused Increment Rate.** Divide Line 67 by Line 22 of the *No-New-Revenue Rate Worksheet*. Multiply the result by 100	$ 0.033863 /$100
69.	**Total 2026 voter-approval tax rate.** Add Line 68 to one of the following lines (as applicable): Line 50, Line D50 (only if Line D42(B) was used), Line 51 (counties), Line 59 (taxing units with additional sales tax) or Line 63 (taxing units with pollution)	$ 0.428517 /$100

[47] Tex. Tax Code §26.013(b)
[48] Tex. Tax Code §26.013(a)(1-a), (1-b), and (2)
[49] Tex. Tax Code §§26.04(c)(2)(A) and 26.042(a)
[50] Tex. Tax Code §26.0501(a) and (c)
[51] Tex. Local Gov't Code §120.007(d)
[52] Tex. Local Gov't Code §26.04(c)(2)(B)

SECTION 6: De Minimis Rate

The de minimis rate is the rate equal to the sum of the no-new-revenue maintenance and operations rate, the rate that will raise $500,000, and the current debt rate for a taxing unit. [53]

This section should only be completed by a taxing unit that is a municipality of less than 30,000 or a taxing unit that does not meet the definition of a special taxing unit. [54]

Line	De Minimis Rate Worksheet	Amount/Rate
70.	**Adjusted current year NNR M&O tax rate.** Enter the rate from Line 40 of the *M&O and Debt Tax Rate Worksheet.*	$ 0.259525 /$100
71.	**Current year total taxable value.** Enter the amount on Line 22 of the *No-New-Revenue Tax Rate Worksheet.*	$ 5,831,825,303
72.	**Rate necessary to impose $500,000 in taxes.** Divide $500,000 by Line 71 and multiply by $100.	$ 0.008573 /$100
73.	**Current year debt rate.** Enter the rate from Line 49 of the *M&O and Debt Tax Rate Worksheet.*	$ 0.116680 /$100
74.	**De minimis rate.** Add Lines 70, 72 and 73.	$ 0.384778 /$100

SECTION 7: Adjustment for Emergency Revenue Rate

In the tax year after the end of the disaster calculation time period detailed in Tax Code Section 26.042(a), a taxing unit that calculated its voter-approval tax rate in the manner provided for a special taxing unit due to a disaster must calculate its emergency revenue rate and reduce its voter-approval tax rate for that year. [55]

This section will apply to a taxing unit other than a special taxing unit that:

- directed the designated officer or employee to calculate the voter-approval tax rate of the taxing unit in the manner provided for a special taxing unit in the prior year; and
- the current year is the first tax year in which the total taxable value of property taxable by the taxing unit as shown on the appraisal roll for the taxing unit submitted by the assessor for the taxing unit to the governing body exceeds the total taxable value of property taxable by the taxing unit on January 1 of the tax year in which the disaster occurred or the disaster occurred four years ago.

Note: This section does not apply if a taxing unit is continuing to calculate its voter-approval tax rate in the manner provided for a special taxing unit because it is still within the disaster calculation time period detailed in Tax Code Section 26.042(a) because it has not met the conditions in Tax Code Section 26.042(a)(1) or (2).

Line	Emergency Revenue Rate Worksheet	Amount/Rate
75.	**2025 adopted tax rate.** Enter the rate in Line 4 of the *No-New-Revenue Tax Rate Worksheet.*	$ _____/$100
76.	**Adjusted 2025 voter-approval tax rate.** Use the taxing unit's Tax Rate Calculation Worksheets from the prior year(s) to complete this line. [56] If a disaster occurred in 2025 and the taxing unit calculated its 2025 voter-approval tax rate using a multiplier of 1.08 on Disaster Line 42 (D42) of the 2025 worksheet due to a disaster, complete the applicable sections or lines of *Form 50-856-a, Adjusted Voter-Approval Tax Rate for Taxing Units in Disaster Area Calculation Worksheet.* **- or -** If a disaster occurred prior to 2025 for which the taxing unit continued to calculate its voter-approval tax rate using a multiplier of 1.08 on Disaster Line 42 (D42) in 2025, complete form 50-856-a, *Adjusted Voter-Approval Tax Rate for Taxing Units in Disaster Area Calculation Worksheet* to recalculate the voter-approval tax rate the taxing unit would have calculated in 2025 if it had generated revenue based on an adopted tax rate using a multiplier of 1.035 in the years following the disaster. [57] Enter the final adjusted 2025 voter-approval tax rate from the worksheet.	$ _____/$100
77.	**Increase in 2025 tax rate due to disaster.** Subtract Line 76 from Line 75.	$ _____/$100
78.	**Adjusted 2025 taxable value.** Enter the amount in Line 14 of the *No-New-Revenue Tax Rate Worksheet.*	$ _____
79.	**Emergency revenue.** Multiply Line 77 by Line 78 and divide by $100.	$ _____
80.	**Adjusted current year taxable value.** Enter the amount in Line 26 of the *No-New-Revenue Tax Rate Worksheet.*	$ _____
81.	**Emergency revenue rate.** Divide Line 79 by Line 80 and multiply by $100. [58]	$ _____/$100
82.	**Current year voter-approval tax rate, adjusted for emergency revenue.** Subtract Line 81 from one of the following lines (as applicable): Line 50, Line D50 (disaster), Line 51 (counties), Line 59 (taxing units with the additional sales tax), Line 63 (taxing units with pollution control) or Line 69 (taxing units with the unused increment rate).	$ _____/$100

[53] Tex. Tax Code §26.012(8-a)
[54] Tex. Tax Code §26.063(a)(1)
[55] Tex. Tax Code §26.042(b)
[56] Tex. Tax Code §26.042(c)
[57] Tex. Tax Code §26.042(b)
[58] Tex. Tax Code §26.042(b)

SECTION 8: Total Tax Rate

Indicate the applicable total tax rates as calculated above.

No-new-revenue tax rate. ..... $ 0.397011 /$100
As applicable, enter the current year NNR tax rate from: Line 27, Line 28 (counties), or Line 57 (adjusted for sales tax).

Indicate the line number used: 27

Voter-approval tax rate ..... $ 0.428517 /$100
As applicable, enter the current year voter-approval tax rate from: Line 50, Line D50 (disaster), Line 51 (counties), Line 59 (adjusted for sales tax), Line 63 (adjusted for pollution control), Line 69 (adjusted for unused increment), or Line 82 (adjusted for emergency revenue).

Indicate the line number used: 69

De minimis rate. ..... $ 0.384778 /$100
If applicable, enter the current year de minimis rate from Line 74.

SECTION 9: Addendum

An affected taxing unit that enters an amount described by Tax Code Section 26.012(6)(C) in line 21 must include the following as an addendum:

1. Documentation that supports the exclusion of value under Tax Code Section 26.012(6)(C); and
2. Each statement submitted to the designated officer or employee by the property owner or entity as required by Tax Code Section 41.48(c)(2) for that tax year.

Insert hyperlinks to supporting documentation:

SECTION 10: Taxing Unit Representative Name and Signature

Enter the name of the person preparing the tax rate as authorized by the governing body of the taxing unit. By signing below, you certify that you are the designated officer or employee of the taxing unit and have accurately calculated the tax rates using values that are the same as the values shown in the taxing unit's certified appraisal roll or certified estimate of taxable value, in accordance with requirements in the Tax Code. [59]

print here ➧ Catherine Totty
Printed Name of Taxing Unit Representative

sign here ➧ Catherine Totty
Taxing Unit Representative

07/27/2026
Date

[59] Tex. Tax Code §26.04(c-2) and (d-2)

Chief Appraiser:

Alvin Lankford

Williamson Central Appraisal District



CERTIFICATION OF 2026 APPRAISED VALUES

A

I, Alvin Lankford, Chief Appraiser of the Williamson Central Appraisal District, hereby certify the 2026 value for the following jurisdiction:

Taxing Unit CHU - City of Hutto

Board of Directors
Chair: Jon Lux
Vice-Chair: Lora Webber
Secretary: Mason Moses
Board Member: Michael Wei
Board Member: Harry Gibbs
Board Member: Larry Gaddes
Board Member: Hope Hisle-Piper
Board Member: Lisa Birkman
Board Member: Michael Sanders

Taxable Value	Prior year Total Taxable value	$6,207,554,407	Line 1
	Prior year Tax Ceilings	$461,425,383	Line 2
	Current Year Tax Ceiling	$428,904,748	Line 20
	Preliminary Prior year adjusted taxable value	$5,746,129,024	
	Prior Year Total Adopted Tax Rate	0.3859280	Line 4
Prior year Taxable Value subject to an appeal under chapter 42 as of July 25	Prior Year ARB Certified Value	$85,987,112	Line 6A
	Prior Year ARB Disputed Value	$6,019,098	Line 6B
	Prior Year Undisputed Value	$79,968,014	
Prior year taxable value lost because property first qualified for an exemption in the current tax year.	Absolute Exemption	$0	Line 10A
	Partial Exemptions	$35,172,132	Line 10B
	Value Loss	$35,172,132	
Prior year taxable value lost because property first qualified for agricultural appraisal (1-d or 1-d-1), timber appraisal, recreational/scenic appraisal or public access airport special appraisal in the currrent year.	Prior Year Market Value	$0	Line 11A
	Current Year Productivity or special appraisal value	$0	Line 11B
	Value Loss	$0	
Total current taxable value on the certified appraisal roll today.	Current Year Certified Values	$6,343,049,563	Line 18A
	Taxpayers Estimate of Value (under protest)	$101,770,409	Line 19A
Total previous year taxable value of properties in territory annexed after January.1, of the prior year.		$34,923,837	Line 23
	Original Prior Year ARB Values	$86,454,879	Line 5A
Previous year taxable values lost because court appeals of ARB decisions reduced the prior years's taxable value (As of 7/12/2026)	Prior Year Values Resulting from Final Court Decisions	$80,648,753	Line 5B
	Prior year Value Loss	$5,806,126	

Current Year Total Appraised value of new improvements	$426,382,178
Current Year Total taxable value of new improvements	$418,331,170

Printed on 7/18/2025 by Chief Appraiser



B

QuickRefID	TaxingUnitList	TaxingUnitCode	FeeCode	ChargeAmount	PaymentAmount	BalanceAmount	TaxingUnitCode	AssessedValue	TaxableValue
R021442	CHU,F00,GWI,RFM,SHU,W09,J02,T14,P09	CHU	MO	$1,190.89	$1,190.89	$0.00	T14	471,065	471,065
R460519	CHU,F00,GWI,RFM,SHU,W09,J02,T14,P09	CHU	MO	$7,313.60	$7,313.60	$0.00	T14	2,892,947	2,892,947
R543553	CHU,F00,GWI,RFM,SHU,W09,J02,T14	CHU	MO	$42.72	$42.72	$0.00	T14	16,900	16,900
R571095	CHU,F00,GWI,RFM,SHU,W09,J02,T14,P09	CHU	MO	$922.71	$922.71	$0.00	T14	364,983	364,983
R577611	CHU,F00,GWI,RFM,SHU,W09,J02,T14,P09	CHU	MO	$2,918.00	$2,918.00	$0.00	T14	1,154,235	1,154,235
R577612	CHU,F00,GWI,RFM,SHU,W09,J02,T14	CHU	MO	$15.38	$15.38	$0.00	T14	6,084	6,084
R590418	CHU,F00,GWI,RFM,SHU,W09,J02,T14,P09	CHU	MO	$4,003.22	$4,003.22	$0.00	T14	1,583,504	1,583,504
R590419	CHU,F00,GWI,RFM,SHU,W09,J02,T14,P09	CHU	MO	$9.61	$9.61	$0.00	T14	3,800	3,800
R590425	CHU,F00,GWI,RFM,SHU,W09,J02,T14,P09	CHU	MO	$0.08	$0.08	$0.00	T14	30	30
R590426	CHU,F00,GWI,RFM,SHU,W09,J02,T14,P09	CHU	MO	$5.81	$5.81	$0.00	T14	2,300	2,300
R606393	CHU,F00,GWI,RFM,SHU,W09,J02,T14,P09	CHU	MO	$4,739.64	$4,739.64	$0.00	T14	1,874,800	1,874,800
R606394	CHU,F00,GWI,RFM,SHU,W09,J02,T14,P09	CHU	MO	$14,915.67	$14,915.67	$0.00	T14	5,900,000	5,900,000
R606395	CHU,F00,GWI,RFM,SHU,W09,J02,T14,P09	CHU	MO	$392.34	$392.34	$0.00	T14	155,194	155,194
R658917	CHU,F00,GWI,RFM,SHU,W09,J02,T14,P09	CHU	MO	$2,128.85	$2,128.85	$0.00	T14	842,080	842,080
R658918	CHU,F00,GWI,RFM,SHU,W09,J02,T14,P09	CHU	MO	$38.09	$38.09	$0.00	T14	15,068	15,068
R658919	CHU,F00,GWI,RFM,SHU,W09,J02,T14,P09	CHU	MO	$5,593.79	$5,593.79	$0.00	T14	2,212,663	2,212,663
R658920	CHU,F00,GWI,RFM,SHU,W09,J02,T14,P09	CHU	MO	$28.70	$28.70	$0.00	T14	11,354	11,354
R658921	CHU,F00,GWI,RFM,SHU,W09,J02,T14,P09	CHU	MO	$1,366.16	$1,366.16	$0.00	T14	540,393	540,393
R659932	CHU,F00,GWI,RFM,SHU,W09,J02,T14,P09	CHU	MO	$309.75	$309.75	$0.00	T14	122,524	122,524
R659933	CHU,F00,GWI,RFM,SHU,W09,J02,T14,P09	CHU	MO	$72.69	$72.69	$0.00	T14	28,754	28,754
R659934	CHU,F00,GWI,RFM,SHU,W09,J02,T14,P09	CHU	MO	$554.82	$554.82	$0.00	T14	219,462	219,462
R659935	CHU,F00,GWI,RFM,SHU,W09,J02,T14,P09	CHU	MO	$3,371.32	$3,371.32	$0.00	T14	1,333,549	1,333,549
R659936	CHU,F00,GWI,RFM,SHU,W09,J02,T14,P09	CHU	MO	$30,242.76	$30,242.76	$0.00	T14	11,962,739	11,962,739
R659937	CHU,F00,GWI,RFM,SHU,W09,J02,T14,P09	CHU	MO	$317.14	$317.14	$0.00	T14	125,448	125,448
R659938	CHU,F00,GWI,RFM,SHU,W09,J02,T14,P09	CHU	MO	$21,242.00	$21,242.00	$0.00	T14	8,402,422	8,402,422
R659939	CHU,F00,GWI,RFM,SHU,W09,J02,T14,P09	CHU	MO	$2,137.28	$2,137.28	$0.00	T14	845,416	845,416
R659940	CHU,F00,GWI,RFM,SHU,W09,J02,T14,P09	CHU	MO	$618.67	$618.67	$0.00	T14	244,720	244,720
								Taxable Value TIRZ 1	**41,332,434**
								Less Base Value	**(1,256,087)**
									40,076,347
								60% to TIRZ	**24,045,808**
R020270	CHU,F00,GWI,RFM,SHU,J02,W13,T25	CHU	MO	$0.00	$0.00	$0.00	T25	0	0
R020271	CHU,F00,GWI,RFM,SHU,J02,W13,T25	CHU	MO	$0.00	$0.00	$0.00	T25	0	0
R300258	CHU,F00,GWI,RFM,SHU,J02,W13,T25	CHU	MO	$0.00	$0.00	$0.00	T25	0	0
R331409	CHU,F00,GWI,RFM,SHU,J02,W13,T25	CHU	MO	$0.00	$0.00	$0.00	T25	0	0
R362998	CHU,F00,GWI,RFM,SHU,J02,W13,T25	CHU	MO	$0.00	$0.00	$0.00	T25	0	0
R391646	CHU,F00,GWI,RFM,SHU,J02,W13,T25	CHU	MO	$0.00	$0.00	$0.00	T25	0	0
R395170	CHU,F00,GWI,RFM,SHU,J02,W13,T25	CHU	MO	$0.00	$0.00	$0.00	T25	0	0
R463947	CHU,F00,GWI,RFM,SHU,J02,W13,T25	CHU	MO	$1.37	$1.37	$0.00	T25	541	541
R494554	CHU,F00,GWI,RFM,SHU,J02,W13,T25	CHU	MO	$0.00	$0.00	$0.00	T25	0	0
R494683	CHU,F00,GWI,RFM,SHU,J02,W13,T25	CHU	MO	$0.00	$0.00	$0.00	T25	0	0
R647610	CHU,F00,GWI,RFM,SHU,J02,W13,T25	CHU	MO	$714.05	$714.05	$0.00	T25	282,448	282,448
R647611	CHU,F00,GWI,RFM,SHU,J02,W13,T25	CHU	MO	$57,684.80	$57,684.80	$0.00	T25	22,817,632	22,817,632
								Taxable Value TIRZ 2	**23,100,621**
								Less Base Value	**(548,363.00)**
									22,552,258
								50% to TIRZ	**11,276,129**
R020915	CHU,F00,GWI,RFM,SHU,J02,W13,T23	CHU	MO	$55.37	$55.37	$0.00	T23	21,903	21,903
R020916	CHU,F00,GWI,RFM,SHU,J02,W13,T23	CHU	MO	$44.11	$44.11	$0.00	T23	17,447	17,447
R020939	CHU,F00,GWI,RFM,SHU,J02,W13,T23	CHU	MO	$0.00	$0.00	$0.00	T23	0	0
R020941	CHU,F00,GWI,RFM,SHU,J02,W13,T23	CHU	MO	$133.43	$133.43	$0.00	T23	52,780	52,780
R020943	CHU,F00,GWI,RFM,SHU,J02,W13,T23	CHU	MO	$0.00	$0.00	$0.00	T23	0	0
R020945	CHU,F00,GWI,RFM,SHU,J02,W13,T23	CHU	MO	$0.00	$0.00	$0.00	T23	0	0
R330329	CHU,F00,GWI,RFM,SHU,J02,W13,T23	CHU	MO	$8.13	$8.13	$0.00	T23	3,217	3,217
R345747	CHU,F00,GWI,RFM,SHU,J02,W13,T23	CHU	MO	$0.00	$0.00	$0.00	T23	0	0
R345751	CHU,F00,GWI,RFM,SHU,J02,W13,T23	CHU	MO	$0.00	$0.00	$0.00	T23	0	0
R345752	CHU,F00,GWI,RFM,SHU,J02,W13,T23	CHU	MO	$0.00	$0.00	$0.00	T23	0	0
R498062	CHU,F00,GWI,RFM,SHU,J02,W13,T23	CHU	MO	$0.00	$0.00	$0.00	T23	0	0
R498070	CHU,F00,GWI,RFM,SHU,J02,W13,T23	CHU	MO	$0.00	$0.00	$0.00	T23	0	0
R498071	CHU,F00,GWI,RFM,SHU,J02,W13,T23	CHU	MO	$0.00	$0.00	$0.00	T23	0	0
R635646	CHU,F00,GWI,RFM,SHU,J02,W13,T23	CHU	MO	$3,371.51	$3,371.51	$0.00	T23	1,333,623	1,333,623
R659620	CHU,F00,GWI,RFM,SHU,J02,W13,T23	CHU	MO	$157,353.26	$157,353.26	$0.00	T23	62,242,198	62,242,198
R659621	CHU,F00,GWI,RFM,SHU,J02,W13,T23	CHU	MO	$3,404.66	$3,404.66	$0.00	T23	1,346,736	1,346,736
R659622	CHU,F00,GWI,RFM,SHU,J02,W13,T23	CHU	MO	$627.33	$627.33	$0.00	T23	248,146	248,146
R659623	CHU,F00,GWI,RFM,SHU,J02,W13,T23	CHU	MO	$4,399.02	$4,399.02	$0.00	T23	1,740,062	1,740,062
R661685	CHU,F00,GWI,RFM,SHU,J02,W13,T23	CHU	MO	$71,954.01	$71,954.01	$0.00	T23	28,461,919	28,461,919
R661687	CHU,F00,GWI,RFM,SHU,J02,W13,T23	CHU	MO	$39,180.83	$39,180.83	$0.00	T23	15,498,257	15,498,257
R664418	CHU,F00,GWI,RFM,SHU,J02,W13,T23	CHU	MO	$1,562.58	$1,562.58	$0.00	T23	618,090	618,090
								Taxable Value TIRZ 3	**111,584,378**
								Less Base Value	-1,634,874
									109,949,504
								50% to TIRZ	**54,974,752**

Line13 **Total to TIRZ** **90,296,689**

Taxable Value in TIRZ: $90,296,689
Divided by 100 **$902,966**
Line 32B *** .385928 =** **$348,480**

Chief Appraiser:

Alvin Lankford

Williamson Central Appraisal District

CERTIFICATION OF 2026 APPRAISED VALUES

I, Alvin Lankford, Chief Appraiser of the Williamson Central Appraisal District, hereby certify the 2026 value for the following jurisdiction:

C

Taxing Unit T14 - TIFF #1 CITY OF HUTTO

Board of Directors
Chair: Jon Lux
Vice-Chair: Lora Webber
Secretary: Mason Moses
Board Member: Michael Wei
Board Member: Harry Gibbs
Board Member: Larry Gaddes
Board Member: Hope Hisle-Piper
Board Member: Lisa Birkman
Board Member: Michael Sanders

Taxable Value	Prior year Total Taxable value	$42,135,076
	Prior year Tax Ceilings	$0
	Current Year Tax Ceiling	$0
	Preliminary Prior year adjusted taxable value	$42,135,076
	Prior Year Total Adopted Tax Rate	
Prior year Taxable Value subject to an appeal under chapter 42 as of July 25	Prior Year ARB Certified Value	$10,592,155
	Prior Year ARB Disputed Value	$741,451
	Prior Year Undisputed Value	$9,850,704
Prior year taxable value lost because property first qualified for an exemption in the current tax year.	Absolute Exemption	$0
	Partial Exemptions	$435,185
	Value Loss	$435,185
Prior year taxable value lost because property first qualified for agricultural appraisal (1-d or 1-d-1), timber appraisal, recreational/scenic appraisal or public access airport special appraisal in the currrent year.	Prior Year Market Value	$0
	Current Year Productivity or special appraisal value	$0
	Value Loss	$0
Total current taxable value on the certified appraisal roll today.	Current Year Certified Values	$43,703,249
	Taxpayers Estimate of Value (under protest)	$1,786,086
Total previous year taxable value of properties in territory annexed after January.1, of the prior year.		$0
	Original Prior Year ARB Values	$6,468,143
Previous year taxable values lost because court appeals of ARB decisions reduced the prior years's taxable value (As of 7/12/2026)	Prior Year Values Resulting from Final Court Decisions	$5,900,000
	Prior year Value Loss	$568,143
	Current Year Total Appraised value of new improvements	$5,318,573
	Current Year Total taxable value of new improvements	$5,318,573

$43,703,249 Certified Value
(1,256,087) Less Base Value
42,447,162
x 60% TIRZ Contribution
$25,468,297

Printed on 7/18/2025 by Chief Appraiser

Chief Appraiser:

Alvin Lankford

Williamson Central Appraisal District

CERTIFICATION OF 2026 APPRAISED VALUES

C

I, Alvin Lankford, Chief Appraiser of the Williamson Central Appraisal District, hereby certify the 2026 value for the following jurisdiction:

Taxing Unit T25 - Hutto TIRZ # 2

Board of Directors
Chair: Jon Lux
Vice-Chair: Lora Webber
Secretary: Mason Moses
Board Member: Michael Wei
Board Member: Harry Gibbs
Board Member: Larry Gaddes
Board Member: Hope Hisle-Piper
Board Member: Lisa Birkman
Board Member: Michael Sanders

Taxable Value	Prior year Total Taxable value	$24,890,466
	Prior year Tax Ceilings	$0
	Current Year Tax Ceiling	$0
	Preliminary Prior year adjusted taxable value	$24,890,466
	Prior Year Total Adopted Tax Rate	0.0000000
Prior year Taxable Value subject to an appeal under chapter 42 as of July 25	Prior Year ARB Certified Value	$0
	Prior Year ARB Disputed Value	$0
	Prior Year Undisputed Value	$0
Prior year taxable value lost because property first qualified for an exemption in the current tax year.	Absolute Exemption	$0
	Partial Exemptions	$0
	Value Loss	$0
Prior year taxable value lost because property first qualified for agricultural appraisal (1-d or 1-d-1), timber appraisal, recreational/scenic appraisal or public access airport special appraisal in the currrent year.	Prior Year Market Value	$0
	Current Year Productivity or special appraisal value	$0
	Value Loss	$0
Total current taxable value on the certified appraisal roll today.	Current Year Certified Values	$55,759,398
	Taxpayers Estimate of Value (under protest)	$27,163
Total previous year taxable value of properties in territory annexed after January.1, of the prior year.		$0
	Original Prior Year ARB Values	$0
Previous year taxable values lost because court appeals of ARB decisions reduced the prior years's taxable value (As of 7/12/2026)	Prior Year Values Resulting from Final Court Decisions	$0
	Prior year Value Loss	$0
Current Year Total Appraised value of new improvements		$34,007,488
Current Year Total taxable value of new improvements		$34,007,488

$55,759,398 Certified Value
($548,363) Less Base Value
55,211,035
x 50%
$27,605,518

Printed on 7/18/2025 by Chief Appraiser

Chief Appraiser:

Alvin Lankford

Williamson Central Appraisal District

CERTIFICATION OF 2026 APPRAISED VALUES

I, Alvin Lankford, Chief Appraiser of the Williamson Central Appraisal District, hereby certify the 2026 value for the following jurisdiction:

C

Taxing Unit T23 - Hutto Megasite TIF # 3

Board of Directors
Chair: Jon Lux
Vice-Chair: Lora Webber
Secretary: Mason Moses
Board Member: Michael Wei
Board Member: Harry Gibbs
Board Member: Larry Gaddes
Board Member: Hope Hisle-Piper
Board Member: Lisa Birkman
Board Member: Michael Sanders

Taxable Value	Prior year Total Taxable value	$112,988,775
	Prior year Tax Ceilings	$0
	Current Year Tax Ceiling	$0
	Preliminary Prior year adjusted taxable value	$112,988,775
	Prior Year Total Adopted Tax Rate	0.0000000
Prior year Taxable Value subject to an appeal under chapter 42 as of July 25	Prior Year ARB Certified Value	$0
	Prior Year ARB Disputed Value	$0
	Prior Year Undisputed Value	$0
Prior year taxable value lost because property first qualified for an exemption in the current tax year.	Absolute Exemption	$0
	Partial Exemptions	$0
	Value Loss	$0
Prior year taxable value lost because property first qualified for agricultural appraisal (1-d or 1-d-1), timber appraisal, recreational/scenic appraisal or public access airport special appraisal in the currrent year.	Prior Year Market Value	$0
	Current Year Productivity or special appraisal value	$0
	Value Loss	$0
Total current taxable value on the certified appraisal roll today.	Current Year Certified Values	$263,667,086
	Taxpayers Estimate of Value (under protest)	$2,028,131
Total previous year taxable value of properties in territory annexed after January.1, of the prior year.		$0
	Original Prior Year ARB Values	$0
Previous year taxable values lost because court appeals of ARB decisions reduced the prior years's taxable value (As of 7/12/2026)	Prior Year Values Resulting from Final Court Decisions	$0
	Prior year Value Loss	$0
	Current Year Total Appraised value of new improvements	$73,422,459
	Current Year Total taxable value of new improvements	$73,422,459

$263,667,086 Certified Values
(1,634,874) Less Base Value
$262,032,212
x 50%
$131,016,106

Printed on 7/18/2025 by Chief Appraiser

D

625 F.M. 1460
Georgetown, Texas 78626

(512) 930-3787

www.wcad.org

Board of Directors

Jon Lux, Chair

Lora H. Weber, Vice Chair

Mason Moses, Secretary

Lisa Birkman

Harry Gibbs

Michael Wei

Catherine Totty

Hope Hisle-Piper

Mike Sanders

Chief Appraiser

Alvin Lankford
(512) 930-3787

We will provide quality service with the highest standards of professionalism, integrity and respect. We will uphold these standards while providing an accurate, fair and cost-effective appraisal roll in compliance with the laws of the State of Texas."

7/23/2026

T14 - TIFF #1 CITY OF HUTTO

Certified Supplement

For captured appraised value of new improvements in tax reinvestment zones:

(26.03(c)) The portion of the captured appraised value of real property taxable by a taxing unit that corresponds to the portion of the tax increment of the unit from that property that the unit has agreed to pay into the tax increment fund for a reinvestment zone and that is not included in the calculation of the 'new property value' as defined by section 26.012 is excluded from the value of property taxable by the unit in any tax rate calculation under this chapter.

The new improvement value for T14 - TIFF #1 CITY OF HUTTO is $5,318,573.

The New Improvement value in City of Hutto that does not include the new improvement value in a TIRZ is $305,582,650.

Sincerely,

Alvin Lankford, RPA, CCA, CAE, AAS

E

	Gross Sales Tax Collections (Including EDC Share)				
	2022	**2023**	**2024**	**2025**	**2026**
July - September	2,515,700.41	2,954,773.48	3,359,703.60	3,597,792.64	3,795,664.53
October - December	2,749,776.33	2,971,450.33	3,253,200.20	3,575,675.57	3,682,499.90
January - March		2,979,112.98	3,358,707.96	3,734,748.98	3,611,097.73
April - June	5,026,840.73	3,365,093.07	3,344,866.70	4,225,514.72	3,619,140.48
	10,292,317.47	12,270,429.86	13,316,478.46	15,133,731.91	14,708,402.64
			13,416,478.44		
	0.2500	0.2500	0.2500	0.2500	0.2500
line 53	2,573,079.37	3,067,607.47	3,354,119.61	3,783,432.98	3,677,100.66
January - September			2,658,396.33	2,575,342.00	2,938,982.20
October - December			542,261.00	893,919.00	920,624.98
line 41a			3,200,657.33	3,469,261.00	3,859,607.18

F

2013 CO Principal	115,150
2013 CO Interest	46,283
2013 Refunding Principal	279,650
2013 Refunding Interest	21,450
2015 LTN Refunding Principal	81,900
2015 LTN Refunding Interest	20,300
2016 GO Principal	375,000
2016 GO Interest	90,600
2017 CO Principal	410,000
2017 CO Interest	350,500
2019A GO Principal	520,000
2019A GO Interest	553,200
2019B GO Principal	305,000
2019B GO Interest	314,100
2020A GO Refunding Principal	180,000
2020A GO Refunding Interest	27,200
2020B GO Refunding Principal	280,000
2020B GO Refunding Interest	98,900
2022 GO Principal	640,000
2022 GO Interest	1,005,200
2023 GO Principal	200,000
2023 GO Interest	515,200
2023A GO Principal	280,000
2023A GO Interest	513,794
Series 2024 CO's ($9.2) - principal	-
Series 2024 CO's ($9.2) - interest	424,656
Series 2024 GO's ($15.9) - principal	
Series 2024 GO's ($15.9) - interest	745,250
Series 2026 GO's ($5.0) - principal	50,000
Series 2026 GO's ($5.0) - interest	319,166
Subtotal	8,762,499

G

City of Hutto
Summary of Transfers into Debt Service Fund
FY 2027

Transfer from Fund 31 - Capital Projects	140,746.00
Transfer from Fund 32 - Capital Projects	330,714.00
Transfer from Fund 33 - Capital Projects	175,000.00
Transfer from EDC	515,200.00
Transfer from TIRZ 3	246,250.00
From Fund Balance	550,000.00
	1,957,910.00

AGENDA ITEM REPORT
10.1.

To:	City Council
Subject:	Consideration and possible action on Resolution No. R-2026-174 approving supplemental No. 1 in the amount of $111,512 with Freese and Nichols, Inc., related to civil engineering design services for the CR 132 Widening Project, primarily for the preparation of the preliminary geometric layout and plans, specifications and estimates (PS&E) (CIP T41-2025). (Kate Moriarty)
Meeting:	Thursday, September 3, 2026
Department:	Engineering /
Staff Contact:	Kate Moriarty

ITEM SUMMARY:

Background Information:

On November 7, 2024 City Council approved a Master Services agreement with Freese and Nichols as a Transportation and Drainage Engineering Rotation List consultant.

Supplemental Request No. 1
Additional design work will consist primarily of the preparation of a Preliminary Geometric Layout and Plans, Specifications, and Estimate ("PS&E").

- Project Administrative Services
- Project Coordination Services
- Roadway Design Controls: The Engineer will issue an additional 100% submittal that will complete detailing required for construction. The initial 100% submittal included all required sheets but without complete detailing,
  since the number of sheets accounted for in the original scope approximately doubled due to an increase in complexity of the cross-street design and design at the project tie-ins not accounted for in the original scope, including:
  o Removal: scoped = 3, actual = 7
  o Roadway P&P: scoped = 6, actual = 13
  o Cross-Sections: scoped = 30, actual = 55
- Drainage Design Services: The original scope of services assumed analysis and design of one detention pond on the southern end of the project. During the course of design, FNI determined that proposing a detention pond for the intended outfall was infeasible due to topographic constraints and detention would also be needed at 3 other outfalls on the project. FNI's plans will instead reflect in-line detention at 4 storm sewer/culvert outfalls.
  - The Engineer will prepare detention sizing and design for three (3) additional outfalls not identified during original scoping.

- Traffic Control Plan Design Services: The original scope assumed a simple traffic control design since this is a greenfield project. Although this assumption has proven accurate for most of the project, the traffic control design at the tie-ins and temporary drainage design proved much more complex than originally assumed.
    - The Engineer will issue an additional 100% submittal that will complete the detailing required for construction. The initial 100% submittal included all required sheets but without complete detailing, since the number of phases increased from two (2) phases accounted for with the original scope to eight (8) phases, increasing the number of sheets, including:
      o Typical Sections: scoped = 2, actual = 14
      o TCP Layout Sheets: scoped = 8, actual = 37
      o Detour Sheets: scoped = 2, actual = 5
- Irrigation Design Services: The engineer will remove irrigation design from the 100% submittal
- Illumination Design Services:
    - The Engineer will update the illumination design to meet TxDOT standards and include all construction details and calculations needed for illumination items to be constructed entirely by the Contractor and not by Others.
    - The Engineer will perform Voltage Drop Calculations.
- Supplemental Plans, Specifications and Estimate Documents: The more complex roadway and traffic control plans increased the complexity in preparing supplemental supporting documents.
- The Engineer will issue an additional 100% submittal that will complete the detailing required for construction. This will include revisions to:
  o Opinion of Probable Construction Cost (OPCC)
  o Contract Time Determination (CTD) schedule utilizing the Critical path Method (CPM) in Microsoft Project or Excel.
  o Project Manual, including standard general provisions, instructions to bidders, bid forms, applicable prevailing wage rates, standard and special specifications, special provisions, general notes, and any other information required for complete construction of the Project.
    - The Engineer will revise the originally prepared Project Manual to be appropriate for a Competitive Seal Proposal (CSP) procurement.

STAFF RECOMMENDATION:

Based on review of increased design complexity, expanded technical requirements, and the need for complete construction-level documentation, the Supplemental Request No. 1 is needed for for project design completion. Approval ensures final plans, specifications, and estimate documents meet engineering standards, reduce construction risk, and align with City policies and strategic goals. Staff recommends approval of Supplemental Request No. 1 with Freese and Nichols, Inc. (FNI) for additional design services required to complete the Preliminary Geometric Layout and the Plans, Specifications, and Estimate (PS&E) for the CR 132 Widening Project (CIP T41-2025).

AGENDA ITEM REPORT
10.1.

FISCAL NOTES:

Funding is available from the Series 2024 Certificate of Obligation as follows:

Series 2024 CO (31)
Account Number: 31-040-060-6739
Account Name: T41 CR 132 Widening between Limmer & CR 133
Amended Budget: $209,083
Requested Amount: $111,512
Amount Remaining: $97,571

ATTACHMENTS:

1. T41_2025_CR_132_Realignment_between_CR_132_and_CR_133_map
2. 2026.08.12 Hutto RES CR 132 Widening FNI
3. CR 132 Realignment Amendment 1_Partially Executed
4. COI-City of Hutto-10.23.2026-CR 132 Realignment Project Number T41-2025
5. 1295 Certificate 101581130-CR 132 Realignment-08.10.2026_Redacted

T41-2025 CR 132 Realignment between CR 132 and CR 133

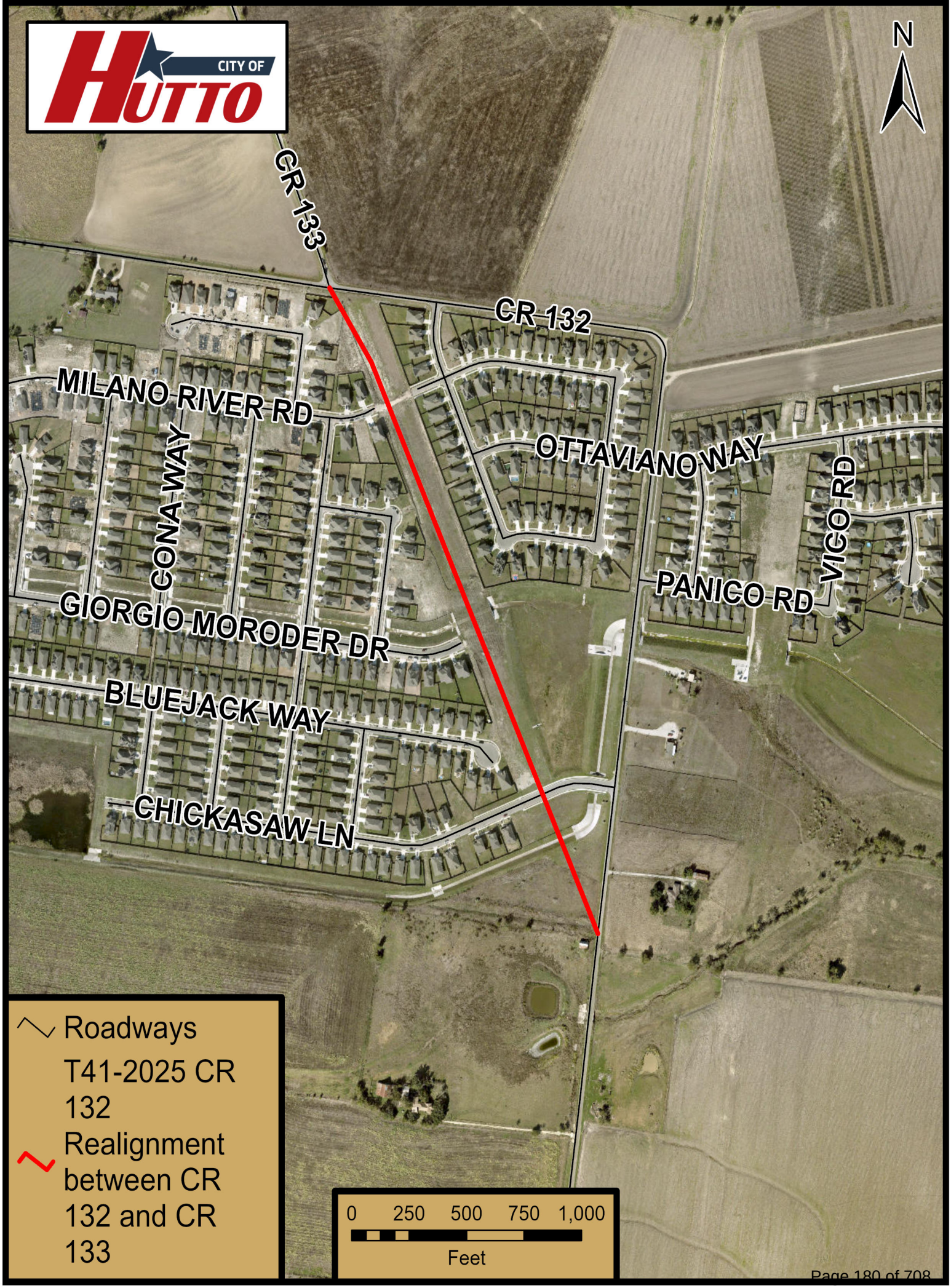

RESOLUTION NO. R-2026-###

A RESOLUTION OF THE CITY OF HUTTO, TEXAS, APPROVING SUPPLEMENTAL REQUEST NO. 1 WITH FREESE & NICHOLS, INC., IN THE AMOUNT OF $111,512.00 FOR ENGINEERING DESIGN SERVICES IN THE CR 132 WIDENING PROJECT (T41-2025); AUTHORIZING THE CITY MANAGER TO EXECUTE REQUEST NO. 1; PROVIDING PROPER NOTICE & MEETING; AND PROVIDING AN EFFECTIVE DATE.

WHEREAS, the City Council desires to approve change Supplemental Order Request No. 1, between the City of Hutto and Freese & Nichols Inc., in the amount of $111,512.00 for the engineering design services for the CR 132 widening project; and

WHEREAS, the City Council desires to authorize the City Manager to execute Supplemental Order No.1, attached as Exhibit A.

NOW, THEREFORE, BE IT RESOLVED BY THE CITY COUNCIL OF THE CITY OF HUTTO, TEXAS, THAT:

SECTION 1: The findings set forth in the recitals of this Resolution are hereby found to be true and correct and are hereby adopted as findings of the City Council and are incorporated into the body of this Resolution as if fully set forth herein.

SECTION 2: That the Hutto City Council hereby approves and authorizes the City Manager to execute Supplemental Order No. 1 with Freese & Nichols Inc., with Exhibit A**,** a copy of the same being attached hereto and incorporated herein for all purposes.

SECTION 3: The City Council hereby finds and declares that written notice of the date, hour, place and subject of the meeting at which this Resolution was adopted was posted and that such meeting was open to the public as required by law at all times during which this Resolution and the subject matter hereof were discussed, considered and formally acted upon, all as required by the Open Meetings Act, Chapter 551, Texas Government Code, as amended.

SECTION 4: This Resolution shall take effect immediately upon its passage.

PASSED AND APPROVED by the CITY COUNCIL of the CITY OF HUTTO, on the 20th day of August, 2026, on a vote of ____ AYES; _____ NAYS; and _____

ABSTENTIONS.

CITY OF HUTTO, TEXAS:

_____
Mike Snyder, Mayor

ATTEST:

_____
Laura Hallmark, City Secretary

PROFESSIONAL SERVICES AGREEMENT

STATE OF TEXAS

COUNTY OF WILLIAMSON

CITY OF HUTTO

INDIVIDUAL PROJECT ORDER FOR THE DESIGN

SERVICES OF CR 132 Realignment PROJECT

(PROJECT NUMBER T41-2025)

This Agreement is made and entered into in Hutto, Williamson County, Texas, between City of Hutto, a Municipal Corporation in the State of Texas (hereafter referred to as "City") and

FREESE AND NICHOLS, INC.

(hereafter referred to as "Consultant"), said Agreement being executed by City pursuant to City Charter, Ordinances and Resolutions of the Hutto City Council, and by Consultant for **CIVIL ENGINEERING DESIGN SERVICES** set forth herein in connection with the above designated Project for City.

ARTICLE I DEFINITIONS;
INTERPRETIVE

As used in this Agreement, the following terms shall have meanings as set out below:

1.1 “Application for Compensation” means written form for a request from Consultant to be paid for completed work.

1.2 "City" means City of Hutto, Texas.

1.3 “Compensation” means amounts paid for services under this Agreement.

1.4 "Consultant" means FREESE AND NICHOLS, INC. and its officers, partners, employees, agents and representatives, and all Sub-Consultants, if any, as well as all other persons or entities for which Consultant legally is responsible.

1.5 "Director" means the Hutto City Manager or his/her designee.

1.6 "Owner Designated Representative (ODR)” means person designated by City to act for City.

1.7 "Plans and Specifications" means the construction documents.

1.8 "Project" means the specific Engineering Services work for which services are negotiated and executed by both Parties.

1.9 "Proposal" means Consultant's Proposal to provide services for this Project.

1.10 “Proposed Task Order Request” means a request to Consultant to submit a Proposal for a specific Project as further defined herein.

1.11 “AMSA” means the Austin Metropolitan Service Area or Relevant Marketplace, which collectively is comprised of Travis County and the five (5) surrounding counties of Burnet, Williamson, Bastrop, Caldwell, and Hays.

ARTICLE II
COMPENSATION

2.1 The Compensation for all services included in this Agreement and in the Scope of Services for this Agreement shall not exceed **ONE HUNDRED ELEVEN THOUSAND, FIVE HUNDRED TWELVE DOLLARS, ($111,512.00).** The amount to be paid to Consultant, including authorized adjustments, is the total amount payable by City to Consultant for performance of the Services under this Agreement. It is agreed and understood that such amount will constitute full compensation to Consultant for Services included in the Scope of Services and shall meet all applicable requirements of City's Design Guidelines. All City compensation obligations to Consultant are subject to appropriation of funds by City Council.

2.2 **Reimbursable Expenses**. City's non-allowable reimbursement list. Only when and only to the extent that any such may be authorized by City in writing, the Consultant shall be entitled to reimbursement at actual incurred cost for services and related expenses for the following items, and for no other expenses:

2.2.1 Travel outside AMSA only if approved in writing by City prior to such travel. Reimbursement for travel costs will be limited to costs directly associated with Consultant's performance of Service under the Agreement. Travel costs are limited to the applicable mileage and per diem rates set annually by the Federal Government's General Services Administration. Consultant shall provide detailed receipts for all reimbursable charges. Travel expenses, if any, shall be negotiated with each Task Order issued. City does not pay for Consultant's travel within AMSA.

2.2.2 Mailing, courier services and copies of documents requested by City in writing in excess of the copies to be provided under Article IV of this Agreement. These costs, if any, shall not exceed the amount noted in Article IV herein, without further prior written approval of City. Consultant shall bear these costs. Except to the extent so approved.

2.2.3 Preparation, production, reproduction, and transmittal (except as provided in paragraph 2.2.2) of graphics, physical models, presentation boards requested by City in writing in excess of the hard copies to be provided under Article IV of this Agreement. These costs shall not exceed the amount noted in Article IV herein without prior written approval of City. Consultant shall bear these costs unless agreed to, except to the extent so approved.

2.2.4 City does not allow a markup on any of the above reimbursable items and only will reimburse approved hard costs incurred.

2.2.5 As an exception to the method for notice provided in Article XXIV, writings described in paragraph 2.2 may be transmitted via electronic mail to the parties' respective email addresses to be designated in an applicable Task Order.

2.2.6 Such other reimbursable services and/or expenses as may be expressly provided as being reimbursable in Individual Task Orders but only for the specific Project authorized by any such Task Order. Any such authorization shall not establish precedent, course of dealing, or other implied authorization for reimbursable items for any other Project.

Sub-Consultant Work. City will not pay a markup to Consultant for Sub-Consultant work.

ARTICLE III METHOD OF PAYMENT

3.1 Payments to Consultant shall be in the amount shown on the invoices and its supporting documentation submitted for work, including any materials, services and expenses, satisfactory to the City, and shall be subject to City's approval. All services shall be performed in accordance with the professional standard of care set forth in **Section 20.1** herein and to City's satisfaction, which satisfaction shall be judged by the Director in his/her sole discretion, and City shall not be liable for any payment under this Agreement for services which are unsatisfactory and which previously have not been approved by the Director. The final payment due hereunder will not be paid until all reports, data and documents have been submitted, received, accepted and approved by City.

3.1.1 Payment may be made based solely on the units of services completed and approved by City and the associated unit price for such service, as may be described in Compensation for Additional Professional Services (attached hereto, incorporated by reference herein and labeled as "**Exhibit 1"**).

3.1.2 Monthly payments for services performed in the various additional services will be reviewed by Director upon Consultant entering itemized invoices, with all required back-up, within the Portal. The invoice shall indicate the value of the additional services performed to date.

3.2 Consultant shall, within ten (10) days following receipt of Compensation from City, pay all bills for services performed and furnished by Sub-Consultants, in connection with the Project and the performance of the work, and shall provide City with evidence of such payment. Consultant's failure to make payments within such time shall constitute a material breach of this Agreement, unless Consultant is able to demonstrate to City bona fide disputes associated with the unpaid Sub-Consultant and its services. Consultant shall include a provision in each of its sub-agreements imposing the same payment obligations on the Sub-Consultants as are applicable to Consultant hereunder, and shall require Sub-Consultants to provide confirmation to City of receipt of payments. If Consultant has failed to make payment promptly to the Sub- Consultant for the Services for which City has made payment to Consultant, City shall be entitled to withhold payment to Consultant to the extent necessary to protect City except in the event of a valid dispute between Consultant and that Sub-Consultant.

3.3 Consultant warrants that title to all Services covered by an Application for Payment will pass to City no later than the time of payment. Consultant further warrants that, upon submittal of an Application for Compensation, all Services for which Applications for Compensation have been previously issued and payments received from City shall, to the best of Consultant's knowledge, information and belief, be free and clear of liens, claims, security interests or encumbrance in favor of Consultant or other persons or entities making a claim by reason of having provided labor or services relating to this Agreement. Consultant may submit a request for Partial Compensation prior to the completion of services. A request for Partial Compensation must be accompanied by a progress report detailing the Services performed. Any partial payment made shall be in proportion to the Services performed, as reflected in the progress report and approved by the Director and at City's sole discretion. Compensation also may be made based solely on the tasks and services completed and approved by City and the associated unit price for each Service/Project, as may be described in fee schedule and/or hourly rates included in "**Exhibit 1"** hereto.

3.4 Project Close Out and Final Payment:

3.4.1 Final billing shall indicate "Final Bill - no additional compensation is due to Consultant".

3.4.2 City may withhold compensation to such extent as may be necessary, in City's opinion, to protect City from damage or loss for which Consultant is responsible, because of:

3.4.2.1 delays in the performance of Consultant's work;

3.4.2.2 third-party claims filed or reasonable evidence indicating probable filing of such claims, unless security acceptable to City is provided by Consultant;

3.4.2.3 failure of Consultant to make payments properly to Sub-Consultants or vendors for labor, materials or equipment;

3.4.2.4 reasonable evidence that Consultant's work cannot be completed for the amount unpaid under this Agreement;

3.4.2.5 damage to City; or

3.4.2.6 persistent failure by Consultant to carry out the performance of its services in accordance with this Agreement.

3.4.3 When the above reasons for withholding are removed or remedied by Consultant, compensation of the amount withheld will be made within a reasonable time. City shall not be deemed in default by reason of withholding compensation as provided for in this **Article III**.

3.4.3.1 In the event of any dispute(s) between the parties, regarding the amount properly compensable for any Phase or as final compensation, or regarding any amount that may be withheld by City, Consultant shall be required to make a claim pursuant to and in accordance with the terms of this Agreement and follow the procedures provided herein for the resolution of such dispute. In the event Consultant does not initiate and follow the claims procedures provided in this Agreement in a timely manner and as required by the terms thereof, any such claim shall be waived.

3.4.3.2 City shall make final compensation of all sums due Consultant not more than thirty (30) days after Consultant's execution and delivery of a final Pay Application.

3.4.3.3 Request of final compensation by Consultant shall constitute a waiver of claims except those previously made in writing and identified by Consultant as unsettled at the time of final application for compensation.

3.4.3.4 Consultant agrees to maintain adequate books, payrolls and records satisfactory to City in connection with any and all Services performed hereunder. Consultant agrees to retain all such books, payrolls and records (including data stored in computer) for a period of not less than four (4) years after completion of Services. At all reasonable times, City and its duly authorized representatives shall have access to all personnel of Consultant and all such books, payrolls and records, and shall have the right to audit same.

ARTICLE IV
SCOPE OF SERVICES
[SUBJECT TO REVISION AS APPLICABLE]

4.1 Consultant agrees and acknowledged that City is entering into this Agreement in reliance on Consultant's represented expertise and special and unique abilities to provide the Services. Consultant accepts the relationship of trust and confidence established between it and City by this Agreement and covenants to use Consultant's best professional effort, skill, judgment, and abilities in performing the Services, and to further the interests of City in accordance with the usual and customary standards of care, skill and diligence of Consultant's profession, consistent with good professional design practices for firms that provide professional design services for projects that are similar in size, scope, budget to the Project, and in compliance with all Applicable Law. Consultant shall be solely responsible for the full cost of correcting any non-conforming Services, including any rendered by any others who have acted in reliance thereon.

4.2 Consultant shall provide Professional Services and include in its Scope of Services all associated services required such that the Project can be built, with any alternates, within the Project Construction Budget at or under the Construction Cost Limitation. By executing this Agreement, Consultant acknowledges receipt and comprehension of the Construction Cost Limitation. Consultant shall allocate adequate time, personnel and resources as necessary to perform the Services. Consultant shall perform the Services as expeditiously as is consistent with such professional skill and care and the orderly progress of the Project and in accordance with the standards set forth in Section 4.1.

4.3 Consultant shall comply with the standards of City's Design Guidance Manual throughout the duration of the subject Project and this Agreement, unless specifically and explicitly excluded from doing so in the approved Scope of Services attached hereto, incorporated by reference herein and labeled as "**Exhibit 3"** and as described in this **Article IV**.

4.4 Consultant shall adhere to the requirements of the design phases described in City's design

Guidance Manual, to include performing the tasks and submitting deliverables as described therein, unless specifically and explicitly excluded in the approved Scope of Service in **"Exhibit 3"** hereto and as described in this **Article IV.**

4.5 Consultant acknowledges and accepts its responsibilities as defined and described in City's General Conditions, attached hereto, incorporated by reference herein and labeled as "**Exhibit 4"**.

4.6 Consultant shall provide all labor, equipment and transportation necessary to complete all services agreed to hereunder in a timely manner throughout the term of the Contract. Additionally, Consultant shall provide staff for regular, overtime, night, weekend and holiday service, as requested by City. Persons retained by Consultant to perform work pursuant to this Agreement shall be employees or subcontractors of Consultant.

4.7 Consultant shall not commence service on any Task Order authorized under this Agreement until being thoroughly briefed on the scope of the project and being notified in writing to proceed. Should the scope subsequently change, either Consultant or City may request a review of the anticipated services, with an appropriate adjustment in compensation.

4.8 Consultant, in consideration for the compensation herein described, shall render the professional services described in this **Section IV** necessary for the advancement of the Project through Substantial Completion to Final Completion.

4.9 Consultant shall perform its obligations under this Agreement in accordance with the Scope of Services outlined herein and in accordance with the Compensation for Additional Professional Services, attached and incorporated herein and labeled as **"Exhibit 3"**. The Scope of Services fully shall be described in Consultant's Proposal, as revised in accordance with negotiations with and approval by City for each authorized service task and as provided in this Agreement.

4.10 Compensation for Additional Professional Services, which includes pre-priced tasks and/or hourly rates, is described in **"Exhibit 1"** hereto.

ARTICLE V
TIME AND PERIOD OF SERVICE

5.1 The term of this Agreement shall commence upon its approval by the HuttoCity Council and its execution by both parties.

5.2 Time is of the essence for this Agreement. Consultant shall perform and complete its obligations for the services under **Article IV** herein in a prompt and continuous manner, so as to not delay the development of services and so as to not delay the construction of the work for the Project, in accordance with the schedules approved by City. City will perform its obligations of review and approval in a prompt and continuous manner so as to not delay the project.

5.3 Consultant shall not be liable or responsible for any delays due to strikes, riots, acts of God, national emergency, acts of the public enemy, governmental restrictions, laws or regulations, or any other causes beyond Consultant's reasonable control. Within twenty-one (21) days from the occurrence of any event, for which time for performance by Consultant shall be significantly

extended under this provision, Consultant shall give written notice thereof to City stating the reason for such extension and the actual or estimated time thereof. If City determines that Consultant is responsible for the need for extended time, City shall have the right to make a Claim as provided in this Agreement.

5.4 This Agreement shall remain in force for a period which may reasonably be required for the design, award of the contract and the completion of the Project, including any extra work and any required extensions thereto, unless terminated, as provided for elsewhere in this Agreement.

ARTICLE VI
(RESERVED)

ARTICLE VII
COORDINATION WITH CITY

7.1 Consultant shall hold periodic conferences with City through the end of the Project. The Project shall have the full benefit of City's experience and knowledge of existing needs and facilities and be consistent with City's current policies and standards. To assist Consultant in this coordination, City shall make available, for Consultant's use in planning and designing the Project, all existing plans, maps, statistics, computations and other data in City's possession, relative to existing facilities and to this particular Project, at no cost to Consultant. However, any and all such information shall remain the property of City and shall be returned by Consultant to City upon termination or the completion of the Project or if instructed to do so by the Director.

7.2 The Director or his/her representative shall act on behalf of City, with respect to the services to be performed under this Agreement. The Director shall have complete authority to transmit instructions, receive information and interpret and define City's policies and decisions, with respect to materials, equipment, elements and systems pertinent to Consultant's services.

7.3 City promptly will give written notice to Consultant whenever City observes, discovers or otherwise becomes aware of any defect in Consultant's services, or any development that affects the scope or timing of Consultant's services.

7.4 Unless otherwise required by City, City shall furnish approvals and permits from all governmental authorities having jurisdiction over the Project and other such approvals and consents from others, as may be necessary, for the completion of the Project. Consultant will provide City reasonable assistance in connection with such approvals and permits, such as the furnishing of data compiled by Consultant pursuant to other provisions of the Agreement, but Consultant shall not be obligated to develop additional data, prepare extensive reports or appear at hearings or the like unless compensated therefore under other provisions of this Agreement.

ARTICLE VIII
REVISIONS TO DOCUMENTS

Consultant shall make, without expense to City, such revisions to the drawings, reports or other documents, as may be required to meet the needs of City and which are within its Scope of Services. After the approval of reports or other documents by City, any revisions, additions or other modifications made at City's request, which involve extra services and expenses incurred by Consultant, only shall be requested through an additional Amendment and Task Order for services.

ARTICLE IX
OWNERSHIP OF DOCUMENTS

9.1 All documents, including the original drawings, estimates, specifications and all other documents and data, previously owned by Consultant, shall remain the property of Consultant as instruments of service. However, it is to be understood that City shall have free access to all such information and hold the right to make and retain copies of drawings, estimates, specifications and all other documents and data. Any reuse, without specific written verification or adaptation by Consultant, will be at City's sole risk and without liability or legal exposure to Consultant.

9.2 Consultant acknowledges and agrees that upon payment City exclusively shall own any and all information in whatsoever form and character produced and/or maintained in accordance with, pursuant to or as a result of this Agreement and said information shall be used as City desires. Any and all documents, including the original drawings, estimates, specifications and all other documents and data, shall be delivered to City at no additional cost to City, upon request, termination or completion of this Agreement without restriction on future use.

9.3 Consultant agrees and covenants to protect any and all proprietary rights of City in any materials provided to Consultant. Such protection of proprietary rights by Consultant shall include, but not be limited to, the inclusion in any copy intended for publication of copyright mark reserving all rights to City. Additionally, any materials provided to Consultant by City shall not be released to any third party without the consent of City and shall be returned intact to City upon termination or completion of this Agreement or if instructed to do so by the Director.

9.4 Consultant hereby assigns all statutory and common law copyrights to any copyrightable work that, in part or in whole, was produced from this Agreement is the property of City, including all equitable rights. No reports, maps, documents or other copyrightable works, produced in whole or in part by this Agreement, shall be subject of an application for copyright by Consultant. All reports, maps, project logos, drawings or other copyrightable work produced under this Agreement shall become the property of City (excluding any instrument of services, unless otherwise specified herein). Consultant shall, at its own expense, defend all suits or proceedings instituted against City and pay any award of damages or loss resulting from an injunction against City, insofar as the same are based on any claim that materials or work provided under this Agreement constitute an infringement of any patent, trade secret, trademark, copyright or other intellectual property rights.

9.5 Consultant may make copies of any and all documents and items for its files. Consultant shall have no liability for changes made to or use of the drawings, specifications and other documents by other engineers or other persons, subsequent to the completion of the Project. City requires that Consultant appropriately mark all changes or modifications on all drawings, specifications and other documents by other Engineers or other persons, including electronic copies, subsequent to the Final Completion of the Project. Following Final Completion of the Project, if City requests Consultant perform additional scope beyond that listed in "**Exhibit 3"** hereto, City will appropriately compensated for such work performed by Consultant.

9.6 Copies of documents, which may be relied upon by City, are limited to the printed copies (also known as hard copies) and PDF electronic versions that are sealed and signed by Consultant. Files in editable electronic media format of text, data, graphics or other types, (such as DWG or DGN) that are furnished by Consultant to City or utility only are for convenience of City or utility. Any conclusion or information obtained or derived from such electronic files will be at the user's sole risk.

9.7 Notwithstanding anything to the contrary contained herein, all previously owned intellectual property of Consultant, including but not limited to, any computer software (object code and source code), tools, systems, equipment or other information used by Consultant or its suppliers in the course of delivering the Services hereunder, and any know-how, methodologies or processes used by Consultant, to provide the services or protect deliverables to City, including without limitation, all copyrights, trademarks, patents, trade secrets and any other proprietary rights inherent therein and appurtenant thereto, shall remain the sole and exclusive property of Consultant or its suppliers.

ARTICLE X
TERMINATION AND/OR SUSPENSION OF SERVICES

10.1 Right of Either Party to Terminate for Default

10.1.1 This Agreement may be terminated by either party for substantial failure by the other party to perform, through no fault of the terminating party, in accordance with the terms of this Agreement and a failure to cure as provided in this **Article X**.

10.1.2 The party not in default must issue a written and signed Notice of Termination, citing this **Paragraph 10.1.2**, to the other party declaring the other party to be in default and stating the reason(s) why it is in default. Upon receipt of such written Notice of Default, the party in receipt shall have a period of ten (10) calendar days to cure any failure to perform under this Agreement. Upon the completion of said ten-day period, commencing upon receipt of Notice of Termination, if such party has not cured any failure to perform, such termination shall become effective without further written notice.

10.2 **Right of City to Terminate**. City reserves the right to terminate this Agreement, for reasons other than substantial failure by Consultant to perform, by issuing a signed Notice of Termination, citing this **Paragraph 10.2**, which shall take effect on the twentieth (20th) calendar day following receipt of said notice and upon the scheduled completion date of the performance phase in which Consultant then currently is working, whichever effective termination date occurs first.

10.3 Right of City to Suspend Giving Rise to Right of Consultant to Terminate

10.3.1 City reserves the right to suspend this Agreement at the end of any phase for the convenience of City by issuing a written and signed Notice of Suspension, citing this **Paragraph 10.3.1**, which shall outline the reasons for the suspension and the expected duration of the suspension, but such expected duration shall, in no way, guarantee what the total number of days of suspension will occur. Such suspension shall take effect immediately upon receipt of said Notice of Suspension by the Consultant.

10.3.2 Consultant hereby is given the right to terminate this Agreement in the event such suspension extends for a period in excess of one hundred twenty (120) calendar days. Consultant may exercise this right to terminate by issuing a signed, written Notice of Termination, citing this **Paragraph 10.3.2**, to City after the expiration of one hundred twenty (120) calendar days from the effective date of the suspension. Termination, pursuant to this **Paragraph 10.3.2**, shall become effective immediately upon receipt of said written notice by City.

10.4 Procedures Consultant to follow upon Receipt of Notice of Termination

10.4.1 Upon receipt of a Notice of Termination and prior to the effective date of termination, unless the notice otherwise directs or Consultant immediately takes action to cure a failure to perform under the cure period set out hereinabove, Consultant immediately shall begin the phase-out and the discontinuance of all services, in connection with the performance of this Agreement, and shall proceed promptly to cancel all existing orders and contracts insofar as such orders and contracts are chargeable to this Agreement. Within thirty (30) calendar days after receipt of such Notice of Termination, unless Consultant successfully has cured a failure to perform, Consultant shall submit a statement showing in detail the services performed under this Agreement prior to the effective date of termination. City retains the option to grant an extension to the time period for submittal of such statement.

10.4.2 Copies of all completed or partially completed specifications and all reproductions of all completed or partially completed designs, plans and exhibits prepared under this Agreement, prior to the effective date of termination, shall be delivered to City, in the form requested by City, as a pre-condition to final payment. These documents shall be subject to the restrictions and conditions set forth in **Article IX** herein.

10.4.3 Upon the above conditions being met, absent any reason why City may be compelled to withhold fees, City promptly shall pay Consultant that proportion of the prescribed fee which the services actually performed under this Agreement bear to the total services called for under this Agreement, less any previous payments of the fee.

10.4.4 City, as a public entity, has a duty to document the expenditure of public funds. Consultant acknowledges this duty imposed upon City. Consultant further acknowledges that the failure of Consultant to comply with the submittal of the statement and documents, as required above, shall constitute a waiver by Consultant of any and all rights or claims to payment for services performed under this Agreement by Consultant.

10.4.5 Failure of Consultant to comply with the submittal of the statement and documents, as required above, shall constitute a waiver by Consultant of any and all rights or claims to collect monies that Consultant otherwise may be entitled to for services performed under this Agreement.

10.5 Procedures Consultant to Follow upon Receipt of Notice of Suspension

10.5.1 Upon receipt of written Notice of Suspension, which date also shall be the effective date of the suspension, Consultant shall, unless the Notice otherwise directs, immediately begin to phase-out and discontinue all services in connection with the performance of this Agreement and promptly shall proceed to suspend all existing orders and contracts, insofar as such orders and contracts are chargeable to this Agreement.

10.5.2 Consultant shall prepare a statement showing, in detail, the services performed under this Agreement prior to the effective date of suspension.

10.5.3 Copies of all completed or partially completed designs, plans and specifications, prepared under this Agreement prior to the effective date of suspension, shall be prepared for possible delivery to City but shall be retained by Consultant until such time as Consultant may exercise the right to terminate.

10.5.4 In the event that Consultant exercises the right to terminate one hundred twenty (120) calendar days after the effective suspension date, within thirty (30) calendar days after receipt by City of Consultant's Notice of Termination, Consultant promptly shall cancel all existing orders and contracts, insofar as such orders and contracts are chargeable to this Agreement, and shall submit the above referenced statement showing, in detail, the services performed under this Agreement prior to the effective date of suspension.

10.5.5 Any documents prepared in association with this Agreement shall be delivered to City as a pre-condition to final payment.

10.5.6 Upon the above conditions being met, absent any reason why City may be compelled to withhold fees, City promptly shall pay Consultant that proportion of the prescribed fee which the services actually performed under this Agreement bear to the total services called for under this Agreement, less any previous payments of the fee.

10.5.7 City, as a public entity, has a duty to document the expenditure of public funds.

10.5.8 Consultant acknowledges this duty imposed upon City. Consultant further acknowledges that the failure of Consultant substantially to comply with the submittal of the statements and documents, as required herein, shall constitute a waiver by Consultant of any portion of the fee for which Consultant did not supply such necessary statements and/or documents.

ARTICLE XI
CONSULTANT'S WARRANTY

Consultant warrants that the services required under this Agreement will be performed with the same degree of professional skill and care that typically are exercised by similar consulting professionals performing similar services in Williamson County, Texas. Consultant further warrants that it has not employed or retained any company or person other than a bona fide employee, working solely for Consultant, to solicit or secure this Agreement, and that it has not, for the purpose of soliciting or securing this Agreement, paid or agreed to pay any company or person a commission, percentage, brokerage fee, gift or any other consideration, contingent upon or resulting from the award or making of this Agreement. For breach of this warranty, City shall have the right to terminate this Agreement under the provisions of **Article X** herein.

ARTICLE XIII
ASSIGNMENT OR TRANSFER OF INTEREST

Consultant shall not assign or transfer Consultant's interest in this Agreement without the written consent of City.

ARTICLE XIV
INSURANCE REQUIREMENTS

14.1 Prior to the commencement of any work under this Agreement, Consultant shall furnish copies of all required endorsements and completed Certificate(s) of Insurance to the City Manager. The Certificate(s) shall be completed and signed by an agent authorized by that insurer to bind coverage on its behalf. City will not accept a Memorandum of Insurance or Binder as proof of insurance. The certificate(s) must have the agent's signature and phone number and be mailed, with copies of all applicable endorsements, directly from the insurer's authorized representative to City. City shall have no duty to pay or perform under this Agreement until such certificate and endorsements have been received and approved by City.

14.2 City reserves the right to review the insurance requirements of this **Article XIV** during the effective period of this Agreement and any extension or renewal hereof and to request the modification of insurance coverage and limits when deemed necessary and prudent by City's Risk Manager, based upon changes in statutory law, court decisions or circumstances surrounding this Agreement. In no instance will City allow modification whereby City may incur increased risk.

14.3 Consultant's financial integrity is of interest to City; therefore, subject to Consultant's obligation to maintain reasonable deductibles in such amounts as are approved by Consultant's insurance companies, Consultant shall obtain and maintain in full force and effect for the duration of this Agreement and any extension hereof at Consultant's sole expense, insurance coverage written on an occurrence basis, unless otherwise indicated, by companies authorized to do business in the State of Texas and with an A.M Best's rating of no less than A- (VII), in the following types and for an amount not less than the amount listed below. These listed insurance limits are standard limits for all City projects. If a project does not justify these standard limits of insurance coverages, Consultant may request a review of the City's insurance requirements, to be considered on a project-by-project basis:

TYPE	AMOUNTS
1. Workers Compensation	Statutory
2. Employer's Liability	$1,000,000
3. Commercial General Liability Insurance to include coverage for the following: a. Premises/Operation b. Independent Contractors c. Products/Completed Operations d. Personal Injury e. Contractual Liability f. Environmental Impairment/Impact – sufficiently broad to cover disposal liability g. Explosion, Collapse, Underground h. Damage to property rented by you	For Bodily and Property Damage of $1,000,000 per occurrence; $1,000,000 General Aggregate, or its equivalent in Umbrella or Excess Liability Coverage h. $100,000
4. Business Automobile Liability a. Owned/Leased vehicles b. Non-owned vehicles c. Hired vehicles	Combined Single Limit for Bodily Injury and Property Damage of $1,000,000 per occurrence
5. Professional Liability (Claims-made basis) To be maintained and in effect for no less than two years subsequent to the completion of the professional service.	$1,000,000 per claim, to pay on behalf of the insured all sums which the insured shall become legally obligated to pay as damages to the extent caused by any negligent act, terror, or omission in performance of professional services.

City may request, and without expense to City, to inspect copies of Consultant's policies and endorsements as they apply to the limits and forms required by City.

14.4 Consultant agrees to require, by written contract, that all Sub-Consultants and/or Subcontractors providing goods or services hereunder obtain the same insurance coverage required of Consultant herein, and provide a certificate of insurance and endorsement that names Consultant and City as additional insureds. Consultant shall provide City with said certificate and endorsement prior to the commencement of any work by any Sub-Consultant and/or Subcontractor. This provision may be modified by City's Risk Manager, without subsequent City Council approval, when deemed necessary and prudent, based upon changes in statutory law, court decisions or circumstances surrounding this Agreement. Such modification may be enacted by letter signed by City's Risk Manager, which shall become a part of the contract for all purposes.

14.5 If City requests a copy/copies of an insurance policy, Consultant prominently shall comply and Consultant shall mark those portions of the policy, if any, Consultant regards as confidential. In the event a third party makes an Open Records Request under the Texas Open Records ActAct or other public information law asking to view or copy Consultant's policy, City shall submit the received request, along with Consultant's information to the Texas Attorney General (hereafter referred to as "AG") for an opinion regarding the release of Consultant's policy information. Consultant and City agree that City will be bound by the AG opinion/decision. Similarly, Consultant agrees and accepts City will provide all Consultant information pursuant to a court order or a litigation discovery rule requiring or directing City To disclose any of Consultant's information.

14.6 Consultant agrees, with respect to the above required insurance, all insurance policies are to contain or be endorsed to contain the following provisions, to the extent permitted by policy provisions, to the extent permitted by policy provisions, terms and conditions:

- Name City, its officers, officials, employees, volunteers, and elected representatives as additional insureds by endorsement or within policy provisions, terms or conditions, with respect to operations and activities of, or on behalf of, the named insured performed under contract with City, with the exception of the workers' compensation and professional liability policies;

- Provide for an endorsement that the "other insurance" clause shall not apply to the City of Hutto where City is an additional insured shown on the policy, as allowed by respective policy provisions, terms and conditions;

- Workers' compensation, employers' liability, general liability and automobile liability policies will provide a waiver of subrogation in favor of City; and

- Where allowed by respective policy provisions, terms and conditions, provide thirty (30) calendar days advance written notice to City of any cancellation or non-renewal or material change in coverage, any change in policy limits by endorsement and not less than ten (10) calendar days advance notice for nonpayment of premium.

14.8 Within ten (10) calendar days of notice to Consultant of a cancellation or non-renewal of coverage, Consultant shall provide a replacement Certificate of Insurance and applicable endorsements to City. City shall have the option to suspend Consultant's performance, should there be a lapse in coverage at any time during this contract. Failure to provide and to maintain the required insurance shall constitute a material breach of this Agreement.

14.9 In addition to any other remedies City may have upon Consultant's failure to provide and maintain any insurance or policy endorsements, to the extent and within the time herein required, City shall have the right to order Consultant to stop work hereunder until Consultant demonstrates compliance with the requirements hereof.

14.10 Nothing herein contained shall be construed as limiting in any way the extent to which Consultant may be held responsible for payments of damages to persons or property resulting from Consultant's or its Sub-Consultants' and/or Subcontractors' performance of the work covered under this Agreement.

14.11 It is agreed that Consultant's insurance shall be deemed primary and non-contributory, with respect to any insurance or self-insurance carried by the City of Hutto, for liability arising out of operations under this Agreement.

14.12 It is understood and agreed that the insurance required is in addition to and separate from any other obligation contained in this Agreement and that no claim or action by or on behalf of City shall be limited to insurance coverage provided.

14.13 Consultant and any Sub-Consultants and/or Subcontractors are responsible for all damage to their own equipment and/or property.

ARTICLE XV
INDEMNIFICATION

15.1 Consultant, whose professional services are the subject of this Agreement, covenants and agrees to FULLY INDEMNIFY and HOLD HARMLESS, City and the elected officials, employees, officers, directors, volunteers and representatives of City, individually and collectively, from and against damages, liabilities or costs, including reasonable attorney fee and defense costs, to the extent caused by Consultant's negligent performance of professional services under this Agreement and anyone for whom Consultant legally or contractually is liable. The indemnity provided for in this Section 15.1 shall not apply to any liability resulting from the negligence of City, its officers or employees, in instances where such negligence causes personal injury, death or property damage. IN THE EVENT CONSULTANT AND CITY ARE FOUND JOINTLY LIABLE BY A COURT OF COMPETENT JURISDICTION, LIABILITY SHALL BE APPORTIONED COMPARATIVELY IN ACCORDANCE WITH THE LAWS FOR THE STATE OF TEXAS, WITHOUT, HOWEVER, WAIVING ANY GOVERNMENTAL IMMUNITY AVAILABLE TO THE CITY UNDER TEXAS LAW AND WITHOUT WAIVING ANY DEFENSES OF THE PARTIES UNDER TEXAS LAW.

15.2 The provisions of this Article XV solely are for the benefit of the parties hereto and not intended to create or grant any rights, contractual or otherwise, to any other person or entity. Consultant shall advise City in writing within twenty-four (24) hours of any claim or demand against City or Consultant known to Consultant related to or arising out of Consultant's activities under this Agreement and shall see to the investigation and defense of such claim or demand at Consultant's cost. City shall have the right, at its option and at its own expense, to participate in such defense without relieving Consultant of any of its obligations under this Section XV.

ARTICLE XVI
CLAIMS AND DISPUTES

16.1 **Definition.** A Claim is a demand or assertion by one of the parties hereto seeking, as a matter of right, adjustment or interpretation of an Agreement's terms, payment of money, extension of time or other relief, with respect to the terms of the Agreement. The term "Claim" also includes other disputes and matters in question arising out of or relating to this Agreement. Claims must be initiated by written notice. Every Claim of Consultant, whether for additional compensation, additional time or other relief, shall be signed and sworn to by an authorized corporate officer (if Consultant is not a corporation, then an official of the company authorized to bind Consultant by his/her signature) of Consultant, verifying the truth and accuracy of the Claim. The responsibility to substantiate Claims shall rest with the party making the Claim.

16.2 **Time Limit on Claims.** Claims by Consultant must be initiated in writing to City within twenty-one (21) calendar days after the occurrence of the event giving rise to such Claim.

16.3 **Continuing Contract Performance.** Pending final resolution of a Claim, except as otherwise agreed in writing, Consultant shall proceed diligently with performance of the Agreement and City shall continue to make payments in accordance with this Agreement.

16.4 **Claims for Additional Time.** If Consultant wishes to make a Claim for an increase in the time for performance, written notice, as stated in this **Section XVI**, must be given. Consultant's Claim shall include an estimate of probable effect of delay on progress of the Work. In the case of a continuing delay, only one Claim is necessary.

16.5 **Claims for Consequential Damages**. Except as otherwise provided in this Agreement, in calculating the amount of any Claim or any measure of damages for breach of contract (such provision to survive any termination following such breach), the following standards will apply both to claims by Consultant and to claims by City:

16.5.1 No consequential damages will be allowed; and

16.5.2 Damages are limited to extra costs specifically shown to have been directly caused by a proven wrong for which the other party is claimed to be responsible; and

16.5.3 No profit will be allowed on any damage claim.

16.6 **No Waiver of Governmental Immunity. NOTHING IN THIS SECTION XVI SHALL BE CONSTRUED TO WAIVE CITY'S GOVERNMENTAL IMMUNITY FROM LAWSUIT, WHICH IMMUNITY IS EXPRESSLY RETAINED TO THE EXTENT IT IS NOT CLEARLY AND UNAMBIGUOUSLY WAIVED BY STATE LAW.**

16.7 Alternative Dispute Resolution.

16.7.1 **Continuation of Services Pending Dispute Resolution.** Each party is required to continue to perform its obligations under this Agreement, pending a final resolution of any dispute arising out of or relating to this Agreement, unless it would be impossible or impracticable under the circumstances

16.7.2 **Requirement for Senior Level Negotiations.** Before invoking mediation or any other alternative dispute process set forth herein, the parties agree that they first shall try to resolve any dispute arising out of or related to this Agreement through discussions directly between those senior management representatives within their respective organizations who have overall managerial responsibility for similar projects. This step shall be a condition precedent to use of any other alternative dispute resolution process. If the parties' senior management representatives cannot resolve the dispute within thirty (30) calendar days, after a party delivers a written notice of such dispute, then the parties shall proceed with the mediation alternative dispute resolution process contained herein. All negotiations pursuant to this clause are confidential and shall be treated as compromise and settlement negotiations for purposes of applicable rules of evidence.

16.7.3 Mediation.

16.7.3.1 In the event that City or Consultant shall contend that the other has committed a material breach of this Agreement, the party alleging such breach shall, as a condition precedent to filing any lawsuit, request mediation of the dispute.

16.7.3.2 Request for mediation shall be in writing, and shall request that the mediation commence not less than thirty (30) or more than ninety (90) calendar days following the date of the request, except upon agreement of both parties.

16.7.3.3 In the event City and Consultant are unable to agree to a date for the mediation or to the identity of the mediator or mediators within 30 calendar days following the date of the request for mediation, all conditions precedent in this **Article XVI** shall be deemed to have occurred.

16.7.3.4 The parties shall share the mediator's fee and any filing fees equally. Venue for any mediation or lawsuit arising under this Agreement shall be in WilliamsonCounty, Texas. Any agreement reached in mediation shall be enforceable as a settlement agreement in any court having jurisdiction thereof. No provision of this Agreement shall waive any immunity or defense. No provision of this Agreement is a consent to suit.

ARTICLE XVII
SEVERABILITY

If, for any reason, any one or more Articles and/or paragraphs of this Agreement are held invalid or unenforceable, such invalidity or unenforceability shall not affect, impair or invalidate the remaining Articles and/or paragraphs of this Agreement but shall be confined in its effect to the specific Article, sentences, clauses or parts of this Agreement held invalid or unenforceable, and the invalidity or unenforceability of any Article, sentence, clause or parts of this Agreement, in any one or more instance, shall not affect or prejudice in any way the validity of this Agreement in any other instance.

ARTICLE XVIII
INTEREST IN CITY CONTRACTS PROHIBITED

18.1 No officer or employee of City shall have a financial interest, directly or indirectly, in any contract with City or shall be financially interested, directly or indirectly, in the sale to City of any land, materials, supplies or service, except on behalf of City as an officer or employee. This prohibition extends to City's Public Service Board, SAWS and other City boards and commissions, which are more than purely advisory. The prohibition also applies to Sub-Contracts on City projects.

18.2 Consultant acknowledges that it is informed that the Charter of City and its Ethics Code prohibit a City officer or employee, as those terms are defined in the Ethics Code, from having a financial interest in any contract with City or any City agency, such as City-owned utilities. Consultant's officer or employee has a "prohibited financial interest" in a contract with City or in the sale to City of land, materials, supplies or service, if any of the following individual(s) or entities is a party to the contract or sale: a. a City officer or employee; b. a City officer or employee's parent, child or spouse; c. a business entity in which City officer or employee, or the officer or employee's parent, child or spouse, owns ten percent (10%) or more of the voting stock or shares of the business entity, or ten percent (10)%) or more of the fair market value of the business entity; d. a business entity in which any individual or entity above listed is a subcontractor on a City contract, a partner or a parent or subsidiary business entity.

18.3 Consultant warrants and certifies, and this Agreement is made in reliance thereon, that Consultant, its officers, employees and agents are neither officers nor employees of City. Consultant further warrants and certifies that is has tendered to City a Discretionary Contracts Disclosure Statement in compliance with City's Ethics Code.

ARTICLE XIX
CONFLICT OF INTEREST

19.1 Consultant acknowledges that it is informed that the Charter of the City of Hutto and its Ethics Code prohibit a City officer or employee, as those terms are defined in the Ethics Code, from having a direct interest in any contract with the City.

19.2 Pursuant to the subsection above, Consultant warrants and certifies, and this Agreement is made in reliance thereon, that it, its officers, employees, and agents are neither officers nor employees of the City and shall not have a direct interest in the Agreement. Consultant further warrants and certifies that it will comply with the City's Ethics Code.

19.3 **HB 1295 Certificate of Interested Parties (TEC Form 1295).** For contracts needing City Council approval, or any subsequent changes thereto requiring City Council approval, the City may not accept or enter into a contract until it has received from the Consultant a completed, signed, and notarized TEC Form 1295 complete with a certificate number assigned by the Texas Ethics Commission ("TEC"), pursuant to Texas Government Code § 2252.908 and the rules promulgated thereunder by the TEC. The Consultant understands that failure to provide said form complete with a certificate number assigned by the TEC may prohibit the City from entering into this Agreement. Pursuant to the rules prescribed by the TEC, the TEC Form 1295 must be completed online through the TEC's website, assigned a certificate number, printed, signed, and notarized, and provided to the

City. The TEC Form 1295 must be provided to the City prior to the award of the contract. The City does not have the ability to verify the information included in a TEC Form 1295, and does not have an obligation or undertake responsibility for advising Consultant with respect to the proper completion of the TEC Form 1295.

19.4 **No Boycott of Israel; No Terrorist Organization.**

Pursuant to Section 2270.002, Texas Government Code, the CONSULTANT hereby represents that it and its parent company, wholly- or majority-owned subsidiaries, and other affiliates, if any, do not boycott Israel and, to the extent this Indenture is a contract for goods or services, will not boycott Israel during the term of this Indenture. The foregoing verification is made solely to comply with Section 2270.002, Texas Government Code, and to the extent such Section does not contravene applicable Federal law. As used in the foregoing verification, "boycott Israel" means refusing to deal with, terminating business activities with, or otherwise taking any action that is intended to penalize, inflict economic harm on, or limit commercial relations specifically with Israel, or with a person or entity doing business in Israel or in an Israeli-controlled territory, but does not include an action made for ordinary business purposes.

The CONSULTANT understands "affiliate" to mean an entity that controls, is controlled by, or is under common control with the CONSULTANT and exists to make a profit.

Pursuant to Subchapter F, Chapter 2252, Texas Government Code, the CONSULTANT represents that neither it nor any of its parent company, wholly- or majority-owned subsidiaries, and other affiliates is a company identified on a list prepared and maintained by the Texas Comptroller of Public Accounts under Section 2252.153 or Section 2270.0201, Texas Government Code, and posted on any of the following pages of such officer's internet website:

https://comptroller.texas.gov/purchasing/docs/sudan-list.pdf,
https://comptroller.texas.gov/purchasing/docs/iran-list.pdf, or
https://comptroller.texas.gov/purchasing/docs/fto-list.pdf.

The foregoing representation is made solely to comply with Section 2252.152, Texas Government Code, and to the extent such Section does not contravene applicable Federal law and excludes the CONSULTANT and each of its parent company, wholly- or majority-owned subsidiaries, and other affiliates, if any, that the United States government has affirmatively declared to be excluded from its federal sanctions regime relating to Sudan or Iran or any federal sanctions regime relating to a foreign terrorist organization. The CONSULTANT understands "affiliate" to mean any entity that controls, is controlled by, or is under common control with the CONSULTANT and exists to make a profit.

19.5 **Verification Regarding Energy Company Boycotts.**

To the extent this Agreement constitutes a contract for goods or services for which a written verification is required under Section 2274.002, Texas Government Code, (as added by Senate Bill 13, 87th Texas Legislature, Regular Session) as amended, the CONSULTANT hereby verifies that it and its parent company, wholly- or majority- owned subsidiaries, and other

affiliates, if any, do not boycott energy companies and, will not boycott energy companies during the term of this Agreement. The foregoing verification is made solely to comply with Section 2274.002, Texas Government Code, as amended, to the extent Section 2274.002, Texas Government Code does not contravene applicable Texas or federal law. As used in the foregoing verification, "boycott energy companies" shall have the meaning assigned to the term "boycott energy company" in Section 809.001, Texas Government Code. The CONSULTANT understands "affiliate" to mean an entity that controls, is controlled by, or is under common control with the CONSULTANT and exists to make a profit.

19.6 **Verification Regarding Discrimination Against Firearm Entity or Trade Association.**

To the extent this Agreement constitutes a contract for the purchase of goods or services for which a written verification is required under Section 2274.002, Texas Government Code, (as added by Senate Bill 19, 87th Texas Legislature, Regular Session, "SB 19"), as amended, the hereby verifies that it and its parent company, wholly- or majority- owned subsidiaries, and other affiliates, if any,

(1) do not have a practice, policy, guidance, or directive that discriminates against a firearm entity or firearm trade association; and
(2) will not discriminate during the term of this Agreement against a firearm entity or firearm trade association.

The foregoing verification is made solely to comply with Section 2274.002, Texas Government Code, as amended, to the extent Section 2274.002, Texas Government Code does not contravene applicable Texas or federal law. As used in the foregoing verification, "discriminate against a firearm entity or firearm trade association" shall have the meaning assigned to such term in Section 2274.001(3), Texas Government Code (as added by SB 19). The CONSULTANT understands "affiliate" to mean an entity that controls, is controlled by, or is under common control with the CONSULTANT and exists to make a profit.

ARTICLE XX
STANDARD OF CARE/LICENSING

20.1 Services provided by Consultant under this Agreement shall be performed in a manner consistent with that degree of care and skill ordinarily exercised by members of the same profession currently practicing under similar circumstances.

20.2 Consultant shall be represented by personnel with appropriate certification(s) at meetings of any official nature concerning the Project, including but not limited to scope meetings, review meetings, pre-bid meetings and preconstruction meetings.

ARTICLE XXI
RIGHT OF REVIEW AND AUDIT

21.1 Consultant grants City, or its designees, the right to audit, examine or inspect, at City's election, all of Consultant's records relating to the performance of the Work under this Agreement, during the term of this Agreement and retention period herein. The audit, examination or inspection may be performed by a City designee, which may include its internal auditors or an outside representative engaged by City. Consultant agrees to retain its records for a minimum of four (4) years following termination of the Agreement, unless there is an ongoing dispute under the contract, then, such retention period shall extend until final resolution of the dispute. "Consultant's records" include any and all information, materials and data of every kind and character generated as a result of the work under this Agreement. Example of Consultant records include, but are not limited to, billings, books, general ledger, cost ledgers, invoices, production sheets, documents, correspondence, meeting notes, subscriptions, agreements, purchase orders, leases, contracts, commitments, arrangements, notes, daily diaries, reports, drawings, receipts, vouchers, memoranda, time sheets, payroll records, policies, procedures, federal and state tax filings for issue in question and any and all other agreements, sources of information and matters that may, in City's judgment, have any bearing on or pertain to any matters, rights, duties or obligations under or covered by any Agreement Documents.

21.2 City agrees that it will exercise the right to audit, examine or inspect Consultant's records only during City's regular business hours. Consultant agrees to allow City's designee access to all of Consultant's Records, Consultant's facilities and current or former employees of Consultant, deemed necessary by City or its designee(s), to perform such audit, inspection or examination. Consultant also agrees to provide adequate and appropriate work space necessary to City or its designees to conduct such audits, inspections or examinations.

21.3 Consultant must include this audit clause in any subcontractor, supplier or vendor contract.

ARTICLE XXII
ENTIRE AGREEMENT

This Agreement represents the entire and integrated Agreement between City and Consultant and supersedes all prior negotiations, representations or agreements, either oral or written. This Agreement may be amended only by written instrument signed by both City and Consultant.

ARTICLE XXIII
VENUE

The obligations of the parties to this Agreement shall be performable in Hutto, Williamson County, Texas. If legal action, such as civil litigation, is necessary in connection therewith, exclusive venue shall lie in Williamson County, Texas.

ARTICLE XXIV
NOTICES

Except as may be provided elsewhere herein, all notices, communications, and reports required or permitted under this Agreement shall personally be delivered or mailed to the respective party by depositing the same in the United States Postal Service, addressed to the applicable address shown below, unless and until either party otherwise is notified in writing by the other party of a change of such address. Mailed notices shall be deemed communicated as of five (5) calendar days of mailing. In cases of emergency communication may be provided through email, in person, or telephone notices which shall be followed with the mailing procedure herein described.

If intended for City, to:

City of Hutto

Attention:
Executive Director of Administrative Services
500 West Live Oak
Hutto, TX 78634

(737) 361-8630

Kate.Moriarty@huttotx.gov

If intended for Consultant, to:

Freese and Nichols, Inc.

Bregger Garrison
10431 Morado Circle
Building 5; Suite 300
Austin, Texas 78759

Bregger.Garrison@freese.com

ARTICLE XXV
INDEPENDENT CONTRACTOR

In performing services under this Agreement, the relationship between City and Consultant is that of an independent contractor. By the execution of this Agreement, Consultant and City do not change the independent contractor status of Consultant. Consultant shall exercise independent judgment in performing its duties and obligations under this Agreement and solely is responsible for setting working hours, scheduling or prioritizing the work flow and determining how the work is to be performed. No term or provision of this Agreement or act of Consultant, in the performance of this Agreement, shall be construed as making Consultant the agent, servant or employee of City, or as making Consultant or any of its agents or employees eligible for any fringe benefits, such as retirement, insurance and worker's compensation, which City provides to or for its employees.

ARTICLE XXVI
CAPTIONS

The captions for the individual provisions of this Agreement are for informational purposes only and shall not be construed to effect or modify the substance of the terms and conditions of this Agreement to which any caption relates.

IN WITNESS WHEREOF, City of Hutto has lawfully caused these present to execute this Agreement by the hand of City Manager, or designee; Consultant, acting by the hand of Bregger Garrison, thereunto authorized Freese and Nichols, Inc. does now sign, execute and deliver this document.

Executed on this_____day of _____ A.D._____.

CITY OF HUTTO

_____
James Earp
CITY MANAGER

FREESE AND NICHOLS, INC.
(FIRM)

By: Clayton C Barnard

Clayton Barnard, PE
PRINCIPAL

EXHIBIT 1
INDIVIDUAL PROJECT ORDER

PROJECT FEE SUMMARY
(TO INCLUDE REIMBURSEABLES, IF ANY)
AND TIMELINE FOR DESIGN PHASE SERVICES

In accordance with Agreement for On Demand Services Transportation Rotation List between the City of Hutto (Owner) and Freese and Nichols, Inc., the parties agree as follows:

1. Background Data
    a. Project Number: CIP 23-05B-02
    b. Owner: City of Hutto
    c. Vendor: Freese and Nichols, Inc.

Specific Project (title): CR 132

1) Scope of services for **FREESE AND NICHOLS, INC.** will include the following services (Refer to Attached A for Full Services Detail

    a. Services – See attached Scope of Services

2) Fee: NTE $111,512.00

3) Deadline: This form is to be signed along with any supplementary materials and must be submitted to Dana Philips, CIP Project Manager via email by **8-11-26**, at 12PM CST.

Point of Contact
Dana Philips
CIP Project Manager
Dana.Phillips@HuttoTX.gov
(512) 759-3479

Any questions must be in writing and responses will be provided within 24 hours and shared with other On Demand firms under contract with the City.

Vendor agrees to provide the services within this Individual Project Order ("IPO") and Vendor is authorized to begin performance upon its receipt of a copy of this IPO signed by Owner.

EXHIBIT A

SERVICES TO BE PROVIDED BY THE CITY

The **CITY OF HUTTO** ("CITY") is proposing to realign a segment of CR 132 starting approximately 0.60 miles north of Limmer Loop and ending at CR 133 for a total length of approximately 0.55 miles. The project will construct the interim condition of the ultimate 6-lane Hutto Arterial as presented in the 2024 Williamson County Preliminary Design Schematic by others, which will consist of a 2-lane urban section with a 10' shared use path. The work to be performed under this work authorization by **FREESE AND NICHOLS, INC.** ("ENGINEER") will consist primarily of the preparation of a Preliminary Geometric Layout and Plans, Specifications, and Estimate ("PS&E").

The CITY will provide the following items/information for the ENGINEER under this agreement:

Unless specified otherwise, the scope will remain unchanged from the original contract.

110 - ROUTE DESIGN AND STUDIES – N/A

120 - SOCIAL, ECONOMIC, AND ENVIRONMENTAL STUDIES – N/A

130 - ROW DATA – N/A

145 - PROJECT MANAGEMENT – N/A

150 - DESIGN AND CONSTRUCTION SURVEYS – N/A

160 – ROADWAY DESIGN SERVICES – N/A

161 – DRAINAGE DESIGN SERVICES – N/A

162 – SIGNING AND PAVEMENT MARKINGS SERVICES – N/A

163 – MISCELLANEOUS ROADWAY SERVICES

1. The CITY will review and approve the ENGINEER's recommended Competitive Seal Proposal (CSP) scoring matrix.

EXHIBIT B

SERVICES TO BE PROVIDED BY ENGINEER

The **CITY OF HUTTO** ("CITY") is proposing to realign a segment of CR 132 starting approximately 0.60 miles north of Limmer Loop and ending at CR 133 for a total length of approximately 0.55 miles. The project will construct the interim condition of the ultimate 6-lane Hutto Arterial as presented in the 2024 Williamson County Preliminary Design Schematic by others, which will consist of a 2-lane urban section (curbed on one side) with a 10' shared use path. The work to be performed under this work authorization by **FREESE AND NICHOLS, INC.** ("ENGINEER") will consist primarily of the preparation of a Preliminary Geometric Layout and Plans, Specifications, and Estimate ("PS&E").

The ENGINEER will provide the following items/information for the CITY under this agreement:

Unless specified otherwise, the scope will remain unchanged from the original contract.

110 - ROUTE DESIGN AND STUDIES – N/A

120 – SOCIAL, ECONOMIC, AND ENVIRONMENTAL STUDIES – N/A

130 – ROW DATA – N/A

145 - PROJECT MANAGEMENT

The original scope and schedule were prepared based on the best estimate of the project duration at the time, including construction phase services. Following detailed design, the construction duration was determined to be 6 months longer than originally assumed, requiring an additional 6 months of project administration and coordination effort.

145.1 PROJECT ADMINISTRATION SERVICES

- The Schedule will be extended by six (6) months from original scope of twenty-nine (29) months to thirty-five (35) months.

145.2 PROJECT COORDINATION SERVICES

- The Schedule will be extended by six (6) months from original scope of twenty-nine (29) months to thirty-five (35) months.

150 - DESIGN AND CONSTRUCTION SURVEYS – N/A

160 - ROADWAY DESIGN SERVICES

160.2 ROADWAY DESIGN CONTROLS

- The ENGINEER will issue an additional 100% submittal that will complete detailing required for construction. The initial 100% submittal included all required sheets but without complete detailing, since the number of sheets accounted for in the original scope approximately doubled due to an increase in complexity of the cross-street design and design at the project tie-ins not accounted for in the original scope, including:
    - Removal: scoped = 3, actual = 7
    - Roadway P&P: scoped = 6, actual = 13
    - Cross Sections: scoped = 30, actual = 55

161 - DRAINAGE DESIGN SERVICES

161.3 DETENTION POND DESIGN

The original scope of services assumed analysis and design of one detention pond on the southern end of the project. During the course of design, FNI determined that proposing a detention pond for the intended outfall was infeasible due to topographic constraints and detention would also be needed at 3 other outfalls on the project. FNI's plans will instead reflect in-line detention at 4 storm sewer/culvert outfalls.

- The ENGINEER will prepare detention sizing and design for three (3) additional outfalls not identified during original scoping.

161.4 STORM WATER DRAINAGE SYSTEM DESIGN

- The ENGINEER will issue an additional 100% submittal that will complete detailing required for construction. The initial 100% submittal included all required sheets but without complete detailing for items not included in the original scope, including:
    - Three (3) additional detention structures
    - Ditch along CR 132 to convey offsite flow to the southern-most outfall

162 – SIGNING, PAVEMENT MARKINGS AND DELINEATION SERVICES – N/A

163 – MISCELLANEOUS ROADWAY SERVICES

163.1 - TRAFFIC CONTROL PLAN DESIGN SERVICES

The original scope assumed a simple traffic control design since this is a greenfield project. Although this assumption has proven accurate for most of the project, the traffic control design at the tie-ins and temporary drainage design proved much more complex than originally assumed.

- The ENGINEER will issue an additional 100% submittal that will complete detailing required for construction. The initial 100% submittal included all required sheets but without complete detailing, since the number of phases increased from two (2) phases accounted for with the original scope to eight (8) phases, increasing the number of sheets, including:

- Typical Sections: scoped = 2, actual = 14
- TCP Layout Sheets: scoped = 8, actual = 37
- Detour Sheets: scoped = 2, actual = 5

IRRIGATION DESIGN SERVICES

- The ENGINEER will remove Irrigation design from the 100% submittal.

163.5 ILLUMINATION DESIGN SERVICES

- The ENGINEER will update the illumination design to meet TxDOT standards and include all construction details and calculations needed for illumination items to be constructed entirely by the Contractor and not by Others.
- The ENGINEER will perform Voltage Drop Calculations.

163.7 - SUPPLEMENTAL PS&E DOCUMENTS

The more complex roadway and traffic control plans increased the complexity in preparing supplemental supporting documents.

- The ENGINEER will issue an additional 100% submittal that will complete detailing required for construction. This will include revisions to:
  - OPCC
  - Contract Time Determination (CTD) schedule utilizing the Critical path Method (CPM) in Microsoft Project or Excel.
  - Project Manual, including standard general provisions, instructions to bidders, bid forms, applicable prevailing wage rates, standard and special specifications, special provisions, general notes, and any other information required for complete construction of the Project.
- The ENGINEER will revise the originally prepared Project Manual to be appropriate for a Competitive Seal Proposal (CSP) procurement.

SUBMITTAL REQUIREMENTS

- The ENGINEER will add a submittal consisting of reissued 100% sheets.

COMPENSATION

Compensation to FNI for Basic Services in Attachment SC shall be the lump sum of One Hundred Eleven Thousand Five Hundred Twelve Dollars ($111,512).

If FNI sees the Scope of Services changing so that Additional Services are needed, including but not limited to those services described as Additional Services in Attachment SC, FNI will notify OWNER for OWNER's approval before proceeding. Additional Services shall be computed based on the following Schedule of Charges.

Position	Hourly Rate
Professional 1	132
Professional 2	162
Professional 3	180
Professional 4	208
Professional 5	243
Professional 6	278
Construction Manager 1	114
Construction Manager 2	141
Construction Manager 3	154
Construction Manager 4	193
Construction Manager 5	232
Construction Manager 6	265
Construction Representative 1	102
Construction Representative 2	114
Construction Representative 3	141
Construction Representative 4	154
CAD Technician/Designer 1	112
CAD Technician/Designer 2	144
CAD Technician/Designer 3	179
Corporate Project Support 1	107
Corporate Project Support 2	129
Corporate Project Support 3	172
Intern / Coop	72

Rates for In-House Services and Equipment

Mileage

Standard IRS Rates

Bulk Printing and Reproduction

	B&W	Color
Small Format (per copy)	$0.10	$0.25
Large Format (per sq. ft.)		
Bond	$0.25	$0.75
Glossy / Mylar	$0.75	$1.25
Vinyl / Adhesive	$1.50	$2.00
Mounting (per sq. ft.)	$2.00	
Binding (per binding)	$0.25	

Equipment

Valve Crew Vehicle (hour)	$75
Pressure Data Logger (each)	$500
Water Quality Meter (per day)	$100
Microscope (each)	$150
Ultrasonic Thickness Guage (per day)	$275
Coating Inspection Kit (per day)	$275
Flushing / Cfactor (each)	$500
Backpack Electrofisher (each)	$1,000

	Survey Grade	Standard
Drone (per day)	$200	$100
GPS (per day)	$150	$50

OTHER DIRECT EXPENSES:

Other direct expenses are reimbursed at actual cost times a multiplier of 1.00. They include outside printing and reproduction expense, communication expense, travel, transportation and subsistence away from the FNI office. For other miscellaneous expenses directly related to the work, including costs of laboratory analysis, test, and other work required to be done by independent persons other than staff members, these services will be billed at a cost times a multipler of 1.00. For Resident Representative services performed by non-FNI employees and CAD services performed In-house by non-FNI employees where FNI provides workspace and equipment to perform such services, these services will be billed at cost times a multiplier of 2.0. This markup approximates the cost to FNI if an FNI employee was performing the same or similar services.

These ranges and/or rates will be adjusted annually in February. Last updated 2025.

1022025

CR 132 Amendment 1
8/11/2026
Detailed Cost Breakdown

Project Fee Summary		
Basic Services	$	111,512.00
Special Services	$	-
Additional Services	$	-
Total Project	$	111,512.00

Task Description	Labor							Total Hours	Total Labor Effort
	Project Manager	Asst Project Manager	QC	EIT	CADD	Risk Manag	Biller		
	$243.00	$180.00	$243.00	$162.00	$112.00	$172.00	$129.00		
145 PROJECT MANAGEMENT									
PROJECT ADMIN SERVICES	6	6					6	18	3,312.00
PROJECT COORD SERVICES	12	12						24	5,076.00
160 ROADWAY DESIGN SERVICES									
100% ROADWAY P&P REVISIONS	4	20	4	40	40			108	16,504.00
100% CROSS SECTION REVISIONS	2	40	2	20				64	11,412.00
161 DRAINAGE DESIGN SERVICES									
ADDITIONAL DETENTION DESIGN	4	40	4	20				68	12,384.00
100% STORM SEWER REVISIONS	8	40	4	80	20			152	25,316.00
163 MISCELLANEOUS DESIGN SERVICES									
ADDITIONAL TCP DESIGN & PHASES	2	16	4	60	60			142	20,778.00
100% OPCC REVISIONS	2	4	2	8				16	2,988.00
100% CTD REVISIONS	2	4	8	8				22	4,446.00
100% & CSP PROJECT MANUAL REVISIONS	12	8	12	4		8		44	9,296.00
Total Hours / Quantity	**54**	**190**	**40**	**240**	**120**	**8**	**6**	**658**	
Total Effort	**$ 13,122.00**	**$ 34,200.00**	**$ 9,720.00**	**$ 38,880.00**	**$ 13,440.00**	**$ 1,376.00**	**$ 774.00**		**$ 111,512.00**

Exhibit D - Schedule

ID	Task Name	Duration	Start	Finish	Resource Names
1	**CR 132 Reconstruction Amendment 1**	**125 days**	**Tue 8/11/26**	**Tue 2/23/27**	
2	**Amend 1**	**17 days**	**Tue 8/11/26**	**Wed 9/2/26**	
3	PSSA 1 Due to City	0 days	Tue 8/11/26	Tue 8/11/26	FNI(1146)
4	PSA NTP	10 days	Thu 8/20/26	Wed 9/2/26	FNI(1146)
5	**Final Misc PS&E Revisions**	**108 days**	**Thu 9/3/26**	**Tue 2/23/27**	
6	100% Plans & Manual Development	55 days	Thu 9/3/26	Thu 11/19/26	FNI(1146),FNI(1149)
7	100% QC Review	10 days	Thu 11/19/26	Thu 12/10/26	FNI(1146),FNI(1149)
8	100% Address QC Comments	10 days	Fri 12/11/26	Thu 1/7/27	FNI(1146),FNI(1149)
9	100% Verify Comments & Compile Set	3 days	Fri 1/8/27	Tue 1/12/27	FNI(1146),FNI(1149)
10	100% Due to City	0 days	Tue 1/12/27	Tue 1/12/27	FNI(1146),FNI(1149)
11	100% City Review	30 days	Wed 1/13/27	Tue 2/23/27	City

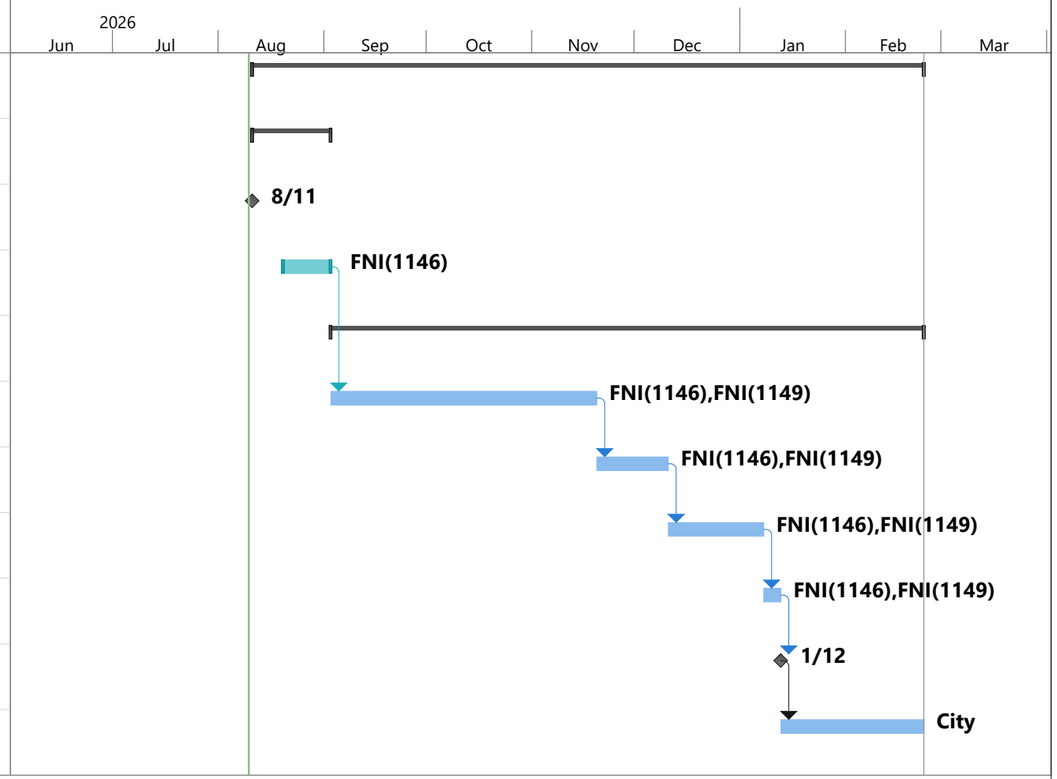

Project: CR 132 Realignment
Date: 8/11/2026

Task	Project Summary	Manual Task	Start-only	Deadline
Split	Inactive Task	Duration-only	Finish-only	Progress
Milestone	Inactive Milestone	Manual Summary Rollup	External Tasks	Manual Progress
Summary	Inactive Summary	Manual Summary	External Milestone	

FREEAND-02 AEVERSOLE

CERTIFICATE OF LIABILITY INSURANCE

DATE (MM/DD/YYYY) 8/10/2026

THIS CERTIFICATE IS ISSUED AS A MATTER OF INFORMATION ONLY AND CONFERS NO RIGHTS UPON THE CERTIFICATE HOLDER. THIS CERTIFICATE DOES NOT AFFIRMATIVELY OR NEGATIVELY AMEND, EXTEND OR ALTER THE COVERAGE AFFORDED BY THE POLICIES BELOW. THIS CERTIFICATE OF INSURANCE DOES NOT CONSTITUTE A CONTRACT BETWEEN THE ISSUING INSURER(S), AUTHORIZED REPRESENTATIVE OR PRODUCER, AND THE CERTIFICATE HOLDER.

IMPORTANT: If the certificate holder is an ADDITIONAL INSURED, the policy(ies) must have ADDITIONAL INSURED provisions or be endorsed. If SUBROGATION IS WAIVED, subject to the terms and conditions of the policy, certain policies may require an endorsement. A statement on this certificate does not confer rights to the certificate holder in lieu of such endorsement(s).

PRODUCER	CONTACT NAME:	
Ames & Gough 8300 Greensboro Drive Suite 980 McLean, VA 22102	PHONE (A/C, No, Ext): (703) 827-2277	FAX (A/C, No): (703) 827-2279
	E-MAIL ADDRESS: admin@amesgough.com	

INSURER(S) AFFORDING COVERAGE	NAIC #
INSURER A : National Fire Insurance Company of Hartford A(XV)	20478
INSURER B : Valley Forge Insurance Company A+(XV)	20508
INSURER C : Continental Insurance Company A+ (XV)	35289
INSURER D : Travelers Casualty and Surety Company A++. XV	19038
INSURER E :	
INSURER F :	

INSURED

Freese and Nichols, Inc.
801 Cherry Street, Suite 2800
Fort Worth, TX 76102

COVERAGES **CERTIFICATE NUMBER:** **REVISION NUMBER:**

THIS IS TO CERTIFY THAT THE POLICIES OF INSURANCE LISTED BELOW HAVE BEEN ISSUED TO THE INSURED NAMED ABOVE FOR THE POLICY PERIOD INDICATED. NOTWITHSTANDING ANY REQUIREMENT, TERM OR CONDITION OF ANY CONTRACT OR OTHER DOCUMENT WITH RESPECT TO WHICH THIS CERTIFICATE MAY BE ISSUED OR MAY PERTAIN, THE INSURANCE AFFORDED BY THE POLICIES DESCRIBED HEREIN IS SUBJECT TO ALL THE TERMS, EXCLUSIONS AND CONDITIONS OF SUCH POLICIES. LIMITS SHOWN MAY HAVE BEEN REDUCED BY PAID CLAIMS.

INSR LTR	TYPE OF INSURANCE	ADDL INSD	SUBR WVD	POLICY NUMBER	POLICY EFF (MM/DD/YYYY)	POLICY EXP (MM/DD/YYYY)	LIMITS	
A	X COMMERCIAL GENERAL LIABILITY CLAIMS-MADE X OCCUR X Contractual Liab. GEN'L AGGREGATE LIMIT APPLIES PER: POLICY X PRO-JECT LOC OTHER:			7063394194	10/23/2025	10/23/2026	EACH OCCURRENCE DAMAGE TO RENTED PREMISES (Ea occurrence) MED EXP (Any one person) PERSONAL & ADV INJURY GENERAL AGGREGATE PRODUCTS - COMP/OP AGG	$ 1,000,000 $ 1,000,000 $ 15,000 $ 1,000,000 $ 2,000,000 $ 2,000,000
B	AUTOMOBILE LIABILITY X ANY AUTO OWNED AUTOS ONLY SCHEDULED AUTOS HIRED AUTOS ONLY NON-OWNED AUTOS ONLY			7063394177	10/23/2025	10/23/2026	COMBINED SINGLE LIMIT (Ea accident) BODILY INJURY (Per person) BODILY INJURY (Per accident) PROPERTY DAMAGE (Per accident)	$ 1,000,000 $ $ $
C	X UMBRELLA LIAB X OCCUR EXCESS LIAB CLAIMS-MADE DED X RETENTION $ 10,000			7063394180	10/23/2025	10/23/2026	EACH OCCURRENCE AGGREGATE	$ 10,000,000 $ 10,000,000
C	WORKERS COMPENSATION AND EMPLOYERS' LIABILITY ANY PROPRIETOR/PARTNER/EXECUTIVE OFFICER/MEMBER EXCLUDED? (Mandatory in NH) Y / N: N If yes, describe under DESCRIPTION OF OPERATIONS below	N / A		7063394213	10/23/2025	10/23/2026	X PER STATUTE OTH-ER E.L. EACH ACCIDENT E.L. DISEASE - EA EMPLOYEE E.L. DISEASE - POLICY LIMIT	$ 1,000,000 $ 1,000,000 $ 1,000,000
D	Professional Liab.			107930947	10/23/2025	10/23/2026	Per Claim	5,000,000

DESCRIPTION OF OPERATIONS / LOCATIONS / VEHICLES (ACORD 101, Additional Remarks Schedule, may be attached if more space is required)

PROFESSIONAL LIABILITY AGGREGATE LIMIT: $10,000,000

Re: CR 132 Realignment Project Number T41-2025

City of Hutto is included as Additional Insured with respect to General Liability, Auto Liability, and Umbrella Liability when required by written contract. General Liability, Auto Liability and Umbrella Liability are primary and non-contributory over any existing insurance and limited to liability arising out of the operations of the named insured and when required by written contract. General Liability, Auto Liability, Umbrella Liability and Workers Compensation
SEE ATTACHED ACORD 101

CERTIFICATE HOLDER

City of Hutto
Attn: City Engineer
500 W Live Oak St
Hutto, TX 78634

CANCELLATION

SHOULD ANY OF THE ABOVE DESCRIBED POLICIES BE CANCELLED BEFORE THE EXPIRATION DATE THEREOF, NOTICE WILL BE DELIVERED IN ACCORDANCE WITH THE POLICY PROVISIONS.

AUTHORIZED REPRESENTATIVE



ACORD 25 (2016/03) © 1988-2015 ACORD CORPORATION. All rights reserved.
The ACORD name and logo are registered marks of ACORD

AGENCY CUSTOMER ID: FREEAND-02 AEVERSOLE

LOC #: 1

ADDITIONAL REMARKS SCHEDULE

AGENCY		NAMED INSURED
Ames & Gough		Freese and Nichols, Inc. 801 Cherry Street, Suite 2800 Fort Worth, TX 76102
POLICY NUMBER		
SEE PAGE 1		
CARRIER	NAIC CODE	EFFECTIVE DATE: SEE PAGE 1
SEE PAGE 1	SEE P 1	

ADDITIONAL REMARKS

THIS ADDITIONAL REMARKS FORM IS A SCHEDULE TO ACORD FORM,

FORM NUMBER: ACORD 25 FORM TITLE: Certificate of Liability Insurance

Description of Operations/Locations/Vehicles:
policies include a Waiver of Subrogation in favor of the Additional Insured where permissible by state law and when required by written contract. 30-day Notice of Cancellation will be issued for the General Liability, Auto Liability, Umbrella Liability, Workers Compensation and Professional Liability policies in accordance with policy terms and conditions.

ACORD 101 (2008/01) © 2008 ACORD CORPORATION. All rights reserved.

The ACORD name and logo are registered marks of ACORD

CERTIFICATE OF INTERESTED PARTIES

FORM 1295

Complete Nos. 1 - 4 and 6 if there are interested parties.
Complete Nos. 1, 2, 3, 5, and 6 if there are no interested parties.

OFFICE USE ONLY
CERTIFICATION OF FILING

Certificate Number:
2026-1500311

Date Filed:
08/10/2026

Date Acknowledged:

1 Name of business entity filing form, and the city, state and country of the business entity's place of business.
Freese and Nichols, Inc.
Corpus Christi, TX United States

2 Name of governmental entity or state agency that is a party to the contract for which the form is being filed.
City of Hutto

3 Provide the identification number used by the governmental entity or state agency to track or identify the contract, and provide a description of the services, goods, or other property to be provided under the contract.
T41-2025
CR 132 Realignment

4 Name of Interested Party	City, State, Country (place of business)	Nature of interest (check applicable)	
		Controlling	Intermediary
Pence, Robert	Fort Worth, TX United States	X	
Coltharp, Brian	Fort Worth, TX United States	X	
Bennett, David	Denver, CO United States	X	
Brown, Jessica	Fort Worth, TX United States	X	
Chambers , Robert	Fort Worth, TX United States	X	
Stull, Cory	Houston, TX United States	X	
Hatley, Tricia	Oklahoma City, OK United States	X	
Huxford , Brandon	Oklahoma City, OK United States	X	
Weatherly, Richard	Pearland, TX United States	X	

5 Check only if there is NO Interested Party. ☐

6 UNSWORN DECLARATION

My name is Lisa Boggs, and my date of birth is [redacted].

My address is 800 N. Shoreline Boulevard, Suite 1600N, Corpus Christi (city), TX (state), 78401 (zip code), USA (country).

I declare under penalty of perjury that the foregoing is true and correct.

Executed in Nueces County, State of Texas, on the 10th day of August (month), 20 26 (year).

Lisa Boggs
Signature of authorized agent of contracting business entity
(Declarant)

AGENDA ITEM REPORT
10.2.

To:	City Council
Subject:	Consideration and possible action on Resolution No. R-2026-175 authorizing the City Manager to execute Individual Project Order (IPO) #2 with WSB, in the amount of $162,000, for Owner's Representative services to support construction project management for City Capital Improvement Program (CIP) projects. (Kate Moriarty)
Meeting:	Thursday, September 3, 2026
Department:	Engineering /
Staff Contact:	Kate Moriarty

ITEM SUMMARY:

The City has utilized WSB, LLC as an Owners Representative following the rotation list approved by City Council under R-2025-267 to provide construction oversight and project management support for active Capital Improvement Program (CIP) projects. Back in May 2026, R-2026-044 City Council approved IPO#1 for a total of $95,000 that was anticipated to exhaust funds in August 2026. As the City's CIP projects continue to advance through construction, approving IPO#2 will provide additional capacity to monitor schedules, contractor performance, change orders, and overall project delivery. WSB, LLC has been a great resource for the City to have in recent months and staff anticipates they will continue to illustrate their value through supporting project delivery.

Continued Owners Representative support will help ensure projects maintain consistent communication and oversight, as well as ensuring issues are identified and addressed timely.

This investment directly supports Strategic Plan 1A – Capital Improvement Program (CIP) Milestone Oversight by providing dedicated resources to monitor and maintain progress toward established CIP project milestones and successful project completion.

STAFF RECOMMENDATION:

Staff recommends approval in order to ensure in-construction CIP projects are receiving sufficient attention and coordination for project delivery.

FISCAL NOTES:

Funding is included in the FY 2027 Budget as follows:

FY 2027 Budget
Series 2024 GO (32)
Account Name: Owners Representative
Account Number: 32-040-023-6405

AGENDA ITEM REPORT
10.2.

Budgeted Amount: $175,000
Requested Amount: $162,000
Amount Remaining: $13,000

ATTACHMENTS:

1. 2026.8.19_DRAFT_RES_WSBIPO2 JE
2. 2026.2.9_PSA_OR_WSB_CST PM_partially executed (1) (2)
3. IPO #2 - 1295 Form Signed_Redacted

RESOLUTION NO. R-2026-XXX

A RESOLUTION OF THE CITY OF HUTTO, TEXAS, AUTHORIZING INDIVIDUAL PROJECT ORDER #2 BETWEEN WSB, INC. AND THE CITY OF HUTTO IN THE AMOUNT OF $162,000 FOR PROFESSIONAL ENGINEERING SERVICES FOR OWNER REPRESENTATIVE SERVICES: AUTHORIZING THE CITY MANAGER TO EXECUTE INDIVIDUAL PROJECT ORDER; PROVIDING PROPER NOTICE & MEETING, AND PROVIDING AN EFFECTIVE DATE.

WHEREAS, the City Council desires to approve the Individual Project Order (IPO) #2 attached as Exhibit A and incorporated herein by reference, in the amount of $162,000.00, in accordance with the provisions of the Master Services Agreement for Professional Consulting Services executed between the City of Hutto and WSB, Inc.; and

WHEREAS, the IPO provides for Owner's Representative services for Construction Project Management on City of Hutto Capital Improvement Projects; and

WHEREAS, the City Council desires to authorize the City Manager to execute the IPO, attached as Exhibit A.

NOW, THEREFORE, BE IT RESOLVED BY THE CITY COUNCIL OF THE CITY OF HUTTO, TEXAS, THAT:

SECTION 1: The findings set forth in the recitals of this Resolution are hereby found to be true and correct and are hereby adopted as findings of the City Council and are incorporated into the body of this Resolution as if fully set forth herein.

SECTION 2: That the Hutto City Council hereby approves and authorizes the City Manager to execute the Individual Project Order, attached as Exhibit A, a copy of same being attached hereto and incorporated herein for all purposes.

SECTION 3: The City Council hereby finds and declares that written notice of the date, hour, place and subject of the meeting at which this Resolution was adopted was posted and that such meeting was open to the public as required by law at all times during which this Resolution and the subject matter hereof were discussed, considered and formally acted upon, all as required by the Open Meetings Act, Chapter 551, Texas Government Code, as amended.

SECTION 4: This Resolution shall take effect immediately upon its passage.

PASSED & APPROVED by the CITY COUNCIL of the CITY OF HUTTO, on the 3rd day of September 2026 on a vote of __AYES; ___NAYS; __ABSTENTIONS.

(Remainder of page intentionally left blank.)

CITY OF HUTTO, TEXAS:

_____

Mike Snyder, Mayor

ATTEST:

_____

Laura Hallmark, City Secretary

PROFESSIONAL SERVICES AGREEMENT

STATE OF TEXAS

COUNTY OF WILLIAMSON

CITY OF HUTTO

INDIVIDUAL PROJECT ORDER FOR THE

SERVICES OF OWNERS REPRESENTATIVE SERVICES

This Agreement is made and entered into in Hutto, Williamson County, Texas, between City of Hutto, a Municipal Corporation in the State of Texas (hereafter referred to as "City") and

WSB LLC

(hereafter referred to as "Consultant"), said Agreement being executed by City pursuant to City Charter, Ordinances and Resolutions of the Hutto City Council, and by Consultant for **OWNERS REPRESENTATIVE SERVICES** forth herein in connection with the above designated Project for City.

ARTICLE I DEFINITIONS;
INTERPRETIVE

As used in this Agreement, the following terms shall have meanings as set out below:

1.1 “Application for Compensation” means written form for a request from Consultant to be paid for completed work.

1.2 "City" means City of Hutto, Texas.

1.3 “Compensation” means amounts paid for services under this Agreement.

1.4 "Consultant" means WSB LLC and its officers, partners, employees, agents and representatives, and all Sub-Consultants, if any, as well as all other persons or entities for which Consultant legally is responsible.

1.5 "Director" means the Hutto City Manager or his/her designee.

1.6 "Owner Designated Representative (ODR)” means person designated by City to act for City.

1.7 "Plans and Specifications" means the construction documents.

1.8 "Project" means the specific Engineering Services work for which services are negotiated and executed by both Parties.

1.9 "Proposal" means Consultant's Proposal to provide services for this Project.

1.10 “Proposed Task Order Request” means a request to Consultant to submit a Proposal for a specific Project as further defined herein.

1.11 “AMSA” means the Austin Metropolitan Service Area or Relevant Marketplace, which collectively is comprised of Travis County and the five (5) surrounding counties of Burnet, Williamson, Bastrop, Caldwell, and Hays.

ARTICLE II
COMPENSATION

2.1 The Compensation for all services included in this Agreement and in the Scope of Services for this Agreement shall not exceed **ninety-five thousand DOLLARS, ($95,000.00).** The amount to be paid to Consultant, including authorized adjustments, is the total amount payable by City to Consultant for performance of the Services under this Agreement. It is agreed and understood that such amount will constitute full compensation to Consultant for Services included in the Scope of Services and shall meet all applicable requirements of City's Design Guidelines. All City compensation obligations to Consultant are subject to appropriation of funds by City Council.

2.2 **Reimbursable Expenses**. City's non-allowable reimbursement list. Only when and only to the extent that any such may be authorized by City in writing, the Consultant shall be entitled to reimbursement at actual incurred cost for services and related expenses for the following items, and for no other expenses:

2.2.1 Travel outside AMSA only if approved in writing by City prior to such travel. Reimbursement for travel costs will be limited to costs directly associated with Consultant's performance of Service under the Agreement. Travel costs are limited to the applicable mileage and per diem rates set annually by the Federal Government's General Services Administration. Consultant shall provide detailed receipts for all reimbursable charges. Travel expenses, if any, shall be negotiated with each Task Order issued. City does not pay for Consultant's travel within AMSA.

2.2.2 Mailing, courier services and copies of documents requested by City in writing in excess of the copies to be provided under Article IV of this Agreement. These costs, if any, shall not exceed the amount noted in Article IV herein, without further prior written approval of City. Consultant shall bear these costs. Except to the extent so approved.

2.2.3 Preparation, production, reproduction, and transmittal (except as provided in paragraph 2.2.2) of graphics, physical models, presentation boards requested by City in writing in excess of the hard copies to be provided under Article IV of this Agreement. These costs shall not exceed the amount noted in Article IV herein without prior written approval of City. Consultant shall bear these costs unless agreed to, except to the extent so approved.

2.2.4 City does not allow a markup on any of the above reimbursable items and only will reimburse approved hard costs incurred.

2.2.5 As an exception to the method for notice provided in Article XXIV, writings described in paragraph 2.2 may be transmitted via electronic mail to the parties' respective email addresses to be designated in an applicable Task Order.

2.2.6 Such other reimbursable services and/or expenses as may be expressly provided as being reimbursable in Individual Task Orders but only for the specific Project authorized by any such Task Order. Any such authorization shall not establish precedent, course of dealing, or other implied authorization for reimbursable items for any other Project.

Sub-Consultant Work. City will not pay a markup to Consultant for Sub-Consultant work.

ARTICLE III METHOD OF PAYMENT

3.1 Payments to Consultant shall be in the amount shown on the invoices and its supporting documentation submitted for work, including any materials, services and expenses, satisfactory to the City, and shall be subject to City's approval. All services shall be performed in accordance with the professional standard of care set forth in **Section 20.1** herein and to City's satisfaction, which satisfaction shall be judged by the Director in his/her sole discretion, and City shall not be liable for any payment under this Agreement for services which are unsatisfactory and which previously have not been approved by the Director. The final payment due hereunder will not be paid until all reports, data and documents have been submitted, received, accepted and approved by City.

3.1.1 Payment may be made based solely on the units of services completed and approved by City and the associated unit price for such service, as may be described in Compensation for Additional Professional Services (attached hereto, incorporated by reference herein and labeled as "**Exhibit 1"**).

3.1.2 Monthly payments for services performed in the various additional services will be reviewed by Director upon Consultant entering itemized invoices, with all required back-up, within the Portal. The invoice shall indicate the value of the additional services performed to date.

3.2 Consultant shall, within ten (10) days following receipt of Compensation from City, pay all bills for services performed and furnished by Sub-Consultants, in connection with the Project and the performance of the work, and shall provide City with evidence of such payment. Consultant's failure to make payments within such time shall constitute a material breach of this Agreement, unless Consultant is able to demonstrate to City bona fide disputes associated with the unpaid Sub-Consultant and its services. Consultant shall include a provision in each of its sub-agreements imposing the same payment obligations on the Sub-Consultants as are applicable to Consultant hereunder, and shall require Sub-Consultants to provide confirmation to City of receipt of payments. If Consultant has failed to make payment promptly to the Sub- Consultant for the Services for which City has made payment to Consultant, City shall be entitled to withhold payment to Consultant to the extent necessary to protect City except in the event of a valid dispute between Consultant and that Sub-Consultant.

3.3 Consultant warrants that title to all Services covered by an Application for Payment will pass to City no later than the time of payment. Consultant further warrants that, upon submittal of an Application for Compensation, all Services for which Applications for Compensation have been previously issued and payments received from City shall, to the best of Consultant's knowledge, information and belief, be free and clear of liens, claims, security interests or encumbrance in favor of Consultant or other persons or entities making a claim by reason of having provided labor or services relating to this Agreement. Consultant may submit a request for Partial Compensation prior to the completion of services. A request for Partial Compensation must be accompanied by a progress report detailing the Services performed. Any partial payment made shall be in proportion to the Services performed, as reflected in the progress report and approved by the Director and at City's sole discretion. Compensation also may be made based solely on the tasks and services completed and approved by City and the associated unit price for each Service/Project, as may be described in fee schedule and/or hourly rates included in "**Exhibit 1"** hereto.

3.4 Project Close Out and Final Payment:

3.4.1 Final billing shall indicate "Final Bill - no additional compensation is due to Consultant".

3.4.2 City may withhold compensation to such extent as may be necessary, in City's opinion, to protect City from damage or loss for which Consultant is responsible, because of:

3.4.2.1 delays in the performance of Consultant's work;

3.4.2.2 third-party claims filed or reasonable evidence indicating probable filing of such claims, unless security acceptable to City is provided by Consultant;

3.4.2.3 failure of Consultant to make payments properly to Sub-Consultants or vendors for labor, materials or equipment;

3.4.2.4 reasonable evidence that Consultant's work cannot be completed for the amount unpaid under this Agreement;

3.4.2.5 damage to City; or

3.4.2.6 persistent failure by Consultant to carry out the performance of its services in accordance with this Agreement.

3.4.3 When the above reasons for withholding are removed or remedied by Consultant, compensation of the amount withheld will be made within a reasonable time. City shall not be deemed in default by reason of withholding compensation as provided for in this **Article III**.

3.4.3.1 In the event of any dispute(s) between the parties, regarding the amount properly compensable for any Phase or as final compensation, or regarding any amount that may be withheld by City, Consultant shall be required to make a claim pursuant to and in accordance with the terms of this Agreement and follow the procedures provided herein for the resolution of such dispute. In the event Consultant does not initiate and follow the claims procedures provided in this Agreement in a timely manner and as required by the terms thereof, any such claim shall be waived.

3.4.3.2 City shall make final compensation of all sums due Consultant not more than thirty (30) days after Consultant's execution and delivery of a final Pay Application.

3.4.3.3 Request of final compensation by Consultant shall constitute a waiver of claims except those previously made in writing and identified by Consultant as unsettled at the time of final application for compensation.

3.4.3.4 Consultant agrees to maintain adequate books, payrolls and records satisfactory to City in connection with any and all Services performed hereunder. Consultant agrees to retain all such books, payrolls and records (including data stored in computer) for a period of not less than four (4) years after completion of Services. At all reasonable times, City and its duly authorized representatives shall have access to all personnel of Consultant and all such books, payrolls and records, and shall have the right to audit same.

ARTICLE IV
SCOPE OF SERVICES
[SUBJECT TO REVISION AS APPLICABLE]

4.1 Consultant agrees and acknowledged that City is entering into this Agreement in reliance on Consultant's represented expertise and special and unique abilities to provide the Services. Consultant accepts the relationship of trust and confidence established between it and City by this Agreement and covenants to use Consultant's best professional effort, skill, judgment, and abilities in performing the Services, and to further the interests of City in accordance with the usual and customary standards of care, skill and diligence of Consultant's profession, consistent with good professional design practices for firms that provide professional design services for projects that are similar in size, scope, budget to the Project, and in compliance with all Applicable Law. Consultant shall be solely responsible for the full cost of correcting any non-conforming Services, including any rendered by any others who have acted in reliance thereon.

4.2 Consultant shall provide Professional Services and include in its Scope of Services all associated services required such that the Project can be built, with any alternates, within the Project Construction Budget at or under the Construction Cost Limitation. By executing this Agreement, Consultant acknowledges receipt and comprehension of the Construction Cost Limitation. Consultant shall allocate adequate time, personnel and resources as necessary to perform the Services. Consultant shall perform the Services as expeditiously as is consistent with such professional skill and care and the orderly progress of the Project and in accordance with the standards set forth in Section 4.1.

4.3 Consultant shall comply with the standards of City's Design Guidance Manual throughout the duration of the subject Project and this Agreement, unless specifically and explicitly excluded from doing so in the approved Scope of Services attached hereto, incorporated by reference herein and labeled as "**Exhibit 3"** and as described in this **Article IV**.

4.4 Consultant shall adhere to the requirements of the design phases described in City's design

Guidance Manual, to include performing the tasks and submitting deliverables as described therein, unless specifically and explicitly excluded in the approved Scope of Service in **"Exhibit 3"** hereto and as described in this **Article IV.**

4.5 Consultant acknowledges and accepts its responsibilities as defined and described in City's General Conditions, attached hereto, incorporated by reference herein and labeled as "**Exhibit 4"**.

4.6 Consultant shall provide all labor, equipment and transportation necessary to complete all services agreed to hereunder in a timely manner throughout the term of the Contract. Additionally, Consultant shall provide staff for regular, overtime, night, weekend and holiday service, as requested by City. Persons retained by Consultant to perform work pursuant to this Agreement shall be employees or subcontractors of Consultant.

4.7 Consultant shall not commence service on any Task Order authorized under this Agreement until being thoroughly briefed on the scope of the project and being notified in writing to proceed. Should the scope subsequently change, either Consultant or City may request a review of the anticipated services, with an appropriate adjustment in compensation.

4.8 Consultant, in consideration for the compensation herein described, shall render the professional services described in this **Section IV** necessary for the advancement of the Project through Substantial Completion to Final Completion.

4.9 Consultant shall perform its obligations under this Agreement in accordance with the Scope of Services outlined herein and in accordance with the Compensation for Additional Professional Services, attached and incorporated herein and labeled as **"Exhibit 3"**. The Scope of Services fully shall be described in Consultant's Proposal, as revised in accordance with negotiations with and approval by City for each authorized service task and as provided in this Agreement.

4.10 Compensation for Additional Professional Services, which includes pre-priced tasks and/or hourly rates, is described in **"Exhibit 1"** hereto.

ARTICLE V
TIME AND PERIOD OF SERVICE

5.1 The term of this Agreement shall commence upon its approval by the Hutto City Council and its execution by both parties.

5.2 Time is of the essence for this Agreement. Consultant shall perform and complete its obligations for the services under **Article IV** herein in a prompt and continuous manner, so as to not delay the development of services and so as to not delay the construction of the work for the Project, in accordance with the schedules approved by City. City will perform its obligations of review and approval in a prompt and continuous manner so as to not delay the project.

5.3 Consultant shall not be liable or responsible for any delays due to strikes, riots, acts of God, national emergency, acts of the public enemy, governmental restrictions, laws or regulations, or any other causes beyond Consultant's reasonable control. Within twenty-one (21) days from the occurrence of any event, for which time for performance by Consultant shall be significantly

extended under this provision, Consultant shall give written notice thereof to City stating the reason for such extension and the actual or estimated time thereof. If City determines that Consultant is responsible for the need for extended time, City shall have the right to make a Claim as provided in this Agreement.

5.4 This Agreement shall remain in force for a period which may reasonably be required for the design, award of the contract and the completion of the Project, including any extra work and any required extensions thereto, unless terminated, as provided for elsewhere in this Agreement.

ARTICLE VI
(RESERVED)

ARTICLE VII
COORDINATION WITH CITY

7.1 Consultant shall hold periodic conferences with City through the end of the Project. The Project shall have the full benefit of City's experience and knowledge of existing needs and facilities and be consistent with City's current policies and standards. To assist Consultant in this coordination, City shall make available, for Consultant's use in planning and designing the Project, all existing plans, maps, statistics, computations and other data in City's possession, relative to existing facilities and to this particular Project, at no cost to Consultant. However, any and all such information shall remain the property of City and shall be returned by Consultant to City upon termination or the completion of the Project or if instructed to do so by the Director.

7.2 The Director or his/her representative shall act on behalf of City, with respect to the services to be performed under this Agreement. The Director shall have complete authority to transmit instructions, receive information and interpret and define City's policies and decisions, with respect to materials, equipment, elements and systems pertinent to Consultant's services.

7.3 City promptly will give written notice to Consultant whenever City observes, discovers or otherwise becomes aware of any defect in Consultant's services, or any development that affects the scope or timing of Consultant's services.

7.4 Unless otherwise required by City, City shall furnish approvals and permits from all governmental authorities having jurisdiction over the Project and other such approvals and consents from others, as may be necessary, for the completion of the Project. Consultant will provide City reasonable assistance in connection with such approvals and permits, such as the furnishing of data compiled by Consultant pursuant to other provisions of the Agreement, but Consultant shall not be obligated to develop additional data, prepare extensive reports or appear at hearings or the like unless compensated therefore under other provisions of this Agreement.

ARTICLE VIII
REVISIONS TO DOCUMENTS

Consultant shall make, without expense to City, such revisions to the drawings, reports or other documents, as may be required to meet the needs of City and which are within its Scope of Services. After the approval of reports or other documents by City, any revisions, additions or other modifications made at City's request, which involve extra services and expenses incurred by Consultant, only shall be requested through an additional Amendment and Task Order for services.

ARTICLE IX
OWNERSHIP OF DOCUMENTS

9.1 All documents, including the original drawings, estimates, specifications and all other documents and data, previously owned by Consultant, shall remain the property of Consultant as instruments of service. However, it is to be understood that City shall have free access to all such information and hold the right to make and retain copies of drawings, estimates, specifications and all other documents and data. Any reuse, without specific written verification or adaptation by Consultant, will be at City's sole risk and without liability or legal exposure to Consultant.

9.2 Consultant acknowledges and agrees that upon payment City exclusively shall own any and all information in whatsoever form and character produced and/or maintained in accordance with, pursuant to or as a result of this Agreement and said information shall be used as City desires. Any and all documents, including the original drawings, estimates, specifications and all other documents and data, shall be delivered to City at no additional cost to City, upon request, termination or completion of this Agreement without restriction on future use.

9.3 Consultant agrees and covenants to protect any and all proprietary rights of City in any materials provided to Consultant. Such protection of proprietary rights by Consultant shall include, but not be limited to, the inclusion in any copy intended for publication of copyright mark reserving all rights to City. Additionally, any materials provided to Consultant by City shall not be released to any third party without the consent of City and shall be returned intact to City upon termination or completion of this Agreement or if instructed to do so by the Director.

9.4 Consultant hereby assigns all statutory and common law copyrights to any copyrightable work that, in part or in whole, was produced from this Agreement is the property of City, including all equitable rights. No reports, maps, documents or other copyrightable works, produced in whole or in part by this Agreement, shall be subject of an application for copyright by Consultant. All reports, maps, project logos, drawings or other copyrightable work produced under this Agreement shall become the property of City (excluding any instrument of services, unless otherwise specified herein). Consultant shall, at its own expense, defend all suits or proceedings instituted against City and pay any award of damages or loss resulting from an injunction against City, insofar as the same are based on any claim that materials or work provided under this Agreement constitute an infringement of any patent, trade secret, trademark, copyright or other intellectual property rights.

9.5 Consultant may make copies of any and all documents and items for its files. Consultant shall have no liability for changes made to or use of the drawings, specifications and other documents by other engineers or other persons, subsequent to the completion of the Project. City requires that Consultant appropriately mark all changes or modifications on all drawings, specifications and other documents by other Engineers or other persons, including electronic copies, subsequent to the Final Completion of the Project. Following Final Completion of the Project, if City requests Consultant perform additional scope beyond that listed in "**Exhibit 3"** hereto, City will appropriately compensated for such work performed by Consultant.

9.6 Copies of documents, which may be relied upon by City, are limited to the printed copies (also known as hard copies) and PDF electronic versions that are sealed and signed by Consultant. Files in editable electronic media format of text, data, graphics or other types, (such as DWG or DGN) that are furnished by Consultant to City or utility only are for convenience of City or utility. Any conclusion or information obtained or derived from such electronic files will be at the user's sole risk.

9.7 Notwithstanding anything to the contrary contained herein, all previously owned intellectual property of Consultant, including but not limited to, any computer software (object code and source code), tools, systems, equipment or other information used by Consultant or its suppliers in the course of delivering the Services hereunder, and any know-how, methodologies or processes used by Consultant, to provide the services or protect deliverables to City, including without limitation, all copyrights, trademarks, patents, trade secrets and any other proprietary rights inherent therein and appurtenant thereto, shall remain the sole and exclusive property of Consultant or its suppliers.

ARTICLE X
TERMINATION AND/OR SUSPENSION OF SERVICES

10.1 Right of Either Party to Terminate for Default

10.1.1 This Agreement may be terminated by either party for substantial failure by the other party to perform, through no fault of the terminating party, in accordance with the terms of this Agreement and a failure to cure as provided in this **Article X**.

10.1.2 The party not in default must issue a written and signed Notice of Termination, citing this **Paragraph 10.1.2**, to the other party declaring the other party to be in default and stating the reason(s) why it is in default. Upon receipt of such written Notice of Default, the party in receipt shall have a period of ten (10) calendar days to cure any failure to perform under this Agreement. Upon the completion of said ten-day period, commencing upon receipt of Notice of Termination, if such party has not cured any failure to perform, such termination shall become effective without further written notice.

10.2 **Right of City to Terminate**. City reserves the right to terminate this Agreement, for reasons other than substantial failure by Consultant to perform, by issuing a signed Notice of Termination, citing this **Paragraph 10.2**, which shall take effect on the twentieth (20th) calendar day following receipt of said notice and upon the scheduled completion date of the performance phase in which Consultant then currently is working, whichever effective termination date occurs first.

10.3 Right of City to Suspend Giving Rise to Right of Consultant to Terminate

10.3.1 City reserves the right to suspend this Agreement at the end of any phase for the convenience of City by issuing a written and signed Notice of Suspension, citing this **Paragraph 10.3.1**, which shall outline the reasons for the suspension and the expected duration of the suspension, but such expected duration shall, in no way, guarantee what the total number of days of suspension will occur. Such suspension shall take effect immediately upon receipt of said Notice of Suspension by the Consultant.

10.3.2 Consultant hereby is given the right to terminate this Agreement in the event such suspension extends for a period in excess of one hundred twenty (120) calendar days. Consultant may exercise this right to terminate by issuing a signed, written Notice of Termination, citing this **Paragraph 10.3.2**, to City after the expiration of one hundred twenty (120) calendar days from the effective date of the suspension. Termination, pursuant to this **Paragraph 10.3.2**, shall become effective immediately upon receipt of said written notice by City.

10.4 Procedures Consultant to follow upon Receipt of Notice of Termination

10.4.1 Upon receipt of a Notice of Termination and prior to the effective date of termination, unless the notice otherwise directs or Consultant immediately takes action to cure a failure to perform under the cure period set out hereinabove, Consultant immediately shall begin the phase-out and the discontinuance of all services, in connection with the performance of this Agreement, and shall proceed promptly to cancel all existing orders and contracts insofar as such orders and contracts are chargeable to this Agreement. Within thirty (30) calendar days after receipt of such Notice of Termination, unless Consultant successfully has cured a failure to perform, Consultant shall submit a statement showing in detail the services performed under this Agreement prior to the effective date of termination. City retains the option to grant an extension to the time period for submittal of such statement.

10.4.2 Copies of all completed or partially completed specifications and all reproductions of all completed or partially completed designs, plans and exhibits prepared under this Agreement, prior to the effective date of termination, shall be delivered to City, in the form requested by City, as a pre-condition to final payment. These documents shall be subject to the restrictions and conditions set forth in **Article IX** herein.

10.4.3 Upon the above conditions being met, absent any reason why City may be compelled to withhold fees, City promptly shall pay Consultant that proportion of the prescribed fee which the services actually performed under this Agreement bear to the total services called for under this Agreement, less any previous payments of the fee.

10.4.4 City, as a public entity, has a duty to document the expenditure of public funds. Consultant acknowledges this duty imposed upon City. Consultant further acknowledges that the failure of Consultant to comply with the submittal of the statement and documents, as required above, shall constitute a waiver by Consultant of any and all rights or claims to payment for services performed under this Agreement by Consultant.

10.4.5 Failure of Consultant to comply with the submittal of the statement and documents, as required above, shall constitute a waiver by Consultant of any and all rights or claims to collect monies that Consultant otherwise may be entitled to for services performed under this Agreement.

10.5 Procedures Consultant to Follow upon Receipt of Notice of Suspension

10.5.1 Upon receipt of written Notice of Suspension, which date also shall be the effective date of the suspension, Consultant shall, unless the Notice otherwise directs, immediately begin to phase-out and discontinue all services in connection with the performance of this Agreement and promptly shall proceed to suspend all existing orders and contracts, insofar as such orders and contracts are chargeable to this Agreement.

10.5.2 Consultant shall prepare a statement showing, in detail, the services performed under this Agreement prior to the effective date of suspension.

10.5.3 Copies of all completed or partially completed designs, plans and specifications, prepared under this Agreement prior to the effective date of suspension, shall be prepared for possible delivery to City but shall be retained by Consultant until such time as Consultant may exercise the right to terminate.

10.5.4 In the event that Consultant exercises the right to terminate one hundred twenty (120) calendar days after the effective suspension date, within thirty (30) calendar days after receipt by City of Consultant's Notice of Termination, Consultant promptly shall cancel all existing orders and contracts, insofar as such orders and contracts are chargeable to this Agreement, and shall submit the above referenced statement showing, in detail, the services performed under this Agreement prior to the effective date of suspension.

10.5.5 Any documents prepared in association with this Agreement shall be delivered to City as a pre-condition to final payment.

10.5.6 Upon the above conditions being met, absent any reason why City may be compelled to withhold fees, City promptly shall pay Consultant that proportion of the prescribed fee which the services actually performed under this Agreement bear to the total services called for under this Agreement, less any previous payments of the fee.

10.5.7 City, as a public entity, has a duty to document the expenditure of public funds.

10.5.8 Consultant acknowledges this duty imposed upon City. Consultant further acknowledges that the failure of Consultant substantially to comply with the submittal of the statements and documents, as required herein, shall constitute a waiver by Consultant of any portion of the fee for which Consultant did not supply such necessary statements and/or documents.

ARTICLE XI
CONSULTANT'S WARRANTY

Consultant warrants that the services required under this Agreement will be performed with the same degree of professional skill and care that typically are exercised by similar consulting professionals performing similar services in Williamson County, Texas. Consultant further warrants that it has not employed or retained any company or person other than a bona fide employee, working solely for Consultant, to solicit or secure this Agreement, and that it has not, for the purpose of soliciting or securing this Agreement, paid or agreed to pay any company or person a commission, percentage, brokerage fee, gift or any other consideration, contingent upon or resulting from the award or making of this Agreement. For breach of this warranty, City shall have the right to terminate this Agreement under the provisions of **Article X** herein.

ARTICLE XIII
ASSIGNMENT OR TRANSFER OF INTEREST

Consultant shall not assign or transfer Consultant's interest in this Agreement without the written consent of City.

ARTICLE XIV
INSURANCE REQUIREMENTS

14.1 Prior to the commencement of any work under this Agreement, Consultant shall furnish copies of all required endorsements and completed Certificate(s) of Insurance to the City Manager. The Certificate(s) shall be completed and signed by an agent authorized by that insurer to bind coverage on its behalf. City will not accept a Memorandum of Insurance or Binder as proof of insurance. The certificate(s) must have the agent's signature and phone number and be mailed, with copies of all applicable endorsements, directly from the insurer's authorized representative to City. City shall have no duty to pay or perform under this Agreement until such certificate and endorsements have been received and approved by City.

14.2 City reserves the right to review the insurance requirements of this **Article XIV** during the effective period of this Agreement and any extension or renewal hereof and to request the modification of insurance coverage and limits when deemed necessary and prudent by City's Risk Manager, based upon changes in statutory law, court decisions or circumstances surrounding this Agreement. In no instance will City allow modification whereby City may incur increased risk.

14.3 Consultant's financial integrity is of interest to City; therefore, subject to Consultant's obligation to maintain reasonable deductibles in such amounts as are approved by Consultant's insurance companies, Consultant shall obtain and maintain in full force and effect for the duration of this Agreement and any extension hereof at Consultant's sole expense, insurance coverage written on an occurrence basis, unless otherwise indicated, by companies authorized to do business in the State of Texas and with an A.M Best's rating of no less than A- (VII), in the following types and for an amount not less than the amount listed below. These listed insurance limits are standard limits for all City projects. If a project does not justify these standard limits of insurance coverages, Consultant may request a review of the City's insurance requirements, to be considered on a project-by-project basis:

TYPE	AMOUNTS
1. Workers Compensation	Statutory
2. Employer's Liability	$1,000,000
3. Commercial General Liability Insurance to include coverage for the following: a. Premises/Operation b. Independent Contractors c. Products/Completed Operations d. Personal Injury e. Contractual Liability f. Environmental Impairment/Impact – sufficiently broad to cover disposal liability g. Explosion, Collapse, Underground h. Damage to property rented by you	For Bodily and Property Damage of $1,000,000 per occurrence; $1,000,000 General Aggregate, or its equivalent in Umbrella or Excess Liability Coverage h. $100,000
4. Business Automobile Liability a. Owned/Leased vehicles b. Non-owned vehicles c. Hired vehicles	Combined Single Limit for Bodily Injury and Property Damage of $1,000,000 per occurrence
5. Professional Liability (Claims-made basis) To be maintained and in effect for no less than two years subsequent to the completion of the professional service.	$1,000,000 per claim, to pay on behalf of the insured all sums which the insured shall become legally obligated to pay as damages to the extent caused by any negligent act, terror, or omission in performance of professional services.

City may request, and without expense to City, to inspect copies of Consultant's policies and endorsements as they apply to the limits and forms required by City.

14.4 Consultant agrees to require, by written contract, that all Sub-Consultants and/or Subcontractors providing goods or services hereunder obtain the same insurance coverage required of Consultant herein, and provide a certificate of insurance and endorsement that names Consultant and City as additional insureds. Consultant shall provide City with said certificate and endorsement prior to the commencement of any work by any Sub-Consultant and/or Subcontractor. This provision may be modified by City's Risk Manager, without subsequent City Council approval, when deemed necessary and prudent, based upon changes in statutory law, court decisions or circumstances surrounding this Agreement. Such modification may be enacted by letter signed by City's Risk Manager, which shall become a part of the contract for all purposes.

14.5 If City requests a copy/copies of an insurance policy, Consultant prominently shall comply and Consultant shall mark those portions of the policy, if any, Consultant regards as confidential. In the event a third party makes an Open Records Request under the Texas Open Records Act or other public information law asking to view or copy Consultant's policy, City shall submit the received request, along with Consultant's information to the Texas Attorney General (hereafter referred to as "AG") for an opinion regarding the release of Consultant's policy information. Consultant and City agree that City will be bound by the AG opinion/decision. Similarly, Consultant agrees and accepts City will provide all Consultant information pursuant to a court order or a litigation discovery rule requiring or directing City To disclose any of Consultant's information.

14.6 Consultant agrees, with respect to the above required insurance, all insurance policies are to contain or be endorsed to contain the following provisions, to the extent permitted by policy provisions, to the extent permitted by policy provisions, terms and conditions:

- Name City, its officers, officials, employees, volunteers, and elected representatives as additional insureds by endorsement or within policy provisions, terms or conditions, with respect to operations and activities of, or on behalf of, the named insured performed under contract with City, with the exception of the workers' compensation and professional liability policies;

- Provide for an endorsement that the "other insurance" clause shall not apply to the City of Hutto where City is an additional insured shown on the policy, as allowed by respective policy provisions, terms and conditions;

- Workers' compensation, employers' liability, general liability and automobile liability policies will provide a waiver of subrogation in favor of City; and

- Where allowed by respective policy provisions, terms and conditions, provide thirty (30) calendar days advance written notice to City of any cancellation or non-renewal or material change in coverage, any change in policy limits by endorsement and not less than ten (10) calendar days advance notice for nonpayment of premium.

14.8 Within ten (10) calendar days of notice to Consultant of a cancellation or non-renewal of coverage, Consultant shall provide a replacement Certificate of Insurance and applicable endorsements to City. City shall have the option to suspend Consultant's performance, should there be a lapse in coverage at any time during this contract. Failure to provide and to maintain the required insurance shall constitute a material breach of this Agreement.

14.9 In addition to any other remedies City may have upon Consultant's failure to provide and maintain any insurance or policy endorsements, to the extent and within the time herein required, City shall have the right to order Consultant to stop work hereunder until Consultant demonstrates compliance with the requirements hereof.

14.10 Nothing herein contained shall be construed as limiting in any way the extent to which Consultant may be held responsible for payments of damages to persons or property resulting from Consultant's or its Sub-Consultants' and/or Subcontractors' performance of the work covered under this Agreement.

14.11 It is agreed that Consultant's insurance shall be deemed primary and non-contributory, with respect to any insurance or self-insurance carried by the City of Hutto, for liability arising out of operations under this Agreement.

14.12 It is understood and agreed that the insurance required is in addition to and separate from any other obligation contained in this Agreement and that no claim or action by or on behalf of City shall be limited to insurance coverage provided.

14.13 Consultant and any Sub-Consultants and/or Subcontractors are responsible for all damage to their own equipment and/or property.

ARTICLE XV
INDEMNIFICATION

15.1 Consultant, whose professional services are the subject of this Agreement, covenants and agrees to FULLY INDEMNIFY and HOLD HARMLESS, City and the elected officials, employees, officers, directors, volunteers and representatives of City, individually and collectively, from and against damages, liabilities or costs, including reasonable attorney fee and defense costs, to the extent caused by Consultant's negligent performance of professional services under this Agreement and anyone for whom Consultant legally or contractually is liable. The indemnity provided for in this Section 15.1 shall not apply to any liability resulting from the negligence of City, its officers or employees, in instances where such negligence causes personal injury, death or property damage. IN THE EVENT CONSULTANT AND CITY ARE FOUND JOINTLY LIABLE BY A COURT OF COMPETENT JURISDICTION, LIABILITY SHALL BE APPORTIONED COMPARATIVELY IN ACCORDANCE WITH THE LAWS FOR THE STATE OF TEXAS, WITHOUT, HOWEVER, WAIVING ANY GOVERNMENTAL IMMUNITY AVAILABLE TO THE CITY UNDER TEXAS LAW AND WITHOUT WAIVING ANY DEFENSES OF THE PARTIES UNDER TEXAS LAW.

15.2 The provisions of this Article XV solely are for the benefit of the parties hereto and not intended to create or grant any rights, contractual or otherwise, to any other person or entity. Consultant shall advise City in writing within twenty-four (24) hours of any claim or demand against City or Consultant known to Consultant related to or arising out of Consultant's activities under this Agreement and shall see to the investigation and defense of such claim or demand at Consultant's cost. City shall have the right, at its option and at its own expense, to participate in such defense without relieving Consultant of any of its obligations under this Section XV.

ARTICLE XVI
CLAIMS AND DISPUTES

16.1 **Definition.** A Claim is a demand or assertion by one of the parties hereto seeking, as a matter of right, adjustment or interpretation of an Agreement's terms, payment of money, extension of time or other relief, with respect to the terms of the Agreement. The term "Claim" also includes other disputes and matters in question arising out of or relating to this Agreement. Claims must be initiated by written notice. Every Claim of Consultant, whether for additional compensation, additional time or other relief, shall be signed and sworn to by an authorized corporate officer (if Consultant is not a corporation, then an official of the company authorized to bind Consultant by his/her signature) of Consultant, verifying the truth and accuracy of the Claim. The responsibility to substantiate Claims shall rest with the party making the Claim.

16.2 **Time Limit on Claims.** Claims by Consultant must be initiated in writing to City within twenty-one (21) calendar days after the occurrence of the event giving rise to such Claim.

16.3 **Continuing Contract Performance.** Pending final resolution of a Claim, except as otherwise agreed in writing, Consultant shall proceed diligently with performance of the Agreement and City shall continue to make payments in accordance with this Agreement.

16.4 **Claims for Additional Time.** If Consultant wishes to make a Claim for an increase in the time for performance, written notice, as stated in this **Section XVI**, must be given. Consultant's Claim shall include an estimate of probable effect of delay on progress of the Work. In the case of a continuing delay, only one Claim is necessary.

16.5 **Claims for Consequential Damages**. Except as otherwise provided in this Agreement, in calculating the amount of any Claim or any measure of damages for breach of contract (such provision to survive any termination following such breach), the following standards will apply both to claims by Consultant and to claims by City:

16.5.1 No consequential damages will be allowed; and

16.5.2 Damages are limited to extra costs specifically shown to have been directly caused by a proven wrong for which the other party is claimed to be responsible; and

16.5.3 No profit will be allowed on any damage claim.

16.6 **No Waiver of Governmental Immunity. NOTHING IN THIS SECTION XVI SHALL BE CONSTRUED TO WAIVE CITY'S GOVERNMENTAL IMMUNITY FROM LAWSUIT, WHICH IMMUNITY IS EXPRESSLY RETAINED TO THE EXTENT IT IS NOT CLEARLY AND UNAMBIGUOUSLY WAIVED BY STATE LAW.**

16.7 Alternative Dispute Resolution.

16.7.1 **Continuation of Services Pending Dispute Resolution.** Each party is required to continue to perform its obligations under this Agreement, pending a final resolution of any dispute arising out of or relating to this Agreement, unless it would be impossible or impracticable under the circumstances

16.7.2 **Requirement for Senior Level Negotiations.** Before invoking mediation or any other alternative dispute process set forth herein, the parties agree that they first shall try to resolve any dispute arising out of or related to this Agreement through discussions directly between those senior management representatives within their respective organizations who have overall managerial responsibility for similar projects. This step shall be a condition precedent to use of any other alternative dispute resolution process. If the parties' senior management representatives cannot resolve the dispute within thirty (30) calendar days, after a party delivers a written notice of such dispute, then the parties shall proceed with the mediation alternative dispute resolution process contained herein. All negotiations pursuant to this clause are confidential and shall be treated as compromise and settlement negotiations for purposes of applicable rules of evidence.

16.7.3 Mediation.

16.7.3.1 In the event that City or Consultant shall contend that the other has committed a material breach of this Agreement, the party alleging such breach shall, as a condition precedent to filing any lawsuit, request mediation of the dispute.

16.7.3.2 Request for mediation shall be in writing, and shall request that the mediation commence not less than thirty (30) or more than ninety (90) calendar days following the date of the request, except upon agreement of both parties.

16.7.3.3 In the event City and Consultant are unable to agree to a date for the mediation or to the identity of the mediator or mediators within 30 calendar days following the date of the request for mediation, all conditions precedent in this **Article XVI** shall be deemed to have occurred.

16.7.3.4 The parties shall share the mediator's fee and any filing fees equally. Venue for any mediation or lawsuit arising under this Agreement shall be in Williamson County, Texas. Any agreement reached in mediation shall be enforceable as a settlement agreement in any court having jurisdiction thereof. No provision of this Agreement shall waive any immunity or defense. No provision of this Agreement is a consent to suit.

ARTICLE XVII
SEVERABILITY

If, for any reason, any one or more Articles and/or paragraphs of this Agreement are held invalid or unenforceable, such invalidity or unenforceability shall not affect, impair or invalidate the remaining Articles and/or paragraphs of this Agreement but shall be confined in its effect to the specific Article, sentences, clauses or parts of this Agreement held invalid or unenforceable, and the invalidity or unenforceability of any Article, sentence, clause or parts of this Agreement, in any one or more instance, shall not affect or prejudice in any way the validity of this Agreement in any other instance.

ARTICLE XVIII
INTEREST IN CITY CONTRACTS PROHIBITED

18.1 No officer or employee of City shall have a financial interest, directly or indirectly, in any contract with City or shall be financially interested, directly or indirectly, in the sale to City of any land, materials, supplies or service, except on behalf of City as an officer or employee. This prohibition extends to City's Public Service Board, SAWS and other City boards and commissions, which are more than purely advisory. The prohibition also applies to Sub-Contracts on City projects.

18.2 Consultant acknowledges that it is informed that the Charter of City and its Ethics Code prohibit a City officer or employee, as those terms are defined in the Ethics Code, from having a financial interest in any contract with City or any City agency, such as City-owned utilities. Consultant's officer or employee has a "prohibited financial interest" in a contract with City or in the sale to City of land, materials, supplies or service, if any of the following individual(s) or entities is a party to the contract or sale: a. a City officer or employee; b. a City officer or employee's parent, child or spouse; c. a business entity in which City officer or employee, or the officer or employee's parent, child or spouse, owns ten percent (10%) or more of the voting stock or shares of the business entity, or ten percent (10)%) or more of the fair market value of the business entity; d. a business entity in which any individual or entity above listed is a subcontractor on a City contract, a partner or a parent or subsidiary business entity.

18.3 Consultant warrants and certifies, and this Agreement is made in reliance thereon, that Consultant, its officers, employees and agents are neither officers nor employees of City. Consultant further warrants and certifies that is has tendered to City a Discretionary Contracts Disclosure Statement in compliance with City's Ethics Code.

ARTICLE XIX
CONFLICT OF INTEREST

19.1 Consultant acknowledges that it is informed that the Charter of the City of Hutto and its Ethics Code prohibit a City officer or employee, as those terms are defined in the Ethics Code, from having a direct interest in any contract with the City.

19.2 Pursuant to the subsection above, Consultant warrants and certifies, and this Agreement is made in reliance thereon, that it, its officers, employees, and agents are neither officers nor employees of the City and shall not have a direct interest in the Agreement. Consultant further warrants and certifies that it will comply with the City's Ethics Code.

19.3 **HB 1295 Certificate of Interested Parties (TEC Form 1295).** For contracts needing City Council approval, or any subsequent changes thereto requiring City Council approval, the City may not accept or enter into a contract until it has received from the Consultant a completed, signed, and notarized TEC Form 1295 complete with a certificate number assigned by the Texas Ethics Commission ("TEC"), pursuant to Texas Government Code § 2252.908 and the rules promulgated thereunder by the TEC. The Consultant understands that failure to provide said form complete with a certificate number assigned by the TEC may prohibit the City from entering into this Agreement. Pursuant to the rules prescribed by the TEC, the TEC Form 1295 must be completed online through the TEC's website, assigned a certificate number, printed, signed, and notarized, and provided to the

City. The TEC Form 1295 must be provided to the City prior to the award of the contract. The City does not have the ability to verify the information included in a TEC Form 1295, and does not have an obligation or undertake responsibility for advising Consultant with respect to the proper completion of the TEC Form 1295.

19.4 **No Boycott of Israel; No Terrorist Organization.**

Pursuant to Section 2270.002, Texas Government Code, the CONSULTANT hereby represents that it and its parent company, wholly- or majority-owned subsidiaries, and other affiliates, if any, do not boycott Israel and, to the extent this Indenture is a contract for goods or services, will not boycott Israel during the term of this Indenture. The foregoing verification is made solely to comply with Section 2270.002, Texas Government Code, and to the extent such Section does not contravene applicable Federal law. As used in the foregoing verification, "boycott Israel" means refusing to deal with, terminating business activities with, or otherwise taking any action that is intended to penalize, inflict economic harm on, or limit commercial relations specifically with Israel, or with a person or entity doing business in Israel or in an Israeli-controlled territory, but does not include an action made for ordinary business purposes.

The CONSULTANT understands "affiliate" to mean an entity that controls, is controlled by, or is under common control with the CONSULTANT and exists to make a profit.

Pursuant to Subchapter F, Chapter 2252, Texas Government Code, the CONSULTANT represents that neither it nor any of its parent company, wholly- or majority-owned subsidiaries, and other affiliates is a company identified on a list prepared and maintained by the Texas Comptroller of Public Accounts under Section 2252.153 or Section 2270.0201, Texas Government Code, and posted on any of the following pages of such officer's internet website:

https://comptroller.texas.gov/purchasing/docs/sudan-list.pdf,
https://comptroller.texas.gov/purchasing/docs/iran-list.pdf, or
https://comptroller.texas.gov/purchasing/docs/fto-list.pdf.

The foregoing representation is made solely to comply with Section 2252.152, Texas Government Code, and to the extent such Section does not contravene applicable Federal law and excludes the CONSULTANT and each of its parent company, wholly- or majority-owned subsidiaries, and other affiliates, if any, that the United States government has affirmatively declared to be excluded from its federal sanctions regime relating to Sudan or Iran or any federal sanctions regime relating to a foreign terrorist organization. The CONSULTANT understands "affiliate" to mean any entity that controls, is controlled by, or is under common control with the CONSULTANT and exists to make a profit.

19.5 **Verification Regarding Energy Company Boycotts.**

To the extent this Agreement constitutes a contract for goods or services for which a written verification is required under Section 2274.002, Texas Government Code, (as added by Senate Bill 13, 87th Texas Legislature, Regular Session) as amended, the CONSULTANT hereby verifies that it and its parent company, wholly- or majority- owned subsidiaries, and other

affiliates, if any, do not boycott energy companies and, will not boycott energy companies during the term of this Agreement. The foregoing verification is made solely to comply with Section 2274.002, Texas Government Code, as amended, to the extent Section 2274.002, Texas Government Code does not contravene applicable Texas or federal law. As used in the foregoing verification, "boycott energy companies" shall have the meaning assigned to the term "boycott energy company" in Section 809.001, Texas Government Code. The CONSULTANT understands "affiliate" to mean an entity that controls, is controlled by, or is under common control with the CONSULTANT and exists to make a profit.

19.6 **Verification Regarding Discrimination Against Firearm Entity or Trade Association.**

To the extent this Agreement constitutes a contract for the purchase of goods or services for which a written verification is required under Section 2274.002, Texas Government Code, (as added by Senate Bill 19, 87th Texas Legislature, Regular Session, "SB 19"), as amended, the hereby verifies that it and its parent company, wholly- or majority- owned subsidiaries, and other affiliates, if any,

(1) do not have a practice, policy, guidance, or directive that discriminates against a firearm entity or firearm trade association; and
(2) will not discriminate during the term of this Agreement against a firearm entity or firearm trade association.

The foregoing verification is made solely to comply with Section 2274.002, Texas Government Code, as amended, to the extent Section 2274.002, Texas Government Code does not contravene applicable Texas or federal law. As used in the foregoing verification, "discriminate against a firearm entity or firearm trade association" shall have the meaning assigned to such term in Section 2274.001(3), Texas Government Code (as added by SB 19). The CONSULTANT understands "affiliate" to mean an entity that controls, is controlled by, or is under common control with the CONSULTANT and exists to make a profit.

ARTICLE XX
STANDARD OF CARE/LICENSING

20.1 Services provided by Consultant under this Agreement shall be performed in a manner consistent with that degree of care and skill ordinarily exercised by members of the same profession currently practicing under similar circumstances.

20.2 Consultant shall be represented by personnel with appropriate certification(s) at meetings of any official nature concerning the Project, including but not limited to scope meetings, review meetings, pre-bid meetings and preconstruction meetings.

ARTICLE XXI
RIGHT OF REVIEW AND AUDIT

21.1 Consultant grants City, or its designees, the right to audit, examine or inspect, at City's election, all of Consultant's records relating to the performance of the Work under this Agreement, during the term of this Agreement and retention period herein. The audit, examination or inspection may be performed by a City designee, which may include its internal auditors or an outside representative engaged by City. Consultant agrees to retain its records for a minimum of four (4) years following termination of the Agreement, unless there is an ongoing dispute under the contract, then, such retention period shall extend until final resolution of the dispute. "Consultant's records" include any and all information, materials and data of every kind and character generated as a result of the work under this Agreement. Example of Consultant records include, but are not limited to, billings, books, general ledger, cost ledgers, invoices, production sheets, documents, correspondence, meeting notes, subscriptions, agreements, purchase orders, leases, contracts, commitments, arrangements, notes, daily diaries, reports, drawings, receipts, vouchers, memoranda, time sheets, payroll records, policies, procedures, federal and state tax filings for issue in question and any and all other agreements, sources of information and matters that may, in City's judgment, have any bearing on or pertain to any matters, rights, duties or obligations under or covered by any Agreement Documents.

21.2 City agrees that it will exercise the right to audit, examine or inspect Consultant’s records only during City’s regular business hours. Consultant agrees to allow City's designee access to all of Consultant's Records, Consultant's facilities and current or former employees of Consultant, deemed necessary by City or its designee(s), to perform such audit, inspection or examination. Consultant also agrees to provide adequate and appropriate work space necessary to City or its designees to conduct such audits, inspections or examinations.

21.3 Consultant must include this audit clause in any subcontractor, supplier or vendor contract.

ARTICLE XXII
ENTIRE AGREEMENT

This Agreement represents the entire and integrated Agreement between City and Consultant and supersedes all prior negotiations, representations or agreements, either oral or written. This Agreement may be amended only by written instrument signed by both City and Consultant.

ARTICLE XXIII
VENUE

The obligations of the parties to this Agreement shall be performable in Hutto, Williamson County, Texas. If legal action, such as civil litigation, is necessary in connection therewith, exclusive venue shall lie in Williamson County, Texas.

ARTICLE XXIV
NOTICES

Except as may be provided elsewhere herein, all notices, communications, and reports required or permitted under this Agreement shall personally be delivered or mailed to the respective party by depositing the same in the United States Postal Service, addressed to the applicable address shown below, unless and until either party otherwise is notified in writing by the other party of a change of such address. Mailed notices shall be deemed communicated as of five (5) calendar days of mailing. In cases of emergency communication may be provided through email, in person, or telephone notices which shall be followed with the mailing procedure herein described.

If intended for City, to:

City of Hutto

Attention: Hutto Engineering
500 West Live Oak Hutto TX
78634

(737) 361-8630

kate.moriarty@huttotx.gov

If intended for Consultant, to:

WSB LLC

Attention: Vice President, Municipal
1221 S. Mopac Expy, Suite 355
Austin, TX 78746

(612) 360-1292

JKennedy@wsbeng.com

ARTICLE XXV
INDEPENDENT CONTRACTOR

In performing services under this Agreement, the relationship between City and Consultant is that of an independent contractor. By the execution of this Agreement, Consultant and City do not change the independent contractor status of Consultant. Consultant shall exercise independent judgment in performing its duties and obligations under this Agreement and solely is responsible for setting working hours, scheduling or prioritizing the work flow and determining how the work is to be performed. No term or provision of this Agreement or act of Consultant, in the performance of this Agreement, shall be construed as making Consultant the agent, servant or employee of City, or as making Consultant or any of its agents or employees eligible for any fringe benefits, such as retirement, insurance and worker's compensation, which City provides to or for its employees.

ARTICLE XXVI
CAPTIONS

The captions for the individual provisions of this Agreement are for informational purposes only and shall not be construed to effect or modify the substance of the terms and conditions of this Agreement to which any caption relates.

IN WITNESS WHEREOF, City of Hutto has lawfully caused these present to execute this Agreement by the hand of City Manager, or designee; Consultant, acting by the hand of _____, thereunto authorized _____ does now sign, execute and deliver this document.

Executed on this_____day of _____, A. D._____.

CITY OF HUTTO

_____
James Earp
City Manager

WSB LLC

By: _____
Jay Kennedy

Vice President, Municipal
Title

Exhibit 1

INDIVIDUAL PROJECT ORDER #2

In accordance with Agreement for Owners Representative (OR) Services between the City of Hutto (Owner) and Vendor, the parties agree as follows:

1. Background Data
    a. Individual Project Order 2
    b. Owner: City of Hutto
    c. Vendor: WSB, LLC

Specific Project (title): Owner's Representative Services

1) Scope of services for **WSB, LLC** will include the following services (Refer to Attached A for Full Services Detail

    a. See attached scope of services

2) Fee: NTE $162,000

Work Description	Original Fee	Amendment Amount	Change in Fee	Fee Type
Owner's Representative Services	$95,000.00	$257,000.00	$162,000.00	NTE
TOTAL				

3) Deadline: This form is to be signed along with any supplementary materials and must be submitted to Kate Moriarty, Executive Director of Administrative Services via email by **08-07-26 (two Fridays before City Council Agenda date)**, at 12PM CST.

Point of Contact
Kate Moriarty
Exec. Director of Administrative Services
Kate.Moriarty@HuttoTX.gov

EXHIBIT 2
SCOPE OF SERVICES

(Shall include the role and responsibilities of Consultant, as detailed in City's General Conditions attached hereto)

Exhibit A
February 9, 2026

Owner's Representative Services
City of Hutto, Texas

I. Project Description

WSB will provide a variety of Owner's Representative Services to the City of Hutto. Services, even if not listed herein, shall be provided at City discretion when effort is mutually deemed to be of value to the Staff or Program without duplicating services of contracted consultants. WSB understands scope and requests will vary week-to-week. WSB offers two scenarios in the compensation section, at the request of the Interim City Engineer, with 10 hours/week and 20 hours/week level of service. WSB will perform at the level of amount awarded by City Council.

Duration of the following scope of service: the following is applicable for six (6) months from final signatures of the contract.

The following scope of services does not and will not include fees for project management for WSB's projects already under contract which include T10 Ed Schmidt Sidewalks, T10 Ed Schmidt Intersection, T48 Limmer Loop, and Legends of Hutto Phase I. No consultant fees will be incurred or invoiced under this contract for the above-listed projects.

II. Scope of Services

1. Task 1 – Construction Representative Services

A. Construction Representative – Designate and assign a construction phase representative to be a representative on behalf of the City to provide all or some of the services listed below depending on need. No actions shall take the place of the design engineer's or design firm's level of responsibility or role, but instead WSB shall augment and/or support Staff in assigned tasks and roles.
   1) Participates, monitors, and reports on the various phases of construction including management and communication between the design team, construction team, inspectors, construction materials testing team, construction company, City Staff, and other necessary parties or stakeholders necessary to successfully complete the project.
   2) Develops solutions to problems that arise during construction and coordinates with parties necessary to successfully complete the project.
   3) Responds promptly to requests, responds to requests for assistance, meet commitments, writes clearly and informatively and performs project management functions as assigned.
   4) Reports to the designated Staff or Staff Members.

B. Pre-Construction Conference – Schedule and meet with the City, the contractor, and other interested parties to discuss the construction of the Project, including Project requirements, communication procedures, Project scheduling, personnel, laboratory testing requirements, field inspection, construction staking, pay requests, and other pertinent matters that may impact the Project.

C. Regular Progress Meetings – Schedule and attend progress meetings with the Contractor to review submittals, schedule, critical path, concerns, pay apps, and any questions/concerns from the City or Contractor.
   1) Manage Project activities (including documenting correspondence, phone and conference calls, maintain project files for the length of the project, meeting agendas, meeting minutes or detailed notes, and schedule meetings), direct Engineer's team/staff (at the direction of the City), coordinate and review work, correspond with the City and its representatives, and assist the City and its representatives in preparing responses to Project-related inquiries.

D. Contractor Requests for Information – Review, coordinate, and record RFI's and responses.

E. Change Orders – Review, process, and record Change Orders and the Engineer of Record/Design Firm recommendations.
   1) Coordinate with the City of necessary paperwork to execute change orders.

F. Monthly Pay Applications – Engineer of Record/Design Firm to review applications for completeness in administrative paperwork. Review for contract compliance to the information known to the Construction Representative. Record approved pay applications. WSB will not verify quantities.

G. Final Walk-Through – Upon substantial completion of construction, schedule and participate in a final walk-through with the City and the contractor and contribute items to the City for inclusion in a punch list.

H. Program Scheduling:
   1) City to assign list of projects for WSB to track a master schedule of capital projects on behalf of the City. Track master schedule for all assigned projects (City to assign projects for WSB to track).
   2) Request and track assigned project schedules received from firms and contractors.

3) Maintain an overall master schedule indicating tasks, subtasks, critical dates, milestones, float, negative float, and deliverables.
4) Compile and perform analytics on schedules program-wide to identify efficiencies and critical paths. Communicate such items with Staff, Inspectors, and during Construction Meetings.
5) Provide regular updates to Staff.

I. Site Visits:
1) Weekly site visits for WSB's Selina Brandon, P.E. is assumed.
2) Mileage for site visits shall not be invoiced separately, and they are included in the hourly rates below.

III. Compensation

1. The basis of compensation for Services shall be on an hourly basis.
2. **As compensation for the Services listed above, the City shall pay to the Engineer an amount not to exceed:**
   - **A. Assuming Project Manager Selina Brandon spends up to 10 hours/week on above services: ninety-five thousand dollars ($95,000) unless otherwise amended.**
   - **B. Assuming Project Manager Selina Brandon spends up to 20 hours/week on above services: One hundred sixty-two thousand dollars ($162,000) unless otherwise amended.**
3. The amounts billed will be based on the cumulative hours charged to the specified category of services on the Specific Project during the billing period by each class of Engineer's employees times Standard Hourly Rates for each applicable billing class, plus reimbursable expenses.
4. Engineer shall separate charges consistent with the City's cost allocation policy, so that the costs can be connected to the specific capital project(s), as needed.
5. The Standard Hourly Rates and Reimbursable Expenses Schedule will be adjusted annually, as of January 1, to reflect equitable changes in the compensation payable to Engineer.
6. 2026 Owner's Representative Standard Hourly Rates
   - A. See attached Engineer's 2026 Rate Schedule.
   - **B. Engineer's key team members are included below, along with their 2026 hourly rate.**
     - **1) Angellia Points, Client Representative, QC, Advisor — $263.00**
     - **2) Selina Brandon, Senior Project Manager — $232.00 (Day-to-Day Project Manager)**
     - **3) Jeremy Allamon, Project Manager — $187.00**
     - **4) Andre Vasquez, Scheduler — $187.00**

IV. Assumptions

1. Expenses shall be invoiced without mark-up.
2. Any design work will be completed in AutoCAD.
3. NOAA Atlas 14 precipitation frequency values will be utilized, if drainage analyses are required.
4. Subconsultant invoices shall be invoiced without prime consultant mark-up.

V. On-Call Technical Support

1. WSB is able to provide on-call technical support, at City discretion, when effort is mutually deemed to be of value to the City without duplicating the services of other contracted consultants.
   - A. Additional Services to be approved upon request, in writing, by the City of Hutto. Fee for such services are not included in the above fee.
     - 1) Technical Support, Management and Coordination:
       - a. Licensed Professional Engineer (Texas) to be responsible for the project management, and communications with the City and its representatives. Prepare for and conduct coordination/progress meetings with the City and its representatives, as necessary to communicate Owner's Representative services and needs.
       - b. Provide technical, professional, and administrative support as-needed for construction management, construction inquiries, technical evaluations, or other management support.
       - c. Prepare memos or reports for Staff support at City Council presentations. Prepares exhibits, graphics, and presentations needed to communicate projects.

d. Other technical services as assigned.

EXHIBIT 3

FEE PROPOSAL

2026 Rate Schedule

	Billing Rate/Hour
ASSOCIATE | SR. ASSOCIATE | PRINCIPAL | SR. PRINCIPAL	$202 - $291
SR. PROJECT ENGINEER | SR. PROJECT MANAGER	$202 - $263
PROJECT MANAGER	$178 - $199
GRADUATE ENGINEER | PROJECT ENGINEER	$120 - $198
PROJECT MANAGER ASSISTANT	$98 - $161
ENGINEERING TECHNICIAN | ENGINEERING SPECIALIST	$79 - $197
LANDSCAPE ARCHITECT | SR. LANDSCAPE ARCHITECT	$89 - $189
ENVIRONMENTAL SCIENTIST | SR. ENVIRONMENTAL SCIENTIST	$80 - $187
PLANNER | SR. PLANNER	$92 - $195
GIS SPECIALIST | SR. GIS SPECIALIST	$89 - $195
CONSTRUCTION OBSERVER	$121 - $158
SURVEY	
Survey Office Technician	$141 - $176
Drone Pilot	$204
One-Person Crew	$204
Two-Person Crew	$275
OFFICE TECHNICIAN	$70 - $152

Billing rates do not include costs associated with cell phone, reproduction, and mailing. Rates shown include mileage. WSB notes that per the Master Service Agreement, no mileage charges will be reimbursed, based on the Austin Metropolitan Service Area.

EXHIBIT 4
GENERAL CONDITIONS

General Conditions for Construction Contracts

Table of Contents

Article 1. Definitions 1

Article 2. Wage Rates and Other Laws Governing Construction 6

Article 3. General Responsibilities of Owner and Contractor 9

Article 4. Historically Underutilized Business (HUB) Subcontracting Plan 16

Article 5. Bonds and Insurance 18

Article 6. Construction Documents, Coordination Documents, and Record Documents 25

Article 7. Construction Safety 28

Article 8. Quality Control 30

Article 9. Construction Schedules 36

Article 10. Payments 42

Article 11. Changes 47

Article 12. Project Completion and Acceptance 52

Article 13. Warranty and Guarantee 57

Article 14. Suspension and Termination 59

Article 15. Dispute Resolution 63

Article 16. Miscellaneous 64

Article 1. Definitions

Unless the context clearly requires another meaning, the following terms have the meaning assigned herein.

1.1 *Application for Payment* means Contractor's monthly partial invoice for payment that includes any portion of the Work that has been completed for which an invoice has not been submitted and performed in accordance with the requirements of the Contract Documents. The Application for Payment accurately reflects the progress of the Work, is itemized based on the Schedule of Values, bears the notarized signature of Contractor, and shall not include subcontracted items for which Contractor does not intend to pay.

1.2 *Application for Final Payment* means Contractor's final invoice for payment that includes any portion of the Work that has been completed for which an invoice has not been submitted, amounts owing to adjustments to the final Contract Sum resulting from approved change orders, and release of remaining Contractor's retainage.

1.3 *Architect/Engineer (A/E)* means a person registered as an architect pursuant to Tex. Occ. Code Ann., Chapter 1051, as a landscape architect pursuant to Tex. Occ. Code Ann., Chapter 1052, a person licensed as a professional engineer pursuant Tex. Occ. Code Ann., Chapter 1001, and/or a firm employed by Owner or Design-Build Contractor to provide professional architectural or engineering services and to exercise overall responsibility for the design of a Project or a significant portion thereof, and to perform the contract administration responsibilities set forth in the Contract.

1.4 *Baseline Schedule* means the initial time schedule prepared by Contractor for Owner's information and acceptance that conveys Contractor's and Subcontractors' activities (including coordination and review activities required in the Contract Documents to be performed by A/E and ODR), durations, and sequence of work related to the entire Project to the extent required by the Contract Documents. The schedule clearly demonstrates the critical path of activities, durations and necessary predecessor conditions that drive the end date of the schedule. The Baseline Schedule shall not exceed the time limit current under the Contract Documents.

1.5 *Certificate of Final Completion* means the certificate issued by A/E that documents, to the best of A/E"s knowledge and understanding, Contractor's completion of all Contractor's Punchlist items and pre-final Punchlist items, final cleanup and Contractor's provision of Record Documents, operations and maintenance manuals, and all other closeout documents required by the Contract Documents.

1.6 *Change Order* means a written modification of the Contract between Owner and Contractor, signed by Owner, Contractor and A/E.

1.7 *Close-out Documents* mean the product brochures, submittals, product/equipment maintenance and operations instructions, manuals, and other documents/warranties, record documents, affidavit of payment, release of lien and claim, and as may be further defined, identified, and required by the Contract Documents.

1.8 *Contract* means the entire agreement between Owner and Contractor, including all of the Contract Documents.

1.9 *Contract Date* is the date when the agreement between Owner and Contractor becomes effective.

1.10 *Contract Documents* mean those documents identified as a component of the agreement (Contract) between Owner and Contractor. These may include, but are not limited to, Drawings; Specifications; General, Supplementary General, and Special Conditions; and all pre-bid and/or pre-proposal addenda.

1.11 *Contract Sum* means the total compensation payable to Contractor for completion of the Work in accordance with the terms of the Contract.

1.12 *Contract Time* means the period between the start date identified in the Notice to Proceed with construction and the Substantial Completion date identified in the Notice to Proceed or as subsequently amended by a Change Order.

1.13 *Contractor* means the individual, corporation, limited liability company, partnership, firm, or other entity contracted to perform the Work, regardless of the type of construction contract used, so that the term as used herein includes a Construction Manager-at-Risk or a Design-Build firm as well as a general or prime Contractor. The Contract Documents refer to Contractor as if singular in number.

1.14 *Construction Documents* mean the Drawings, Specifications, and other documents issued to build the Project. Construction Documents become part of the Contract Documents when listed in the Contract or any Change Order.

1.15 *Construction Manager-at-Risk*, in accordance with Tex. Gov't Code, Chapter 2166, means a sole proprietorship, partnership, corporation, or other legal entity that assumes the risk for construction, rehabilitation, alteration, or repair of a facility at the contracted price as a general contractor and provides consultation to Owner regarding construction during and after the design of the facility.

1.16 *Date of Commencement* means the date designated in the Notice to Proceed for Contractor to commence the Work.

1.17 *Day* means a calendar day unless otherwise specifically stipulated.

1.18 *Design-Build* means a project delivery method in which the detailed design and subsequent construction is provided through a single contract with a Design-Build firm; a team, partnership, or legal entity that includes design professionals and a builder. The Design-Build Project delivery shall be implemented in accordance with Tex. Gov't Code § 2166.2531.

1.19 *Drawings* mean that product of A/E which graphically depicts the Work.

1.20 *Final Completion* means the date determined and certified by A/E and Owner on which the Work is fully and satisfactorily complete in accordance with the Contract.

1.21 *Final Payment* means the last and final monetary compensation made to Contractor for any portion of the Work that has been completed and accepted for which payment has not been made, amounts owing to adjustments to the final Contract Sum resulting from approved change orders, and release of Contractor's retainage.

1.22 *Historically Underutilized Business (HUB)* pursuant to Tex. Gov't Code, Chapter 2161, means a business that is at least 51% owned by an Asian Pacific American, a Black American, a Hispanic American, a Native American and/or an American Woman; is an entity with its principal place of business in Texas; and has an owner residing in Texas with proportionate interest that actively participates in the control, operations, and management of the entity's affairs.

1.23 *Notice to Proceed* means written document informing Contractor of the dates beginning Work and the dates anticipated for Substantial Completion.

1.24 *Open Item List* means a list of work activities, Punchlist items, changes or other issues that are not expected by Owner and Contractor to be complete prior to Substantial Completion.

1.25 *Owner* means the City of Hutto.

1.26 *Owner's Designated Representative (ODR)* means the individual assigned by Owner to act on its behalf and to undertake certain activities as specifically outlined in the Contract. ODR is the only party authorized to direct changes to the scope, cost, or time of the Contract.

1.27 *Project* means all activities necessary for realization of the Work. This includes design, contract award(s), execution of the Work itself, and fulfillment of all Contract and warranty obligations.

1.28 *Progress Assessment Report (PAR)* means the monthly compliance report to Owner verifying compliance with the HUB subcontracting plan (HSP).

129 *Proposed Change Order (PCO)* means a document that informs Contractor of a proposed change in the Work and appropriately describes or otherwise documents such change including Contractor's response of pricing for the proposed change.

130 *Punchlist* means a list of items of Work to be completed or corrected by Contractor after Substantial Completion. Punch lists indicate items to be finished, remaining Work to be performed, or Work that does not meet quality or quantity requirements as required in the Contract Documents.

131 *Record Documents* mean the drawing set, Specifications, and other materials maintained by Contractor that documents all addenda, Architect's Supplemental Instructions, Change Orders and postings and markings that record the as-constructed conditions of the Work and all changes made during construction.

132 *Request for Information (RFI)* means a written request by Contractor directed to A/E or ODR for a clarification of the information provided in the Contract Documents or for direction concerning information necessary to perform the Work that may be omitted from the Contract Documents.

133 *Samples* mean representative physical examples of materials, equipment, or workmanship used to confirm compliance with requirements and/or to establish standards for use in execution of the Work.

134 *Schedule of Values* means the detailed breakdown of the cost of the materials, labor, and equipment necessary to accomplish the Work as described in the Contract Documents, submitted by Contractor for approval by Owner and A/E.

135 *Shop Drawings* mean the drawings, diagrams, illustrations, schedules, performance charts, brochures, and other data prepared by Contractor or its agents which detail a portion of the Work.

136 *Site* means the geographical area of the location of the Work.

137 *Special Conditions* mean the documents containing terms and conditions which may be unique to the Project. Special Conditions are a part of the Contract Documents and have precedence over the Uniform General Conditions and Supplementary General Conditions.

138 *Specifications* mean the written product of A/E that establishes the quality and/or performance of products utilized in the Work and processes to be used, including testing and verification for producing the Work.

139 *Subcontractor* means a business entity that enters into an agreement with Contractor to perform part of the Work or to provide services, materials, or equipment for use in the Work.

1.40 *Submittal Register* means a list provided by Contractor of all items to be furnished for review and approval by A/E and Owner and as identified in the Contract Documents including anticipated sequence and submittal dates.

1.41 *Substantial Completion* means the date determined and certified by Contractor, A/E, and Owner when the Work, or a designated portion thereof, is sufficiently complete, in accordance with the Contract, so as to be operational and fit for the use intended.

1.42 *Supplementary General Conditions* mean procedures and requirements that modify the Uniform General Conditions. Supplementary General Conditions, when used, have precedence over the Uniform General Conditions.

1.43 *Unit Price Work* means the Work, or a portion of the Work, paid for based on incremental units of measurement.

1.44 *Unilateral Change Order (ULCO)* means a Change Order issued by Owner without the complete agreement of Contractor, as to cost and/or time.

1.45 *Work* means the administration, procurement, materials, equipment, construction and all services necessary for Contractor, and/or its agents, to fulfill Contractor's obligations under the Contract.

1.46 *Work Progress Schedule* means the continually updated time schedule prepared and monitored by Contractor that accurately indicates all necessary appropriate revisions as required by the conditions of the Work and the Project while maintaining a concise comparison to the Baseline Schedule.

Article 2. Wage Rates and Other Laws Governing Construction

2.1 Environmental Regulations. Contractor shall conduct activities in compliance with applicable laws and regulations and other requirements of the Contract relating to the environment and its protection at all times. Unless otherwise specifically determined, Owner is responsible for obtaining and maintaining permits related to stormwater run-off. Contractor shall conduct operations consistent with stormwater run-off permit conditions. Contractor is responsible for all items it brings to the Site, including hazardous materials, and all such items brought to the Site by its Subcontractors and suppliers, or by other entities subject to direction of Contractor. Contractor shall not incorporate hazardous materials into the Work without prior approval of Owner, and shall provide an affidavit attesting to such in association with request for Substantial Completion inspection.

2.2 Wage Rates. Contractor shall not pay less than the wage scale of the various classes of labor as shown on the prevailing wage schedule provided by Owner in the bid or proposal specifications. The specified wage rates are minimum rates only. Owner is not bound to pay any claims for additional compensation made by any Contractor because the Contractor pays wages in excess of the applicable minimum rate contained in the Contract. The prevailing wage schedule is not a representation that qualified labor adequate to perform the Work is available locally at the prevailing wage rates.

2.2.1 Notification to Workers. Contractor shall post the prevailing wage schedule in a place conspicuous to all workers on the Project Site and shall notify each worker, in writing, of the following as they commence work on the Contract: the worker's job classification, the established minimum wage rate requirement for that classification, as well as the worker's actual wage. The notice must be delivered to and signed in acknowledgement of receipt by the worker and must list both the wages and fringe benefits to be paid or furnished for each classification in which the worker is assigned duties. When requested by Owner, Contractor shall furnish evidence of compliance with the Texas Prevailing Wage Law and the addresses of all workers.

2.2.1.1 Contractor shall submit a copy of each worker's wage-rate notification to ODR with the application for progress payment for the period during which the worker was engaged in activities on behalf of the Project.

2.2.1.2 The prevailing wage schedule is determined by Owner in compliance with Tex. Gov't Code, Chapter 2258. Should Contractor at any time become aware that a particular skill or trade not reflected on Owner's prevailing wage schedule will be or is being employed in the Work, whether by Contractor or by Subcontractor, Contractor shall promptly inform ODR of the proposed wage to be paid for the skill along with a justification for same and ODR shall promptly concur with or reject the proposed wage and classification.

Contractor is responsible for determining the most appropriate wage for a particular skill in relation to similar skills or trades identified on the prevailing wage schedule. In no case, shall any worker be paid less than the wage indicated for laborers.

22.2 Penalty for Violation. Contractor, and any Subcontractor, will pay to the City a penalty of sixty dollars ($60) for each worker employed for each day, or portion thereof, that the worker is paid less than the wage rates stipulated in the prevailing wage schedule.

22.3 Complaints of Violations.

22.3.1 Owner's Determination of Good Cause. Upon receipt of information concerning a violation, Owner will conduct an investigation in accordance with Tex. Gov't Code, Chapter 2258 and make an initial determination as to whether good cause exists that a violation occurred. Upon making a good cause finding, Owner will retain the full amounts claimed by the claimant or claimants as the difference between wages paid and wages due under the prevailing wage schedule and any supplements thereto, together with the applicable penalties, such amounts being subtracted from successive progress payments pending a final decision on the violation.

22.3.2 No Extension of Time. If Owner's determination proves valid that good cause existed to believe a violation had occurred, Contractor is not entitled to an extension of time for any delay arising directly or indirectly from the arbitration procedures.

23 Venue for Suits. The venue for any suit arising from the Contract will be in a court of competent jurisdiction in Williamson County, Texas, or as may otherwise be designated in the Supplementary General Conditions.

24 Licensing of Trades. Contractor shall comply with all applicable provisions of State law related to license requirements for skilled tradesmen, contractors, suppliers and or laborers, as necessary to accomplish the Work. In the event Contractor, or one of its Subcontractors, loses its license during the term of performance of the Contract, Contractor shall promptly hire or contract with a licensed provider of the service at no additional cost to Owner.

25 Royalties, Patents, and Copyrights. Contractor shall pay all royalties and license fees, defend suits or claims for infringement of copyrights and patent rights, and shall hold Owner harmless from loss on account thereof, but shall not be responsible for such defense or loss when a particular design, process or product of a particular manufacturer or manufacturers is required by the Contract Documents, or where the copyright violations are contained in Drawings, Specifications or other documents prepared by Owner or A/E. However, if Contractor has reason to believe that the required design, process, or product is an infringement of a copyright or a patent,

Contractor shall be responsible for such loss unless such information is promptly furnished to A/E.

26 State Sales and Use Taxes. Owner qualifies for exemption from certain State and local sales and use taxes pursuant to the provisions of Tex. Tax Code, Chapter 151. Upon request from Contractor, Owner shall furnish evidence of tax-exempt status. Contractor may claim exemption from payment of certain applicable State taxes by complying with such procedures as prescribed by the State Comptroller of Public Accounts. Owner acknowledges not all items qualify for exemption. Owner is not obligated to reimburse Contractor for taxes paid on items that qualify for tax exemption.

Article 3. General Responsibilities of Owner and Contractor

3.1 Owner's General Responsibilities. Owner is the entity identified as such in the Contract and referred to throughout the Contract Documents as if singular in number.

3.1.1 Preconstruction Conference. Prior to, or concurrent with, the issuance of Notice to Proceed with construction, a conference will be convened for attendance by Owner, Contractor, A/E and appropriate Subcontractors. The purpose of the conference is to establish a working understanding among the parties as to the Work, the operational conditions at the Project Site, and general administration of the Project. Topics include communications, schedules, procedures for handling Shop Drawings and other submittals, processing Applications for Payment, maintaining required records and all other matters of importance to the administration of the Project and effective communications between the Project team members.

3.1.2 Owner's Designated Representative. Prior to the start of construction, Owner will identify Owner's Designated Representative (ODR), who has the express authority to act and bind Owner to the extent and for the purposes described in the various Articles of the Contract, including responsibilities for general administration of the Contract.

3.1.2.1 Unless otherwise specifically defined elsewhere in the Contract Documents, ODR is the single point of contact between Owner and Contractor. Notice to ODR, unless otherwise noted, constitutes notice to Owner under the Contract.

3.1.2.2 All directives on behalf of Owner will be conveyed to Contractor and A/E by ODR in writing.

3.1.2.3 Owner will furnish or cause to be furnished, free of charge, the number of complete sets of the Drawings, Specifications, and addenda as provided in the Supplementary General Conditions or Special Conditions.

3.1.3 Owner Supplied Materials and Information.

3.1.3.1 Owner will furnish to Contractor those surveys describing the physical characteristics, legal description, limitations of the Site, Site utility locations, and other information used in the preparation of the Contract Documents.

3.1.3.2 Owner will provide information, equipment, or services under Owner's control to Contractor with reasonable promptness.

3.1.4 Availability of Lands. Owner will furnish, as indicated in the Contract, all required rights to use the lands upon which the Work occurs. This includes rights-of-way and easements for access and such other lands that are designated for use by Contractor. Contractor shall comply with all Owner identified encumbrances or restrictions specifically related to use of lands so furnished. Owner will obtain and pay for easements for permanent structures or permanent changes in existing facilities, unless otherwise required in the Contract Documents.

3.1.5 Limitation on Owner's Duties.

3.1.5.1 Owner will not supervise, direct, control or have authority over or be responsible for Contractor's means, methods, technologies, sequences or procedures of construction or the safety precautions and programs incident thereto. Owner is not responsible for any failure of Contractor to comply with laws and regulations applicable to the Work. Owner is not responsible for the failure of Contractor to perform or furnish the Work in accordance with the Contract Documents. Except as provided in Section 2.5, Owner is not responsible for the acts or omissions of Contractor, or any of its Subcontractors, suppliers or of any other person or organization performing or furnishing any of the Work on behalf of Contractor.

3.1.5.2 Owner will not take any action in contravention of a design decision made by A/E in preparation of the Contract Documents, when such actions are in conflict with statutes under which A/E is licensed for the protection of the public health and safety.

3.2 Role of Architect/Engineer. Unless specified otherwise in the Contract between Owner and Contractor, A/E shall provide general administration services for Owner during the construction phase of the project. Written correspondence, requests for information, and Shop Drawings/submittals shall be directed to A/E for action. A/E has the authority to act on behalf of Owner to the extent provided in the Contract Documents, unless otherwise modified by written instrument, which will be furnished to Contractor by ODR, upon request.

3.2.1 Site Visits.

3.2.1.1 A/E will make visits to the Site at intervals as provided in the A/E"s Contract with Owner, to observe the progress and the quality of the various aspects of Contractor's executed Work and report findings to Owner.

3.2.1.2 A/E has the authority to interpret Contract Documents and inspect the Work for compliance and conformance with the Contract. Except as referenced in Paragraph 3.1.5.2, Owner retains the sole authority to accept or reject Work and issue direction for correction, removal, or replacement of Work.

3.2.2 Clarifications and Interpretations. It may be determined that clarifications or interpretations of the Contract Documents are necessary. Upon direction by ODR, such clarifications or interpretations will be provided by A/E consistent with the intent of the Contract Documents. A/E will issue these clarifications with reasonable promptness to Contractor as A/E‟s supplemental instruction ("ASI") or similar instrument. If Contractor believes that such clarification or interpretation justifies an adjustment in the Contract Sum or the Contract Time, Contractor shall so notify Owner in accordance with the provisions of Article 11.

3.2.3 Limitations on Architect/Engineer Authority. A/E is not responsible for:

3.2.3.1 Contractor's means, methods, techniques, sequences, procedures, safety, or programs incident to the Project, nor will A/E supervise, direct, control or have authority over the same;

3.2.3.2 The failure of Contractor to comply with laws and regulations applicable to the furnishing or performing the Work;

3.2.3.3 Contractor's failure to perform or furnish the Work in accordance with the Contract Documents; or

3.2.3.4 Acts or omissions of Contractor, or of any other person or organization performing or furnishing any of the Work.

3.3 Contractor's General Responsibilities. Contractor is solely responsible for implementing the Work in full compliance with all applicable laws and the Contract Documents and shall supervise and direct the Work using the best skill and attention to assure that each element of the Work conforms to the Contract requirements. Contractor is solely responsible for all construction means, methods, techniques, safety, sequences, coordination and procedures.

3.3.1 Project Administration. Contractor shall provide Project administration for all Subcontractors, vendors, suppliers, and others involved in implementing the Work and shall coordinate administration efforts with those of A/E and ODR in accordance with these general conditions and other provisions of the Contract, and as outlined in the pre-construction conference.

3.3.2 Contractor's Management Personnel. Contractor shall employ a competent person or persons who will be present at the Project Site during the progress of the Work to supervise or oversee the work. The competent persons are subject to the approval of ODR. Contractor shall not change approved staff during the course of the project without the written approval of ODR unless the staff member leaves the employment of Contractor. Contractor shall provide additional quality control, safety and other staff as stated in the Supplementary General Conditions.

3.3.3 Labor. Contractor shall provide competent, suitably qualified personnel to survey, lay-out, and construct the Work as required by the Contract Documents and maintain good discipline and order at the Site at all times.

3.3.4 Services, Materials, and Equipment. Unless otherwise specified, Contractor shall provide and assume full responsibility for all services, materials, equipment, labor, transportation, construction equipment and machinery, tools, appliances, fuel, power, light, heat, telephone, water, sanitary facilities, temporary facilities, and all other facilities, incidentals, and services necessary for the construction, performance, testing, start-up, inspection and completion of the Work.

3.3.5 Contractor General Responsibility. For Owner furnished equipment or material that will be in the care, custody, and control of Contractor, Contractor is responsible for damage or loss.

3.3.6 Non-Compliant Work. Should A/E and/or ODR identify Work as non-compliant with the Contract Documents, A/E and/or ODR shall communicate the finding to Contractor, and Contractor shall correct such Work at no additional cost to the Owner. The approval of Work by either A/E or ODR does not relieve Contractor from the obligation to comply with all requirements of the Contract Documents.

3.3.7 Subcontractors. Contractor shall not employ any Subcontractor, supplier or other person or organization, whether initially or as a substitute, against whom Owner shall have reasonable objection. Owner will communicate such objections in writing within ten (10) days of receipt of Contractor's intent to use such Subcontractor, supplier, or other person or organization. Contractor is not required to employ any Subcontractor, supplier or other person or organization to furnish any of the work to whom Contractor has reasonable objection. Contractor shall not substitute Subcontractors without the acceptance of Owner.

3.3.7.1 All Subcontracts and supply contracts shall be consistent with and bind the Subcontractors and suppliers to the terms and conditions of the Contract Documents including provisions of the Contract between Contractor and Owner.

3.3.7.2 Contractor shall be solely responsible for scheduling and coordinating the Work of Subcontractors, suppliers and other persons and organizations performing or furnishing any of the Work under a direct or indirect contract with Contractor. Require all Subcontractors, suppliers and such other persons and organizations performing or furnishing any of the Work to communicate with Owner only through Contractor. Contractor shall furnish to Owner a copy, at Owner's request, of each first-tier subcontract promptly after its execution. Contractor agrees that Owner has no obligation to review or approve the content of such contracts and that providing Owner such copies in no way relieves Contractor of any of the terms and conditions of the Contract, including, without limitation, any provisions of the Contract which require the Subcontractor to be bound to Contractor in the same manner in which Contractor is bound to Owner.

3.3.8 Continuing the Work. Contractor shall carry on the Work and adhere to the progress schedule during all disputes, disagreements, or alternative resolution processes with Owner. Contractor shall not delay or postpone any Work because of pending unresolved disputes, disagreements or alternative resolution processes, except as Owner and Contractor may agree in writing.

3.3.9 Cleaning. Contractor shall at all times, keep the Site and the Work clean and free from accumulation of waste materials or rubbish caused by the construction activities under the Contract. Contractor shall ensure that the entire Project is thoroughly cleaned prior to requesting Substantial Completion inspection and, again, upon completion of the Project prior to the final inspection.

3.3.10 Acts and Omissions of Contractor, its Subcontractors and Employees. Contractor shall be responsible for acts and omissions of his employees and all its Subcontractors, their agents and employees. Owner may, in writing, require Contractor to remove from the Project any of Contractor's or its Subcontractor's employees whom ODR finds to be careless, incompetent, unsafe, uncooperative, disruptive, or otherwise objectionable.

3.3.11 Indemnification of Owner. Contractor covenants and agrees to FULLY INDEMNIFY and HOLD HARMLESS, Owner and the elected and appointed officials, employees, officers, directors, volunteers, and representatives of Owner, individually or collectively, from and against any and all costs, claims, liens, damages, losses, expenses, fees, fines, penalties, proceedings, actions, demands, causes of action, liability and suits of any kind and nature, including but not limited to, personal or bodily injury, death or property damage, made upon Owner directly or indirectly arising out of, resulting from or related to Contractor's activities under this Contract, including any acts or omissions of Contractor, or any agent, officer, director, representative, employee,

consultant or the Subcontractor of Contractor, and their respective officers, agents, employees, directors and representatives while in the exercise of performance of the rights or duties under this Contract. The indemnity provided for in this paragraph does not apply to any liability resulting from the negligence of the Owner, its officers or employees, separate contractors or assigned contractors, in instances where such negligence causes personal injury, death or property damage. IN THE EVENT CONTRACTOR AND OWNER ARE FOUND JOINTLY LIABLE BY A COURT OF COMPETENT JURISDICTION, LIABILITY WILL BE APPORTIONED COMPARATIVELY IN ACCORDANCE WITH THE LAWS OF THE STATE OF TEXAS, WITHOUT WAIVING ANY GOVERNMENTAL IMMUNITY AVAILABLE TO THE STATE UNDER TEXAS LAW AND WITHOUT WAIVING ANY DEFENSES OF THE PARTIES UNDER TEXAS LAW.

3.3.11.1 The provisions of this indemnification are solely for the benefit of the parties hereto and not intended to create or grant any rights, contractual or otherwise, to any other person or entity.

3.3.11.2 Contractor shall promptly advise Owner in writing of any claim or demand against Owner or against Contractor which involves Owner and known to Contractor and related to or arising out of Contractor's activities under this Contract.

3.3.12 Ancillary Areas. Operate and maintain operations and associated storage areas at the site of the Work in accordance with the following:

3.3.12.1 Confine all Contractor operations, including storage of materials and employee parking upon the Site of Work, to areas designated by Owner.

3.3.12.2 Contractor may erect, at its own expense, temporary buildings that will remain its property. Remove such buildings and associated utility service lines upon completion of the Work, unless Contractor requests and Owner provides written consent that it may abandon such buildings and utilities in place.

3.3.12.3 Use only established roadways or construct and use such temporary roadways as may be authorized by Owner. Do not allow load limits of vehicles to exceed the limits prescribed by appropriate regulations or law. Provide protection to road surfaces, curbs, sidewalks, trees, shrubbery, sprinkler systems, drainage structures and other like existing improvements to prevent damage and repair any damage thereto at the expense of Contractor.

3.3.12.4 Owner may restrict Contractor's entry to the Site to specifically assigned entrances and routes.

3.3.13 Separate Contracts. Owner reserves the right to award other contracts in connection with other portions of the Project under these same or substantially similar contract conditions, including those portions related to insurance and waiver of subrogation. Owner reserves the right to perform operations related to the Project with Owner's own forces.

3.3.14 Under a system of separate contracts, the conditions described herein continue to apply except as may be amended by change order.

3.3.15 Contractor shall cooperate with other contractors or forces employed on the Project by Owner, including providing access to Site and Project information as requested.

3.3.16 Owner shall be reimbursed by Contractor for costs incurred by Owner which are payable to a separate contractor because of delays, improperly timed activities, or defective construction by Contractor. Owner will equitably adjust the Contract by Change Order for costs incurred by Contractor because of delays, improperly timed activities, damage to the Work or defective construction by a separate contractor.

Article 4. Historically Underutilized Business (HUB) Subcontracting Plan

4.1 General Description. The purpose of the Historically Underutilized Business (HUB) program is to promote equal business opportunities for economically disadvantaged persons (as defined by Tex. Gov't Code, Chapter 2161) to contract with the State of Texas in accordance with the goals specified in the State of Texas Disparity Study. The HUB program annual procurement utilization goals are defined in 34 T.A.C. § 20.13(b).

4.1.1 State agencies are required by statute to make a good faith effort to assist HUBs in participating in contract awards issued by the State. 34 T.A.C. § 20.13(b) outlines the State's policy to encourage the utilization of HUBs in State contracting opportunities through race, ethnic and gender-neutral means.

4.1.2 A Contractor who contracts with the State in an amount of $100,000 or greater is required to make a good faith effort to award subcontracts to HUBs in accordance with 34 T.A.C. § 20.14(a)(2)(A) by submitting a HUB subcontracting plan within twenty-four (24) hours after the bid or response is due and complying with the HUB subcontracting plan after it is accepted by Owner and during the term of the Contract.

4.2 Compliance with Approved HUB Subcontracting Plan. Contractor, having been awarded this Contract in part by complying with the HUB program statute and rules, hereby covenants to continue to comply with the HUB program as follows:

4.2.1 Prior to adding or substituting a Subcontractor, promptly notify Owner in the event a change is required for any reason to the accepted HUB subcontracting plan.

4.2.2 Conduct the good-faith effort activities required and provide Owner with necessary documentation to justify approval of a change to the approved HUB subcontracting plan.

4.2.3 Cooperate in the execution of a Change Order or such other approval of the change in the HUB subcontracting plans as Contractor and Owner may agree to.

4.2.4 Maintain and make available to Owner upon request business records documenting compliance with the accepted HUB subcontracting plan.

4.2.5 Upon receipt of payment for performance of Work, submit to Owner a compliance report, in the format required by Owner that demonstrates Contractor's performance of the HUB subcontracting plan.

4.2.5.1 Progress Assessment Report (PAR): monthly compliance reports to Owner (contracting agency), verifying their compliance with the HUB subcontracting plan, including the use/expenditures they have made to Subcontractors. (The PAR is available at **http://www.window.state.tx.us/procurement/prog/hub/hub-forms/progressassessmentrpt.xls**).

4.2.6 Promptly and accurately explain and provide supplemental information to Owner to assist in Owner's investigation of Contractor's good-faith effort to fulfill the HUB subcontracting plan and the requirements under 34 T.A.C. § 20.14(a)(1).

4.3 Failure to Demonstrate Good-Faith Effort. Upon a determination by Owner that Contractor has failed to demonstrate a good-faith effort to fulfill the HUB subcontracting plan or any Contract covenant detailed above, Owner may, in addition to all other remedies available to it, report the failure to perform to the Comptroller of Public Accounts, Texas Procurement and Support Services Division, Historically Underutilized Business Program and may bar Contractor from future contracting opportunities with Owner.

Article 5. Bonds and Insurance

5.1 Construction Bonds. Contractor is required to tender to Owner, prior to commencing the Work, performance and payment bonds, as required by Tex. Gov't Code, Chapter 2253. On Construction Manager-at-Risk and Design-Build Projects the Owner shall require a security bond, as described in Subsection 5.1.2 below.

5.1.1 Bond Requirements. Each bond shall be executed by a corporate surety or sureties authorized to do business in the State of Texas and acceptable to Owner, on Owner's form, and in compliance with the relevant provisions of the Texas Insurance Code. If any bond is for more than ten (10) percent of the surety's capital and surplus, Owner may require certification that the company has reinsured the excess portion with one or more reinsurers authorized to do business in the State. A reinsurer may not reinsure for more than ten (10) percent of its capital and surplus. If a surety upon a bond loses its authority to do business in the State, Contractor shall, within thirty (30) days after such loss, furnish a replacement bond at no added cost to Owner.

5.1.1.1 A Performance bond is required if the Contract Sum is in excess of $100,000. The performance bond is solely for the protection of Owner. The performance bond is to be for the Contract Sum to guarantee the faithful performance of the Work in accordance with the Contract Documents. The form of the bond shall be approved by the Office of the Attorney General of Texas. The performance bond shall be effective through Contractor's warranty period.

5.1.1.2 A Payment bond is required if the Contract price is in excess of $25,000. The payment bond is to be for the Contract Sum and is payable to Owner solely for the protection and use of payment bond beneficiaries. The form of the bond shall be approved by the Office of the Attorney General of Texas.

5.1.2 Security Bond. The security bond provides protection to Owner if Contractor presents an acceptable guaranteed maximum price ("GMP") to Owner and 1) fails to execute the GMP; or 2) fails to deliver the required payment and performance bonds within the time period stated below.

5.1.3 When Bonds Are Due

5.1.3.1 Security bonds are due within ten (10) days of signing a Construction Manager-at-Risk or Design-Build Contract.

5.1.3.2 Payment and performance bonds are due within ten (10) days of Contractor's receipt of a fully executed GMP on a Construction Manager-at-Risk project or the Contract Sum for a Design-Build

project, or within ten (10) days of Contractor's receipt of a fully executed Contract on competitively bid or competitive sealed proposal projects.

5.14 Power of Attorney. Each bond shall be accompanied by a valid power of attorney (issued by the surety company and attached, signed and sealed with the corporate embossed seal, to the bond) authorizing the attorney-in-fact who signs the bond to commit the company to the terms of the bond, and stating any limit in the amount for which the attorney can issue a single bond.

5.15 Bond Indemnification. The process of requiring and accepting bonds and making claims there under shall be conducted in compliance with Tex. Gov't Code, Chapter 2253. IF FOR ANY REASON A STATUTORY PAYMENT OR PERFORMANCE BOND IS NOT HONORED BY THE SURETY, CONTRACTOR SHALL FULLY INDEMNIFY AND HOLD OWNER HARMLESS OF AND FROM ANY COSTS, LOSSES, OBLIGATIONS OR LIABILITIES IT INCURS AS A RESULT.

5.16 Furnishing Bond Information. Owner shall furnish certified copies of the payment bond and the related Contract to any qualified person seeking copies who complies with Tex. Gov't Code § 2253.026.

5.17 Claims on Payment Bonds. Claims on payment bonds must be sent directly to Contractor and his surety in accordance with Tex. Gov't Code § 2253.041. All payment bond claimants are cautioned that no lien exists on the funds unpaid to Contractor on such Contract, and that reliance on notices sent to Owner may result in loss of their rights against Contractor and/or his surety. Owner is not responsible in any manner to a claimant for collection of unpaid bills, and accepts no such responsibility because of any representation by any agent or employee.

5.18 Payment Claims when Payment Bond not Required. The rights of Subcontractors regarding payment are governed by Tex. Prop. Code §§ 53.231 – 53.239 when the value of the Contract between Owner and Contractor is less than $25,000.00. These provisions set out the requirements for filing a valid lien on funds unpaid to Contractor as of the time of filing the claim, actions necessary to release the lien and satisfaction of such claim.

5.19 Sureties. A surety shall be listed on the US Department of the Treasury's Listing of Approved Sureties maintained by the Bureau of Financial Management Service (FMS), www.fms.treas.gov/c570, stating companies holding Certificates of Authority as acceptable sureties on Federal bonds and acceptable reinsuring companies (FMS Circular 570).

5.2 Insurance Requirements. Contractor shall carry insurance in the types and amounts indicated in this Article for the duration of the Contract. The insurance shall be evidenced by delivery to Owner of certificates of insurance executed by the insurer or its authorized agent stating coverages, limits, expiration dates and compliance with all applicable required provisions. Upon request, Owner, and/or its agents, shall be entitled to receive without expense, copies of the policies and all endorsements. Contractor shall update all expired policies prior to submission for monthly payment. Failure to update policies shall be reason for withholding of payment until renewal is provided to Owner.

5.2.1 Contractor shall provide and maintain all insurance coverage with the minimum amounts described below until the end of the warranty period unless otherwise stated in Supplementary General Conditions or Special Conditions. Failure to maintain insurance coverage, as required, is grounds for suspension of Work for cause pursuant to Article 14.

5.2.2 Coverage shall be written on an occurrence basis by companies authorized and admitted to do business in the State of Texas and rated A- or better by A.M. Best Company or similar rating company or otherwise acceptable to Owner.

5.2.2.1 Insurance Coverage Required.

5.2.2.1.1 Workers‟ Compensation. Insurance with limits as required by the Texas Workers‟ Compensation Act, with the policy endorsed to provide a waiver of subrogation as to Owner, employer's liability insurance of not less than:

$100,000 each accident;

$100,000 disease each employee; and

$500,000 disease policy limit.

5.2.2.1.2 Commercial General Liability Insurance. Including premises, operations, independent contractor's liability, products and completed operations and contractual liability, covering, but not limited to, the liability assumed under the indemnification provisions of this Contract, fully insuring Contractor's liability for bodily injury (including death) and property damage with a minimum limit of:

$1,000,000 per occurrence;

$2,000,000 general aggregate;

$2,000,000 products and completed operations aggregate; and

Coverage shall be on an "occurrence" basis.

The policy shall include coverage extended to apply to completed operations and explosion, collapse, and underground hazards. The policy shall include endorsement CG2503 Amendment of Aggregate Limits of Insurance (per Project) or its equivalent.

If the Work involves any activities within fifty (50) feet of any railroad, railroad protective insurance as may be required by the affected railroad, written for not less than the limits required by such railroad.

5.2.2.1.3 Asbestos Abatement Liability Insurance, including coverage for liability arising from the encapsulation, removal, handling, storage, transportation, and disposal of asbestos containing materials. *This requirement applies if the Work or the Project includes asbestos containing materials.

The combined single limit for bodily injury and property damage will be a minimum of $1,000,000 per occurrence.

*Specific requirement for claims-made form: Required period of coverage will be determined by the following formula: continuous coverage for life of the Contract, plus one (1) year (to provide coverage for the warranty period), and an extended discovery period for a minimum of five (5) years which shall begin at the end of the warranty period.

Employer's liability limits for asbestos abatement will be:

$500,000 each accident;

$500,000 disease each employee; and

$500,000 disease policy limit.

If this Contract is for asbestos abatement only, the all-risk builder's risk or all-risk installation floater (e) is not required.

5.2.2.1.4 Comprehensive Automobile Liability Insurance, covering owned, hired, and non-owned vehicles, with a minimum combined single limit for bodily injury (including death) and property damage of $1,000,000 per occurrence. No aggregate shall be permitted for this type of coverage.

Such insurance is to include coverage for loading and unloading hazards.

5.2.2.1.5 All-Risk Builder's Risk Insurance, if applicable (or all-risk installation floater for instances in which the project involves solely the installation of material and/or equipment). Coverage shall be all-risk, including, but not limited to, fire, extended coverage, vandalism and malicious mischief, theft and, if applicable, flood, earth movement and named storm. Builder's risk and installation floater limits shall be equal to 100 percent of the Contract Sum plus, if any, existing property and Owner-furnished equipment specified by Owner. The policy shall be written jointly in the names of Owner and Contractor. Subcontractors shall be named as additional insureds. The policy shall have endorsements as follows:

5.2.2.1.5.1 This insurance shall be specific as to coverage and not contributing insurance with any permanent insurance maintained on the property.

5.2.2.1.5.2 This insurance shall not contain an occupancy clause suspending or reducing coverage should Owner partially occupy the Site and before the parties have determined Substantial Completion.

5.2.2.1.5.3 Loss, if any, shall be adjusted with and made payable to Owner as trustee for the insureds as their interests may appear. Owner shall be named as loss payee.

5.2.2.1.5.4 For renovation projects or projects that involve portions of Work contained within an existing structure, refer to Supplementary General and Special Conditions for possible additional builder's risk insurance requirements.

5.2.2.1.5.5 For Owner furnished equipment or materials that will be in care, custody or control of Contractor, Contractor will be responsible for damage and loss.

5.2.2.1.5.6 For those properties located within a Tier 1 or 2 windstorm area, named storm coverage must be provided with limits specified by Owner.

5.2.2.1.5.7 For those properties located in flood prone areas, flood insurance coverage must be provided with limits specified by Owner.

5.2.2.1.5.8 Builder's risk insurance policy shall remain in effect until Substantial Completion.

5.2.2.1.6 "Umbrella" Liability Insurance. Contractor shall obtain, pay for and maintain umbrella liability insurance during the Contract term, insuring Contractor for an amount of not less than amount specified in the Supplementary General Conditions or Special Conditions that provides coverage at least as broad as and applies in excess and follows form of the primary liability coverages required hereinabove. The policy shall provide "drop down" coverage where underlying primary insurance coverage limits are insufficient or exhausted.

5.2.3 Policies must include the following clauses, as applicable:

5.2.3.1 This insurance shall not be canceled, materially changed, or non-renewed except after thirty (30) days written notice has been given to Owner.

5.2.3.2 It is agreed that Contractor's insurance shall be deemed primary with respect to any insurance or self-insurance carried by Owner for liability arising out of operations under the Contract with Owner.

5.2.3.3 Owner, its officials, directors, employees, representatives, and volunteers are added as additional insureds as respects operations and activities of, or on behalf of the named insured performed under Contract with Owner. The additional insured status must cover completed operations as well. This is not applicable to workers" compensation policies.

5.2.3.4 A waiver of subrogation in favor of Owner shall be provided in all policies.

524 Without limiting any of the other obligations or liabilities of Contractor, Contractor shall require each Subcontractor performing work under the Contract, at Subcontractor's own expense, to maintain during the term of the Contract, the same stipulated minimum insurance including the required provisions and additional policy conditions as shown above. As an alternative, Contractor may include its Subcontractors as additional insureds on its own coverage as prescribed under these requirements. Contractor's certificate of insurance shall note in such event that Subcontractors are included as additional insureds and that Contractor agrees to provide workers" compensation for Subcontractors and their employees. Contractor shall obtain and monitor the certificates of insurance from each Subcontractor in order to assure compliance with the insurance requirements. Contractor must retain the certificates of insurance for the duration of the Contract plus five (5) years and shall have the responsibility of enforcing these insurance requirements among its Subcontractors. Owner shall be entitled, upon request and without expense, to receive copies of these certificates.

525 Workers" compensation insurance coverage must meet the statutory requirements of Tex. Lab. Code § 401.011(44) and specific to construction projects for public entities as required by Tex. Lab. Code § 406.096.

Article 6. Construction Documents, Coordination Documents, and Record Documents

6.1 Drawings and Specifications.

6.1.1 Copies Furnished. Contractor will be furnished, free of charge, the number of complete sets of the Drawings, Specifications, and Addenda as provided in the Supplementary General Conditions or Special Conditions. Additional complete sets of Drawings and Specifications, if requested, will be furnished at reproduction cost to the one requesting such additional sets. Electronic copies of such documents will be provided to Contractor without charge.

6.1.2 Ownership of Drawings and Specifications. All Drawings, Specifications and copies thereof furnished by A/E are to remain A/E‟s property. These documents are not to be used on any other project, and with the exception of the Contract record set and electronic versions needed for warranty operations, are to be returned to the A/E, upon request, following completion of the Work.

6.1.3 Interrelation of Documents. The Contract Documents as referenced in the Contract between Owner and Contractor are complimentary, and what is required by one shall be as binding as if required by all.

6.1.4 Resolution of Conflicts in Documents. Where conflicts may exist within the Contract Documents, the documents shall govern in the following order: (a) Change Orders, addenda, and written amendments to the Contract; (b) the Contract; (c) Drawings; (d) Specifications (but Specifications shall control over Drawings as to quality of materials); and (e) other Contract Documents. Among other categories of documents having the same order of precedence, the term or provision that includes the latest date shall control. Contractor shall notify A/E and ODR for resolution of the issue prior to executing the Work in question.

6.1.5 Contractor’s Duty to Review Contract Documents. In order to facilitate its responsibilities for completion of the Work in accordance with and as reasonably inferable from the Contract Documents, prior to commencing the Work, Contractor shall examine and compare the Contract Documents, information furnished by Owner, relevant field measurements made by Contractor and any visible or reasonably anticipated conditions at the Site affecting the Work. This duty extends throughout the construction phase prior to commencing each particular work activity and/or system installation.

6.1.6 Discrepancies and Omissions in Drawings and Specifications.

6.1.6.1 Promptly report to ODR and to A/E the discovery of any apparent error, omission or inconsistency in the Contract Documents prior to execution of the Work.

6.1.6.2 It is recognized that Contractor is not acting in the capacity of a licensed design professional, unless it is performing as a Design-Build firm.

6.1.6.3 It is further recognized that Contractor's examination of Contract Documents is to facilitate construction and does not create an affirmative responsibility to detect errors, omissions or inconsistencies or to ascertain compliance with applicable laws, building codes or regulations, unless it is performing as a Design-Build firm or a Construction Manager-at-Risk.

6.1.6.4 When performing as a Design-Build firm, Contractor has sole responsibility for discrepancies, errors, and omissions in the Drawings and Specifications.

6.1.6.5 When performing as a Construction Manager-at-Risk, Contractor has a shared responsibility with A/E for discovery and resolution of discrepancies, errors, and omissions in the Contract Documents. In such case, Contractor's responsibility pertains to review, coordination, and recommendation of resolution strategies within budget constraints.

6.1.6.6 Contractor has no liability for errors, omissions, or inconsistencies unless Contractor knowingly failed to report a recognized problem to Owner or the Work is executed under a Design-Build or Construction Manager-at-Risk Contract as outlined above. Should Contractor fail to perform the examination and reporting obligations of these provisions, Contractor is responsible for avoidable costs and direct and/or consequential damages.

6.2 Requirements for Record Documents. Contractor shall:

6.2.1 Maintain at the Site one copy of all Drawings, Specifications, addenda, approved submittals, Contract modifications, and all Project correspondence. Keep current and maintain Drawings and Specifications in good order with postings and markings to record actual conditions of Work and show and reference all changes made during construction. Provide Owner and A/E access to these documents.

6.2.2 Maintain this record set of Drawings and Specifications which reflect the actual field conditions and representations of the Work performed, whether it be directed by addendum, Change Order or otherwise. Make available all records prescribed herein for reference and examination by Owner and its representatives and agents.

6.2.3 Update the Record Documents at least monthly prior to submission of periodic partial pay estimates. Failure to maintain current Record Documents constitutes cause for denial of a progress payment otherwise due.

6.2.4 Prior to requesting Substantial Completion inspection Contractor shall furnish a copy of its marked-up Record Documents and a preliminary copy of each instructional manual, maintenance and operating manual, parts catalog, wiring diagrams, spare parts, specified written warranties and like publications, or parts for all installed equipment, systems, and like items and as described in the Contract Documents.

6.2.5 Once determined acceptable by ODR with input from A/E, provide one (1) reproducible copy and one (1) electronic media copy of all Record Documents, unless otherwise required by the Supplementary General Conditions or Special Conditions.

6.2.6 Contractor shall be responsible for updating the Record Documents for all Contractor initiated documents and changes to the Contract Documents due to coordination and actual field conditions, including RFIs.

6.2.7 A/E shall be responsible for updating the Record Documents for any addenda, Change Orders, A/E supplemental instructions and any other alterations to the Contract Documents generated by A/E or Owner.

Article 7. Construction Safety

7.1 General. It is the duty and responsibility of Contractor and all of its Subcontractors to be familiar with, enforce and comply with all requirements of Public Law No. 91- 596, 29 U.S.C. § 651 et. seq., the Occupational Safety and Health Act of 1970, (OSHA) and all amendments thereto. Contractor shall prepare a safety plan specific to the Project and submit it to ODR and A/E prior to commencing Work. In addition, Contractor and all of its Subcontractors shall comply with all applicable laws and regulations of any public body having jurisdiction for safety of persons or property to protect them from damage, injury or loss and erect and maintain all necessary safeguards for such safety and protection.

7.2 Notices. Contractor shall provide notices as follows:

7.2.1 Notify owners of adjacent property including those that own or operate utility services and/or underground facilities, and utility owners, when prosecution of the Work may affect them or their facilities, and cooperate with them in the protection, removal, relocation and replacement, and access to their facilities and/or utilities.

7.2.2 Coordinate the exchange of material safety data sheets (MSDSs) or other hazard communication information required to be made available to or exchanged between or among employers at the site in connection with laws and regulations. Maintain a complete file of MSDSs for all materials in use on site throughout the construction phase and make such file available to Owner and its agents as requested.

7.3 Emergencies. In any emergency affecting the safety of persons or property, Contractor shall act to minimize, mitigate, and prevent threatened damage, injury or loss.

7.3.1 Have authorized agents of Contractor respond immediately upon call at any time of day or night when circumstances warrant the presence of Contractor to protect the Work or adjacent property from damage or to take such action pertaining to the Work as may be necessary to provide for the safety of the public.

7.3.2 Give ODR and A/E prompt notice of all such events.

7.3.3 If Contractor believes that any changes in the Work or variations from Contract Documents have been caused by its emergency response, promptly notify Owner within seventy-two (72) hours of the emergency response event.

7.3.4 Should Contractor fail to respond, Owner is authorized to direct other forces to take action as necessary and Owner may deduct any cost of remedial action from funds otherwise due Contractor.

7.4 Injuries. In the event of an incident or accident involving outside medical care for an individual on or near the Work, Contractor shall notify ODR and other parties as may be directed promptly, but no later than twenty-four (24) hours after Contractor learns that an event required medical care.

7.4.1 Record the location of the event and the circumstances surrounding it, by using photography or other means, and gather witness statements and other documentation which describes the event.

7.4.2 Supply ODR and A/E with an incident report no later than thirty-six (36) hours after the occurrence of the event. In the event of a catastrophic incident (one (1) fatality or three (3) workers hospitalized), barricade and leave intact the scene of the incident until all investigations are complete. A full set of incident investigation documents, including facts, finding of cause, and remedial plans shall be provided within one (1) week after occurrence, unless otherwise directed by legal counsel. Contractor shall provide ODR with written notification within one week of such catastrophic event if legal counsel delays submission of full report.

7.5 Environmental Safety. Upon encountering any previously unknown potentially hazardous material, or other materials potentially contaminated by hazardous material, Contractor shall immediately stop work activities impacted by the discovery, secure the affected area, and notify ODR immediately.

7.5.1 Bind all Subcontractors to the same duty.

7.5.2 Upon receiving such notice, ODR will promptly engage qualified experts to make such investigations and conduct such tests as may be reasonably necessary to determine the existence or extent of any environmental hazard. Upon completion of this investigation, ODR will issue a written report to Contractor identifying the material(s) found and indicate any necessary steps to be taken to treat, handle, transport or dispose of the material.

7.5.3 Owner may hire third-party Contractors to perform any or all such steps.

7.5.4 Should compliance with ODR's instructions result in an increase in Contractor's cost of performance, or delay the Work, Owner will make an equitable adjustment to the Contract Sum and/or the time of completion, and modify the Contract in writing accordingly.

7.6 Trenching Plan. When the project requires excavation which either exceeds a depth of four (4) feet, or results in any worker's upper body being positioned below grade level, Contractor is required to submit a trenching plan to ODR prior to commencing trenching operations unless an engineered plan is part of the Contract Documents. The plan is required to be prepared and sealed by a professional engineer registered in the State of Texas, and hired or employed by Contractor or Subcontractor to perform the work. Said engineer cannot be anyone who is otherwise either directly or indirectly engaged on this project.

Article 8. Quality Control

8.1 Materials & Workmanship. Contractor shall execute Work in a good and workmanlike matter in accordance with the Contract Documents. Contractor shall develop and provide a quality control plan specific to this Project and acceptable to Owner. Where Contract Documents do not specify quality standards, complete and construct all Work in compliance with generally accepted construction industry standards. Unless otherwise specified, incorporate all new materials and equipment into the Work under the Contract.

8.2 Testing.

8.2.1 Owner is responsible for coordinating and paying for routine and special tests required to confirm compliance with quality and performance requirements, except as stated below or otherwise required by the Contract Documents. Contractor shall provide the following testing:

8.2.1.1 Any test of basic material or fabricated equipment included as part of a submittal for a required item in order to establish compliance with the Contract Documents.

8.2.1.2 Any test of basic material or fabricated equipment offered as a substitute for a specified item on which a test may be required in order to establish compliance with the Contract Documents.

8.2.1.3 Preliminary, start-up, pre-functional and operational testing of building equipment and systems as necessary to confirm operational compliance with requirements of the Contract Documents.

8.2.1.4 All subsequent tests on original or replaced materials conducted as a result of prior testing failure.

8.2.2 All testing shall be performed in accordance with standard test procedures by an accredited laboratory, or special consultant as appropriate, acceptable to Owner. Results of all tests shall be provided promptly to ODR, A/E, and Contractor.

8.2.3 Non-Compliance (Test Results). Should any of the tests indicate that a material and/or system does not comply with the Contract requirements, the burden of proof remains with Contractor, subject to:

8.2.3.1 Contractor selection and submission of the laboratory for Owner acceptance.

8.2.3.2 Acceptance by Owner of the quality and nature of tests.

8.2.3.3 All tests taken in the presence of A/E and/or ODR, or their representatives.

8.2.3.4 If tests confirm that the material/systems comply with Contract Documents, Owner will pay the cost of the test.

8.2.3.5 If tests reveal noncompliance, Contractor will pay those laboratory fees and costs of that particular test and all future tests, of that failing Work, necessary to eventually confirm compliance with Contract Documents.

8.2.3.6 Proof of noncompliance with the Contract Documents will make Contractor liable for any corrective action which ODR determines appropriate, including complete removal and replacement of non-compliant work or material.

8.2.4 Notice of Testing. Contractor shall give ODR and A/E timely notice of its readiness and the date arranged so ODR and A/E may observe such inspection, testing, or approval.

8.2.5 Test Samples. Contractor is responsible for providing Samples of sufficient size for test purposes and for coordinating such tests with their Work Progress Schedule to avoid delay.

8.2.6 Covering Up Work. If Contractor covers up any Work without providing Owner an opportunity to inspect, Contractor shall, if requested by ODR, uncover and recover the work at Contractor's expense.

8.3 Submittals.

8.3.1 Contractor's Submittals. Contractor shall submit with reasonable promptness consistent with the Project schedule and in orderly sequence all Shop Drawings, Samples, or other information required by the Contract Documents, or subsequently required by Change Order. Prior to submitting, Contractor shall review each submittal for general compliance with Contract Documents and approve submittals for review by A/E and Owner by an approval stamp affixed to each copy. Submittal data presented without Contractor's stamp will be returned without review or comment, and any delay resulting from failure is Contractor's responsibility.

8.3.1.1 Contractor shall within twenty-one (21) days of the effective date of the Notice To Proceed with construction, submit to ODR and A/E, a submittal schedule/register, organized by specification section, listing all items to be furnished for review and approval by A/E and Owner. The list shall include Shop Drawings, manufacturer's literature, certificates of compliance, materials Samples, materials colors, guarantees, and all other items identified throughout the Specifications.

8.3.1.2 Contractor shall indicate the type of item, Contract requirements reference, and Contractor's scheduled dates for submitting the item along with the requested dates for approval answers from A/E and Owner. The submittal register shall indicate the projected dates for procurement of all included items and shall be updated at least monthly with actual approval and procurement dates. Contractor's Submittal Register must be reasonable in terms of the review time for complex submittals. Contractor's submittal schedule must be consistent with the Work Progress Schedule and identify critical submittals. Show and allow a minimum of fifteen (15) days duration after receipt by A/E and ODR for review and approval. If re- submittal required, allow a minimum of an additional fifteen (15) days for review. Submit the updated Submittal Register with each request for progress payment. Owner may establish routine review procedures and schedules for submittals at the preconstruction conference and/or elsewhere in the Contract Documents. If Contractor fails to update and provide the Submittal Register as required, Owner may, after seven (7) days' notice to Contractor withhold a reasonable sum of money that would otherwise be due Contractor.

8.3.1.3 Contractor shall coordinate the Submittal Register with the Work Progress Schedule. Do not schedule Work requiring a submittal to begin prior to scheduling review and approval of the related submittal. Revise and/or update both schedules monthly to ensure consistency and current project data. Provide to ODR the updated Submittal Register and schedule with each application for progress payment. Refer to requirements for the Work Progress Schedule for inclusion of procurement activities therein. Regardless, the Submittal Register shall identify dates submitted and returned and shall be used to confirm status and disposition of particular items submitted, including approval or other action taken and other information not conveniently tracked through the Work Progress Schedule.

8.3.1.4 By submitting Shop Drawings, Samples or other required information, Contractor represents that it has determined and verified all applicable field measurements, field construction criteria, materials, catalog numbers and similar data; and has checked and coordinated each Shop Drawing and Sample with the requirements of the Work and the Contract Documents.

832 Review of Submittals. A/E and ODR review is only for conformance with the design concept and the information provided in the Contract Documents. Responses to submittals will be in writing. The approval of a separate item does not indicate approval of an assembly in which the item functions. The approval of a submittal does not relieve Contractor of responsibility for any

deviation from the requirements of the Contract unless Contractor informs A/E and ODR of such deviation in a clear, conspicuous, and written manner on the submittal transmittal and at the time of submission, and obtains Owner's written specific approval of the particular deviation.

8.3.3 Correction and Resubmission. Contractor shall make any corrections required to a submittal and resubmit the required number of corrected copies promptly so as to avoid delay, until submittal approval. Direct attention in writing to A/E and ODR, when applicable, to any new revisions other than the corrections requested on previous submissions.

8.3.4 Limits on Shop Drawing Review. Contractor shall not commence any Work requiring a submittal until review of the submittal under Subsection 8.3.2. Construct all such work in accordance with reviewed submittals. Comments incorporated as part of the review in Subsection 8.3.2 of Shop Drawings and Samples is not authorization to Contractor to perform extra work or changed work unless authorized through a Change Order. A/E's and ODR's review, if any, does not relieve Contractor from responsibility for defects in the Work resulting from errors or omissions of any kind on the submittal, regardless of any approval action.

8.3.5 No Substitutions Without Approval. ODR and A/E may receive and consider Contractor's request for substitution when Contractor agrees to reimburse Owner for review costs and satisfies the requirements of this section. If Contractor does not satisfy these conditions, ODR and A/E will return the request without action except to record noncompliance with these requirements. Owner will not consider the request if Contractor cannot provide the product or method because of failure to pursue the Work promptly or coordinate activities properly. Contractor's request for a substitution may be considered by ODR and A/E when:

8.3.5.1 The Contract Documents do not require extensive revisions; and

8.3.5.2 Proposed changes are in keeping with the general intent of the Contract Documents and the design intent of A/E and do not result in an increase in cost to Owner; and

8.3.5.3 The request is timely, fully documented, properly submitted and one or more of the following apply:

8353.1 Contractor cannot provide the specified product, assembly or method of construction within the Contract Time;

83532 The request directly relates to an "or-equal" clause or similar language in the Contract Documents;

8.3.5.3 The request directly relates to a "product design standard" or "performance standard" clause in the Contract Documents;

8.3.5.4 The requested substitution offers Owner a substantial advantage in cost, time, energy conservation or other considerations, after deducting additional responsibilities Owner must assume;

8.3.5.5 The specified product or method of construction cannot receive necessary approval by an authority having jurisdiction, and ODR can approve the requested substitution;

8.3.5.6 Contractor cannot provide the specified product, assembly or method of construction in a manner that is compatible with other materials and where Contractor certifies that the substitution will overcome the incompatibility;

8.3.5.7 Contractor cannot coordinate the specified product, assembly or method of construction with other materials and where Contractor certifies they can coordinate the proposed substitution; or

8.3.5.8 The specified product, assembly or method of construction cannot provide a warranty required by the Contract Documents and where Contractor certifies that the proposed substitution provides the required warranty.

8.3.6 Unauthorized Substitutions at Contractor's Risk. Contractor is financially responsible for any additional costs or delays resulting from unauthorized substitution of materials, equipment or fixtures other than those specified. Contractor shall reimburse Owner for any increased design or contract administration costs resulting from such unauthorized substitutions.

8.4 Field Mock-up.

8.4.1 Mock-ups shall be constructed prior to commencement of a specified scope of work to confirm acceptable workmanship.

8.4.1.1 As a minimum, field mock-ups shall be constructed for roofing systems, exterior veneer / finish systems, glazing systems, and any other Work requiring a mock-up as identified throughout the Contract Documents. Mock-ups for systems not part of the Project scope shall not be required.

8.4.1.2 Mock-ups may be incorporated into the Work if allowed by the Contract Documents and if acceptable to ODR. If mock-ups are freestanding, they shall remain in place until otherwise directed by Owner.

8.4.1.3 Contractor shall include field mock-ups in their Work Progress Schedule and shall notify ODR and A/E of readiness for review sufficiently in advance to coordinate review without delay.

8.5 Inspection During Construction.

8.5.1 Contractor shall provide sufficient, safe, and proper facilities, including equipment as necessary for safe access, at all reasonable times for observation and/or inspection of the Work by Owner and its agents.

8.5.2 Contractor shall not cover up any Work with finishing materials or other building components prior to providing Owner and its agents an opportunity to perform an inspection of the Work.

8.5.2.1 Should corrections of the Work be required for approval, Contractor shall not over up corrected Work until Owner indicates approval.

8.5.2.2 Contractor shall provide notification of at least five (5) working days or otherwise as mutually agreed, to ODR of the anticipated need for a cover-up inspection. Should ODR fail to make the necessary inspection within the agreed period, Contractor may proceed with cover-up Work, but is not relieved of responsibility for Work to comply with requirements of the Contract Documents.

Article 9. Construction Schedules

9.1 Contract Time. **TIME IS AN ESSENTIAL ELEMENT OF THE CONTRACT**. The Contract Time is the time between the dates indicated in the Notice to Proceed for commencement of the Work and for achieving Substantial Completion. The Contract Time can be modified only by Change Order. Failure to achieve Substantial Completion within the Contract Time as otherwise agreed to in writing will cause damage to Owner and may subject Contractor to liquidated damages as provided in the Contract Documents. If Contractor fails to achieve Final Completion in a reasonable time after Substantial Completion, Contractor shall be responsible for Owner's additional inspection, project management, and maintenance cost to the extent caused by Contractor's failure to achieve Final Completion.

9.2 Notice to Proceed. Owner will issue a Notice to Proceed which shall state the dates for beginning Work and for achieving Substantial Completion of the Work.

9.3 Work Progress Schedule. Refer to Supplementary General Conditions or Special Conditions for additional schedule requirements. Unless indicated otherwise in those documents, Contractor shall submit their initial Work Progress Schedule for the Work in relation to the entire Project not later than twenty-one (21) days after the effective date of the Notice to Proceed to ODR and A/E. Unless otherwise indicated in the Contract Documents, the Work Progress Schedule shall be computerized Critical Path Method (CPM) with fully editable logic. This initial schedule shall indicate the dates for starting and completing the various aspects required to complete the Work, including mobilization, procurement, installation, testing, inspection, delivery of Close-out Documents and acceptance of all the Work of the Contract. When acceptable to Owner, the initially accepted schedule shall be the Baseline Schedule for comparison to actual conditions throughout the Contract duration.

9.3.1 Schedule Requirements. Contractor shall submit electronic and paper copy of the initial Work Progress Schedule reflecting accurate and reliable representations of the planned progress of the Work, the Work to date if any, and of Contractor's actual plans for its completion. Contractor shall organize and provide adequate detail so the schedule is capable of measuring and forecasting the effect of delaying events on completed and uncompleted activities.

9.3.1.1 Contractor shall re-submit initial schedule as required to address review comments from A/E and ODR until such schedule is accepted as the Baseline Schedule.

9.3.1.2 Submittal of a schedule, schedule revision or schedule update constitutes Contractor's representation to Owner of the accurate depiction of all progress to date and that Contractor will follow the schedule as submitted in performing the Work.

9.3.2 Schedule Updates. Contractor shall update the Work Progress Schedule and the Submittal Register monthly, as a minimum, to reflect progress to date and current plans for completing the Work, while maintaining original schedule as Baseline Schedule and submit paper and electronic copies of the update to A/E and ODR as directed, but as a minimum with each request for payment. Owner has no duty to make progress payments unless accompanied by the updated Work Progress Schedule. Show the anticipated date of completion reflecting all extensions of time granted through Change Order as of the date of the update. Contractor may revise the Work Progress Schedule when in Contractor's judgment it becomes necessary for the management of the Work. Contractor shall identify all proposed changes to schedule logic to Owner and to A/E via an executive summary accompanying the updated schedule for review prior to final implementation of revisions into a revised Baseline Schedule. Schedule changes that materially impact Owner's operations shall be communicated promptly to ODR and shall not be incorporated into the revised Baseline Schedule without ODR"s consent.

9.3.3 The Work Progress Schedule is for Contractor's use in managing the Work and submittal of the schedule, and successive updates or revisions, is for the information of Owner and to demonstrate that Contractor has complied with requirements for planning the Work. Owner's acceptance of a schedule, schedule update or revision constitutes Owner's agreement to coordinate its own activities with Contractor's activities as shown on the schedule.

9.3.3.1 Acceptance of the Work Progress Schedule, or update and/or revision thereto does not indicate any approval of Contractor's proposed sequences and duration.

9.3.3.2 Acceptance of a Work Progress Schedule update or revision indicating early or late completion does not constitute Owner's consent, alter the terms of the Contract, or waive either Contractor's responsibility for timely completion or Owner's right to damages for Contractor's failure to do so.

9.3.3.3 Contractor's scheduled dates for completion of any activity or the entire Work do not constitute a change in terms of the Contract. Change Orders are the only method of modifying the Substantial Completion Date(s) and Contract Time.

9.4 Ownership of Float. Unless indicated otherwise in the Contract Documents, Contractor shall develop its schedule, pricing, and execution plan to provide a minimum of ten (10) percent total float at acceptance of the Baseline Schedule. Float time contained in the Work Progress Schedule is not for the exclusive benefit of Contractor or Owner, but belongs to the Project and may be consumed by either party as needed on a first-used basis.

9.5 Completion of Work. Contractor is accountable for completing the Work within the Contract Time stated in the Contract, or as otherwise amended by Change Order.

9.5.1 If, in the judgment of Owner, the work is behind schedule and the rate of placement of work is inadequate to regain scheduled progress to ensure timely completion of the entire work or a separable portion thereof, Contractor, when so informed by Owner, shall immediately take action to increase the rate of work placement by:

9.5.1.1 An increase in working forces.

9.5.1.2 An increase in equipment or tools.

9.5.1.3 An increase in hours of work or number of shifts.

9.5.1.4 Expedite delivery of materials.

9.5.1.5 Other action proposed if acceptable to Owner.

9.5.2 Within ten (10) days after such notice from ODR, Contractor shall notify ODR in writing of the specific measures taken and/or planned to increase the rate of progress. Contactor shall include an estimate as to the date of scheduled progress recovery and an updated Work Progress Schedule illustrating Contractor's plan for achieving timely completion of the Project. Should ODR deem the plan of action inadequate, Contractor shall take additional steps or make adjustments as necessary to its plan of action until it meets with ODR"s approval.

9.6 Modification of the Contract Time.

9.6.1 Delays and extension of time as hereinafter described are valid only if executed in accordance with provisions set forth in Article 11.

9.6.2 When a delay defined herein as excusable prevents Contractor from completing the Work within the Contract Time, Contractor is entitled to an extension of time. Owner will make an equitable adjustment and extend the number of days lost because of excusable delay or Weather Days, as measured by Contractor's progress schedule. All extensions of time will be granted in calendar days. In no event, however, will an extension of time be granted for delays that merely extend the duration of non-critical activities, or which only consume float without delaying the project Substantial Completion date(s).

9.6.2.1 A "Weather Day" is a day on which Contractor's current schedule indicates Work is to be done, and on which inclement weather and related site conditions prevent Contractor from performing seven (7) continuous hours of Work between the hours of 7:00 a.m. and 6:00 p.m. Weather days are excusable delays. When weather conditions at

the site prevent work from proceeding, Contractor shall immediately notify ODR for confirmation of the conditions. At the end of each calendar month, submit to ODR and A/E a list of Weather Days occurring in that month along with documentation of the impact on critical activities. Based on confirmation by ODR, any time extension granted will be issued by Change Order. If Contractor and Owner cannot agree on the time extension, Owner may issue a ULCO for fair and reasonable time extension.

9.6.2.2 Excusable Delay. Contractor is entitled to an equitable adjustment of the Contract Time, issued via change order, for delays caused by the following:

9.6.2.2.1 Errors, omissions and imperfections in design, which A/E corrects by means of changes in the Drawings and Specifications.

9.6.2.2.2 Unanticipated physical conditions at the Site, which A/E corrects by means of changes to the Drawings and Specifications or for which ODR directs changes in the Work identified in the Contract Documents.

9.6.2.2.3 Changes in the Work that effect activities identified in Contractor's schedule as "critical" to completion of the entire Work, if such changes are ordered by ODR or recommended by A/E and ordered by ODR.

9.6.2.2.4 Suspension of Work for unexpected natural events (sometimes called "acts of God"), civil unrest, strikes or other events which are not within the reasonable control of Contractor.

9.6.2.2.5 Suspension of Work for convenience of ODR, which prevents Contractor from completing the Work within the Contract Time.

9.6.3 Contractor's relief in the event of such delays is the time impact to the critical path as determined by analysis of Contractor's schedule. In the event that Contractor incurs additional direct costs because of the excusable delays other than described in Subparagraph 9.6.2.2.4 and within the reasonable control of Owner, the Contract price and Contract Time are to be equitably adjusted by Owner pursuant to the provisions of Article 11.

9.7 No Damages for Delay. Contractor has no claim for monetary damages for delay or hindrances to the work from any cause, including without limitation any act or omission of Owner.

9.8 Concurrent Delay. When the completion of the Work is simultaneously delayed by an excusable delay and a delay arising from a cause not designated as excusable, Contractor may not be entitled to a time extension for the period of concurrent delay.

9.9 Other Time Extension Requests. Time extensions requested in association with changes to the Work directed or requested by Owner shall be included with Contractor's proposed costs for such change. Time extensions requested for inclement weather are covered by Paragraph 9.6.2.1 above. If Contractor believes that the completion of the Work is delayed by a circumstance other than for changes directed to the Work or weather, they shall give ODR written notice, stating the nature of the delay and the activities potentially affected, within five (5) days after the onset of the event or circumstance giving rise to the excusable delay. Contractor shall provide sufficient written evidence to document the delay. In the case of a continuing cause of delay, only one claim is necessary. State claims for extensions of time in numbers of whole or half days.

9.9.1 Within ten (10) days after the cessation of the delay, Contractor shall formalize its request for extension of time in writing to include a full analysis of the schedule impact of the delay and substantiation of the excusable nature of the delay. All changes to the Contract Time or made as a result of such claims is by Change Order, as set forth in Article 11.

9.9.2 No extension of time releases Contractor or the Surety furnishing a performance or payment bond from any obligations under the Contract or such a bond. Those obligations remain in full force until the discharge of the Contract.

9.9.3 Contents of Time Extension Requests. Contractor shall provide with each Time Extension Request a quantitative demonstration of the impact of the delay on project completion time, based on the Work Progress Schedule. Contractor shall include with Time Extension Requests a reasonably detailed narrative setting forth:

9.9.3.1 The nature of the delay and its cause; the basis of Contractor's claim of entitlement to a time extension.

9.9.3.2 Documentation of the actual impacts of the claimed delay on the critical path indicated in Contractor's Work Progress Schedule, and any concurrent delays.

9.9.3.3 Description and documentation of steps taken by Contractor to mitigate the effect of the claimed delay, including, when appropriate, the modification of the Work Progress Schedule.

9.9.4 Owner's Response. Owner will respond to the Time Extension Request by providing to Contractor written notice of the number of days granted, if any, and giving its reason if this number differs from the number of days requested by Contractor.

9.9.4.1 Owner will not grant time extensions for delays that do not affect the Contract Substantial Completion date.

9.9.4.2 Owner will respond to each properly submitted Time Extension Request within fifteen (15) days following receipt. If Owner cannot reasonably make a determination about Contractor's entitlement to a time extension within that time, Owner will notify Contractor in writing. Unless otherwise agreed by Contractor, Owner has no more than fifteen (15) additional days to prepare a final response. If Owner fails to respond within forty-five (45) days from the date the Time Extension Request is received, Contractor is entitled to a time extension in the amount requested.

9.10 Failure to Complete Work Within the Contract Time. **TIME IS AN ESSENTIAL ELEMENT OF THE CONTRACT.** Contractor's failure to substantially complete the Work within the Contract Time or to achieve Substantial Completion as required will cause damage to Owner. These damages shall be liquidated by agreement of Contractor and Owner, in the amount per day as set forth in the Contract Documents.

9.11 Liquidated Damages. Owner may collect liquidated damages due from Contractor directly or indirectly by reducing the Contract Sum in the amount of liquidated damages stated in the Supplementary General Conditions or Special Conditions.

Article 10. Payments

10.1 Schedule of Values. Contractor shall submit to ODR and A/E for acceptance a Schedule of Values accurately itemizing material and labor for the various classifications of the Work based on the organization of the specification sections and of sufficient detail acceptable to ODR. The accepted Schedule of Values will be the basis for the progress payments under the Contract.

10.1.1 No progress payments will be made prior to receipt and acceptance of the Schedule of Values, provided in such detail as required by ODR, and submitted not less than twenty-one (21) days prior to the first request for payment. The Schedule of Values shall follow the order of trade divisions of the Specifications and include itemized costs for general conditions, costs for preparing close out documents, fees, contingencies, and Owner cash allowances, if applicable, so that the sum of the items will equal the Contract price. As appropriate, assign each item labor and/or material values, the subtotal thereof equaling the value of the work in place when complete.

10.1.1.1 Owner requires that the Work items be inclusive of the cost of the Work items only. Any contract markups for overhead and profit, general conditions, etc., shall be contained within separate line items for those specific purposes which shall be divided into at least two (2) lines, one (1) for labor and one (1) for materials.

10.1.2 Contractor shall retain a copy of all worksheets used in preparation of its bid or proposal, supported by a notarized statement that the worksheets are true and complete copies of the documents used to prepare the bid or proposal. Make the worksheets available to ODR at the time of Contract execution. Thereafter Contractor shall grant Owner during normal business hours access to said copy of worksheets at any time during the period commencing upon execution of the Contract and ending one year after final payment.

10.2. Progress Payments. Contractor will receive periodic progress payments for Work performed, materials in place, suitably stored on Site, or as otherwise agreed to by Owner and Contractor. Payment is not due until receipt by ODR or his designee of a correct and complete Pay Application in electronic and/or hard copy format as set forth in Supplementary General Conditions, Special Conditions, and certified by A/E. Progress payments are made provisionally and do not constitute acceptance of work not in accordance with the Contract Documents. Owner will not process progress payment applications for Change Order Work until all parties execute the Change Order.

10.2.1 Preliminary Pay Worksheet. Once each month that a progress payment is to be requested, the Contractor shall submit to A/E and ODR a complete, clean copy of a preliminary pay worksheet or preliminary pay application, to include the following:

10.2.1.1 Contractor's estimate of the amount of Work performed, labor furnished and materials incorporated into the Work, using the established Schedule of Values;

10.2.1.2 An updated Work Progress Schedule including the executive summary and all required schedule reports;

10.2.1.3 HUB subcontracting plan Progress Assessment Report as required in Paragraph 4.2.5.1;

10.2.1.4 Such additional documentation as Owner may require as set forth in the Supplementary General Conditions or elsewhere in the Contract Documents; and

10.2.1.5 Construction payment affidavit.

10.2.2 Contractor's Application for Payment. As soon as practicable, but in no event later than seven (7) days after receipt of the preliminary pay worksheet, A/E and ODR will meet with Contractor to review the preliminary pay worksheet and to observe the condition of the Work. Based on this review, ODR and A/E may require modifications to the preliminary pay worksheet prior to the submittal of an Application for Payment, and will promptly notify Contractor of revisions necessary for approval. As soon as practicable, Contractor shall submit its Application for Payment on the appropriate and completed form, reflecting the required modifications to the Schedule of Values required by A/E and/or ODR. Attach all additional documentation required by ODR and/or A/E, as well as an affidavit affirming that all payrolls, bills for labor, materials, equipment, subcontracted work and other indebtedness connected with Contractor's Application for Payment are paid or will be paid within the time specified in Tex. Gov't Code, Chapter 2251. No Application for Payment is complete unless it fully reflects all required modifications, and attaches all required documentation including Contractor's affidavit.

10.2.3 Certification by Architect/Engineer. Within five (5) days or earlier following A/E's receipt of Contractor's formal Application for Payment, A/E will review the Application for Payment for completeness, and forward it to ODR. A/E will certify that the application is complete and payable, or that it is incomplete, stating in particular what is missing. If the Application for Payment is incomplete, Contractor shall make the required corrections and resubmit the Application for Payment for processing.

10.3 Owner's Duty to Pay. Owner has no duty to pay the Contractor except on receipt by ODR of: 1) a complete Application for Payment certified by A/E; 2) Contractor's updated Work Progress Schedule; and 3) confirmation that Contractor's record documentation at the Site is kept current.

10.3.1 Payment for stored materials and/or equipment confirmed by Owner and A/E to be on-site or otherwise properly stored is limited to eighty-five (85) percent of the invoice price or eighty-five (85) percent of the scheduled value for the materials or equipment, whichever is less.

10.3.2 Retainage. Owner will withhold from each progress payment, as retainage, five (5) percent of the total earned amount, the amount authorized by law, or as otherwise set forth in the Supplementary General Conditions or Special Conditions. Retainage is managed in conformance with Tex. Gov't Code, Chapter 2252, Subchapter B.

10.3.2.1 Contractor shall provide written consent of its surety for any request for reduction or release of retainage.

10.3.2.2 At least sixty-five (65) percent of the Contract, or such other discrete Work phase as set forth in Subsection 12.1.6 or Work package delineated in the Contract Documents, must be completed before Owner can consider a retainage reduction or release.

10.3.2.3 Contractor shall not withhold retainage from their Subcontractors and suppliers in amounts that are any percentage greater than that withheld in its Contract with Owner under this subsection, unless otherwise acceptable to Owner.

10.3.3 Price Reduction to Cover Loss. Owner may reduce any Application for Payment, prior to payment to the extent necessary to protect Owner from loss on account of actions of Contractor including, but not limited to, the following:

10.3.3.1 Defective or incomplete Work not remedied;

10.3.3.2 Damage to Work of a separate Contractor;

10.3.3.3 Failure to maintain scheduled progress or reasonable evidence that the Work will not be completed within the Contract Time;

10.3.3.4 Persistent failure to carry out the Work in accordance with the Contract Documents;

10.3.3.5 Reasonable evidence that the Work cannot be completed for the unpaid portion of the Contract Sum;

10.3.3.6 Assessment of fines for violations of prevailing wage rate law; or

10.3.3.7 Failure to include the appropriate amount of retainage for that periodic progress payment.

10.3.4 Title to all material and Work covered by progress payments transfers to Owner upon payment.

10.3.4.1 Transfer of title to Owner does not relieve Contractor and its Subcontractors of the sole responsibility for the care and protection of materials and Work upon which payments have been made until final acceptance, or the restoration of any damaged Work, or waive the right of Owner to require the fulfillment of all the terms of the Contract.

10.4 Progress Payments. Progress payments to Contractor do not release Contractor or its surety from any obligations under the Contract.

10.4.1 Upon Owner's request, Contractor shall furnish manifest proof of the status of Subcontractor's accounts in a form acceptable to Owner.

10.4.2 Pay estimate certificates must be signed by a corporate officer or a representative duly authorized by Contractor.

10.4.3 Provide copies of bills of lading, invoices, delivery receipts or other evidence of the location and value of such materials in requesting payment for materials.

10.4.4 For purposes of Tex. Gov't Code § 2251.021(a)(2), the date the performance of service is complete is the date when ODR approves the Application for Payment.

10.5 Off-Site Storage. With prior approval by Owner and in the event, Contractor elects to store materials at an off-site location, abide by the following conditions, unless otherwise agreed to in writing by Owner.

10.5.1 Store materials in a commercial warehouse meeting the criteria stated below.

10.5.2 Provide insurance coverage adequate not only to cover materials while in storage, but also in transit from the off-site storage areas to the Project Site. Copies of duly authenticated certificates of insurance, made out to insure the State agency which is signatory to the Contract, must be filed with Owner's representative.

10.5.3 Inspection by Owner's representative is allowed at any time. Owner's inspectors must be satisfied with the security, control, maintenance, and preservation measures.

10.5.4 Materials for this Project are physically separated and marked for the Project in a sectioned-off area. Only materials which have been approved through the submittal process are to be considered for payment.

10.5.5 Owner reserves the right to reject materials at any time prior to final acceptance of the complete Contract if they do not meet Contract requirements regardless of any previous progress payment made.

10.5.6 With each monthly payment estimate, submit a report to ODR and A/E listing the quantities of materials already paid for and still stored in the off-site location.

10.5.7 Make warehouse records, receipts and invoices available to Owner's representatives, upon request, to verify the quantities and their disposition.

10.5.8 In the event of Contract termination or default by Contractor, the items in storage off-site, upon which payment has been made, will be promptly turned over to Owner or Owner's agents at a location near the jobsite as directed by ODR. The full provisions of performance and payment bonds on this Project cover the materials off-site in every respect as though they were stored on the Project Site.

10.6 Time for Payment by Contractor Pursuant to Tex. Gov't Code § 2255.022.

10.6.1 Contractor who receives a payment from a governmental entity shall pay Subcontractor the appropriate share of the payment not later than the tenth (10th) day after the date the vendor receives the payment.

10.6.2 The appropriate share is overdue on the eleventh (11th) day after the date Contractor receives the payment.

Article 11. Changes

11.1 Change Orders. A Change Order issued after execution of the Contract is a written order to Contractor, signed by ODR, Contractor, and A/E, authorizing a change in the Work or an adjustment in the Contract Sum or the Contract Time. The Contract Sum and the Contract Time can only be changed by Change Order. A Change Order signed by Contractor indicates his agreement therewith, including the adjustment in the Contract Sum and/or the Contract Time. ODR may issue a written authorization for Contractor to proceed with Work of a Change Order in advance of final execution by all parties in accordance with Section 11.9.

11.1.1 Owner, without invalidating the Contract, may order changes in the Work within the general scope of the Contract consisting of additions, deletions or other revisions, and the Contract Sum and the Contract Time will be adjusted accordingly. All such changes in the Work shall be authorized by Change Order or ULCO, and shall be performed under the applicable conditions of the Contract Documents. If such changes cause an increase or decrease in Contractor's cost of, or time required for, performance of the Contract, an equitable adjustment shall be made and confirmed in writing in a Change Order or a ULCO.

11.1.2 It is recognized by the parties hereto and agreed by them that the Specifications and Drawings may not be complete or free from errors, omissions and imperfections or that they may require changes or additions in order for the Work to be completed to the satisfaction of Owner and that, accordingly, it is the express intention of the parties, notwithstanding any other provisions in this Contract, that any errors, omissions or imperfections in such Specifications and Drawings, or any changes in or additions to same or to the Work ordered by Owner and any resulting delays in the Work or increases in Contractor's costs and expenses arising out of such errors, shall not constitute or give rise to any claim, demand or cause of action of any nature whatsoever in favor of Contractor, whether for breach of Contract, or otherwise; provided, however, that Owner shall be liable to Contractor for the sum stated to be due Contractor in any Change Order approved and signed by both parties, it being agreed hereby that such sum, together with any extension of time contained in said Change Order, shall constitute full compensation to Contractor for all costs, expenses and damages to Contractor, as permitted under Tex. Gov't Code, Chapter 2260.

11.1.3 Procedures for administration of Change Orders shall be established by Owner and stated in Supplementary General Conditions, Special Conditions, or elsewhere in the Contract Documents.

11.1.4 No verbal order, verbal statement, or verbal direction of Owner or his duly appointed representative shall be treated as a change under this article or entitle Contractor to an adjustment.

11.1.5 Contractor agrees that Owner or any of its duly authorized representatives shall have access and the right to examine any directly pertinent books, documents, papers, and records of Contractor. Further, Contractor agrees to include in all its subcontracts a provision to the effect that Subcontractor agrees that Owner or any of its duly authorized representatives shall have access to and the right to examine any directly pertinent books, documents, papers and records of such Subcontractor relating to any claim arising from the Contract, whether or not the Subcontractor is a party to the claim. The period of access and examination described herein which relates to appeals under the Disputes article of the Contract, litigation, or the settlement of claims arising out of the performance of the Contract shall continue until final disposition of such claims, appeals or litigation.

11.2 Unit Prices. If unit prices are stated in the Contract Documents or subsequently agreed upon, and if the quantities originally contemplated are so changed in a Proposed Change Order that application of the agreed unit prices to the quantities of work proposed will cause substantial inequity to Owner or Contractor, the applicable unit prices shall be equitably adjusted as provided in the Supplementary General Conditions or Special Conditions or as agreed to by the parties and incorporated into a Change Order.

11.3 Claims for Additional Costs.

11.3.1 If Contractor wishes to make a claim for an increase in the Contract Sum not related to a requested change, they shall give Owner and A/E written notice thereof within twenty-one (21) days after the occurrence of the event giving rise to such claim, but in any case, before proceeding to execute the Work considered to be additional cost or time, except in an emergency endangering life or property in which case Contractor shall act in accordance with Subsection 7.2.1. No such claim shall be valid unless so made. If Owner and Contractor cannot agree on the amount of the adjustment in the Contract Sum, it shall be determined as set forth under Article 15. Any change in the Contract Sum resulting from such claim shall be authorized by a Change Order or a ULCO.

11.3.2 If Contractor claims that additional cost is involved because of, but not limited to, 1) any written interpretation of the Contract Documents, 2) any order by Owner to stop the Work pursuant to Article 14 where Contractor was not at fault, or 3) any written order for a minor change in the Work issued pursuant to Section 11.4, Contractor shall make such claim as provided in Subsection 11.3.1.

11.3.3 Should Contractor or his Subcontractors fail to call attention of A/E to discrepancies or omissions in the Contract Documents, but claim additional costs for corrective Work after Contract award, Owner may assume intent to circumvent competitive bidding for necessary corrective Work. In such case,

Owner may choose to let a separate Contract for the corrective Work, or issue a ULCO to require performance by Contractor. Claims for time extensions or for extra cost resulting from delayed notice of patent Contract Document discrepancies or omissions will not be considered by Owner.

11.4 Minor Changes. A/E, with concurrence of ODR, will have authority to order minor changes in the Work not involving an adjustment in the Contract Sum or an extension of the Contract Time. Such changes shall be effected by written order which Contractor shall carry out promptly and record on as-built record documents.

11.5 Concealed Site Conditions. Contractor is responsible for visiting the Site and being familiar with local conditions such as the location, accessibility, and general character of the Site and/or building. If, in the performance of the Contract, subsurface, latent, or concealed conditions at the Site are found to be materially different from the information included in the Contract Documents, or if unknown conditions of an unusual nature are disclosed differing materially from the conditions usually inherent in Work of the character shown and specified, ODR and A/E shall be notified in writing of such conditions before they are disturbed. Upon such notice, or upon its own observation of such conditions, A/E, with the approval of ODR, will promptly make such changes in the Drawings and Specifications as they deem necessary to conform to the different conditions, and any increase or decrease in the cost of the Work, or in the time within which the Work is to be completed, resulting from such changes will be adjusted by Change Order, subject to the prior approval of ODR.

11.6 Extension of Time. All changes to the Contract Time shall be made as a consequence of requests as required under Section 9.6, and as documented by Change Order as provided under Section 11.1.

11.7 Administration of Change Order Requests. All changes in the Contract shall be administered in accordance with procedures approved by Owner, and when required, make use of such electronic information management system(s) as Owner may employ.

11.7.1 Routine changes in the construction Contract shall be formally initiated by A/E by means of a PCO form detailing requirements of the proposed change for pricing by Contractor. This action may be preceded by communications between Contractor, A/E and ODR concerning the need and nature of the change, but such communications shall not constitute a basis for beginning the proposed Work by Contractor. Except for emergency conditions described below, approval of Contractor's cost proposal by A/E and ODR will be required for authorization to proceed with the Work being changed. Owner will not be responsible for the cost of Work changed without prior approval and Contractor may be required to remove Work so installed.

11.7.2 All proposed costs for change order Work must be supported by itemized accounting of material, equipment and associated itemized installation costs in sufficient detail, following the outline and organization of the established

Schedule of Values, to permit analysis by A/E and ODR using current estimating guides and/or practices. Photocopies of Subcontractor and vendor proposals shall be furnished unless specifically waived by ODR. Contractor shall provide written response to a change request within twenty-one (21) days of receipt.

11.7.3 Any unexpected circumstance which necessitates an immediate change in order to avoid a delay in progress of the Work may be expedited by verbal communication and authorization between Contractor and Owner, with written confirmation following within twenty-four (24) hours. A limited scope not-to-exceed estimate of cost and time will be requested prior to authorizing Work to proceed. Should the estimate be impractical for any reason, ODR may authorize the use of detailed cost records of such work to establish and confirm the actual costs and time for documentation in a formal Change Order.

11.7.4 Emergency changes to save life or property may be initiated by Contractor alone (see Section 7.3) with the claimed cost and/or time of such work to be fully documented as to necessity and detail of the reported costs and/or time.

11.7.5 The method of incorporating approved Change Orders into the parameters of the accepted Schedule of Values must be coordinated and administered in a manner acceptable to ODR.

11.8 Pricing Change Order Work. The amounts that Contractor and/or its Subcontractor adds to a Change Order for profit and overhead will also be considered by Owner before approval is given. The amounts established hereinafter are the maximums that are acceptable to Owner.

11.8.1 For Work performed by its forces, Contractor will be allowed their actual costs for materials, the total amount of wages paid for labor, plus the total cost of State and Federal payroll taxes and of worker's compensation and comprehensive general liability insurance, plus additional bond and builders risk insurance cost if the change results in an increase in the premium paid by Contractor. To the total of the above costs, Contractor will be allowed to add a percentage as noted below to cover overhead and profit combined.

Allowable percentages for overhead and profit on any specific change shall not exceed fifteen (15) percent for the first $10,000 of value for self- performed work or portion thereof, ten (10) percent for the second $10,000 of value for self-performed work or portion thereof and seven and a half (7.5) percent for any value of the self-performed work that exceeds $20,000.

11.8.2 For subcontracted Work each affected Subcontractor shall figure its costs, overhead and profit as described above for Contractor's Work, all Subcontractor costs shall be combined, and to that total Subcontractor cost

Contractor will be allowed to add a maximum mark-up of ten (10) percent for the first $10,000 of subcontracted Work value or portion thereof, seven and half (7.5) percent for the second $10,000 of subcontracted Work value or portion thereof, and five (5) percent for any value of the subcontracted Work exceeding $20,000.

11.8.3 On changes involving both additions and deletions, percentages for overhead and profit will be allowed only on the net addition. Owner does not accept and will not pay for additional Contract cost identified as indirect or consequential damages.

11.8.4 For Contracts based on a Guaranteed Maximum Price (GMP), the Construction Manager-at-Risk or Design Builder shall NOT be entitled to a percentage mark-up on any Change Order Work unless the Change Order increases the Guaranteed Maximum Price.

11.9 Unilateral Change Order (ULCO). Owner may issue a written ULCO directing a change in the Work prior to reaching agreement with Contractor on the adjustment, if any, in the Contract price and/or the Contract Time.

11.9.1 Owner and Contractor shall negotiate for appropriate adjustments, as applicable, to the Contract Sum or the Contract Time arising out of a ULCO. As the changed Work is performed, Contractor shall submit its costs for such Work with its Application for Payment beginning with the next Application for Payment within thirty (30) days of the issuance of the ULCO. The Parties reserve their rights as to the disputed amount, subject to Article 15.

11.10 Final Resolution of Changes. Upon execution of a Change Order and /or a ULCO by Owner, Contractor and A/E, all costs and time issues regarding that change are final and not subject to adjustment.

Article 12. Project Completion and Acceptance

12.1 Closing Inspections.

12.1.1 Substantial Completion Inspection. When Contractor considers the entire Work or part thereof Substantially Complete, it shall notify ODR in writing that the Work will be ready for Substantial Completion inspection on a specific date. Contractor shall include with this notice Contractor's Punchlist to indicate that it has previously inspected all the Work associated with the request for inspection, noting items it has corrected and included all remaining work items with date scheduled for completion or correction prior to final inspection. The failure to include any items on this list does not alter the responsibility of Contractor to complete all Work in accordance with the Contract Documents. If any of the items on this list prevents the Project from being used as intended, Contractor shall not request a Substantial Completion Inspection. Owner and its representatives will review the list of items and schedule the requested inspection, or inform Contractor in writing that such an inspection is premature because the Work is not sufficiently advanced or conditions are not as represented on Contractor's list.

12.1.1.1 Prior to the Substantial Completion inspection, Contractor shall furnish a copy of its marked-up Record Documents and a preliminary copy of each instructional manual, maintenance and operating manual, parts catalog, wiring diagrams, spare parts, specified written warranties, and like publications or parts for all installed equipment, systems, and like items as described in the Contract Documents. Delivery of these items is a prerequisite for requesting the Substantial Completion inspection.

12.1.1.2 On the date requested by Contractor, or as mutually agreed upon pending the status of the Open Items List, A/E, ODR, Contractor, and other Owner representatives as determined by Owner will jointly attend the Substantial Completion inspection, which shall be conducted by ODR or their delegate. If ODR determines that the Work is Substantially Complete, ODR will issue a Certificate of Substantial Completion to be signed by A/E, Owner, and Contractor establishing the date of Substantial Completion and identifying responsibilities for security and maintenance. A/E will provide with this certificate a list of Punchlist items (the pre-final Punchlist) for completion prior to final inspection. This list may include items in addition to those on Contractor's Punchlist, which the inspection team deems necessary to correct or complete prior to final inspection. If Owner occupies the Project upon determination of Substantial Completion, Contractor shall complete all corrective Work at the convenience of Owner, without disruption to Owner's use of the Project for its intended purposes.

12.1.2 Final Inspection. Contractor shall complete the list of items identified on the pre-final Punchlist prior to requesting a final inspection. Unless otherwise specified, or otherwise agreed in writing by the parties as documented on the Certificate of Substantial Completion, Contractor shall complete and/or correct all Work within thirty (30) days of the Substantial Completion date. Upon completion of the pre-final Punchlist work, Contractor shall give written notice to ODR and A/E that the Work will be ready for final inspection on a specific date. Contractor shall accompany this notice with a copy of the updated pre-final Punchlist indicating resolution of all items. On the date specified or as soon thereafter as is practicable, ODR, A/E and Contractor will inspect the Work. A/E will submit to Contractor a final Punchlist of open items that the inspection team requires corrected or completed before final acceptance of the Work.

12.1.2.1 Correct or complete all items on the final Punchlist before requesting Final Payment. Unless otherwise agreed to in writing by the parties, complete this work within seven (7) days of receiving the final Punchlist. Upon completion of the final Punchlist, notify A/E and ODR in writing stating the disposition of each final Punchlist item. A/E, Owner, and Contractor shall promptly inspect the completed items. When the final Punchlist is complete, and the Contract is fully satisfied according to the Contract Documents ODR will issue a certificate establishing the date of Final Completion. Completion of all Work is a condition precedent to Contractor's right to receive Final Payment.

12.1.3 Annotation. Any Certificate issued under this Article may be annotated to indicate that it is not applicable to specified portions of the Work, or that it is subject to any limitation as determined by Owner.

12.1.4 Purpose of Inspection. Inspection is for determining the completion of the Work, and does not relieve Contractor of its overall responsibility for completing the Work in a good and competent fashion, in compliance with the Contract. Work accepted with incomplete Punchlist items or failure of Owner or other parties to identify Work that does not comply with the Contract Documents or is defective in operation or workmanship does not constitute a waiver of Owner's rights under the Contract or relieve Contractor of its responsibility for performance or warranties.

12.1.5 Additional Inspections.

12.1.5.1 If Owner's inspection team determines that the Work is not substantially complete at the Substantial Completion inspection, ODR or A/E will give Contractor written notice listing cause(s) of the rejection. Contractor will set a time for completion of

incomplete or defective work acceptable to ODR. Contractor shall complete or correct all work so designated prior to requesting a second Substantial Completion inspection.

12.1.5.2 If Owner's inspection team determines that the Work is not complete at the final inspection, ODR or A/E will give Contractor written notice listing the cause(s) of the rejection. Contractor will set a time for completion of incomplete or defective work acceptable to ODR. Contractor shall complete or correct all Work so designated prior to again requesting a final inspection.

12.1.5.3 The Contract contemplates three (3) comprehensive inspections: the Substantial Completion inspection, the Final Completion inspection, and the inspection of completed final Punchlist items. The cost to Owner of additional inspections resulting from the Work not being ready for one or more of these inspections is the responsibility of Contractor. Owner may issue a ULCO deducting these costs from Final Payment. Upon Contractor's written request, Owner will furnish documentation of any costs so deducted. Work added to the Contract by Change Order after Substantial Completion inspection is not corrective Work for purposes of determining timely completion, or assessing the cost of additional inspections.

12.1.6 Phased Completion. The Contract may provide, or Project conditions may warrant, as determined by ODR, that designated elements or parts of the Work be completed in phases. Where phased completion is required or specifically agreed to by the parties, the provisions of the Contract related to closing inspections, occupancy, and acceptance apply independently to each designated element or part of the Work. For all other purposes, unless otherwise agreed by the parties in writing, Substantial Completion of the Work as a whole is the date on which the last element or part of the Work completed receives a Substantial Completion certificate. Final Completion of the Work as a whole is the date on which the last element or part of the Work completed receives a Final Completion certificate.

12.2 Owner's Right of Occupancy. Owner may occupy or use all or any portion of the Work following Substantial Completion, or at any earlier stage of completion. Should Owner wish to use or occupy the Work, or part thereof, prior to Substantial Completion, ODR will notify Contractor in writing and identify responsibilities for security and maintenance Work performed on the premises by third parties on Owner's behalf does not constitute occupation or use of the Work by Owner for purposes of this Article. All Work performed by Contractor after occupancy, whether in part or in whole, shall be at the convenience of Owner so as to not disrupt Owner's use of, or access to occupied areas of the Project.

12.3 Acceptance and Payment

1231 Request for Final Payment. Following the certified completion of all work, including all final Punchlist items, cleanup, and the delivery of record documents, Contractor shall submit a certified Application for Final Payment and include all sums held as retainage and forward to A/E and ODR for review and approval.

1232 Final Payment Documentation. Contractor shall submit, prior to or with the Application for Final Payment, final copies of all close out documents, maintenance and operating instructions, guarantees and warranties, certificates, Record Documents and all other items required by the Contract. Contractor shall submit evidence of return of access keys and cards, evidence of delivery to Owner of attic stock, spare parts, and other specified materials. Contractor shall submit consent of surety to Final Payment form and an affidavit that all payrolls, bills for materials and equipment, subcontracted work and other indebtedness connected with the Work, except as specifically noted, are paid, will be paid, after payment from Owner or otherwise satisfied within the period of time required by Tex. Gov't Code, Chapter 2251. Contractor shall furnish documentation establishing payment or satisfaction of all such obligations, such as receipts, releases and waivers of claims and liens arising out of the Contract. Contractor may not subsequently submit a claim on behalf of Subcontractor or vendor unless Contractor's affidavit notes that claim as an exception.

1233 Architect/Engineer Approval. A/E will review a submitted Application for Final Payment promptly but in no event later than ten (10) days after its receipt. Prior to the expiration of this deadline, A/E will either: 1) return the Application for Final Payment to Contractor with corrections for action and resubmission; or 2) accept it, note their approval, and send to Owner.

1234 Offsets and Deductions. Owner may deduct from the Final Payment all sums due from Contractor. If the Certificate of Final Completion notes any Work remaining, incomplete, or defects not remedied, Owner may deduct the cost of remedying such deficiencies from the Final Payment. On such deductions, Owner will identify each deduction, the amount, and the explanation of the deduction on or by the twenty-first (21st) day after Owner's receipt of an approved Application for Final Payment. Such offsets and deductions shall be incorporated via a final Change Order, including a ULCO as may be applicable.

1235 Final Payment Due. Final Payment is due and payable by Owner, subject to all allowable offsets and deductions, on the thirtieth (30th) day following Owner's approval of the Application for Payment. If Contractor disputes any amount deducted by Owner, Contractor shall give notice of the dispute on or before the thirtieth (30th) day following receipt of Final Payment. Failure to do so will bar any subsequent claim for payment of amounts deducted.

12.3.6 Effect of Final Payment. Final Payment constitutes a waiver of all claims by Owner, relating to the condition of the Work except those arising from:

12.3.6.1 Faulty or defective Work appearing after Substantial Completion (latent defects);

12.3.6.2 Failure of the Work to comply with the requirements of the Contract Documents;

12.3.6.3 Terms of any warranties required by the Contract, or implied by law; or

12.3.6.4 Claims arising from personal injury or property damage to third parties.

12.3.7 Waiver of Claims. Final payment constitutes a waiver of all claims and liens by Contractor except those specifically identified in writing and submitted to ODR prior to the application for Final Payment.

12.3.8 Effect on Warranty. Regardless of approval and issuance of Final Payment, the Contract is not deemed fully performed by Contractor and closed until the expiration of all warranty periods.

Article 13. Warranty and Guarantee

13.1 Contractor's General Warranty and Guarantee. Contractor warrants to Owner that all Work is executed in accordance with the Contract, complete in all parts and in accordance with approved practices and customs, and of the required finish and workmanship. Contractor further warrants that unless otherwise specified, all materials and equipment incorporated in the Work under the Contract are new. Owner may, at its option, agree in writing to waive any failure of the Work to conform to the Contract, and to accept a reduction in the Contract price for the cost of repair or diminution in value of the Work by reason of such defect. Absent such a written agreement, Contractor's obligation to perform and complete the Work in accordance with the Contract Documents is absolute and is not waived by any inspection or observation by Owner, A/E or others, by making any progress payment or final payment, by the use or occupancy of the Work or any portion thereof by Owner, at any time, or by any repair or correction of such defect made by Owner.

13.2 Warranty Period. Except as may be otherwise specified or agreed, Contractor shall repair all defects in materials, equipment, or workmanship appearing within two years from the date of Substantial Completion of the Work. If Substantial Completion occurs by phase, then the warranty period for that particular Work begins on the date of such occurrence, or as otherwise stipulated on the Certificate of Substantial Completion for the particular Work.

13.3 Limits on Warranty. Contractor's warranty and guarantee hereunder excludes defects or damage caused by:

13.3.1 Modification or improper maintenance or operation by persons other than Contractor, Subcontractors, or any other individual or entity for whom Contractor is not responsible, unless Owner is compelled to undertake maintenance or operation due to the neglect of Contractor.

13.3.2 Normal wear and tear under normal usage after acceptance of the Work by Owner.

13.4 Events Not Affecting Warranty. Contractor's obligation to perform and complete the Work in a good and workmanlike manner in accordance with the Contract Documents is absolute. None of the following will constitute an acceptance of defective Work that is not in accordance with the Contract Documents or a release of Contractor's obligation to perform the Work in accordance with the Contract Documents:

13.4.1 Observations by Owner and/or A/E;

13.4.2 Recommendation to pay any progress or final payment by A/E;

13.4.3 The issuance of a certificate of Substantial Completion or any payment by Owner to Contractor under the Contract Documents;

13.4.4 Use or occupancy of the Work or any part thereof by Owner;

13.4.5 Any acceptance by Owner or any failure to do so;

13.4.6 Any review of a Shop Drawing or sample submittal; or

13.4.7 Any inspection, test or approval by others.

13.5 Separate Warranties. If a particular piece of equipment or component of the Work for which the Contract requires a separate warranty is placed in continuous service before Substantial Completion, the warranty period for that equipment or component will not begin until Substantial Completion, regardless of any warranty agreements in place between suppliers and/or Subcontractors and Contractor. ODR will certify the date of service commencement in the Substantial Completion certificate.

13.5.1 In addition to Contractor's warranty and duty to repair, Contractor expressly assumes all warranty obligations required under the Contract for specific building components, systems and equipment.

13.5.2 Contractor may satisfy any such obligation by obtaining and assigning to Owner a complying warranty from a manufacturer, supplier, or Subcontractor. Where an assigned warranty is tendered and accepted by Owner which does not fully comply with the requirements of the Contract, Contractor remains liable to Owner on all elements of the required warranty not provided by the assigned warranty.

13.6 Correction of Defects. Upon receipt of written notice from Owner, or any agent of Owner designated as responsible for management of the warranty period, of the discovery of a defect, Contractor shall promptly remedy the defect(s), and provide written notice to Owner and designated agent indicating action taken. In case of emergency where delay would cause serious risk of loss or damage to Owner, or if Contractor fails to remedy within thirty (30) days, or within another period agreed to in writing, Owner may correct the defect and be reimbursed the cost of remedying the defect from Contractor or its surety.

13.7 Certification of No Asbestos Containing Materials or Work. Contractor shall ensure compliance with the Asbestos Hazard Emergency Response Act (AHERA– 40 C.F.R § 763-99(7)) from all Subcontractors and materials suppliers, and shall provide a notarized certification to Owner that all equipment and materials used in fulfillment of their Contract responsibilities are non-Asbestos Containing Building Materials (ACBM). This certification must be provided no later than Contractor's application for Final Payment.

Article 14. Suspension and Termination

14.1 Suspension of Work for Cause. Owner may, at any time without prior notice, suspend all or any part of the Work, if after reasonable observation and/or investigation, Owner determines it is necessary to do so to prevent or correct any condition of the Work, which constitutes an immediate safety hazard, or which may reasonably be expected to impair the integrity, usefulness or longevity of the Work when completed.

14.1.1 Owner will give Contractor a written notice of suspension for cause, setting forth the reason for the suspension and identifying the Work suspended. Upon receipt of such notice, Contractor shall immediately stop the Work so identified. As soon as practicable following the issuance of such a notice, Owner will initiate and complete a further investigation of the circumstances giving rise to the suspension, and issue a written determination of the findings.

14.1.2 If it is confirmed that the cause was within the control of Contractor, Contractor will not be entitled to an extension of time or any compensation for delay resulting from the suspension. If the cause is determined not to have been within the control of Contractor, and the suspension has prevented Contractor from completing the Work within the Contract Time, the suspension is an excusable delay and a time extension will be granted through a Change Order.

14.1.3 Suspension of Work under this provision will be no longer than is reasonably necessary to remedy the conditions giving rise to the suspension.

14.2 Suspension of Work for Owner's Convenience. Upon seven (7) days written notice to Contractor, Owner may at any time without breach of the Contract suspend all or any portion of the Work for a period of up to thirty (30) days for its own convenience. Owner will give Contractor a written notice of suspension for convenience, which sets forth the number of suspension days for which the Work, or any portion of it, and the date on which the suspension of Work will cease. When such a suspension prevents Contractor from completing the Work within the Contract Time, it is an excusable delay. A notice of suspension for convenience may be modified by Owner at any time on seven (7) days written notice to Contractor. If Owner suspends the Work for its convenience for more than sixty (60) consecutive days, Contractor may elect to terminate the Contract pursuant to the provisions of the Contract.

14.3 Termination by Owner for Cause.

14.3.1 Upon written notice to Contractor and its surety, Owner may, without prejudice to any right or remedy, terminate the Contract and take possession of the Site and of all materials, equipment, tools, construction equipment, and machinery thereon owned by Contractor under any of the following circumstances:

14.3.1.1 Persistent or repeated failure or refusal, except during complete or partial suspensions of work authorized under the Contract, to supply enough properly skilled workmen or proper materials;

14.3.1.2 Persistent disregard of laws, ordinances, rules, regulations or orders of any public authority having jurisdiction, including ODR;

14.3.1.3 Persistent failure to prosecute the Work in accordance with the Contract, and to ensure its completion within the time, or any approved extension thereof, specified in the Contract;

14.3.1.4 Failure to remedy defective work condemned by ODR;

14.3.1.5 Failure to pay Subcontractors, laborers, and material suppliers pursuant to Tex. Gov't Code, Chapter 2251;

14.3.1.6 Persistent endangerment to the safety of labor or of the Work;

14.3.1.7 Failure to supply or maintain statutory bonds or to maintain required insurance, pursuant to the Contract;

14.3.1.8 Any material breach of the Contract; or

14.3.1.9 Contractor's insolvency, bankruptcy, or demonstrated financial inability to perform the Work.

14.3.2 Failure by Owner to exercise the right to terminate in any instance is not a waiver of the right to do so in any other instance.

14.3.3 Should Owner decide to terminate the Contract under the provisions of Section 14.3, it will provide to Contractor and its surety thirty (30) days prior written notice.

14.3.4 Should Contractor or its surety, after having received notice of termination, demonstrate to the satisfaction of Owner that Contractor or its surety are proceeding to correct such default with diligence and promptness, upon which the notice of termination was based, the notice of termination may be rescinded in writing by Owner. If so rescinded, the Work may continue without an extension of time.

14.3.5 If Contractor or its surety fails, after written notice from Owner to commence and continue correction of such default with diligence and promptness to the satisfaction of Owner within thirty (30) days following receipt of notice, Owner may arrange for completion of the Work and deduct the cost of completion from the unpaid Contract Sum.

14.3.5.1 This amount includes the cost of additional Owner costs such as A/E services, other consultants, and contract administration.

14.3.5.2 Owner will make no further payment to Contractor or its surety unless the costs to complete the Work are less than the Contract balance, then the difference shall be paid to Contractor or its surety. If such costs exceed the unpaid balance, Contractor or its surety will pay the difference to Owner.

14.3.5.3 This obligation for payment survives the termination of the Contract.

14.3.5.4 Owner reserves the right in termination for cause to take assignment of all the Contracts between Contractor and its Subcontractors, vendors, and suppliers. ODR will promptly notify Contractor of the contracts Owner elects to assume. Upon receipt of such notice, Contractor shall promptly take all steps necessary to effect such assignment.

14.4 Conversion to Termination for Convenience. In the event that any termination of Contractor for cause under Section 14.3 is later determined to have been improper, the termination shall automatically convert to a termination for convenience under Section 14.5 and Contractor's recovery for termination shall be strictly limited to the payments allowable under Section 14.5.

14.5 Termination for Convenience of Owner. Owner reserves the right, without breach, to terminate the Contract prior to, or during the performance of the Work, for any reason. Upon such an occurrence, the following shall apply:

14.5.1 Owner will immediately notify Contractor and A/E in writing, specifying the reason for and the effective date of the Contract termination. Such notice may also contain instructions necessary for the protection, storage or decommissioning of incomplete work or systems, and for safety.

14.5.2 Upon receipt of the notice of termination, Contractor shall immediately proceed with the following obligations, regardless of any delay in determining or adjusting any amounts due at that point in the Contract:

14.5.2.1 Stop all work.

14.5.2.2 Place no further subcontracts or orders for materials or services.

14.5.2.3 Terminate all subcontracts for convenience.

14.5.2.4 Cancel all materials and equipment orders as applicable.

14.5.2.5 Take action that is necessary to protect and preserve all property related to the Contract which is in the possession of Contractor.

14.5.3 When the Contract is terminated for Owner's convenience, Contractor may recover from Owner payment for all Work executed. Contractor may not claim lost profits on other work or lost business opportunities.

14.6 Termination By Contractor. If the Work is stopped for a period of ninety (90) days under an order of any court or other public authority having jurisdiction, or as a result of an act of government, such as a declaration of a national emergency making materials unavailable, through no act or fault of Contractor or Subcontractor or their agents or employees or any other persons performing any of the Work under a contract with Contractor, then Contractor may, upon thirty (30) additional days written notice to ODR, terminate the Contract and recover from Owner payment for all Work executed, but not lost profits on other work or lost business opportunities. If the cause of the Work stoppage is removed prior to the end of the thirty (30) day notice period, Contractor may not terminate the Contract.

14.7 Settlement on Termination. When the Contract is terminated for any reason, at any time prior to one hundred eighty (180) days after the effective date of termination, Contractor shall submit a final termination settlement proposal to Owner based upon recoverable costs as provided under the Contract. If Contractor fails to submit the proposal within the time allowed, Owner may determine the amount due to Contractor because of the termination and pay the determined amount to Contractor.

Article 15. Dispute Resolution

15.1 Unresolved Contractor Disputes. The dispute resolution process provided for in Tex. Gov't Code, Chapter 2260, shall be used by Contractor to attempt to resolve any claim for breach of Contract made by Contractor that is not resolved under procedures described throughout the Uniform General Conditions, Supplementary Conditions, or Special Conditions of the Contract.

15.2 Alternative Dispute Resolution Process. Owner may establish a dispute resolution process to be utilized in advance of that outlined in Tex. Gov't Code, Chapter 2260.

15.3 Nothing herein shall hinder, prevent, or be construed as a waiver of Owner's right to seek redress on any disputed matter in a court of competent jurisdiction.

15.4 Nothing herein shall waive or be construed as a waiver of the State's sovereign immunity.

Article 16. Miscellaneous

16.1 Supplementary General and Special Conditions. When the Work contemplated by Owner is of such a character that the foregoing Uniform General Conditions of the Contract cannot adequately cover necessary and additional contractual relationships, the Contract may include Supplementary General and Special Conditions as described below:

16.1.1 Supplementary General Conditions may describe the standard procedures and requirements of contract administration followed by a contracting agency of the State. Supplementary General Conditions may expand upon matters covered by the Uniform General Conditions, where necessary, provided the expansion does not weaken the character or intent of the Uniform General Conditions. Supplementary General Conditions are of such a character that it is to be anticipated that a contracting agency of the State will normally use the same, or similar, conditions to supplement each of its several projects.

16.1.2 Special Conditions shall relate to a particular Project and be unique to that Project but shall not weaken the character or intent of the Uniform General Conditions.

16.2 Federally Funded Projects. On Federally funded projects, Owner may waive, suspend or modify any Article in these Uniform General Conditions which conflicts with any Federal statue, rule, regulation or procedure, where such waiver, suspension or modification is essential to receipt by Owner of such Federal funds for the Project. In the case of any Project wholly financed by Federal funds, any standards required by the enabling Federal statute, or any Federal rules, regulations or procedures adopted pursuant thereto, shall be controlling.

16.3 Internet-based Project Management Systems. At its option, Owner may administer its design and construction management through an Internet-based management system. In such cases, Contractor shall conduct communication through this media and perform all Project related functions utilizing this database system. This includes correspondence, submittals, Requests for Information, vouchers or payment requests and processing, amendment, Change Orders and other administrative activities.

16.3.1 Accessibility and Administration.

16.3.1.1 When used, Owner will make the software accessible via the Internet to all Project team members.

16.3.1.2 Owner shall administer the software.

16.3.2 Training. When used, Owner shall provide training to the Project team members.

End of General Conditions

CERTIFICATE OF INTERESTED PARTIES

FORM 1295

Complete Nos. 1 - 4 and 6 if there are interested parties.
Complete Nos. 1, 2, 3, 5, and 6 if there are no interested parties.

OFFICE USE ONLY
CERTIFICATION OF FILING

Certificate Number:
2026-1500263

Date Filed:
08/10/2026

Date Acknowledged:

1 Name of business entity filing form, and the city, state and country of the business entity's place of business.
WSB LLC
Austin, TX United States

2 Name of governmental entity or state agency that is a party to the contract for which the form is being filed.
City of Hutto, Texas

3 Provide the identification number used by the governmental entity or state agency to track or identify the contract, and provide a description of the services, goods, or other property to be provided under the contract.
Owner's Rep. MSA R-2024-240
Owner's Representative Master Services Agreement FY 25/26 - IPO #2

4 Name of Interested Party	City, State, Country (place of business)	Nature of interest (check applicable)	
		Controlling	Intermediary
Weiss, Bret	Minneapolis, MN United States	X	

5 Check only if there is NO Interested Party. ☐

6 UNSWORN DECLARATION

My name is JAMES KENNEDY, and my date of birth is [redacted].

My address is 1221 S. MoPac Expy #355, Austin (city), TX (state), 78746 (zip code), USA (country).

I declare under penalty of perjury that the foregoing is true and correct.

Executed in TRAVIS County, State of TEXAS, on the 10 day of Aug (month), 20 26 (year).

Signature of authorized agent of contracting business entity
(Declarant)

AGENDA ITEM REPORT
10.3.

To:	City Council
Subject:	Consideration and possible action on Resolution No. R-2026-176 accepting the infrastructure improvements for private development known as Lidell Walker Phase 2B, Plat name: Prairie Winds. (Kate Moriarty)
Meeting:	Thursday, September 3, 2026
Department:	Engineering /
Staff Contact:	Kate Moriarty

ITEM SUMMARY:

This project is located in the Northeast section of Hutto and consists of infrastructure acceptance of **wastewater, sidewalk, drainage and streets** construction with the Lidell Walker Phase 2B. The final inspection by staff accepts this infrastructure, including supporting documentation. Infrastructure documents include maintenance bonds, cost summary, areas approved and itemized infrastructure.

STAFF RECOMMENDATION:

Staff Recommends Approval

FISCAL NOTES:

No financial impact from acceptance of infrastructure improvements. Engineering has confirmed that maintenance bonds have been received and provided to City Secretary for recordkeeping.

ATTACHMENTS:

1. Lidell_Walker_Phase_2B Map
2. 03_31_~1
3. 03_31_~2
4. 03_31_~3
5. 20260805 Hutto RES Lidell Walker Phase 2B
6. 24048 COH Maintenance Bond REV
7. 25055 COH Maintenance Bond
8. Dry Utility Plan
9. Final Subdivision Checklist
10. Lidell Walker Ph. 2B (Record Drawings)
11. Lidell Walker Phase 2B Construction Summary
12. Lidell Walker Phase 2B ECL signed
13. Lidell Walker Phase 2B FCQ's (COH)
14. Lidell-WalkerPh2BFP(Recorded)
15. Survey-Control-Point-Description_20260629

AGENDA ITEM REPORT
10.3.

Lidell Walker Phase 2B

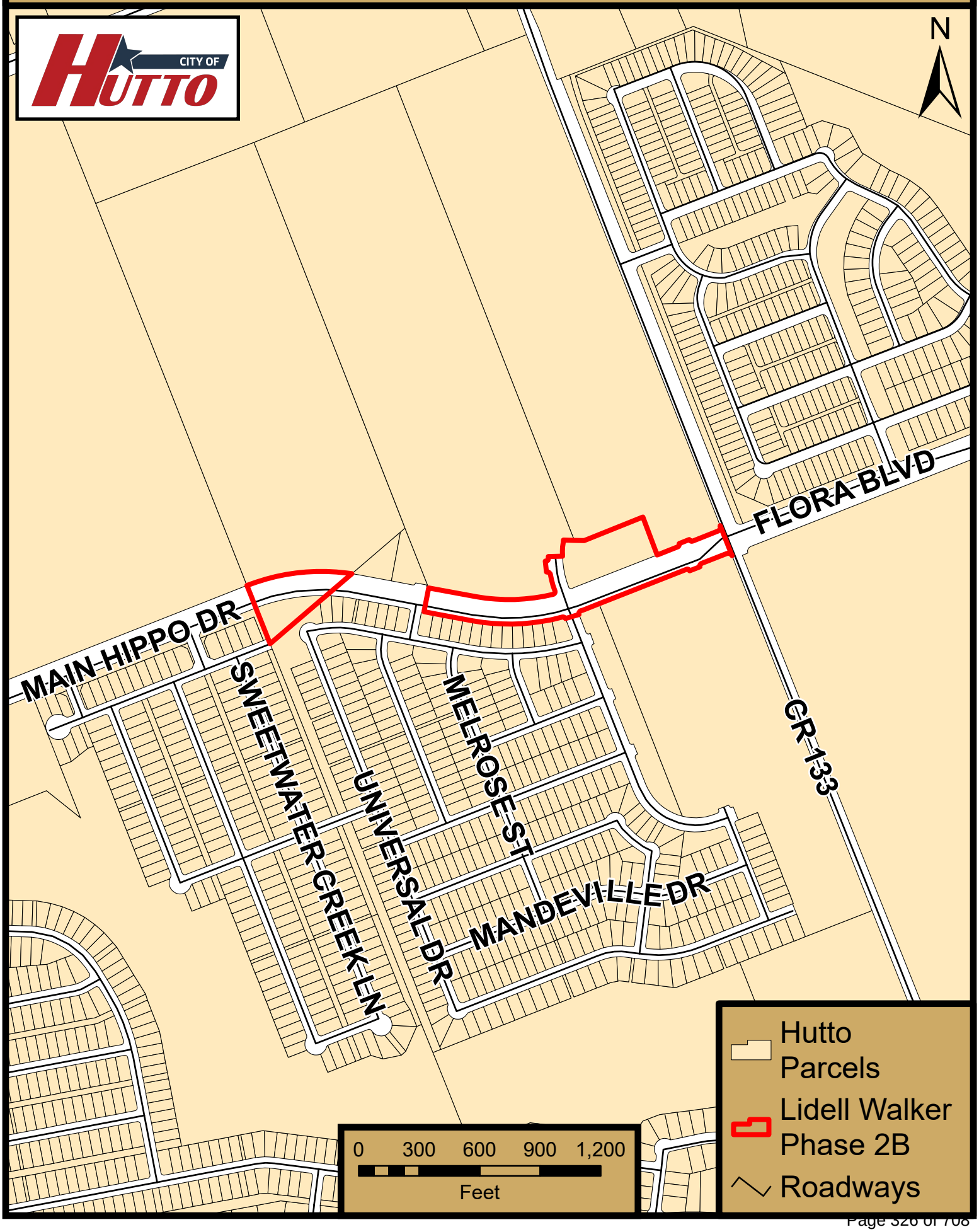


ONLY





RESOLUTION NO. R-2026-XXX

A RESOLUTION OF THE CITY OF HUTTO, TEXAS, APPROVING INFRASTRUCTURE IMPROVEMENTS FOR THE PROJECT KNOWN AS LIDELL WALKER PHASE 2B IN THE CITY OF HUTTO, WILLIAMSON COUNTY; PROVIDING PROPER NOTICE AND MEETING, AND PROVIDING AN EFFECTIVE DATE.

WHEREAS, the public infrastructure improvements for Lidell Walker Phase 2B project have been constructed and are ready for acceptance; and

WHEREAS, a final inspection was conducted by the City Construction Inspection and Public Works staff on all streets, sidewalks, ramps, drainage, water, and wastewater improvements; and

WHEREAS, Swiss Re Corporate Solutions America Insurance Corporation submitted warranty bonds to cover the material and workmanship for two years.

NOW, THEREFORE, BE IT RESOLVED BY THE CITY COUNCIL OF THE CITY OF HUTTO, TEXAS, THAT:

SECTION 1: The findings set forth in the recitals of this Resolution are hereby found to be true and correct and are hereby adopted as findings of the City Council and are incorporated into the body of this Resolution as if fully set forth herein.

SECTION 2: That the Hutto City Council hereby approves and authorizes the City Manager to accept the infrastructure and enter into a two-year maintenance period.

SECTION 3: The City Council hereby finds and declares that written notice of the date, hour, place and subject of the meeting at which this Resolution was adopted was posted and that such meeting was open to the public as required by law at all times during which this Resolution and the subject matter hereof were discussed, considered and formally acted upon, all as required by the Open Meetings Act, Chapter 551, Texas Government Code, as amended.

SECTION 4: This Resolution shall take effect immediately upon its passage.

PASSED & APPROVED by the CITY COUNCIL of the CITY OF HUTTO, on the 3rd day of September 2026 on vote of __AYES; ___NAYS; __ABSTENTIONS

CITY OF HUTTO, TEXAS

_____
Mike Snyder, Mayor

ATTEST:

_____
Laura Hallmark, City Secretary

CITY OF HUTTO
MAINTENANCE BOND
BOND No. 2377875

THE STATE OF TEXAS §
§
COUNTY OF WILLIAMSON §

KNOW ALL MEN BY THESE PRESENTS,

That, Liberty Civil Construction, LLC, a [corporation, limited partnership, etc.] having a principal place of business at 2937 Hero Way, Leander, TX 78641, as Principal and Swiss Re Corporate Solutions America Insurance Corporation, a corporation authorized to issue surety bonds in the State of Texas, and having an office and place of business in Texas at 1200 Main St., Suite 800, Kansas City, MO 64105, as Surety, are held and firmly bound unto the CITY OF HUTTO, TEXAS, a home-rule municipal corporation organized under the laws of the State of Texas with principal administrative offices at Hutto City Hall, 500 West Live Oak Street, Hutto, Texas 78634 in Williamson County, Texas, as Obligee, in the sum of Two Million Four Hundred Seventy-seven Thousand Seven Hundred & 38/100 DOLLARS ($ 2,477,700.38) lawful money of the United States, for the payment whereof to the Obligee, the Principal and the Surety bind themselves, their heirs, executors, administrators, successors, and assigns, jointly and severally, firmly to these presents:

WHEREAS, Principal is responsible for the completion of Lidell Walker Phase 2B located at Hutto, Texas in Williamson County, Texas (the "Work"), [as per the map or plat thereof recorded in 2025006497 of the Deed Records of Williamson County, Texas under Williamson County Clerk File Number and ;][under a certain contract between Principal and Obligee for said Work approved by the Hutto City Council by the attached Resolution;

WHEREAS, Principal has certified in writing to Obligee that all required Work has been completed in accordance with the approved construction plans and Obligee's applicable standards and specifications;

WHEREAS, Principal has requested that the City of Hutto, Texas acknowledge completion and acceptance of the Work as provided by the Code of Ordinances of the City of Hutto, Texas, the issuance of such certificate being subject to the requirement that Principal shall correct all defects within publicly dedicated improvements and Work done for the benefit of Obligee that occur within two (2) years of the date of the acceptance of the Work;

WHEREAS, under the terms of the specifications for the Work, Principal is required to give a bond equal to 100% of the amount of the contract to protect the Obligee against the result of faulty materials or workmanship for a period of 24 months after acceptance of the Work; and

WHEREAS, this Bond is intended as satisfying that bonding obligation of Principal to Obligee.

NOW, THEREFORE, THE CONDITION OF THIS OBLIGATION is such that if the above-

named Principal shall correct any defects to the Work within 24 months from the date of the issuance of the above-described certificate of completion, then this obligation is to be void; otherwise, to remain in full force and effect.

It is hereby understood and agreed that if Principal shall fail to correct any defects in the required improvements as required by such ordinances and regulations, then the [Planning Commission of the City of Hutto, Texas][the Obligee] may thereupon declare this bond to be in default and collect the sum remaining payable thereunder and upon receipt of the proceeds thereof, the Obligee may install or repair such improvements as are covered by this bond.

IN WITNESS WHEREOF, the said Principal and Surety have signed and sealed this instrument this 22nd **day of** April **20**26**.**

Liberty Civil Construction, LLC
Principal

By:
Title: Michael Ehrhardt, President
Address: 2937 Hero Way
Leander, TX 78641

Swiss Re Corporate Solutions America Insurance Corporation
Surety

By:
Title: Elizabeth Ortiz, Attorney-in-Fact
Address: 1200 Main St., Suite 800
Kansas City, MO 64105

The name and address of the Resident Agent of Surety in Williamson County, Texas, is:
Acrisure, LLC - Bryan K. Moore
32335 US-Highway 281 N., Ste. 1101, Bulverde, TX 78163

SWISS RE CORPORATE SOLUTIONS

SWISS RE CORPORATE SOLUTIONS AMERICA INSURANCE CORPORATION ("SRCSAIC")
SWISS RE CORPORATE SOLUTIONS PREMIER INSURANCE CORPORATION ("SRCSPIC")
SWISS REINSURANCE AMERICA CORPORATION ("SRAC")

GENERAL POWER OF ATTORNEY

KNOW ALL MEN BY THESE PRESENTS, THAT SRCSAIC, a corporation duly organized and existing under laws of the State of Missouri, and having its principal office in the City of Kansas City, Missouri, and SRCSPIC, a corporation organized and existing under the laws of the State of Missouri and having its principal office in the City of Kansas City, Missouri, and SRAC, a corporation organized and existing under the laws of the State of New York and having its principal office in the City of Armonk, New York, each does hereby make, constitute, and appoint:

JOHN R. WARD, THOMAS DOUGLAS MOORE, EMILY ALLISON MIKESKA, ALLYSON W. DEAN, TROY RUSSELL KEY, DEBRA LEE MOON, ANDREA ROSE CRAWFORD, SANDRA LEE RONEY,

FAITH ANN HILTY, ANDREW GARETH ADDISON, ELIZABETH ORTIZ, ANA OWENS, ANDREW PATRICK CLARK, KIMBERLY ROCHELLE GONZALEZ, CRYSTAL GAIL LANGHORN,

STEVEN WAYNE LEWIS, SHERI RENEE ALLEN, PEGGY GRADEL HOGAN, TERESA AYALA, KELLI A GORHAM, MARK ROBERT ADAMS, CORY KIPER, ROSS RUDOLPH LARIS AND BAILEE MARIE ISLAS JOINTLY OR SEVERALLY

Its true and lawful Attorney(s)-in-Fact, to make, execute, seal and deliver, for and on its behalf and as its act and deed, bonds, consents of surety, or other writings obligatory in the nature of a bond on behalf of each of said Companies, as surety, on contracts of suretyship as are or may be required or permitted by law, regulation, contract or otherwise, provided that no bond or undertaking or contract or suretyship executed under this authority shall exceed the amount of:

TWO HUNDRED FIFTY MILLION (250,000,000.00) DOLLARS

This Power of Attorney is granted and is signed by facsimile under and by the authority of the following Resolutions adopted by the Boards of Directors of both SRCSAIC and SRCSPIC at meetings duly called and held on the 18th of November 2021 and SRAC at a meeting duly called and held on the 7th of November 2025:

"RESOLVED, that any two of the President, any Managing Director, any Senior Vice President, any Vice President, the Secretary or any Assistant Secretary be, and each or any of them hereby is, authorized to execute a Power of Attorney qualifying the attorney named in the given Power of Attorney to execute on behalf of the Corporation bonds, undertakings and all contracts of surety, and that each or any of them hereby is authorized to attest to the execution of any such Power of Attorney and to attach therein the seal of the Corporation; and it is

FURTHER RESOLVED, that the signature of such officers and the seal of the Corporation may be affixed to any such Power of Attorney or to any certificate relating thereto by facsimile, and any such Power of Attorney or certificate bearing such facsimile signatures or facsimile seal shall be binding upon the Corporation when so affixed and in the future with regard to any bond, undertaking or contract of surety to which it is attached."

SWISS RE CORPORATE SOLUTIONS AMERICA INSURANCE CORPORATION CORPORATE SEAL 1973 MISSOURI

SWISS RE CORPORATE SOLUTIONS PREMIER INSURANCE CORPORATION CORPORATE SEAL MISSOURI

By _____
David Satory, Senior Vice President of SRCSAIC & Senior Vice President of SRCSPIC & Senior Vice President of SRAC

By _____
Gabriel Jacquez, Senior Vice President of SRCSAIC & Senior Vice President of SRCSPIC & Senior Vice President of SRAC

SWISS REINSURANCE AMERICA CORPORATION CORPORATE SEAL 1940 NEW YORK

IN WITNESS WHEREOF, SRCSAIC, SRCSPIC, and SRAC have caused their official seals to be hereunto affixed, and these presents to be signed by their authorized officers this 26th day of January, 20 26.

Swiss Re Corporate Solutions America Insurance Corporation
Swiss Re Corporate Solutions Premier Insurance Corporation
Swiss Reinsurance America Corporation

State of Illinois
County of Cook ss

On this 26th day of January, 20 26, before me, a Notary Public personally appeared David Satory, Senior Vice President of SRCSAIC and Senior Vice President of SRCSPIC and Senior Vice President of SRAC, and Gabriel Jacquez, Senior Vice President of SRCSAIC and Senior Vice President of SRCSPIC and Senior Vice President of SRAC, personally known to me, who being by me duly sworn, acknowledged that they signed the above Power of Attorney as officers of and acknowledged said instrument to be the voluntary act and deed of their respective companies.

OFFICIAL SEAL
KAREN M SZWEDA
Notary Public, State of Illinois
Commission No. 978628
My Commission Expires September 26, 2027

Karen M. Szweda, Notary

I, Jeffrey Goldberg, the duly elected Senior Vice President and Assistant Secretary of SRCSAIC and SRCSPIC and SRAC, do hereby certify that the above and foregoing is a true and correct copy of a Power of Attorney given by said SRCSAIC and SRCSPIC and SRAC, which is still in full force and effect.

IN WITNESS WHEREOF, I have set my hand and affixed the seals of the Companies this 22nd day of April, 20 26.

Jeffrey Goldberg, Senior Vice President & Assistant Secretary of SRCSAIC and SRCSPIC and SRAC

IMPORTANT NOTICE

In order to obtain information or make a complaint:

You may contact **Jeffrey Goldberg, Vice President - Claims,** at **1-800-338-0753.**

You may call **Swiss Re Corporate Solutions America Insurance Corporation or Swiss Re Corporate Solutions Premier Insurance Corporation's** toll-free number for information or to make a complaint at:

1-800-338-0753

You may also write to **Swiss Re Corporate Solutions America Insurance Corporation or Swiss Re Corporate Solutions Premier Insurance Corporation** at the following address:

1200 Main Street, Suite 800
Kansas City, MO 64105

You may contact the **Texas Department of Insurance** to obtain information on companies, coverages, rights or complaints at:

1- 800-252-3439

You may write the **Texas Department of Insurance:**

P.O. Box 149104
Austin, TX 78714-9104
Fax: (512) 475-1771
Web: http://www.tdi.state.tx.us
E-mail:ConsumerProtection@tdi.state.tx.us

PREMIUM OR CLAIM DISPUTES:
Should you have a dispute concerning your premium or about a claim you should first contact the **Swiss Re Corporate Solutions America Insurance Corporation or Swiss Re Corporate Solutions Premier Insurance Corporation.** If the dispute is not resolved, you may contact the Texas Department of Insurance.

ATTACH THIS NOTICE TO YOUR POLICY: This notice is for information only and does not become a part or condition of the attached document.

AVISO IMPORTANTE

Para obtener informacion o para someter un queja:

Puede comunicarse con **Jeffrey Goldberg, Vice President - Claims,** al **1-800-338-0753.**

Usted puede llamr al numero de telefono gratis de **Swiss Re Corporate Solutions America Insurance Corporation o Swiss Re Corporate Solutions Premier Insurance Corporation's** para informacion o para someter una queja al:

1-800-338-0753

Usted tambien puede escribir a **Swiss Re Corporate Solutions America Insurance Corporation o Swiss Re Corporate Solutions Premier Insurance Corporation** al:

1200 Main Street, Suite 800
Kansas City, MO 64105

Puede escribir al **Departmento de Seguros de Texas** para obtener informacion acerca de companias, coberturas, derechos o quejas al:

1- 800-252-3439

Puede escribir al **Departmento de Seguros de Texas:**

P.O. Box 149104
Austin, TX 78714-9104
Fax: (512) 475-1771
Web: http://www.tdi.state.tx.us
E-mail:ConsumerProtection@tdi.state.tx.us

DISPUTAS SOBRE PRIMAS O RECLAMOS:
Si tiene una disputa concerniente a su prima o a un reclamo, debe comunicarse con el **Swiss Re Corporate Solutions America Insurance Corporation o Swiss Re Corporate Solutions Premier Insurance Corporation** primero. Si no se resuelve la disputa, puede entonces comunicarse con el Departmento de Seguros de Texas.

UNA ESTE AVISO A SU POLIZA:
Este aviso es solo para proposito de infromacion y no se converte en parte o condicion del documento adjunto.

CITY OF HUTTO
MAINTENANCE BOND
BOND No. 2377875

THE STATE OF TEXAS §
§
COUNTY OF WILLIAMSON §

KNOW ALL MEN BY THESE PRESENTS,

That, Liberty Civil Construction, LLC, a [corporation, limited partnership, etc.] having a principal place of business at 2937 Hero Way, Leander, TX 78641, as Principal and Swiss Re Corporate Solutions America Insurance Corporation, a corporation authorized to issue surety bonds in the State of Texas, and having an office and place of business in Texas at 1200 Main St., Suite 800, Kansas City, MO 64105, as Surety, are held and firmly bound unto the CITY OF HUTTO, TEXAS, a home-rule municipal corporation organized under the laws of the State of Texas with principal administrative offices at Hutto City Hall, 500 West Live Oak Street, Hutto, Texas 78634 in Williamson County, Texas, as Obligee, in the sum of Three Million Six Hundred Forty-six Thousand Seven Hundred Fourteen & 68/100 DOLLARS ($3,646,714.68) lawful money of the United States, for the payment whereof to the Obligee, the Principal and the Surety bind themselves, their heirs, executors, administrators, successors, and assigns, jointly and severally, firmly to these presents:

WHEREAS, Principal is responsible for the completion of Lidell Walker Phase 2B located at Hutto, Texas in Williamson County, Texas (the "Work"), [as per the map or plat thereof recorded in 2025006497 of the Deed Records of Williamson County, Texas under Williamson County Clerk File Number and ;][under a certain contract between Principal and Obligee for said Work approved by the Hutto City Council by the attached Resolution;

WHEREAS, Principal has certified in writing to Obligee that all required Work has been completed in accordance with the approved construction plans and Obligee's applicable standards and specifications;

WHEREAS, Principal has requested that the City of Hutto, Texas acknowledge completion and acceptance of the Work as provided by the Code of Ordinances of the City of Hutto, Texas, the issuance of such certificate being subject to the requirement that Principal shall correct all defects within publicly dedicated improvements and Work done for the benefit of Obligee that occur within two (2) years of the date of the acceptance of the Work;

WHEREAS, under the terms of the specifications for the Work, Principal is required to give a bond equal to 100% of the amount of the contract to protect the Obligee against the result of faulty materials or workmanship for a period of 24 months after acceptance of the Work; and

WHEREAS, this Bond is intended as satisfying that bonding obligation of Principal to Obligee.

NOW, THEREFORE, THE CONDITION OF THIS OBLIGATION is such that if the above-

named Principal shall correct any defects to the Work within 24 mo from the date of the issuance of the above-described certificate of completion, then this obligation is to be void; otherwise, to remain in full force and effect.

It is hereby understood and agreed that if Principal shall fail to correct any defects in the required improvements as required by such ordinances and regulations, then the [Planning Commission of the City of Hutto, Texas][the Obligee] may thereupon declare this bond to be in default and collect the sum remaining payable thereunder and upon receipt of the proceeds thereof, the Obligee may install or repair such improvements as are covered by this bond.

IN WITNESS WHEREOF, the said Principal and Surety have signed and sealed this instrument this 22nd **day of** April **20** 26.

Liberty Civil Construction, LLC
Principal

By:
Title: Michael Ehrhardt, President
Address: 2937 Hero Way
Leander, TX 78641

Swiss Re Corporate Solutions America Insurance Corporation
Surety

By:
Title: Kimberly Rochelle Gonzalez, Attorney-in-Fact
Address: 1200 Main St., Suite 800
Kansas City, MO 64105

The name and address of the Resident Agent of Surety in Williamson County, Texas, is:
Acrisure, LLC - Bryan K. Moore
32335 US Highway 281 N., Ste. 1101, Bulverde, TX 78163

SWISS RE CORPORATE SOLUTIONS

SWISS RE CORPORATE SOLUTIONS AMERICA INSURANCE CORPORATION ("SRCSAIC")
SWISS RE CORPORATE SOLUTIONS PREMIER INSURANCE CORPORATION ("SRCSPIC")
SWISS REINSURANCE AMERICA CORPORATION ("SRAC")

GENERAL POWER OF ATTORNEY

KNOW ALL MEN BY THESE PRESENTS, THAT SRCSAIC, a corporation duly organized and existing under laws of the State of Missouri, and having its principal office in the City of Kansas City, Missouri, and SRCSPIC, a corporation organized and existing under the laws of the State of Missouri and having its principal office in the City of Kansas City, Missouri, and SRAC, a corporation organized and existing under the laws of the State of New York and having its principal office in the City of Armonk, New York, each does hereby make, constitute, and appoint:

JOHN R. WARD, THOMAS DOUGLAS MOORE, EMILY ALLISON MIKESKA, ALLYSON W. DEAN, TROY RUSSELL KEY, DEBRA LEE MOON, ANDREA ROSE CRAWFORD, SANDRA LEE RONEY,

FAITH ANN HILTY, ANDREW GARETH ADDISON, ELIZABETH ORTIZ, ANA OWENS, ANDREW PATRICK CLARK, KIMBERLY ROCHELLE GONZALEZ, CRYSTAL GAIL LANGHORN,

STEVEN WAYNE LEWIS, SHERI RENEE ALLEN, PEGGY GRADEL HOGAN, TERESA AYALA, KELLI A GORHAM, MARK ROBERT ADAMS, CORY KIPER, ROSS RUDOLPH LARIS AND BAILEE MARIE ISLAS JOINTLY OR SEVERALLY

Its true and lawful Attorney(s)-in-Fact, to make, execute, seal and deliver, for and on its behalf and as its act and deed, bonds, consents of surety, or other writings obligatory in the nature of a bond on behalf of each of said Companies, as surety, on contracts of suretyship as are or may be required or permitted by law, regulation, contract or otherwise, provided that no bond or undertaking or contract or suretyship executed under this authority shall exceed the amount of:

TWO HUNDRED FIFTY MILLION (250,000,000.00) DOLLARS

This Power of Attorney is granted and is signed by facsimile under and by the authority of the following Resolutions adopted by the Boards of Directors of both SRCSAIC and SRCSPIC at meetings duly called and held on the 18th of November 2021 and SRAC at a meeting duly called and held on the 7th of November 2025:

"RESOLVED, that any two of the President, any Managing Director, any Senior Vice President, any Vice President, the Secretary or any Assistant Secretary be, and each or any of them hereby is, authorized to execute a Power of Attorney qualifying the attorney named in the given Power of Attorney to execute on behalf of the Corporation bonds, undertakings and all contracts of surety, and that each or any of them hereby is authorized to attest to the execution of any such Power of Attorney and to attach therein the seal of the Corporation; and it is

FURTHER RESOLVED, that the signature of such officers and the seal of the Corporation may be affixed to any such Power of Attorney or to any certificate relating thereto by facsimile, and any such Power of Attorney or certificate bearing such facsimile signatures or facsimile seal shall be binding upon the Corporation when so affixed and in the future with regard to any bond, undertaking or contract of surety to which it is attached."

SWISS RE CORPORATE SOLUTIONS AMERICA INSURANCE CORPORATION CORPORATE SEAL 1973 MISSOURI

SWISS RE CORPORATE SOLUTIONS PREMIER INSURANCE CORPORATION CORPORATE SEAL MISSOURI

By _____
David Satory, Senior Vice President of SRCSAIC & Senior Vice President of SRCSPIC & Senior Vice President of SRAC

By _____
Gabriel Jacquez, Senior Vice President of SRCSAIC & Senior Vice President of SRCSPIC & Senior Vice President of SRAC

SWISS REINSURANCE AMERICA CORPORATION CORPORATE SEAL 1940 NEW YORK

IN WITNESS WHEREOF, SRCSAIC, SRCSPIC, and SRAC have caused their official seals to be hereunto affixed, and these presents to be signed by their authorized officers this 26th day of January, 20 26.

Swiss Re Corporate Solutions America Insurance Corporation
Swiss Re Corporate Solutions Premier Insurance Corporation
Swiss Reinsurance America Corporation

State of Illinois
County of Cook ss

On this 26th day of January, 20 26, before me, a Notary Public personally appeared David Satory, Senior Vice President of SRCSAIC and Senior Vice President of SRCSPIC and Senior Vice President of SRAC, and Gabriel Jacquez, Senior Vice President of SRCSAIC and Senior Vice President of SRCSPIC and Senior Vice President of SRAC, personally known to me, who being by me duly sworn, acknowledged that they signed the above Power of Attorney as officers of and acknowledged said instrument to be the voluntary act and deed of their respective companies.

OFFICIAL SEAL
KAREN M SZWEDA
Notary Public, State of Illinois
Commission No. 978628
My Commission Expires September 26, 2027

Karen M. Szweda, Notary

I, Jeffrey Goldberg, the duly elected Senior Vice President and Assistant Secretary of SRCSAIC and SRCSPIC and SRAC, do hereby certify that the above and foregoing is a true and correct copy of a Power of Attorney given by said SRCSAIC and SRCSPIC and SRAC, which is still in full force and effect.

IN WITNESS WHEREOF, I have set my hand and affixed the seals of the Companies this 22nd day of April, 20 26.

Jeffrey Goldberg, Senior Vice President & Assistant Secretary of SRCSAIC and SRCSPIC and SRAC

IMPORTANT NOTICE

In order to obtain information or make a complaint:

You may contact **Jeffrey Goldberg, Vice President - Claims,** at **1-800-338-0753**.

You may call **Swiss Re Corporate Solutions America Insurance Corporation or Swiss Re Corporate Solutions Premier Insurance Corporation's** toll-free number for information or to make a complaint at:

1-800-338-0753

You may also write to **Swiss Re Corporate Solutions America Insurance Corporation or Swiss Re Corporate Solutions Premier Insurance Corporation** at the following address:

1200 Main Street, Suite 800
Kansas City, MO 64105

You may contact the **Texas Department of Insurance** to obtain information on companies, coverages, rights or complaints at:

1- 800-252-3439

You may write the **Texas Department of Insurance:**

P.O. Box 149104
Austin, TX 78714-9104
Fax: (512) 475-1771
Web: http://www.tdi.state.tx.us
E-mail:ConsumerProtection@tdi.state.tx.us

PREMIUM OR CLAIM DISPUTES:
Should you have a dispute concerning your premium or about a claim you should first contact the **Swiss Re Corporate Solutions America Insurance Corporation or Swiss Re Corporate Solutions Premier Insurance Corporation**. If the dispute is not resolved, you may contact the Texas Department of Insurance.

ATTACH THIS NOTICE TO YOUR POLICY: This notice is for information only and does not become a part or condition of the attached document.

AVISO IMPORTANTE

Para obtener informacion o para someter un queja:

Puede comunicarse con **Jeffrey Goldberg, Vice President - Claims,** al **1-800-338-0753**.

Usted puede llamr al numero de telefono gratis de **Swiss Re Corporate Solutions America Insurance Corporation o Swiss Re Corporate Solutions Premier Insurance Corporation's** para informacion o para someter una queja al:

1-800-338-0753

Usted tambien puede escribir a **Swiss Re Corporate Solutions America Insurance Corporation o Swiss Re Corporate Solutions Premier Insurance Corporation** al:

1200 Main Street, Suite 800
Kansas City, MO 64105

Puede escribir al **Departmento de Seguros de Texas** para obtener informacion acerca de companias, coberturas, derechos o quejas al:

1- 800-252-3439

Puede escribir al **Departmento de Seguros de Texas:**

P.O. Box 149104
Austin, TX 78714-9104
Fax: (512) 475-1771
Web: http://www.tdi.state.tx.us
E-mail:ConsumerProtection@tdi.state.tx.us

DISPUTAS SOBRE PRIMAS O RECLAMOS:
Si tiene una disputa concerniente a su prima o a un reclamo, debe comunicarse con el **Swiss Re Corporate Solutions America Insurance Corporation o Swiss Re Corporate Solutions Premier Insurance Corporation** primero. Si no se resuelve la disputa, puede entonces comunicarse con el Departmento de Seguros de Texas.

UNA ESTE AVISO A SU POLIZA:
Este aviso es solo para proposito de infromacion y no se converte en parte o condicion del documento adjunto.

ORIGINAL PLOT SIZE: 22 X 34

J:\Projects\Prairie Winds (Lidell Walker)\(695-001)\02 Design\02 Onsite\01 Section Design\Phase 2B\02 Gas\PRAIRIE WINDS - PHASE 2B.dwg Layout: COVER SHEET Plotted: 7/3/2025 4:25:41 PM

UNIVERSAL NATURAL GAS / CENTRIC FIBER

PRAIRIE WINDS - PHASE 2B

NATURAL GAS, CONDUIT & FIBER PLAN

WILLIAMSON COUNTY, TEXAS

July 3, 2025

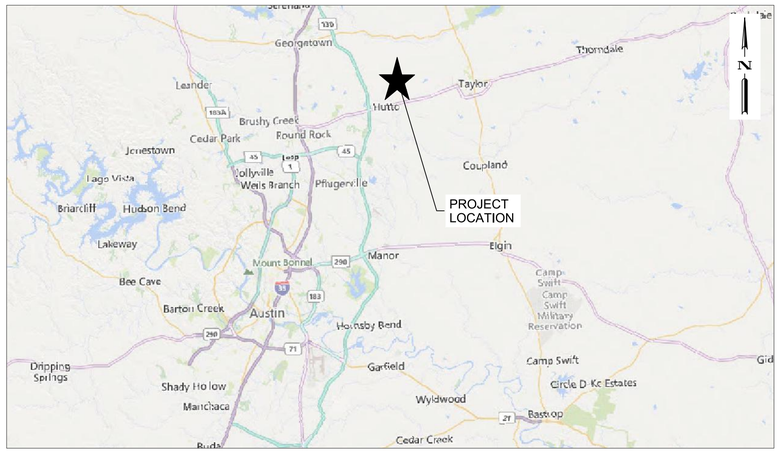

VICINITY MAP

SCALE: N.T.S.



LOCATION MAP

SCALE: N.T.S.

SHEET INDEX	
NO.	TITLE
01	COVER SHEET
02	GENERAL NOTES & LEGEND
03	DETAILS SHEET
04	NATURAL GAS OVERALL MAP
05	NATURAL GAS PLAN
06	NATURAL GAS PLAN
07	CONDUIT OVERALL MAP
08	CONDUIT PLAN
09	CONDUIT PLAN
10	FIBER OVERALL MAP
11	FIBER PLAN
12	FIBER PLAN

CONTRACTOR TO CONTACT THE CONSTRUCTION PROJECT MANAGER FOR ANY QUESTIONS REGARDING THIS PROJECT:

MYLES HERNANDEZ
CONSTRUCTION PROJECT MANAGER
832.592.0544

811 Know what's **below.** **Call** before you dig.

DATE: July 3, 2025
TOTAL # OF LOTS: 1
TOTAL # SERVICE LEADS: 0

REV	DESCRIPTION	DATE	APR

UNIGAS CENTRIC FIBER
UNIVERSAL NATURAL GAS

PRAIRIE WINDS - PHASE 2B

COVER SHEET

STATE OF TEXAS
RICHARD WALTER BARD JR
116819
LICENSED PROFESSIONAL ENGINEER
7/3/2025

DESIGN: JT
EPM: BS | RVW: RB
PROJECT ID: 695-001
SHEET 01 OF 12

J:\Projects\Prairie Winds (Lidell Walker)\(695-001)\02 Design\02 Onsite\01 Section Design\Phase 2B\02 Gas\PRAIRIE WINDS - PHASE 2B.dwg Layout: GENERAL NOTES & LEGEND Plotted: 7/3/2025 4:25:42 PM ORIGINAL PLOT SIZE: 22 X 34

GENERAL NOTES:

1. ALL GAS LINES 4" DIAMETER OR SMALLER SHALL BE FUSIBLE MEDIUM DENSITY POLY ETHYLENE (MDPE) AND ALL GAS LINES 6" OR LARGER SHALL BE FUSIBLE HIGH DENSITY POLY ETHYLENE (HDPE), UNLESS OTHERWISE NOTED ON THE PLANS.
2. ALL UTILITY SYMBOLS SHOWN REPRESENT APPROXIMATE LOCATIONS UNLESS OTHERWISE NOTED.
3. GAS AND/OR FIBER CONDUIT MAIN/SERVICES SHALL MAINTAIN CLEARANCE OF 12" FROM ALL OTHER UTILITY INFRASTRUCTURE AT ALL CROSSINGS UNLESS OTHERWISE APPROVED BY ENGINEER.
4. ALL GAS DISTRIBUTION MAINS SHALL BE PER THE STANDARDS AND SPECIFICATIONS OF THE UTILITY PROVIDER.
5. ALL PIPE SHALL BE BUTT FUSED.
6. ALL FITTINGS AND COUPLINGS SHALL BE APPROVED BY THE UTILITY COMPANY.
7. GAS AND/OR FIBER CONDUIT MAINS SHALL BE CAPPED AT ALL DEAD END LOCATIONS WITH SOCKET FUSED END CAPS PER UTILITY PROVIDER STANDARDS AND SPECIFICATIONS.
8. CONTRACTOR SHALL INSTALL ALL TEES, BENDS, AND OTHER FITTINGS PRIOR TO CONTRACTOR COVERING THEM UP.
9. TREES WITHIN THE RIGHT OF WAY AND IN LINE WITH TRENCHING ACTIVITIES SHALL BE REMOVED, UNLESS NOTIFIED BY THE UTILITY COMPANY.
10. CONTRACTOR TO MEET LOCAL JURISDICTION SPECIFICATIONS FOR SLEEVING AND COMPACTION ABOVE NATURAL GAS AND/OR FIBER CONDUIT LINE. REGARDING COMPACTION ABOVE NATURAL GAS AND/OR FIBER CONDUIT LINE; EACH LAYER OF MATERIAL SHALL BE COMPACTED TO A MINIMUM 95% DENSITY AND TESTED FOR DENSITY AND MOISTURE PER LOCAL JURISDICTION REQUIREMENTS. THE NUMBER AND LOCATION OF REQUIRED TESTS SHALL BE DETERMINED BY THE LOCAL JURISDICTIONS INSPECTOR. AT A MINIMUM, TESTS SHALL BE TAKEN EVERY 100 LF FOR EACH LIFT.
11. CONTRACTOR TO VERIFY LOCATION OF ELECTRICAL SERVICE LEAD LOCATION AND PLACE GAS AND/OR FIBER CONDUIT SERVICE LEADS ON THE OPPOSITE SIDE OF THE ELECTRICAL SERVICE LEADS WITHIN THE SAME LOT.
12. EXCESS FLOW VALVES ARE REQUIRED ON ALL SERVICE LINES.

CONSTRUCTION NOTES:

1. CONTRACTOR TO PLACE END STOPS AT THE END OF THE FIBER CONDUIT LINES THAT DO NOT HAVE FUTURE CONNECTIONS.
2. CONTRACTOR TO PLACE LOCATE BALLS AT SLEEVING LOCATIONS AND ACCESS (TAPER) POINTS.
3. CONTRACTOR TO SPRAY PAINT OUTER SURFACE OF CONDUIT LINE(S) IF MORE THAN TWO OF THE SAME CONDUIT SIZES ARE PLACED IN THE SAME TRENCH, TO DIFFERENTIATE.

LEGEND

GAS TRENCH TOTAL	APPROX. 2,091 LINEAR FEET
8in GAS	8" NATURAL GAS LINE (APPROX. 1,507 LF FOR ENTIRE SECTION)
4in GAS	4" NATURAL GAS LINE (APPROX. 306 LF FOR ENTIRE SECTION)
2in GAS	2" NATURAL GAS LINE (APPROX. 278 LF FOR ENTIRE SECTION)
	GAS CAP (5 TOTAL)
	GAS REDUCER (8 TOTAL)
	3 WAY TEE (5 TOTAL)
	90° BEND (3 TOTAL)
CONDUIT TRENCH TOTAL	APPROX. 2,014 LINEAR FEET
	1.25" FIBER DUCT (APPROX. 500 LINEAR FEET)
	3 - 1.25" FIBER DUCT (APPROX. 1,514 LINEAR FEET)
	HANDHOLE (3 TOTAL)
	EASEMENTS FOR OTHERS
	RIGHT OF WAY
	PROPERTY LINE
	PROJECT BOUNDARY LINE
G/FO	EXISTING 8" NATURAL GAS LINE & (3) - 1.25" FIBER DUCT
8in GAS	EXISTING 8" NATURAL GAS LINE
2in GAS	EXISTING 2" NATURAL GAS LINE
	EXISTING 1.25" FIBER DUCT
	EXISTING HANDHOLE

REV	DESCRIPTION	DATE	APR

UNIGAS CENTRIC FIBER
UNIVERSAL NATURAL GAS

Know what's below. Call before you dig.

DATE: July 3, 2025
TOTAL # OF LOTS: 1
TOTAL # SERVICE LEADS: 0

PRAIRIE WINDS - PHASE 2B

GENERAL NOTES & LEGEND

STATE OF TEXAS
RICHARD WALTER BARD JR
116819
LICENSED PROFESSIONAL ENGINEER
7/3/2025

DESIGN: JT	
EPM: BS	RVW: RB
PROJECT ID: 695-001	
SHEET 02 OF 12	

ORIGINAL PLOT SIZE: 22 X 34

J:\Projects\Prairie Winds (Lidell Walker)\(695-001)\02 Design\02 Onsite\01 Section Design\Phase 2B\02 Gas\PRAIRIE WINDS - PHASE 2B.dwg Layout: DETAILS SHEET Plotted: 7/3/2025 4:25:43 PM

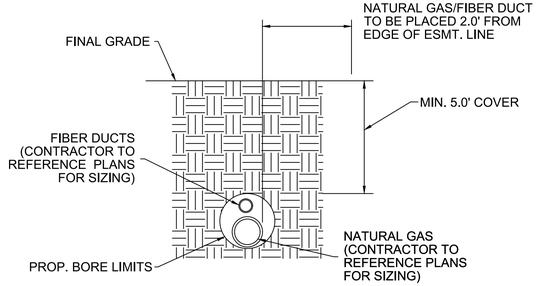

TYPICAL NATURAL GAS/FIBER DUCT JOINT BORE DETAIL
FOR DIRT/ROCK CONDITION
NTS

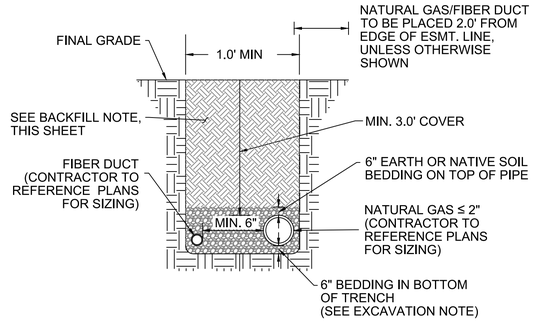

TYPICAL NATURAL GAS/FIBER DUCT JOINT TRENCH DETAIL
FOR DIRT CONDITION
NTS

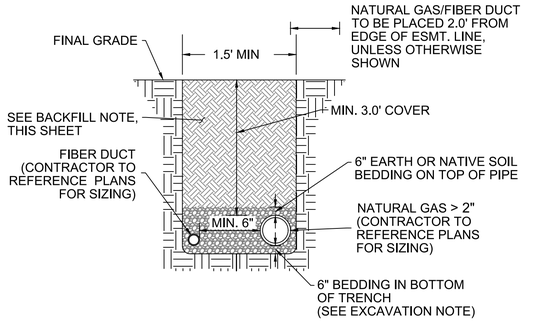

TYPICAL NATURAL GAS/FIBER DUCT JOINT TRENCH DETAIL
FOR DIRT CONDITION
NTS

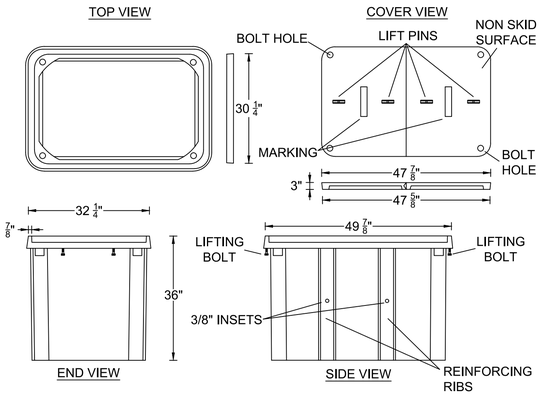

HANDHOLE & COVER
NTS

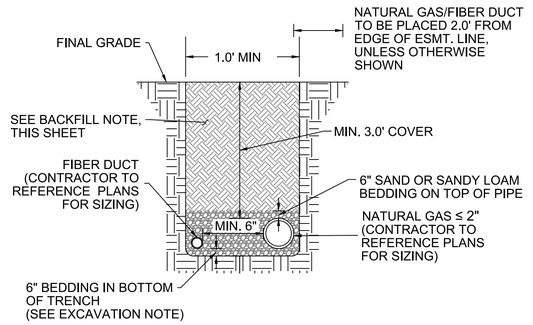

TYPICAL NATURAL GAS/FIBER DUCT JOINT TRENCH DETAIL
FOR ROCK CONDITION
NTS

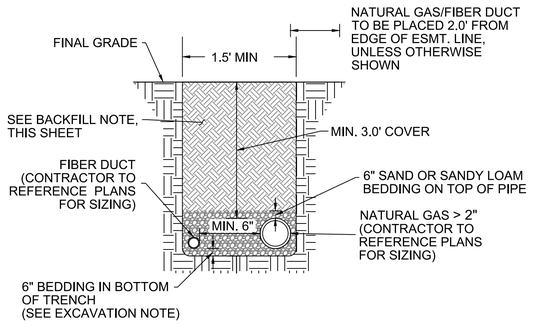

TYPICAL NATURAL GAS/FIBER DUCT JOINT TRENCH DETAIL
FOR ROCK CONDITION
NTS

EXCAVATION NOTE:

ALL EXCAVATIONS SHALL BE OPEN CUT, WITH BANKS KEPT AS NEARLY VERTICAL AS POSSIBLE. THE TRENCH FLOOR SHALL PROVIDE A UNIFORM BEARING FOR EACH FULL LENGTH OF PIPE SECTION. PERFORM ALL EXCAVATIONS OF WHATEVER SUBSTANCE ENCOUNTERED TO THE DEPTHS SHOWN OR INDICATED ON THE DRAWINGS. PIPES AND CONDUITS SHALL BE BEDDED WITH A MINIMUM OF 6" OF BEDDING OF MATERIAL ABOVE AND BELOW PIPES AND CONDUITS. CONTRACTORS ARE RESPONSIBLE FOR ALL SAFETY REQUIREMENTS (OSHA AND ANY OTHER AGENCIES THAT APPLY) ASSOCIATED WITH TRENCH, BORE PIT, AND BELL HOLE CONSTRUCTION AND SHALL BE REQUIRED TO HAVE A TRENCH SAFETY PLAN PREPARED BY AN APPROVED ENGINEER, REGISTERED IN THE STATE THE WORK IS LOCATED.

BEDDING:

YES☒ NO☐ TO FURNISH BANK SAND OR SANDY LOAM BEDDING.

FURNISH BANK SAND OR SANDY LOAM BEDDING CONSISTING OF SOIL CONTAINING NO DELETERIOUS MATERIAL SUCH AS TRASH, NO ROCK LARGER THAN ½ INCH (MEASURED IN ANY DIRECTION), WOOD FRAGMENTS, ORGANIC, OR OTHER OBJECTIONABLE MATERIAL.

(THE CENTRIC PROJECT MANAGER HAS AUTHORITY TO DIRECT CONTRACTOR AS TO WHICH SECTIONS OF UTILITY TRENCH WILL NOT REQUIRE BANK SAND OR SANDY LOAM AS BEDDING MATERIAL.)

YES☐ NO☒ TO FURNISH EARTH OR NATIVE SOIL BEDDING.

FURNISH EARTH OR NATIVE SOIL BEDDING CONSISTING OF SOIL CONTAINING NO DELETERIOUS MATERIAL SUCH AS TRASH, NO ROCK LARGER THAN ½ INCHE (MEASURED IN ANY DIRECTION), WOOD FRAGMENTS, ORGANIC, OR OTHER OBJECTIONABLE MATERIAL. SUPPLY THE MATERIAL FROM EITHER THE MATERIAL REMOVED FROM THE EXCAVATION OR FROM OFFSITE SOURCES.

BACKFILL:

FURNISH EARTH OR NATIVE SOIL BACKFILL CONSISTING OF SOIL CONTAINING NO DELETERIOUS MATERIAL SUCH AS TRASH, NO ROCK LARGER THAN 3-INCH (MEASURED ANY DIRECTION), WOOD FRAGMENTS, ORGANIC, OR OTHER OBJECTIONABLE MATERIAL. SUPPLY THE MATERIAL FROM EITHER THE MATERIAL REMOVED FROM THE EXCAVATION OR FROM OFFSITE SOURCES.

REV	DESCRIPTION	DATE
		APR

UNIGAS CENTRIC FIBER
UNIVERSAL NATURAL GAS

PRAIRIE WINDS - PHASE 2B

DETAILS SHEET

STATE OF TEXAS
RICHARD WALTER BARD JR
116819
LICENSED PROFESSIONAL ENGINEER
7/3/2025

Know what's below. Call before you dig.

DATE: July 3, 2025
TOTAL # OF LOTS: 1
TOTAL # SERVICE LEADS: 0

DESIGN: JT	
EPM: BS	RVW: RB
PROJECT ID: 695-001	
SHEET 03 OF 12	

ORIGINAL PLOT SIZE: 22 X 34
Layout: NATURAL GAS OVERALL MAP Plotted: 7/3/2025 4:25:47 PM
J:\Projects\Prairie Winds (Lidell Walker)\695-001\02 Design\02 Onsite\01 Section Design\Phase 2B\02 Gas\PRAIRIE WINDS - PHASE 2B.dwg

PRAIRIE WINDS PHASE 5

PRAIRIE WINDS PHASE 6

FLORA PHASE 1A - SECTION 3

PRAIRIE WINDS PHASE 2

PRAIRIE WINDS PHASE 3

PRAIRIE WINDS PHASE 4

SHEET 05

SHEET 06

G/FO

8in GAS

HILLSBORO DRIVE

SEABRIGHT AVE. 70' R.O.W.

MAIN HIPPO DRIVE 120' R.O.W.

UNIVERSAL DRIVE

N

0 50' 100' 200'

SCALE: 1" = 100'

REV	DESCRIPTION	DATE	APR

UNIGAS CENTRIC FIBER
UNIVERSAL NATURAL GAS

PRAIRIE WINDS - PHASE 2B

NATURAL GAS OVERALL MAP

STATE OF TEXAS
RICHARD WALTER BARD JR.
116819
LICENSED PROFESSIONAL ENGINEER
7/3/2025

Know what's **below.**
Call before you dig.

DATE: July 3, 2025
TOTAL # OF LOTS: 1
TOTAL # SERVICE LEADS: 0

DESIGN: JT	
EPM: BS	RVW: RB
PROJECT ID: 695-001	
SHEET 04 OF 12	

ORIGINAL PLOT SIZE: 22 X 34
J:\Projects\Prairie Winds (Lidell Walker)\(695-001)\02 Design\02 Onsite\01 Section Design\Phase 2B\02 Gas\PRAIRIE WINDS - PHASE 2B.dwg Layout: NATURAL GAS PLAN Plotted: 7/3/2025 4:25:50 PM

PRAIRIE WINDS PHASE 5

PRAIRIE WINDS PHASE 6

MATCH LINE (SEE SHEET 06)

MATCH LINE (SEE SHEET 06)

SEABRIGHT AVE. 70' R.O.W.

CONTRACTOR TO STUB OUT AND CAP 4" GAS MAIN FOR FUTURE CONNECTION

4" GAS CAP

2" 90° BEND

CONTRACTOR TO STUB OUT AND CAP 2" GAS MAIN FOR FUTURE CONNECTION

2" GAS CAP

CONTRACTOR TO REFERENCE PRAIRIE WINDS - PHASE 2 GAS PLANS FOR CONNECTION

CONTRACTOR TO CONNECT 8" GAS MAIN TO EXISTING 8" GAS MAIN STUBOUT

8" 90° BEND

8" 90° BEND

8in GAS

4in GAS

4"x2" REDUCER

4" TEE

2in GAS

6"x4" REDUCER

8"x6" REDUCER

2 - 8" TEE

2" GAS CAP

CONTRACTOR TO STUB OUT AND CAP 2" GAS MAIN FOR FUTURE CONNECTION

2" TEE

MAIN HIPPO DRIVE 120' R.O.W.

6"x4" REDUCER

8"x6" REDUCER

4" GAS CAP

CONTRACTOR TO STUB OUT AND CAP 4" GAS MAIN FOR FUTURE CONNECTION

SEABRIGHT AVE. 70' R.O.W.

PRAIRIE WINDS PHASE 4

MATCH LINE (SEE SHEET 06)

UNIVERSAL DRIVE

PRAIRIE WINDS PHASE 2

PRAIRIE WINDS PHASE 3

N

0 25' 50' 100'

SCALE: 1" = 50'

REV	DESCRIPTION	DATE	APR

UNIGAS CENTRIC FIBER
UNIVERSAL NATURAL GAS

PRAIRIE WINDS - PHASE 2B

NATURAL GAS PLAN

STATE OF TEXAS
RICHARD WALTER BARD JR.
116819
LICENSED PROFESSIONAL ENGINEER
7/3/2025

811 Know what's **below.** **Call** before you dig.

DATE: July 3, 2025
TOTAL # OF LOTS: 1
TOTAL # SERVICE LEADS: 0

DESIGN: JT	
EPM: BS	RVW: RB
PROJECT ID: 695-001	
SHEET 05 OF 12	

ORIGINAL PLOT SIZE: 22 X 34

J:\Projects\Prairie Winds (Lidell Walker)\(695-001)\02 Design\02 Onsite\01 Section Design\Phase 2B\02 Gas\PRAIRIE WINDS - PHASE 2B.dwg Layout: NATURAL GAS PLAN (2) Plotted: 7/3/2025 4:25:54 PM



N

0 25' 50' 100'

SCALE: 1" = 50'

REV	DESCRIPTION	DATE	APR

UNIGAS CENTRIC FIBER
UNIVERSAL NATURAL GAS

PRAIRIE WINDS - PHASE 2B

NATURAL GAS PLAN

STATE OF TEXAS
RICHARD WALTER BARD JR
116819
LICENSED
PROFESSIONAL ENGINEER

7/3/2025

811 Know what's **below.** **Call** before you dig.

DATE: July 3, 2025
TOTAL # OF LOTS: 1
TOTAL # SERVICE LEADS: 0

DESIGN: JT	
EPM: BS	RVW: RB
PROJECT ID: 695-001	
SHEET 06 OF 12	

ORIGINAL PLOT SIZE: 22 X 34

J:\Projects\Prairie Winds (Lidell Walker)\(695-001)\02 Design\02 Onsite\01 Section Design\Phase 2B\02 Gas\PRAIRIE WINDS - PHASE 2B.dwg Layout: CONDUIT OVERALL MAP Plotted: 7/3/2025 4:25:57 PM

PRAIRIE WINDS
PHASE 5

PRAIRIE WINDS
PHASE 6

FLORA
PHASE 1A - SECTION 3

SHEET 09

SHEET 08

PRAIRIE WINDS
PHASE 2

PRAIRIE WINDS
PHASE 3

PRAIRIE WINDS
PHASE 4

HALLSPORT DRIVE

UNIVERSAL DRIVE

SEABRIGHT AVE.
70' R.O.W.

MAIN HIPPO DRIVE
120' R.O.W.

HH-26-03

HH-26-02

HH-26-01

HH-02-03

HH-02-04

G/FO

N

0 50' 100' 200'

SCALE: 1" = 100'

REV	DESCRIPTION	DATE	APR

UNIGAS CENTRIC FIBER
UNIVERSAL NATURAL GAS

PRAIRIE WINDS - PHASE 2B

CONDUIT OVERALL MAP

STATE OF TEXAS
RICHARD WALTER BARD JR
116819
LICENSED PROFESSIONAL ENGINEER

7/3/2025

811 Know what's below. Call before you dig.

DATE: July 3, 2025
TOTAL # OF LOTS: 1
TOTAL # SERVICE LEADS: 0

DESIGN: JT	
EPM: BS	RVW: RB
PROJECT ID: 695-001	
SHEET 07 OF 12	

ORIGINAL PLOT SIZE: 22 X 34
J:\Projects\Prairie Winds (Lidell Walker)\695-001\02 Design\02 Onsite\01 Section Design\Phase 2B\02 Gas\PRAIRIE WINDS - PHASE 2B.dwg Layout: CONDUIT PLAN Plotted: 7/3/2025 4:26:00 PM

PRAIRIE WINDS PHASE 5

PRAIRIE WINDS PHASE 6

MATCH LINE (SEE SHEET 09)

MATCH LINE (SEE SHEET 09)

SEABRIGHT AVE. 70' R.O.W.

CONTRACTOR TO REFERENCE PRAIRIE WINDS - PHASE 2 FIBER DUCT PLANS FOR CONNECTION

CONTRACTOR TO STUB OUT 1.25" FIBER DUCT AND PLACE END SLEEVE FOR FUTURE CONNECTION

CONTRACTOR TO STUB OUT 1.25" FIBER DUCT AND PLACE END SLEEVE FOR FUTURE CONNECTION

HH-2B-02

HH-2B-01

HH-02-05

MAIN HIPPO DRIVE 120' R.O.W.

SEABRIGHT AVE. 70' R.O.W.

CONTRACTOR TO STUB OUT 1.25" FIBER DUCT AND PLACE END SLEEVE FOR FUTURE CONNECTION

HH-02-04

PRAIRIE WINDS PHASE 2

UNIVERSAL DRIVE

PRAIRIE WINDS PHASE 4

MATCH LINE (SEE SHEET 09)

PRAIRIE WINDS PHASE 3

CONSTRUCTION NOTES:

1. CONTRACTOR TO PLACE END STOPS AT THE END OF THE FIBER CONDUIT LINES THAT DO NOT HAVE FUTURE CONNECTIONS.

2. CONTRACTOR TO PLACE LOCATE BALLS AT SLEEVING LOCATIONS AND ACCESS (TAPER) POINTS.

3. CONTRACTOR TO SPRAY PAINT OUTER SURFACE OF CONDUIT LINE(S) IF MORE THAN TWO OF THE SAME CONDUIT SIZES ARE PLACED IN THE SAME TRENCH, TO DIFFERENTIATE

N

0 25' 50' 100'

SCALE: 1" = 50'

REV	DESCRIPTION	DATE	APR

UNIGAS CENTRIC FIBER
UNIVERSAL NATURAL GAS

PRAIRIE WINDS - PHASE 2B

CONDUIT PLAN

STATE OF TEXAS
RICHARD WALTER BARD JR
116819
LICENSED PROFESSIONAL ENGINEER

7/3/2025

811 Know what's **below.** **Call** before you dig.

DATE: July 3, 2025
TOTAL # OF LOTS: 1
TOTAL # SERVICE LEADS: 0

DESIGN: JT	
EPM: BS	RVW: RB
PROJECT ID: 695-001	
SHEET 08 OF 12	

ORIGINAL PLOT SIZE: 22 X 34

J:\Projects\Prairie Winds (Lidell Walker)\(695-001)\02 Design\02 Onsite\01 Section Design\Phase 2B\02 Gas\PRAIRIE WINDS - PHASE 2B.dwg Layout: CONDUIT PLAN (2) Plotted: 7/3/2025 4:26:03 PM

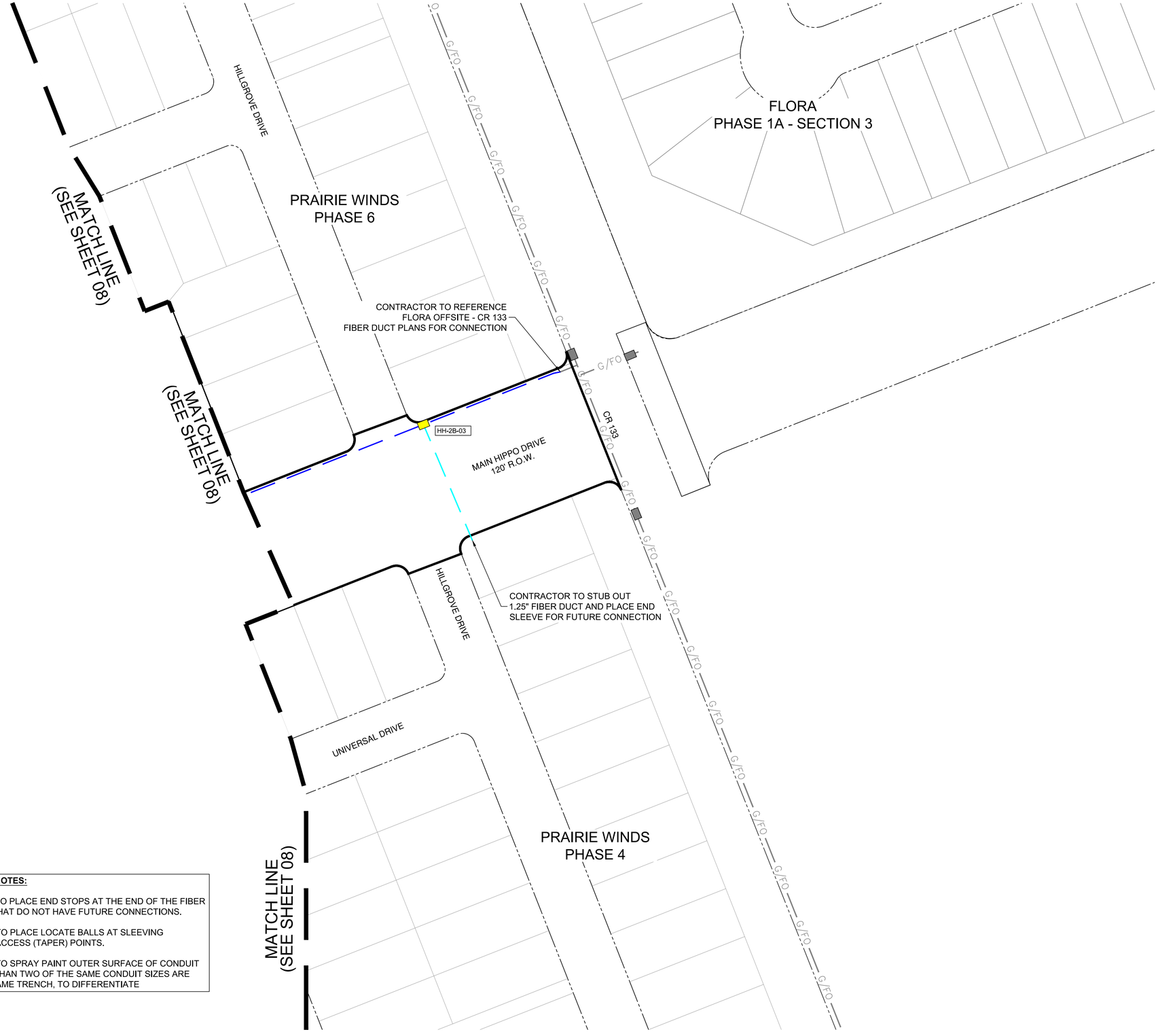

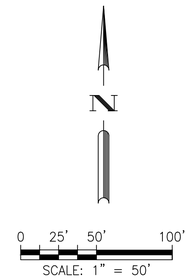

REV	DESCRIPTION	DATE	APR

CONSTRUCTION NOTES:

1. CONTRACTOR TO PLACE END STOPS AT THE END OF THE FIBER CONDUIT LINES THAT DO NOT HAVE FUTURE CONNECTIONS.

2. CONTRACTOR TO PLACE LOCATE BALLS AT SLEEVING LOCATIONS AND ACCESS (TAPER) POINTS.

3. CONTRACTOR TO SPRAY PAINT OUTER SURFACE OF CONDUIT LINE(S) IF MORE THAN TWO OF THE SAME CONDUIT SIZES ARE PLACED IN THE SAME TRENCH, TO DIFFERENTIATE

UNIGAS CENTRIC FIBER
UNIVERSAL NATURAL GAS

PRAIRIE WINDS - PHASE 2B

CONDUIT PLAN

STATE OF TEXAS
RICHARD WALTER BARD JR
116819
LICENSED PROFESSIONAL ENGINEER
7/3/2025

Know what's **below.**
Call before you dig.

DATE: July 3, 2025
TOTAL # OF LOTS: 1
TOTAL # SERVICE LEADS: 0

DESIGN: JT	
EPM: BS	RVW: RB
PROJECT ID: 695-001	
SHEET 09 OF 12	

ORIGINAL PLOT SIZE: 22 X 34

J:\Projects\Prairie Winds (Lidell Walker)\(695-001)\02 Design\02 Onsite\01 Section Design\Phase 2B\02 Gas\PRAIRIE WINDS - PHASE 2B.dwg Layout: FIBER OVERALL MAP Plotted: 7/3/2025 4:26:06 PM

PRAIRIE WINDS
PHASE 5

PRAIRIE WINDS
PHASE 6

FLORA
PHASE 1A - SECTION 3

SHEET 11

SHEET 12

PRAIRIE WINDS
PHASE 2

PRAIRIE WINDS
PHASE 3

PRAIRIE WINDS
PHASE 4

HALLSPORE DRIVE

UNIVERSAL DRIVE

SEABRIGHT AVE.
70' R.O.W.

MAIN HIPPO DRIVE
120' R.O.W.

G/FO

HH-26-03

HH-26-02

HH-26-01

HH-02-03

HH-02-04

N

0 50' 100' 200'

SCALE: 1" = 100'

NOTE:

PENDING FIBER COUNT DESIGN

REV	DESCRIPTION	DATE	APR

UNIGAS CENTRIC FIBER
UNIVERSAL NATURAL GAS

PRAIRIE WINDS - PHASE 2B

FIBER OVERALL MAP

STATE OF TEXAS
RICHARD WALTER BARD JR
116819
LICENSED PROFESSIONAL ENGINEER

7/3/2025

811 Know what's **below.** **Call** before you dig.

DATE: July 3, 2025
TOTAL # OF LOTS: 1
TOTAL # SERVICE LEADS: 0

DESIGN: JT	
EPM: BS	RVW: RB
PROJECT ID: 695-001	
SHEET 10 OF 12	

ORIGINAL PLOT SIZE: 22 X 34

J:\Projects\Prairie Winds (Lidell Walker)(695-001)\02 Design\02 Onsite\01 Section Design\Phase 2B\02 Gas\PRAIRIE WINDS - PHASE 2B.dwg Layout: FIBER PLAN Plotted: 7/3/2025 4:26:10 PM



N

0 25' 50' 100'

SCALE: 1" = 50'

NOTE:

PENDING FIBER COUNT DESIGN

REV	DESCRIPTION	DATE	APR

UNIGAS CENTRIC FIBER
UNIVERSAL NATURAL GAS

PRAIRIE WINDS - PHASE 2B

FIBER PLAN

STATE OF TEXAS
RICHARD WALTER BARD JR
116819
LICENSED PROFESSIONAL ENGINEER
7/3/2025

Know what's **below.**
Call before you dig.

DATE: July 3, 2025
TOTAL # OF LOTS: 1
TOTAL # SERVICE LEADS: 0

DESIGN: JT	
EPM: BS	RVW: RB
PROJECT ID: 695-001	
SHEET 11 OF 12	

ORIGINAL PLOT SIZE: 22 X 34

J:\Projects\Prairie Winds (Lidell Walker)(695-001)\02 Design\02 Onsite\01 Section Design\Phase 2B\02 Gas\PRAIRIE WINDS - PHASE 2B.dwg Layout: FIBER PLAN (2) Plotted: 7/3/2025 4:26:13 PM



N

0 25' 50' 100'

SCALE: 1" = 50'

NOTE:

PENDING FIBER COUNT DESIGN

REV	DESCRIPTION	DATE	APR

UNIGAS CENTRIC FIBER
UNIVERSAL NATURAL GAS

PRAIRIE WINDS - PHASE 2B

FIBER PLAN

STATE OF TEXAS
RICHARD WALTER BARD JR.
116819
LICENSED PROFESSIONAL ENGINEER

7/3/2025

811
Know what's **below.**
Call before you dig.

DATE: July 3, 2025
TOTAL # OF LOTS: 1
TOTAL # SERVICE LEADS: 0

DESIGN: JT	
EPM: BS	RVW: RB
PROJECT ID: 695-001	
SHEET 12 OF 12	

FINAL SUBDIVISION / SITE PROJECT CHECKLIST

Date: 5/5/2026

Name of Project: Lidell Walker PH 2B

Conditional / Final Acceptance Date: _____

Inspector's Name: Carson Monroe Job Number(s): _____

Note: All spaces need to be initialed by Inspector including N/A.

CM 1. Project Construction Summary Date Received: 5/5/2026

CM 2. Engineer's Concurrence Letter Date Received: 5/5/2026

CM 3. Maintenance Bond(s) Date Received: 5/13/26

CM 4. Final Cost & Quantities signed & sealed by engineer Date Received: 5/13/26

CM 5. As-built Reproducible Plans (1-24"X36", pdf scan, ACAD Base Map files< Shape File .SHP) Date Received: 5/5/2026

_____6. TDLR Inspection Report

CM 7. Test Reports

- ✓ Manhole Test
- ✓ TV Test
- _____ Bacteriological Test
- ✓ WW Low Air Pressure Test / Mandrel Test
- _____ Valve & Hydrant Test
- _____ Water Pressure Test

_____ 8. Punch List Date Completed:_____

CM 9. No. of Lots for Subdivisions 2 Total Acres in Subdivision. 8.841

CM 10. Plans showing the location of installed all Dry Utilities. (Electric, Gas and communication lines)

CM 11. Location and elevation of Benchmark from RPLS

CM 12. Map showing Area being accepted.

Comments: _____

_____

_____

Please initial: CM Inspector, _____Supervisor,

OWNER:
GRBK EDGEWOOD, LLC
2805 DALLAS PARKWAY, SUITE 400
PLANO, TX 75093

ENGINEER:
GRAY ENGINEERING INC.
8834 N. CAPITAL OF TEXAS HWY., SUITE 140
AUSTIN, TEXAS 78759
(512) 452-0371
FAX (512) 454-9933

SURVEYOR:
BGE, INC., TBPE F-1046
101 WEST HENNA BLVD, SUITE 400
AUSTIN, TX 78728
(512) 879-0400

UTILITY PROVIDERS:
JONAH SUD WATER
ONCOR ENERGY
CENTRIC GAS
HUTTO WASTEWATER

NOTES:

1. THIS PROJECT IS LOCATED IN THE TURKEY CREEK-BRUSHY CREEK WATERSHED AND ARE CLASSIFIED AS A SUBURBAN WATER SUPPLY WATERSHED.
2. NO PORTION OF THIS PROJECT IS LOCATED WITHIN THE EDWARDS AQUIFER RECHARGE ZONE OR CONTRIBUTING ZONE.
3. THIS PROJECT IS LOCATED WITHIN THE CITY OF HUTTO WITHIN WILLIAMSON COUNTY.
4. NO PORTION OF THIS TRACT IS ENCROACHED BY ANY SPECIAL FLOOD HAZARD AREAS INUNDATED BY THE 1% ANNUAL BOUNDARY MAP (FLOOD INSURANCE RATE MAP) COMMUNITY PANEL NUMBER 48491C0510F, EFFECTIVE DATE DECEMBER 20, 2019, FOR WILLIAMSON COUNTY, TEXAS.
5. ALL RESPONSIBILITY FOR THE ADEQUACY OF THESE PLANS REMAINS WITH THE ENGINEER WHO PREPARED THEM. IN ACCEPTING THESE PLANS, THE CITY OF HUTTO MUST RELY UPON THE ADEQUACY OF THE WORK OF THE DESIGN ENGINEER.
6. THESE PLANS WERE PREPARED, SEALED, AND DATED BY A TEXAS LICENSED PROFESSIONAL ENGINEER. THEREFORE, BASED ON THE ENGINEER'S CONCURRENCE OF COMPLIANCE, THE PLANS FOR CONSTRUCTION OF THE PROPOSED PROJECT ARE HEREBY APPROVED SUBJECT TO THE STANDARD CONSTRUCTION SPECIFICATIONS AND DETAILS MANUAL AND ALL OTHER APPLICABLE CITY, STATE, AND FEDERAL REQUIREMENTS AND CODES.
7. THIS PERMIT IS SUBJECT TO ALL CITY STANDARD SPECIFICATIONS AND DETAILS IN EFFECT AT THE TIME OF SUBMITTAL OF THE PROJECT TO THE CITY.
8. ALL ELECTRONIC DISTRIBUTION LINES AND INDIVIDUAL SERVICE LINES SHALL BE INSTALLED UNDERGROUND. IF OVERHEAD LINES EXISTED PRIOR TO UNDERGROUND INSTALLATION, SUCH POLES, GUY WIRES, AND RELATED STRUCTURES SHALL BE REMOVED FOLLOWING CONSTRUCTION OF THE UNDERGROUND INFRASTRUCTURE.
9. ALL ELECTRIC AND COMMUNICATION INFRASTRUCTURE SHALL COMPLY WITH THE UDC.

LEGAL DESCRIPTION:

8.572 ACRES OF LAND IN ACCORDANCE WITH THE LIDELL WALKER PHASE 2B FINAL PLAT.

CONSTRUCTION PLANS FOR

LIDELL WALKER PHASE 2B

"PAVING, DRAINAGE, WATER & WASTEWATER IMPROVEMENTS"

HUTTO, TEXAS
PROJECT #CP-24-0019

JULY 2024

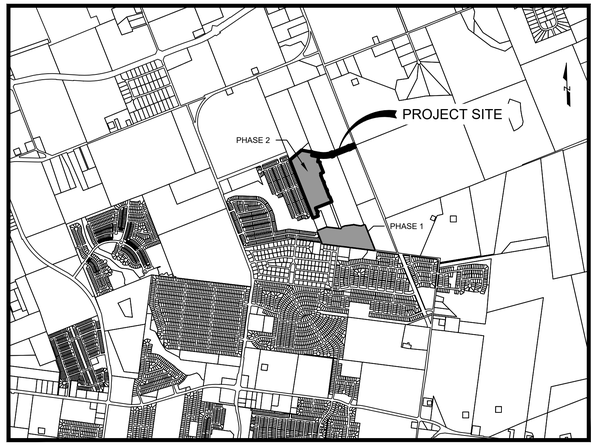

SCALE: 1" = 2500'

SHEET LIST TABLE

Sheet Number	Sheet Title
1	COVER SHEET
2	GENERAL NOTES (1 OF 2)
3	GENERAL NOTES (2 OF 2)
4	~~PRELIMINARY PLAT~~
5	EROSION CONTROL PLAN (1 OF 2)
6	EROSION CONTROL PLAN (2 OF 2)
7	GRADING PLAN (1 OF 2)
8	GRADING PLAN (2 OF 2)
9	MAIN HIPPO PLAN & PROFILE (1+00 TO 9+00)
10	MAIN HIPPO PLAN & PROFILE (9+00 TO END)
11	STREET B PLAN & PROFILE (1+00 TO END)
12	STREET D PLAN & PROFILE (1+00 TO END)
13	DRAINAGE AREA MAP (1 OF 2)
14	DRAINAGE AREA MAP (2 OF 2)
15	DRAINAGE AREA CALCULATIONS
16	OVERALL STORM SEWER PLAN (1 OF 2)
17	OVERALL STORM SEWER PLAN (2 OF 2)
18	SSL-M PLAN & PROFILE
19	SSL-P & SSL-W PLAN & PROFILE
20	SSL-Y & SSL-H & SD-HA PLAN & PROFILE
21	STORM SEWER LATERALS
22	CHANNEL-A PLAN & PROFILE (1+00 TO 9+00)
23	CHANNEL-A PLAN & PROFILE (9+00 TO END)
24	CULVERT B PLAN & PROFILE (1+00 TO END)
25	OVERALL WASTEWATER COLLECTION PLAN
26	WW-A PLAN & PROFILE (1+00 TO END)
27	WW-Z PLAN & PROFILE (1+00 TO END)
28	OVERALL WATER DISTRIBUTION PLAN
29	WL-A & WL-B PLAN & PROFILE (1+00 TO END)
30	WL-C PLAN & PROFILE (1+00 TO 7+50)
31	WL-C PLAN & PROFILE (7+50 TO END)
32	SIGNAGE AND STRIPING PLAN
33	EROSION CONTROL DETAILS (1 OF 2)
34	EROSION CONTROL DETAILS (2 OF 2)
35	STREET DETAILS (1 OF 2)
36	STREET DETAILS (2 OF 2)
37	STORM SEWER DETAILS (1 OF 5)
38	STORM SEWER DETAILS (2 OF 5)
39	STORM SEWER DETAILS (3 OF 5)
40	STORM SEWER DETAILS (4 OF 5)
41	STORM SEWER DETAILS (5 OF 5)
42	WASTEWATER DETAILS (1 OF 4)
43	WASTEWATER DETAILS (2 OF 4)
44	WASTEWATER DETAILS (3 OF 4)
45	WASTEWATER DETAILS (4 OF 4)
46	WATER DETAILS (1 OF 5)
47	WATER DETAILS (2 OF 5)
48	WATER DETAILS (3 OF 5)
49	WATER DETAILS (4 OF 5)
50	WATER DETAILS (5 OF 5)
51	TXDOT DETAILS (1 OF 2)
52	TXDOT DETAILS (2 OF 2)

Added Recorded Plat - 4 Sheets

Sidewalk Exhibit added
Ramp Exhibit added
Oncor Electric Plans added

REVIEWED BY:

Scott Pike — 8-7-24
JONAH WATER SPECIAL UTILITY DISTRICT — DATE

CITY OF HUTTO ENGINEERING — DATE

ALL RESPONSIBILITY FOR THE ADEQUACY OF THESE PLANS REMAINS WITH THE ENGINEER WHO PREPARED THEM. IN ACCEPTING THESE PLANS, THE CITY OF HUTTO MUST RELY UPON THE ADEQUACY OF THE WORK HERE IN SEALED BY THE DESIGN ENGINEER.

I, AUSTIN RAY SEIFERT, DO HEREBY CERTIFY THAT THE PUBLIC WORK AND DRAINAGE IMPROVEMENTS DESCRIBED HEREIN HAVE BEEN DESIGNED IN COMPLIANCE WITH THE SUBDIVISION AND BUILDING REGULATION ORDINANCES AND STORM WATER DRAINAGE POLICY ADOPTED BY THE CITY OF HUTTO, TEXAS.

SUBMITTED BY:

AUSTIN R. SEIFERT, P.E. #137175 — 7/29/2024
GRAY ENGINEERING INC. — DATE
8834 N. CAPITAL OF TEXAS HWY., SUITE 140
AUSTIN, TEXAS 78759
(512) 452-0371

STATE OF TEXAS · AUSTIN R. SEIFERT · 137175 · LICENSED PROFESSIONAL ENGINEER · 07/29/2024

RECORD DRAWINGS
This record drawing has been prepared based on information submitted, in part by others. While this information is believed to be reliable, the Engineer is not responsible for its accuracy or for errors or omissions which may have been incorporated in the document as a result. Those relying on this record document are advised to obtain independent verification of its accuracy before applying it for any purpose.

Signature — 2.16.26 Date

REVISIONS / CORRECTIONS

REVISION NO.	DESCRIPTION	DATE	REVISED (R), ADD (A), VOID((V), SHEET NO.'S	ACCEPTED BY	APPROVAL DATE
1	ADJUSTED SILT FENCE AND LIMITS OF CONSTRUCTION, ADDED TWO CHANNELS, ADDED STORM SEWER LINES SSL-H AND CHAN-H, EXTEND WWL-A, ADDED DETAILS	07/22/25	(R) 1, 5, 7, 13, 14, 15, 16, 20, 21, 25, 26, 41, 52		

FOR OFFICIAL USE ONLY — Reviewed for Substantial Conformance by City of Hutto — Matt Rector, P.E. City Engineer Engineering - City of Hutto — 09/26/2025

FOR OFFICIAL USE ONLY — Reviewed for Substantial Conformance by City of Hutto — Matt Rector, P.E. City Engineer Engineering - City of Hutto — 10/01/2024

GRAY ENGINEERING
8834 N. Capital of Texas Hwy.
Suite 140
Austin, Texas 78759
(512)452-0371
FAX(512)454-9933
TBPELS FIRM #2946

SHEET 1 OF 52

H:\PROJECTS\1725 - GRBK EDGEWOOD LLC\LIDELL WALKER PHASE 2B\CAD\SHEETS\11738-C-COVR.DWG DATE: 7/29/2024 9:13:02 AM BY: ASEIFERT

LIDELL WALKER PHASE 2B
PROJECT NO. 2157-ENG

CITY OF HUTTO - GENERAL CONSTRUCTION NOTES:
UPDATED MARCH 2019

1. THE CONTRACTOR IS TO CONTACT ONE OF THE FOLLOWING: TEXAS811 811 LONE STAR 1-800-669-8344 FOR LOCATION OF EXISTING FACILITIES AT LEAST 48 HOURS PRIOR TO COMMENCEMENT OF ANY CONSTRUCTION ACTIVITIES.
2. PRIOR TO ANY CONSTRUCTION, THE DESIGN ENGINEER SHALL CONVENE A PRECONSTRUCTION CONFERENCE BETWEEN THE CITY OF HUTTO, HIMSELF, THE CONTRACTOR, OTHER UTILITY COMPANIES, ANY AFFECTED PARTIES AND ANY OTHER ENTITY THE CITY OR ENGINEER MAY REQUIRE. IF CONSTRUCTION IS NOT STARTED ON THE SITE WITHIN 30 CALENDAR DAYS AFTER THE PRE-CONSTRUCTION CONFERENCE, THE ENGINEER SHALL CONVENE A NEW PRECONSTRUCTION CONFERENCE BETWEEN THE CITY OF HUTTO, HIMSELF, AND ALL THE ABOVE MENTIONED ENTITIES.
3. PRIOR TO ANY CHANGES TO THE CONSTRUCTION SITE, VIDEO OF THE SITE MUST BE TAKEN AND PROVIDED TO THE CITY BEFORE CONSTRUCTION COMMENCES.
4. ALL CONSTRUCTION OPERATIONS SHALL BE PERFORMED IN ACCORDANCE WITH CITY OF HUTTO ENGINEERING MANUAL AND STANDARD CONSTRUCTION SPECIFICATIONS AND DETAILS. IF CITY OF HUTTO ENGINEERING MANUAL UNAVAILABLE, OR NOT APPLICABLE, REFER TO TXDOT AND/OR CITY OF GEORGETOWN MANUAL, STANDARDS AND/OR SPECIFICATIONS.
5. ALL STORM SEWER BENDS AND WYES SHALL BE PREFABRICATED.
6. ALL STORM SEWER MAINS TO BE FIELD-TESTED FOR WATER TIGHTNESS NO SOONER THAN 30 DAYS AFTER TOTAL COMPLETION OF THE STORM SEWER LINES.
7. ALL STORM SEWER MAINS TO BE VIDEO TAPED BY CAMERA NO SOONER THAN 30 DAYS AFTER TOTAL COMPLETION OF THE STORM SEWER LINES. TWO DIGITAL COPIES SHALL BE SUPPLIED TO THE CITY BEFORE CLOSEOUT. ALL STORM SEWER CONDUITS WILL BE INSPECTED BY THE CITY BEFORE CITY ACCEPTANCE, VIDEO MUST SHOW DETAILS OF ALL IRREGULARITIES OR OFFSETS (MINIMUM 10 SECONDS OF VIDEO TIME).
8. ALL CONSTRUCTION OPERATIONS SHALL BE ACCOMPLISHED IN ACCORDANCE WITH APPLICABLE REGULATIONS OF THE U.S. OCCUPATIONAL SAFETY AND HEALTH ADMINISTRATION. OSHA STANDARDS MAY BE PURCHASED FROM THE GOVERNMENT PRINTING OFFICE; INFORMATION AND RELATED REFERENCE MATERIALS MAY BE PURCHASED FROM OSHA, 611 E. 6TH STREET, AUSTIN, TEXAS.
9. CONTRACTOR SHALL TAKE ALL DUE PRECAUTIONS TO PROTECT EXISTING FACILITIES FROM DAMAGE. ANY DAMAGE INCURRED TO EXISTING FACILITIES AS A RESULT OF CONSTRUCTION OPERATIONS TO BE REPAIRED IMMEDIATELY BY THE CONTRACTOR, AT NO ADDITIONAL COST TO OWNER.
10. CONTRACTOR TO GIVE NOTICE TO ALL AUTHORIZED INSPECTORS, SUPERINTENDENTS OR PERSONS IN CHARGE OF PUBLIC AND PRIVATE UTILITIES AFFECTED BY HIS OPERATIONS AT LEAST 48 HOURS PRIOR TO COMMENCEMENT OF WORK.
11. CONTRACTOR TO COMPLY WITH ALL APPLICABLE LOCAL, STATE, AND FEDERAL REQUIREMENTS REGARDING EXCESS AND WASTE MATERIAL, INCLUDING METHODS OF HANDLING AND DISPOSAL.
12. CONTRACTOR TO COORDINATE INTERRUPTIONS OF ALL UTILITIES AND SERVICES. ALL WORK TO BE IN ACCORDANCE WITH THE REQUIREMENTS OF THE APPLICABLE UTILITY COMPANY OR AGENCY INVOLVED.
13. WHEN UN-LOCATED OR INCORRECTLY LOCATED, A BREAK IN UTILITY LINES, OR OTHER UTILITIES AND SERVICES ARE ENCOUNTERED DURING SITE WORK OPERATIONS, CONTRACTOR SHALL NOTIFY THE APPLICABLE UTILITY COMPANY IMMEDIATELY TO OBTAIN PROCEDURE DIRECTIONS. CONTRACTOR SHALL COOPERATE WITH THE APPLICABLE UTILITY COMPANY IN MAINTAINING ACTIVE SERVICES IN OPERATION.
14. CONTRACTOR TO LOCATE, PROTECT, AND MAINTAIN BENCHMARKS, MONUMENTS, CONTROL POINTS AND PROJECT ENGINEERING REFERENCE POINTS. RE-ESTABLISH DISTURBED OR DESTROYED ITEMS BY REGISTERED PROFESSIONAL LAND SURVEYOR IN THE STATE OF TEXAS, AT NO ADDITIONAL COST TO OWNER.
15. WHEN CONSTRUCTION IS BEING CARRIED OUT WITHIN EASEMENTS, THE CONTRACTOR SHALL CONFINE HIS WORK TO WITHIN THE PERMANENT AND TEMPORARY EASEMENTS. PRIOR TO FINAL ACCEPTANCE, THE CONTRACTOR SHALL BE RESPONSIBLE FOR REMOVING ALL TRASH AND DEBRIS WITHIN THE PERMANENT AND TEMPORARY EASEMENTS. CLEAN-UP SHALL BE TO THE SATISFACTION OF THE ENGINEER.
16. THE CONTRACTOR AND THE ENGINEER SHALL KEEP ACCURATE RECORDS OF ALL CONSTRUCTION THAT DEVIATES FROM THE PLANS. ACCURATE "RECORD" DRAWINGS WILL BE PROVIDED TO THE CITY OF HUTTO, ALONG WITH A LETTER CERTIFICATION FROM A REGISTERED PROFESSIONAL ENGINEER LICENSED IN THE STATE OF TEXAS, STATING THAT SAID PROJECT HAS BEEN CONSTRUCTED IN ACCORDANCE WITH THESE PLANS, PRIOR TO THE OWNER BEING ISSUED A CERTIFICATION OF COMPLETION AND FINAL ACCEPTANCE. THESE "RECORD" DRAWINGS SHALL MEET WITH THE SATISFACTION OF THE ENGINEERING AND DEVELOPMENT SERVICES DEPARTMENTS PRIOR TO FINAL ACCEPTANCE.
17. CONTRACTOR SHALL STRIP SIX (6) INCHES OF TOPSOIL FROM ALL AREAS SUBJECT TO GRADE MODIFICATION. REMOVE ALL AREAS OF WEAK SOIL.
18. THE CONTRACTOR SHALL PROTECT ALL EXISTING FENCES. IN THE EVENT THAT A FENCE MUST BE REMOVED, THE CONTRACTOR SHALL REPLACE SAID FENCE OR PORTION THEREOF WITH THE SAME TYPE OF FENCING TO A QUALITY OF EQUAL OR BETTER THAN THE ORIGINAL FENCE.
19. UPON COMPLETION OF THE PROJECT, THE SITE(S) AS DEFINED HEREIN SHALL BE CLEANED OF ALL DEBRIS AND LEFT IN A NEAT AND PRESENTABLE CONDITION.
20. ALL ADJOINING PAVEMENT SECTIONS SHALL BE PROTECTED DURING ALL PHASES OF CONSTRUCTION AND ANY DAMAGES INCURRED DUE TO CONTRACTOR'S OPERATION SHALL BE REPAIRED AND/OR REPLACED AT THE CONTRACTOR'S EXPENSE.
21. CONTRACTOR TO CONTROL DUST CAUSED BY THE WORK AND COMPLY WITH POLLUTION CONTROL REGULATIONS OF GOVERNING AUTHORITIES (NO SEPARATE PAY).
22. TRAFFIC CONTROLS TO BE INSTALLED IN ACCORDANCE WITH THE CURRENT TXDOT MANUAL ON UNIFORM TRAFFIC CONTROL DEVICES AND TXDOT BARRICADE AND CONSTRUCTION STANDARDS.
23. REVEGETATE ALL DISTURBED AREAS UPON COMPLETION OF THE WORK PER CITY OF GEORGETOWN CONSTRUCTION STANDARDS.
24. CONTRACTOR TO EXERCISE CAUTION DURING CONSTRUCTION NEAR AND AROUND GAS LINES AND POWER LINES.
25. NO WORK IS TO BE PERFORMED BETWEEN THE HOURS OF 6:00 P.M. AND 7:00 A.M. ALL WORK REQUIRING CITY INSPECTION SHALL BE PERFORMED MONDAY THRU FRIDAY. THE CITY RESERVES THE RIGHT TO REQUIRE THE CONTRACTOR TO UNCOVER ALL WORK PERFORMED WITHOUT INSPECTION.
26. THE CONTRACTOR SHALL DETERMINE THE EXACT LOCATION VERTICALLY AND HORIZONTALLY OF ALL EXISTING UTILITIES PRIOR TO COMMENCING WORK, AND SHALL NOTIFY THE ENGINEER AND THE CITY IF THE EXISTING UTILITY LOCATION AND DEPTHS ARE DIFFERENT FROM WHAT IS SHOWN ON THE PLANS. THE CONTRACTOR AGREES TO BE FULLY RESPONSIBLE FOR ANY AND ALL DAMAGES WHICH MIGHT BE ASSOCIATED BY THE CONTRACTOR'S FAILURE TO EXACTLY LOCATE AND PRESERVE ANY AND ALL UNDERGROUND UTILITIES.
27. ALL FIRE LINES SHALL BE DUCTILE IRON.
28. DETECTABLE TAPE SHALL BE USED FOR ALL UNDERGROUND UTILITIES. TAPE MUST BE 12" WIDE 5 MIL WITH APPLICABLE COLOR AND LABEL.
29. CONTRACTOR WILL BE RESPONSIBLE FOR KEEPING ROADS AND DRIVES ADJACENT TO AND NEAR THE SITE FREE FROM SOIL, SEDIMENT AND DEBRIS. CONTRACTOR WILL NOT REMOVE SOIL, SEDIMENT OR DEBRIS FROM ANY AREA OR VEHICLE BY MEANS OF WATER, ONLY SHOVELING AND SWEEPING WILL BE ALLOWED. CONTRACTOR WILL BE RESPONSIBLE FOR DUST CONTROL FROM THE SITE.
30. THE CONTRACTOR SHALL BE RESPONSIBLE FOR ALL DAMAGE TO PRIVATE PROPERTY WHICH OCCURS AS A RESULT OF ANY PORTION OF THIS PROJECT. ANY DAMAGE TO PRIVATE PROPERTY SHALL BE REPAIRED TO EQUAL OR BETTER CONDITION. THE CONTRACTOR SHALL PAY AND/OR SETTLE WITH PRIVATE PROPERTY OWNER(S) FOR ALL COST RELATED TO DAMAGE. THE CITY WILL NOT PROVIDE

CITY OF HUTTO - EROSION, SEDIMENTATION AND TREE PROTECTION NOTES:
UPDATED NOVEMBER 2023

1. THE CONTRACTOR SHALL INSTALL AND MAINTAIN EROSION AND SEDIMENT CONTROLS AND TREE AND NATURAL AREA PROTECTIVE FENCING PRIOR TO ANY SITE PREPARATION WORK (CLEARING, GRUBBING, GRADING, OR EXCAVATION).
2. IF APPLICABLE, COMPLIANCE WITH THE TEXAS POLLUTANT DISCHARGE ELIMINATION SYSTEM (TPDES) CONSTRUCTION GENERAL PERMIT TXR150000 INCLUDING THE DEVELOPMENT AND IMPLEMENTATION OF A STORMWATER POLLUTION PREVENTION PLAN (SWP3) IS REQUIRED.
3. EROSION AND SEDIMENT CONTROLS SHALL BE INSTALLED IN ACCORDANCE WITH THE APPROVED EROSION AND SEDIMENT CONTROL PLAN. DEVIATIONS FROM THE APPROVED PLAN MUST BE SUBMITTED TO AND APPROVED BY THE OWNER'S REPRESENTATIVE.
4. FIELD REVISIONS TO THE EROSION AND SEDIMENT CONTROL PLAN MAY BE REQUIRED BY THE CITY INSPECTOR TO ADDRESS CONTROL INADEQUACIES. THESE REVISIONS SHALL BE DOCUMENTED IN THE SWP3, IF APPLICABLE.
5. COMPLIANCE WITH FEDERAL, STATE, AND LOCAL ENVIRONMENTAL REGULATIONS/REQUIREMENTS IS REQUIRED WHERE APPLICABLE.
6. STORMWATER BEST MANAGEMENT PRACTICES WILL BE REGULATED BY THE SWP3, AS APPROPRIATE.
7. THE CONTRACTOR SHALL INSPECT EROSION AND SEDIMENT CONTROLS AT: (A) WEEKLY INTERVALS OR (B) ONCE EVERY FOURTEEN (14) CALENDAR DAYS AND WITHIN 24 HOURS OF THE END OF A STORM EVENT OF > 0.5 INCHES TO ENSURE THEY ARE FUNCTIONING PROPERLY. ANY ACCUMULATED SEDIMENT AT CONTROLS MUST BE REMOVED WHEN THE DEPTH REACHED IS SIX INCHES (6").
8. ALL MUD, DIRT, ROCKS, DEBRIS, ETC., SPILLED, TRACKED, OR OTHERWISE DEPOSITED ON EXISTING PAVED STREETS, DRIVES AND AREAS USED BY THE PUBLIC SHALL BE CLEANED UP BY SCRAPING AND/OR SWEEPING BY THE END OF THE DAY. WASHING INTO DITCHES OR STORM SEWERS IS UNACCEPTABLE.
9. THE CONTRACTOR IS REQUIRED TO MAKE ANY REPAIRS OR MODIFICATIONS NECESSARY TO ENSURE CONTINUED EFFECTIVE OPERATION OF THE EROSION AND SEDIMENT CONTROLS.
10. IF EROSION AND SEDIMENT CONTROL SYSTEMS ARE EXISTING FROM PRIOR CONTRACTS, OWNER'S REPRESENTATIVE AND THE CONTRACTOR ARE TO EXAMINE THE EXISTING EROSION AND SEDIMENT CONTROLS FOR DAMAGE PRIOR TO CONSTRUCTION. ANY DAMAGE TO PREEXISTING EROSION AND SEDIMENT CONTROLS NOTED TO BE REPAIRED AT THE OWNER'S EXPENSE.

POLLUTION PREVENTION MEASURES:

1. NO ABOVE AND/OR BELOW GROUND TEMPORARY FUEL STORAGE FACILITIES ARE TO BE STORED ON THE PROJECT SITE.
2. INTENTIONAL RELEASE OF VEHICLE OR EQUIPMENT FLUIDS ONTO THE GROUND IS NOT ALLOWED. CONTAMINATED SOIL RESULTING FROM AN ACCIDENTAL SPILL HAS TO BE REMOVED AND DISPOSED OF PROPERLY.
3. ALL CONCRETE TRUCKS MUST USE AN APPROVED WASHOUT STATION.PAGE 2 OF 3

TREE PROTECTION:

1. EROSION AND SEDIMENT CONTROLS SHALL BE INSTALLED OR MAINTAINED IN A MANNER WHICH DOES NOT RESULT IN SOIL BUILDUP WITHIN TREE DRIP LINE.
2. WHERE A FENCE IS CLOSER THAN FOUR FEET (4') TO A TREE TRUNK, PROTECT THE TRUNK WITHSTRAPPED-ON PLANKING TO A HEIGHT OF EIGHT FEET (8'), OR THE LIMITS OF LOWER BRANCHING, IN ADDITION TO THE FENCING.
3. TREES SHALL BE REMOVED IN A MANNER WHICH DOES NOT IMPACT TREES TO BE PRESERVED.
4. ANY ROOT EXPOSED BY THE CONSTRUCTION ACTIVITY SHALL BE PRUNED FLUSH WITH THE SOIL. BACKFILL ROOT AREA WITH GOOD QUALITY TOPSOIL AS SOON AS POSSIBLE. IF EXPOSED ROOT AREAS ARE NOT BACKFILLED WITHIN TWO DAYS, COVER THEM WITH ORGANIC MATTER IN A MANNER WHICH REDUCES SOIL TEMPERATURE AND MINIMIZES WATER LOSS DUE TO EVAPORATION.
5. TO AVOID SOIL COMPACTION, THE CONTRACTOR SHALL NOT ALLOW VEHICULAR TRAFFIC, PARKING, OR STORAGE OF EQUIPMENT OR MATERIALS IN THE TREE DRIP LINE AREA.
6. CONTRACTOR SHALL PRUNE VEGETATION TO PROVIDE CLEARANCE FOR STRUCTURE, VEHICULAR TRAFFIC, AND EQUIPMENT BEFORE DAMAGE OCCURS (RIPPING OF BRANCHES, ETC.). ALL FINISHED PRUNING TO BE DONE ACCORDING TO RECOGNIZED, APPROVED STANDARDS OF THE INDUSTRY (REFERENCE THE "NATIONAL ARBORIST ASSOCIATION PRUNING STANDARDS FOR SHADE TREES").
7. WHERE THERE IS TO BE AN APPROVED GRADE CHANGE, IMPERMEABLE PAVING SURFACE, TREE WELL, OR OTHER SUCH SITE DEVELOPMENT IMMEDIATELY ADJACENT TO A PROTECTED TREE, ERECT THE FENCE APPROXIMATELY TWO TO FOUR FEET (2'-4') BEHIND THE AREA IN QUESTION.

PERMANENT EROSION CONTROLS :

1. ALL DISTURBED AREAS TO BE RESTORED AS NOTED BELOW.
2. ALL DISTURBED AREAS ARE TO BE PERMANENTLY STABILIZED AS REQUIRED BY THE TCEQ CGP TXR150000 OR BY LOCAL REQUIREMENTS, WHICHEVER IS MORE STRINGENT.
3. THE CONTRACTOR SHALL HYDROMULCH OR SOD ALL EXPOSED CUTS AND FILLS UPON COMPLETION OF CONSTRUCTION, EXCEPT WHERE CUTS ARE MADE OF SOLID ROCK.
4. SEEDING FOR PERMANENT EROSION CONTROL SHALL BE APPLIED OVER AREAS DISTURBED BY CONSTRUCTION AS FOLLOWS:
   4.a. FROM OCTOBER TO FEBRUARY, SEEDING SHALL BE WITH A COMBINATION OF ONE POUND (1 LB.) OF UNHULLED BERMUDA GRASS AND SEVEN POUNDS (7 LBS.) OF WINTER RYE PER 1,000 SQUARE FEET WITH A PURITY OF 95% WITH 90% GERMINATION.
   4.b. FROM MARCH TO SEPTEMBER, SEEDING SHALL BE DONE WITH THE ADDITION OF WINTER FESCUE (KENTUCKY 31) AT A RATE OF 100 LBS./ACRE. GRASS SHALL BE COMMON BERMUDA GRASS, HULLED, MINIMUM 82% PURE LIVE SEED.
5. ALL GRASS SEED SHALL BE FREE FROM NOXIOUS WEED, GRADE "A" RECENT CROP, CLEANED AND TREATED WITH APPROPRIATE FUNGICIDE AT TIME OF MIXING. SEED SHALL BE FURNISHED IN SEALED, STANDARD CONTAINERS WITH DEALER'S GUARANTEED ANALYSIS.
6. THE PLANTED AREA MUST BE IRRIGATED OR SPRINKLED IN A MANNER THAT WILL NOT ERODE THE TOPSOIL, BUT WILL SUFFICIENTLY SOAK THE SOIL TO A DEPTH OF SIX INCHES (6"). IRRIGATION WILL OCCUR PAGE 3 OF 3 AT 10-DAY INTERVALS DURING THE FIRST TWO MONTHS TO INSURE GERMINATION AND ESTABLISHMENT OF THE GRASS. RAINFALL OCCURRENCES OF HALF AN INCH (1/2") OR GREATER SHALL POSTPONE THE WATER SCHEDULE FOR ONE WEEK.
7. MULCH TYPE USED SHALL BE EITHER CELLULOSE FIBER MULCH APPLIED AT A RATE OF 2,000 POUNDS PER ACRE, OR WOOD FIBER MULCH APPLIED AT A RATE OF 2,500 POUNDS PER ACRE.
8. RESTORATION SHALL BE ACCEPTABLE WHEN THE GRASS HAS GROWN AT LEAST ONE INCH TO ONE AND A HALF INCHES (1" TO 1.5") HIGH WITH 95% COVERAGE, PROVIDED NO BARE SPOTS LARGER THAN TEN-SQUARE FEET EXIST.
9. A MINIMUM OF FOUR INCHES (4") OF TOPSOIL SHALL BE PLACED IN ALL AREAS DISTURBED BYCONSTRUCTION.
10. THE CONTRACTOR SHALL REMOVE ALL TEMPORARY EROSION AND SEDIMENT CONTROLS AT THE COMPLETION OF THE PROJECT AND WHEN VEGETATION HAS BEEN RESTORED

CITY OF HUTTO - WASTEWATER NOTES:
UPDATED AUGUST 2018

1. WASTEWATER SYSTEMS SHALL BE CONSTRUCTED IN ACCORDANCE WITH THE CITY OF HUTTO ENGINEERING DESIGN MANUAL, STANDARD SPECIFICATIONS AND STANDARD DETAILS.
2. NO CURVILINEAR WASTEWATER DESIGN/LAYOUT IS PERMITTED.
3. ALL WASTEWATER SERVICE, AND VALVE LOCATIONS SHALL BE APPROPRIATELY MARKED AS FOLLOWS:
   3.A. WASTEWATER SERVICE "S" ON TOP OF CURB
   3.B. VALVE "V" ON TOP OF CURB
4. TOOLS FOR MARKING CURBS SHALL BE PROVIDED BY THE CONTRACTOR. OTHER APPROPRIATE MEANS OF MARKING SERVICE AND VALVE LOCATIONS SHALL BE PROVIDED IN AREAS WITHOUT CURBS. SUCH MEANS OF MARKING SHALL BE SPECIFIED BY THE DESIGN ENGINEER AND APPROVED BY THE CITY OF HUTTO.
5. THRUST BLOCKING AND RESTRAINTS SHALL BE IN ACCORDANCE WITH CITY OF HUTTO STANDARD SPECIFICATIONS.
6. MANDREL TESTING WILL BE REQUIRED ON ALL WASTEWATER PIPE AS PER CITY OF HUTTO CONSTRUCTION SPECIFICATIONS.
7. ALL GRAVITY WASTEWATER MAINS TO BE FIELD-TESTED FOR WATER TIGHTNESS AND VIDEO TAPED BY CAMERA SO SOONER THAN 30-DAYS AFTER TOTAL COMPLETION OF WASTEWATER LINES. TWO DIGITAL COPIES SHALL BE PROVIDED TO THE CITY BEFORE CLOSEOUT.
8. HYDROSTATIC PRESSURE AND LEAKAGE TESTS SHALL BE PERFORMED ON ALL PRESSURE PIPELINES CARRYING WASTEWATER.
9. ALL MANHOLES SHALL BE TESTED FOR LEAKAGE SEPARATELY AND INDEPENDENTLY OF WASTEWATER LINES BY HYDROSTATIC EXFILTRATION TESTING OR OTHER CITY APPROVED METHOD PER CITY OF HUTTO CONSTRUCTION SPECIFICATIONS.
10. EXISTING MANHOLES SHALL BE TESTED FOR LEAKAGE PRIOR TO CORING OR ADJUSTMENT.
11. EXISTING MANHOLES SHALL HAVE ALL CONCRETE SURFACES CLEANED AND COATED PER CITY OF HUTTO WASTEWATER DETAILS AFTER CORING OR ADJUSTMENT.
12. ALL NEWLY INSTALLED PIPES AND RELATED PRODUCTS MUST CONFORM TO AMERICAN NATIONAL STANDARDS INSTITUTE / NATIONAL SANITATION FOUNDATION STANDARD 61 AND MUST BE CERTIFIED BY AN ORGANIZATION ACCREDITED BY ANSI.
13. PIPE MATERIAL FOR PRESSURE WASTEWATER MAINS SHALL BE PVC (AWWA C900, MIN. DR 14), OR DUCTILE IRON (AWWA C151, MIN. CLASS 350). DUCTILE IRON FOR PRESSURE WASTEWATER MAINS SHALL HAVE A CORROSION RESISTANT INTERIOR LINING ACCEPTABLE TO OWNER. PIPE MATERIAL FOR GRAVITY WASTEWATER MAINS SHALL BE PVC SDR-26, ASTM D-3034.
14. ALL PVC PIPE (ALL TYPES AND SDR/DR WALL THICKNESS TO BE USED) SHALL HAVE RUBBER GASKET EQUIPPED BELL AND SPIGOT JOINTS CONFORMING TO ASTM D-3212. THE GASKET MATERIAL SHALL CONFORM TO ASTM F-477. SOLVENT WELDED JOINTS WILL NOT BE APPROVED FOR THIS PROJECT.
15. ALL SANITARY SEWER FACILITIES AND POTABLE WATERLINES MUST BE INSTALLED SO AS TO PROVIDE A MINIMUM OF NINE FEET OF CLEARANCE IN ANY DIRECTION BETWEEN THEM. WHERE THE NINE FOOT SEPARATION DISTANCE CANNOT BE ACHIEVED, FOLLOW THESE SPECIAL PROCEDURES.
   15.A. IF A COLLECTION SYSTEM PIPE PARALLELS A PUBLIC WATER SUPPLY PIPE THE FOLLOWING REQUIREMENTS APPLY:
      15.A.1. A COLLECTION SYSTEM PIPE MUST BE CONSTRUCTED OF CAST IRON, DUCTILE IRON, OR PVC MEETING ASTM SPECIFICATIONS WITH AT LEAST 150 POUNDS PER SQUARE INCH (PSI) PRESSURE RATING FOR BOTH THE PIPE AND JOINTS.
      15.A.2. VERTICAL SEPARATION MUST BE AT LEAST TWO FEET BETWEEN THE OUTSIDE DIAMETERS OF THE PIPES.
      15.A.3. HORIZONTAL SEPARATION MUST BE AT LEAST FOUR FEET BETWEEN OUTSIDE DIAMETERS OF THE PIPES.
      15.A.4. COLLECTION SYSTEM PIPE MUST BE BELOW WATER SUPPLY PIPE.
   15.B. IF A COLLECTION SYSTEM PIPE CROSSES A PUBLIC WATER SUPPLY PIPE, THE FOLLOWING REQUIREMENTS APPLY:
      15.B.1. IF A COLLECTION SYSTEM IS CONSTRUCTED OF CAST IRON, DUCTILE IRON, OR PVC WITH A MINIMUM PRESSURE RATING OF 150 PSI, THE FOLLOWING REQUIREMENTS APPLY:
         15.B.1.a. A MINIMUM DISTANCE OF SIX (6) INCHES BETWEEN OUTSIDE DIAMETERS OF THE PIPES.
         15.B.1.b. A COLLECTION SYSTEM PIPE MUST BE BELOW A PUBLIC WATER SUPPLY PIPE.
         15.B.1.c. COLLECTION SYSTEM PIPE JOINTS MUST BE LOCATED AS FAR AS POSSIBLE FROM AN INTERSECTION WITH A PUBLIC WATER SUPPLY LINE.
      15.B.2. IF A COLLECTION SYSTEM CROSSES OVER A PUBLIC WATER SUPPLY PIPE, EACH PORTION OF A COLLECTION SYSTEM PIPE WITHIN NINE FEET OF A PUBLIC WATER SUPPLY PIPE MUST BE CONSTRUCTED OF CAST IRON, DUCTILE IRON, OR PVC PIPE WITH A PRESSURE RATING OF AT LEAST 150 PSI USING APPROPRIATE ADAPTERS.
16. AN INDEPENDENT QUALIFIED LAB, AT THE CONTRACTOR'S EXPENSE, SHALL PERFORM QUALITY TESTING FOR ALL WASTEWATER PIPE INSTALLED AND PRESSURE HYDROSTATIC TESTING OF ALL WATER LINES CONSTRUCTED. THE CONTRACTOR SHALL PROVIDE ALL EQUIPMENT (INCLUDING PUMPS AND GAGES), SUPPLIES, AND LABOR NECESSARY TO PERFORM THE TESTS. A CITY OF HUTTO CONSTRUCTION INSPECTOR MUST BE PRESENT FOR ALL TESTING.
17. THE CONTRACTOR SHALL PROVIDE THE DESIGN ENGINEER AND THE CITY NOT LESS THAN 24 HOURS NOTICE PRIOR TO PERFORMING STERILIZATION, QUALITY TESTING, OR PRESSURE TESTING.
18. THE CONTRACTOR SHALL NOT OPEN OR CLOSE ANY VALVES UNLESS AUTHORIZED BY THE CITY OF HUTTO.
19. ALL VALVE BOXES AND COVERS SHALL BE CAST IRON PER CITY OF HUTTO STANDARD DETAILS.
20. ALL MANHOLES SHALL BE CONCRETE WITH CAST IRON RING AND COVER. ALL MANHOLES LOCATED OUTSIDE OF PAVEMENT SHALL HAVE BOLTED AND GASKETED COVERS. CONCRETE MANHOLES TO BE COATED PER STANDARD DETAIL AND CONSTRUCTION SPECIFICATIONS. TAPPING OF FIBERGLASS MANHOLES SHALL NOT BE PERMITTED.
21. ALL WASTEWATER PIPING AND FITTINGS SHALL BE VIRGIN STOCK.
22. ALL MECHANICAL RESTRAINTS SHALL BE INSTALLED PER MANUFACTURER'S SPECIFICATIONS

8834 N. Capital of Texas Hwy.
Suite 140
Austin, Texas 78759
(512)452-0371
FAX(512)454-9933
TBPELS FIRM #2946
GRAY ENGINEERING

NO.	BY	DATE	REVISION DESCRIPTION
			RECORD ONLY

LIDELL WALKER PHASE 2B

GENERAL NOTES (1 OF 2)

PROJECT NO: 1725-11738
DESIGNED BY: ARS
DRAWN BY: ARS
CHECKED BY: TMH

NOTICE:
ALTERATION OF A SEALED DRAWING WITHOUT PROPER NOTIFICATION TO THE RESPONSIBLE ENGINEER IS A VIOLATION OF THE TEXAS ENGINEERING PRACTICE ACT.

FOR OFFICIAL USE ONLY
Reviewed for Substantial Conformance by City of Hutto
HUTTO
Matt Rector, P.E.
City Engineer
Engineering - City of Hutto
10/01/2024

STATE OF TEXAS
AUSTIN R. SEIFERT
137175
LICENSED PROFESSIONAL ENGINEER
07/29/2024

SHEET 2 OF 52

PROJECT NO: 2157-ENG LIDELL WALKER PHASE 2B

H:\PROJECTS\1725 - GRBK EDGEWOOD LLC\LIDELL WALKER PHASE 2B\CAD\SHEETS\11738-CS-NOTE.DWG DATE: 7/29/2024 9:13:09 AM BY: ASEIFERT

TCEQ WATER DISTRIBUTION SYSTEM GENERAL CONSTRUCTION NOTES:

1. THIS WATER DISTRIBUTION SYSTEM MUST BE CONSTRUCTED IN ACCORDANCE WITH THE CURRENT TEXAS COMMISSION ON ENVIRONMENTAL QUALITY (TCEQ) RULES AND REGULATIONS FOR PUBLIC WATER SYSTEMS 30 TEXAS ADMINISTRATIVE CODE (TAC) CHAPTER 290 SUBCHAPTER D. WHEN CONFLICTS ARE NOTED WITH LOCAL STANDARDS, THE MORE STRINGENT REQUIREMENT SHALL BE APPLIED. AT A MINIMUM, CONSTRUCTION FOR PUBLIC WATER SYSTEMS MUST ALWAYS MEET TCEQ'S "RULES AND REGULATIONS FOR PUBLIC WATER SYSTEMS."
2. ALL NEWLY INSTALLED PIPES AND RELATED PRODUCTS MUST CONFORM TO AMERICAN NATIONAL STANDARDS INSTITUTE (ANSI)/NSF INTERNATIONAL STANDARD 61 AND MUST BE CERTIFIED BY AN ORGANIZATION ACCREDITED BY ANSI [§290.44(A)(1)].
3. PLASTIC PIPE FOR USE IN PUBLIC WATER SYSTEMS MUST BEAR THE NSF INTERNATIONAL SEAL OF APPROVAL (NSF-PW) AND HAVE AN ASTM DESIGN PRESSURE RATING OF AT LEAST 150 PSI OR A STANDARD DIMENSION RATIO OF 26 OR LESS [§290.44(A)(2)].
4. NO PIPE WHICH HAS BEEN USED FOR ANY PURPOSE OTHER THAN THE CONVEYANCE OF DRINKING WATER SHALL BE ACCEPTED OR RELOCATED FOR USE IN ANY PUBLIC DRINKING WATER SUPPLY [§290.44(A)(3)].
5. ALL WATER LINE CROSSINGS OF WASTEWATER MAINS SHALL BE PERPENDICULAR [§290.44(E)(4)(B)].
6. WATER TRANSMISSION AND DISTRIBUTION LINES SHALL BE INSTALLED IN ACCORDANCE WITH THE MANUFACTURER'S INSTRUCTIONS. HOWEVER, THE TOP OF THE WATER LINE MUST BE LOCATED BELOW THE FROST LINE AND IN NO CASE SHALL THE TOP OF THE WATER LINE BE LESS THAN 24 INCHES BELOW GROUND SURFACE [§290.44(A)(4)].
7. THE MAXIMUM ALLOWABLE LEAD CONTENT OF PIPES, PIPE FITTINGS, PLUMBING FITTINGS, AND FIXTURES IS 0.25 PERCENT [§290.44(B)].
8. THE CONTRACTOR SHALL INSTALL APPROPRIATE AIR RELEASE DEVICES WITH VENT OPENINGS TO THE ATMOSPHERE COVERED WITH 16-MESH OR FINER, CORROSION RESISTANT SCREENING MATERIAL OR AN ACCEPTABLE EQUIVALENT [§290.44(D)(1)].
9. THE CONTRACTOR SHALL NOT PLACE THE PIPE IN WATER OR WHERE IT CAN BE FLOODED WITH WATER OR SEWAGE DURING ITS STORAGE OR INSTALLATION [§290.44(F)(1)].
10. WHEN WATERLINES ARE LAID UNDER ANY FLOWING OR INTERMITTENT STREAM OR SEMI-PERMANENT BODY OF WATER THE WATERLINE SHALL BE INSTALLED IN A SEPARATE WATERTIGHT PIPE ENCASEMENT. VALVES MUST BE PROVIDED ON EACH SIDE OF THE CROSSING WITH FACILITIES TO ALLOW THE UNDERWATER PORTION OF THE SYSTEM TO BE ISOLATED AND TESTED [§290.44(F)(2)].
11. PURSUANT TO 30 TAC §290.44(A)(5), THE HYDROSTATIC LEAKAGE RATE SHALL NOT EXCEED THE AMOUNT ALLOWED OR RECOMMENDED BY THE MOST CURRENT AWWA FORMULAS FOR PVC PIPE, CAST IRON AND DUCTILE IRON PIPE. INCLUDE THE FORMULAS IN THE NOTES ON THE PLANS. O THE HYDROSTATIC LEAKAGE RATE FOR POLYVINYL CHLORIDE (PVC) PIPE AND APPURTENANCES SHALL NOT EXCEED THE AMOUNT ALLOWED OR RECOMMENDED BY FORMULAS IN AMERICA WATER WORKS ASSOCIATION (AWWA) C-605 AS REQUIRED IN 30 TAC §290.44(A)(5). PLEASE ENSURE THAT

    THE FORMULA FOR THIS CALCULATION IS CORRECT AND MOST CURRENT FORMULA IS IN USE;
    Q= LD√P/148,000

    WHERE:
    Q = THE QUANTITY OF MAKEUP WATER IN GALLONS PER HOUR,
    L = THE LENGTH OF THE PIPE SECTION BEING TESTED, IN FEET,
    D= THE NOMINAL DIAMETER OF THE PIPE IN INCHES, AND
    P = THE AVERAGE TEST PRESSURE DURING THE HYDROSTATIC TEST IN POUNDS PER SQUARE INCH (PSI).

    THE HYDROSTATIC LEAKAGE RATE FOR DUCTILE IRON (DI) PIPE AND APPURTENANCES SHALL NOT EXCEED THE AMOUNT ALLOWED OR RECOMMENDED BY FORMULAS IN AMERICA WATER WORKS ASSOCIATION (AWWA) C-600 AS REQUIRED IN 30 TAC §290.44(A)(5). PLEASE ENSURE THAT THE FORMULA FOR THIS CALCULATION IS CORRECT AND MOST CURRENT FORMULA IS IN USE;
    L= SD√P/148,000
    WHERE:
    L = THE QUANTITY OF MAKEUP WATER IN GALLONS PER HOUR,
    S = THE LENGTH OF THE PIPE SECTION BEING TESTED, IN FEET,
    D = THE NOMINAL DIAMETER OF THE PIPE IN INCHES, AND
    P = THE AVERAGE TEST PRESSURE DURING THE HYDROSTATIC TEST IN POUNDS PER SQUARE INCH (PSI).
12. THE CONTRACTOR SHALL MAINTAIN A MINIMUM SEPARATION DISTANCE IN ALL DIRECTIONS OF NINE FEET BETWEEN THE PROPOSED WATERLINE AND WASTEWATER COLLECTION FACILITIES INCLUDING MANHOLES. IF THIS DISTANCE CANNOT BE MAINTAINED, THE CONTRACTOR MUST IMMEDIATELY NOTIFY THE PROJECT ENGINEER FOR FURTHER DIRECTION. SEPARATION DISTANCES, INSTALLATION METHODS, AND MATERIALS UTILIZED MUST MEET §290.44(E)(1)-(4).
13. THE SEPARATION DISTANCE FROM A POTABLE WATERLINE TO A WASTEWATER MAIN OR LATERAL MANHOLE OR CLEANOUT SHALL BE A MINIMUM OF NINE FEET. WHERE THE NINE-FOOT SEPARATION DISTANCE CANNOT BE ACHIEVED, THE POTABLE WATERLINE SHALL BE ENCASED IN A JOINT OF AT LEAST 150 PSI PRESSURE CLASS PIPE AT LEAST 18 FEET LONG AND TWO NOMINAL SIZES LARGER THAN THE NEW CONVEYANCE. THE SPACE AROUND THE CARRIER PIPE SHALL BE SUPPORTED AT FIVE-FOOT INTERVALS WITH SPACERS OR BE FILLED TO THE SPRINGLINE WITH WASHED SAND. THE ENCASEMENT PIPE SHALL BE CENTERED ON THE CROSSING AND BOTH ENDS SEALED WITH CEMENT GROUT OR MANUFACTURED SEALANT [§290.44(E)(5)].
14. FIRE HYDRANTS SHALL NOT BE INSTALLED WITHIN NINE FEET VERTICALLY OR HORIZONTALLY OF ANY WASTEWATER LINE, WASTEWATER LATERAL, OR WASTEWATER SERVICE LINE REGARDLESS OF CONSTRUCTION [§290.44(E)(6)].
15. SUCTION MAINS TO PUMPING EQUIPMENT SHALL NOT CROSS WASTEWATER MAINS, WASTEWATER LATERALS, OR WASTEWATER SERVICE LINES. RAW WATER SUPPLY LINES SHALL NOT BE INSTALLED WITHIN FIVE FEET OF ANY TILE OR CONCRETE WASTEWATER MAIN, WASTEWATER LATERAL, OR WASTEWATER SERVICE LINE [§290.44(E)(7)].
16. WATERLINES SHALL NOT BE INSTALLED CLOSER THAN TEN FEET TO SEPTIC TANK DRAINFIELDS [§290.44(E)(8)].
17. THE CONTRACTOR SHALL DISINFECT THE NEW WATERLINES IN ACCORDANCE WITH AWWA STANDARD C-651-14OR MOST RECENT, THEN FLUSH AND SAMPLE THE LINES BEFORE BEING PLACED INTO SERVICE. SAMPLES SHALL BE COLLECTED FOR MICROBIOLOGICAL ANALYSIS TO CHECK THE EFFECTIVENESS OF THE DISINFECTION PROCEDURE WHICH SHALL BE REPEATED IF CONTAMINATION PERSISTS. A MINIMUM OF ONE SAMPLE FOR EACH 1,000 FEET OF COMPLETED WATERLINE WILL BE REQUIRED OR AT THE NEXT AVAILABLE SAMPLING POINT BEYOND 1,000 FEET AS DESIGNATED BY THE DESIGN ENGINEER [§290.44(F)(3)].
18. DECHLORINATION OF DISINFECTING WATER SHALL BE IN STRICT ACCORDANCE WITH CURRENT AWWA STANDARD C655-09 OR MO

SEQUENCE OF CONSTRUCTION AND PRIORITY INSPECTIONS – SUBDIVISION DEVELOPMENT THE OWNER AND PRIMARY OPERATOR MUST FOLLOW THIS BASIC SEQUENCE OF CONSTRUCTION FOR EACH SUBDIVISION DEVELOPMENT. WITHIN THE FOLLOWING SEQUENCE OF CONSTRUCTION ARE LISTED PRIORITY INSPECTIONS THAT THE OWNER AND PRIMARY OPERATOR MUST REQUEST FROM A REPRESENTATIVE OF TRAVIS COUNTY'S STORM WATER MANAGEMENT PROGRAM INSPECTION TEAM. EACH PRIORITY INSPECTION MUST BE REQUESTED ON-LINE THROUGH THE MYPERMITNOW.ORG CUSTOMER PORTAL FOR TRAVIS COUNTY. THE PRIORITY INSPECTIONS IN THIS EXHIBIT ARE CONSISTENT WITH THE PRIORITY INSPECTIONS FOUND IN THE CUSTOMER PORTAL FOR THE PROJECT. FOR ASSURANCE PURPOSES, A SECOND REQUEST TO TRAVIS COUNTY IS STRONGLY ENCOURAGED BY ADDITIONALLY SENDING AN E-MAIL TO THE FOLLOWING ADDRESS: ENV-INSPECT@TRAVISCOUNTYTX.GOV. THE SEQUENCE FOR ITEMS 1-4 AND ITEMS 17-22 MUST NOT BE ALTERED, BUT THE SEQUENCE FOR ITEMS 5-16 MAY BE MODIFIED WITH THE WRITTEN APPROVAL OF THE COUNTY.

TYPICAL SEQUENCE OF CONSTRUCTION

1. HOLD PRE-CONSTRUCTION CONFERENCE.
2. NO CLEARING OR ROUGH GRADING MAY BE DONE UNTIL THE APPROVED EROSION AND SEDIMENTATION CONTROLS ARE IN PLACE.
3. INSTALL TEMPORARY EROSION AND SEDIMENTATION CONTROLS AND STABILIZATION CONSTRUCTION ENTRANCE, IF REQUIRED, IN THE APPROVED PLANS.
4. ROUGH GRADE STREETS.
5. INSTALL ALL UTILITIES IN RIGHT-OF-WAY.
6. RE-GRADE AND COMPACT SUBGRADE. MEET WITH INSPECTOR AND/DESIGN ENGINEER TO DETERMINE AREAS OF DIFFERING STREET SECTION THICKNESS OR SUBGRADE PREPARATION IF CALLED FOR IN THE GEOTECHNICAL REPORT.
7. INSURE ALL UNDERGROUND UTILITIES ARE IN PLACE INCLUDING SLEEVES FOR DRY UTILITIES AND INSTALL FIRST COURSE OF BASE.
8. INSTALL CURBS, RIP-RAP AND MISCELLANEOUS CONCRETE.
9. INSTALL SECOND COURSE OF BASE.
10. TEST ALL UTILITIES AND INSTALL UTILITY TIE-INS. ALL TESTING MUST BE COMPLETE PRIOR TO INSTALLING TIE-INS AND PRIOR TO PAVING.
11. LAY ASPHALT.
12. FINAL GRADE ANY DITCHES AND PARKWAYS.
13. REVEGETATE ALL DISTURBED AREAS. DISPOSE OF SPOIL IN AN APPROVED MANNER.
14. SCHEDULE A FINAL INSPECTION.
15. AFTER ACCEPTANCE OF CONSTRUCTION, TEMPORARY EROSION CONTROLS MAY BE REMOVED.

TRENCH SAFETY NOTES:

1. IN ACCORDANCE WITH THE LAWS OF THE STATE OF TEXAS AND THE U. S. OCCUPATIONAL SAFETY AND HEALTH ADMINISTRATION REGULATIONS, ALL TRENCHES OVER 5 FEET IN DEPTH IN EITHER HARD AND COMPACT OR SOFT AND UNSTABLE SOIL SHALL BE SLOPED, SHORED, SHEETED BRACED OR OTHERWISE SUPPORTED. FURTHERMORE, ALL TRENCHES LESS THAN 5 FEET IN DEPTH SHALL ALSO BE EFFECTIVELY PROTECTED WHEN HAZARDOUS GROUND MOVEMENT MAY BE EXPECTED. TRENCH SAFETY SYSTEMS TO BE UTILIZED FOR THIS PROJECT WILL BE PROVIDED BY THE CONTRACTOR.
2. IN ACCORDANCE WITH THE U. S. OCCUPATIONAL SAFETY AND HEALTH ADMINISTRATION REGULATIONS, WHEN PERSONS ARE IN TRENCHES 4-FEET DEEP OR MORE, ADEQUATE MEANS OF EXIT, SUCH AS A LADDER OR STEPS, MUST BE PROVIDED AND LOCATED SO AS TO REQUIRE NO MORE THAN 25 FEET OF LATERAL TRAVEL.
3. IF TRENCH SAFETY SYSTEM DETAILS WERE NOT PROVIDED IN THE PLANS BECAUSE TRENCHES WERE ANTICIPATED TO BE LESS THAN 5 FEEET IN DEPTH AND DURING CONSTRUCTION IT IS FOUND THAT TRENCHES ARE IN FACT 5 FEET OR MORE IN DEPTH OR TRENCHES LESS THAN 5 FEET IN DEPTH ARE IN AN AREA WHERE HAZARDOUS GROUND MOVEMENT IS EXPECTED, ALL CONSTRUCTION SHALL CEASE, THE TRENCHED AREA SHALL BE BARRICADED AND THE ENGINEER NOTIFIED IMMEDIATELY. CONSTRUCTION SHALL NOT RESUME UNTIL APPROPRIATE TRENCH SAFETY SYSTEM DETAILS, AS DESIGNED BY A PROFESSIONAL ENGINEER, ARE RETAINED AND COPIES SUBMITTED TO THE CITY OF HUTTO.

FIRE DEPARTMENT:

1. AN ALL WEATHER DRIVING SURFACE MUST BE INSTALLED IN LOCATIONS SHOWN ON THE SITE PLAN TO BE FIRE LANES, PRIOR TO ANY BUILDING CONSTRUCTION BEYOND THE FOUNDATION PHASE.
2. THE FOUR AND ONE HALF-INCH STEAMER OPENING MUST FACE THE DRIVEWAY OR STREET WITH THREE TO SIX FEET SET BACKS FROM THE CURB LINE(S). NO OBSTRUCTION IS ALLOWED WITHIN THREE (3) FEET OF ANY FIRE HYDRANT, AND THE FOUR AND ONE HALF OPENING MUST BE TOTALLY UNOBSTRUCTED FROM THE STREET/DRIVEWAY.
3. ALL PERVIOUS/DECORATIVE PAVEMENTS SHALL BE ENGINEERED AND INSTALLED FOR 75,000 LB. LIVE-VEHICLE LOADS. THE DISTRICT MUST APPROVE ANY PERVIOUS/DECORATIVE PAVING WITHIN 100 FT. OF ANY BUILDING.
4. COMMERCIAL DUMPSTERS AND CONTAINERS WITH AN INDIVIDUAL CAPACITY OF 1.5 CUBIC YARDS OR GREATER SHALL NOT BE STORED OR PLACED WITHIN TEN- (10) FT. OF OPENINGS, COMBUSTIBLE WALLS, OR COMBUSTIBLE EAVE LINES.
5. VERTICAL CLEARANCE REQUIRED FOR FIRE APPARATUS IS 13 FEET, 6 INCHES, FOR THE FULL 25 FEET WIDTH OF ALL ACCESS DRIVES AND FOR INTERNAL CIRCULATION. DEAD-END FIRE APPARATUS ACCESS ROADS IN EXCESS OF 150 FEET IN LENGTH SHALL BE PROVIDED WITH APPROVED PROVISIONS FOR THE TURNING AROUND OF FIRE APPARATUS.
6. FIRE LANES SHALL BE STENCILED "FIRE LANE-TOW AWAY ZONE" IN WHITE LETTERS THREE INCHES TALL, AT INTERVALS NOT TO EXCEEDING 35 CURBS ALONG THE FIRE LANES SHALL BE PAINTED RED IN AREAS AS INDICATED ON THE SITE PLAN. WHERE NO CURB AND GUTTER EXISTS, FIRE APPARATUS ACCESS ROADS SHALL BE MARKED WITH PERMANENT FIRE LANE- TOW AWAY ZONE SIGNS AT INTERVALS NOT EXCEEDING 50 FEET. SIGNS SHALL HAVE A MINIMUM DIMENSION OF 12 INCHES WIDE AND 18 INCHES HIGH AND HAVE RED LETTERS ON A WHITE REFLECTIVE BACKGROUND. SIGNS SHALL BE POSTED ON ONE SIDE OR BOTH SIDES OF THE FIRE APPARATUS ROAD AS REQUIRED BY LOCAL AMENDMENTS.

GENERAL NOTES:

1. UNLESS OTHERWISE LISTED HEREIN, ALL CONSTRUCTION SHALL BE IN ACCORDANCE WITH THE CITY OF GEORGETOWN STANDARD SPECIFICATIONS, WHICH ARE HEREBY REFERENCED FOR THIS CONSTRUCTION PLAN SET.
2. WHERE A STATE OR LOCAL MUNICIPAL STANDARD DETAIL DUPLICATES A DETAIL SHOWN IN THE PLANS, THE MORE STRINGENT DETAIL, AS DETERMINED BY THE REVIEWING AGENCY, SHALL APPLY.
3. ANY EXISTING UTILITIES, PAVEMENT, CURBS, SIDEWALKS, STRUCTURES, TREES, ETC., THAT ARE DAMAGED OR REMOVED SHALL BE REPAIRED OR REPLACED TO EXISTING OR BETTER CONDITION BY THE CONTRACTOR AT NO COST TO THE OWNER.

Lidell Walker Tract
Engineer's Job No.: 23101100.003

RECOMMENDATIONS - PAVEMENT THICKNESS SECTIONS

Street Classification	Subgrade Material	Hot Mix Asphaltic Concrete, in	Crushed Limestone Base, in	Lime Stabilized Subgrade, in
Residential Local	Subgrade PI greater than 20	2.0	9	8
Residential Collector	Subgrade PI greater than 20	2.0	14	8
Major Collector	Subgrade PI greater than 20	3.0	17	8
Minor Arterial	Subgrade PI greater than 20	6.0	21	10

Notes:

1. The surface clay must first be tested for sulfate reaction and a mix design should be completed to determine the proper lime content, lime type, mixing procedure and curing conditions required.
2. The concern has arisen that ground water may enter the utility trenches at this site causing detrimental settlement of the utility trench backfill. To address this concern, the wastewater utility trenches could be turned in to French drains. To achieve this, additional open-graded gravel, such as the gravel already being used for pipe bedding at this site, should be placed above the pipe bedding material to the elevation where ground water is encountered. This extra layer of gravel should be covered with a geotextile fabric to prevent material above the gravel from infiltrating the gravel layer. Then, the utility trench should be filled in compacted layers in accordance with the construction plans. The wastewater utility trench must then be allowed to daylight from its lowest point such that water does not accumulate in the utility trench. Additional gravel may be required in the utility trench depending upon the depth that ground water is entering the utility trench during construction. A line item for French drains should be included in construction bid documents.
3. The subgrade improvement should be extended 3 feet beyond the back of the curb line.
4. These pavement thickness designs are intended to transfer the load from the anticipated traffic conditions.
5. The responsibility of assigning street classification to the streets in this project is left to the civil engineer.
6. If pavement designs other than those listed above are desired, please contact MLA Geotechnical.

Reviewed for Substantial Conformance by City of Hutto
CITY OF HUTTO
Matt Reiter, P.E.
City Engineer
Engineering - City of Hutto
10/01/2024
FOR OFFICIAL USE ONLY

8834 N. Capital of Texas Hwy.
Suite 140
Austin, Texas 78759
(512)452-0371
FAX(512)454-9933
TBPELS FIRM #2946
GRAY ENGINEERING

NO.	BY	DATE	REVISION DESCRIPTION
			RECORD ONLY

LIDELL WALKER PHASE 2B

GENERAL NOTES (2 OF 2)

PROJECT NO: 1725-11738
DESIGNED BY: ARS
DRAWN BY: ARS
CHECKED BY: TMH

NOTICE:
ALTERATION OF A SEALED DRAWING WITHOUT PROPER NOTIFICATION TO THE RESPONSIBLE ENGINEER IS A VIOLATION OF THE TEXAS ENGINEERING PRACTICE ACT.

STATE OF TEXAS
AUSTIN R. SEIFERT
137175
LICENSED PROFESSIONAL ENGINEER
07/29/2024

SHEET 3 OF 52

LIDELL WALKER PHASE 2B
PROJECT NO: 2157-ENG

H:\PROJECTS\1725 - GRBK EDGEWOOD LLC\LIDELL WALKER PHASE 2B\CAD\SHEETS\11738-C-NOTE.DWG DATE: 7/29/2024 9:13:10 AM BY: ASEIFERT

Doc #2025006497

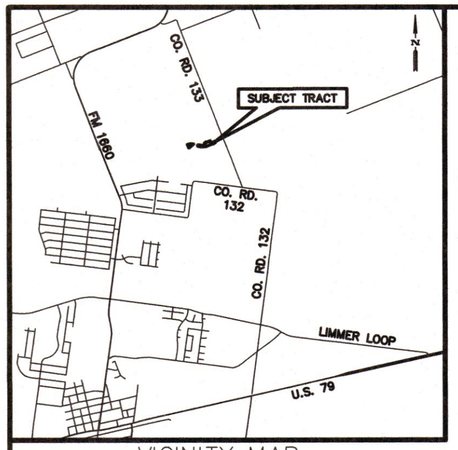

VICINITY MAP
NOT TO SCALE

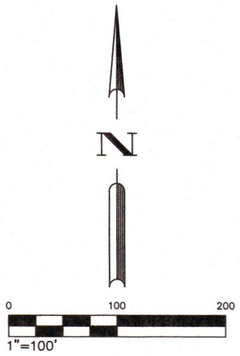

BEARING BASIS NOTE:

BEARING ORIENTATION IS BASED ON THE TEXAS STATE PLANE COORDINATE SYSTEM, CENTRAL ZONE 4203, NAD83. DISTANCES SHOWN HEREON ARE SURFACE VALUES
COMBINED SCALE FACTOR = 0.99988116

SUBMITTED DATE: NOVEMBER 22, 2024

OWNERS:

GRBK EDGEWOOD LLC
A TEXAS LIMITED LIABILITY COMPANY
5501 HEADQUARTERS DRIVE, SUITE 300W
PLANO, TEXAS 75024
TEL: (469) 573-6721

MERITAGE HOMES OF TEXAS, LLC
AN ARIZONA LIMITED LIABILITY COMPANY
12301 RESEARCH BLVD.
BUILDING 4 - 4TH FLOOR
AUSTIN, TEXAS 78759
TEL: (737) 309-5487

SURVEYOR:

BGE, INC.
101 W. LOUIS HENNA BLVD, STE 400
AUSTIN, TEXAS 78728
TEL: 512-879-0400

ENGINEER:

GRAY ENGINEERING, INC.
8834 N CAPITAL OF TEXAS HIGHWAY, SUITE 140
AUSTIN, TEXAS 78759
TEL: 512-452-0371

LEGEND

D.E.	DRAINAGE EASEMENT
DOC.	DOCUMENT
D.R.W.C.	DEED RECORDS OF WILLIAMSON COUNTY
ESMT.	EASEMENT
NO.	NUMBER
NOS.	NUMBERS
O.S.	OPEN SPACE
O.P.R.W.C.	OFFICIAL PUBLIC RECORDS OF WILLIAMSON COUNTY
O.R.W.C.	OFFICIAL RECORDS OF WILLIAMSON COUNTY
PG.	PAGE
P.O.B.	POINT OF BEGINNING
P.O.R.	POINT OF REFERENCE
R.O.W.	RIGHT-OF-WAY
VOL.	VOLUME
( )	RECORD INFORMATION DOC. NO. 202137021 O.P.R.W.C.
{ }	RECORD INFORMATION DOC. NO. 2009044814 O.P.R.W.C.
[ ]	RECORD INFORMATION DOC. NO. 2023089401 O.P.R.W.C.
< >	RECORD INFORMATION VOL. 866, PG. 661 D.R.W.C.
/ /	RECORD INFORMATION DOC. NO. 2024062745 O.P.R.W.C.
●	FOUND 1/2" IRON ROD
▲	FOUND MAG NAIL
○	SET 1/2" IRON ROD W/CAP STAMPED "BGE INC"
△	CALCULATED POINT

SHEET LEGEND

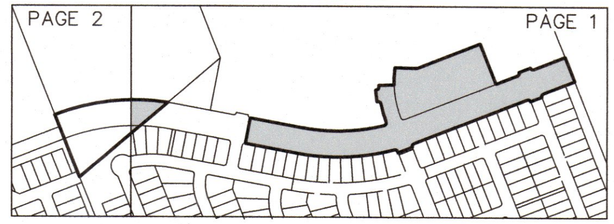

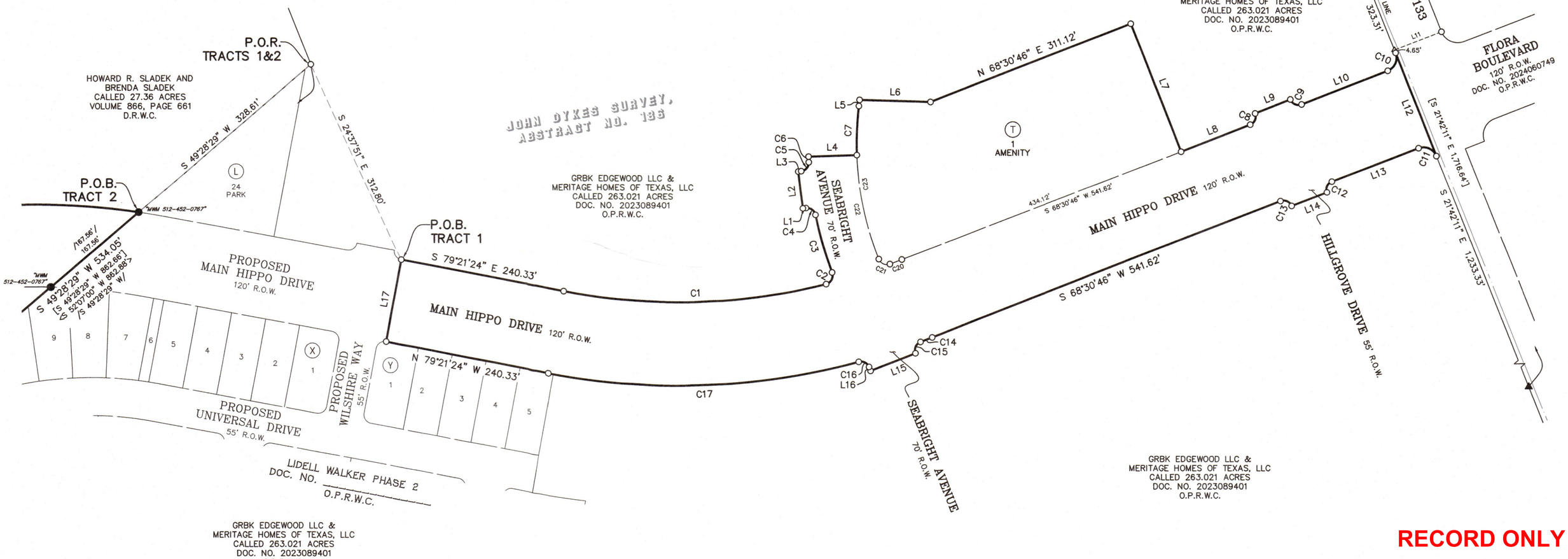

FINAL PLAT

LIDELL WALKER PHASE 2B

A SUBDIVISION OF 8.841 ACRES OF LAND LOCATED IN THE JOHN DYKES SURVEY, ABSTRACT NO. 186, WILLIAMSON COUNTY, TEXAS

RECORD ONLY

BGE, Inc.
101 West Louis Henna Blvd., Suite 400
Austin, Texas 78728
Tel: 512-879-0400 • www.bgeinc.com
TBPELS Registration No. F-1046
TBPELS Licensed Surveying Firm No. 10106502

\\bgeinc\data\TXC\Projects\Green_Brick_Partners\12802-01-Prairie-Winds_Ph-2B\SV\04_Finals\Drawings\Plat\12802-01_Lidell-Walker_Ph2B.dwg, 12/19/2024 11:22 AM, Matthew Misiak

Doc #2025006497

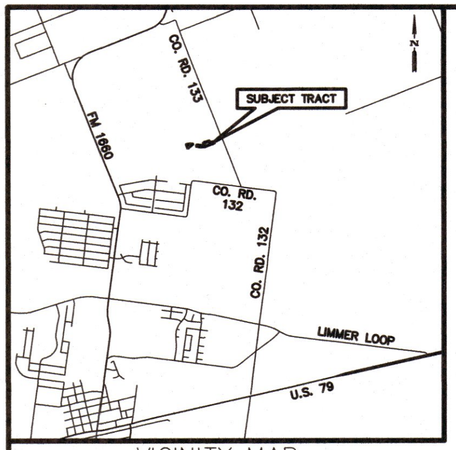

VICINITY MAP
NOT TO SCALE

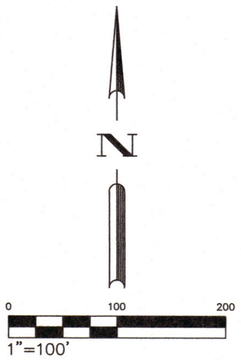

BEARING BASIS NOTE:

BEARING ORIENTATION IS BASED ON THE TEXAS STATE PLANE COORDINATE SYSTEM, CENTRAL ZONE 4203, NAD83. DISTANCES SHOWN HEREON ARE SURFACE VALUES
COMBINED SCALE FACTOR = 0.99988116

LINE TABLE		
NUMBER	BEARING	DISTANCE
L1	S 82°57'24" W	4.50'
L2	N 07°02'36" W	55.00'
L3	N 82°57'24" E	4.50'
L4	N 88°00'19" E	70.00'
L5	N 06°43'31" E	8.75'
L6	S 88°27'36" E	102.68'
L7	S 21°29'14" E	198.82'
L8	N 68°30'46" E	107.50'
L9	N 68°30'46" E	55.00'
L10	N 68°30'46" E	134.20'
L11	N 68°17'49" E	73.32'
L12	S 21°42'11" E	160.00'
L13	S 68°30'46" W	134.81'
L14	S 68°30'46" W	55.00'
L15	S 68°30'46" W	70.00'
L16	N 21°29'14" W	6.14'
L17	N 10°38'36" E	120.00'

LAND USE SCHEDULE		
DESCRIPTION	NO.	ACREAGE
AMENITY	1	2.119 AC.
OPEN SPACE	1	0.856 AC.
RIGHT-OF-WAY	–	5.866 AC.
TOTAL	2	8.841 AC.

SHEET LEGEND

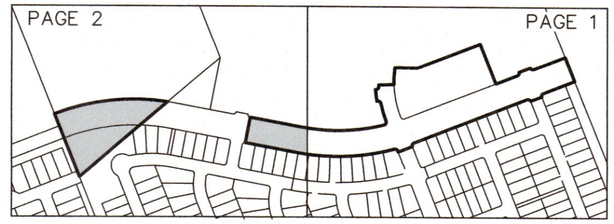

STREET NAMES		
STREET	R.O.W. WIDTH	CENTERLINE LENGTH
MAIN HIPPO DRIVE	120 FT.	1,994 FT.
SEABRIGHT AVENUE	70 FT.	314 FT.
HILLGROVE DRIVE	55 FT.	145 FT.
TOTAL LINEAR FEET	–	2,453 FT.

LOT AREA TABLE			
LOT	BLOCK	SQUARE FEET	TYPE
1	T	92,309	AMENITY

LOT AREA TABLE			
LOT	BLOCK	SQUARE FEET	TYPE
1	U	37,266	O.S.

CURVE TABLE					
NUMBER	ARC LENGTH	RADIUS	DELTA	CHORD BEARING	CHORD DISTANCE
C1	383.84'	890.00'	24°42'38"	N 88°17'17" E	380.87'
C2	21.06'	12.50'	96°32'28"	N 27°39'44" E	18.66'
C3	87.55'	535.00'	9°22'33"	N 15°55'13" W	87.45'
C4	18.72'	12.50'	85°48'39"	N 54°08'16" W	17.02'
C5	18.72'	12.50'	85°48'34"	N 40°03'07" E	17.02'
C6	8.01'	535.00'	0°51'29"	N 02°25'26" W	8.01'
C7	70.77'	465.00'	8°43'13"	N 02°21'55" E	70.70'
C8	19.63'	12.50'	90°00'00"	N 23°30'46" E	17.68'
C9	19.63'	12.50'	90°00'00"	S 66°29'14" E	17.68'
C10	31.49'	20.00'	90°12'57"	N 23°24'18" E	28.34'
C11	31.34'	20.00'	89°47'03"	N 66°35'42" W	28.23'
C12	19.63'	12.50'	90°00'00"	S 23°30'46" W	17.68'
C13	19.63'	12.50'	90°00'00"	N 66°29'14" W	17.68'
C14	18.16'	1,010.00'	1°01'49"	N 69°01'41" E	18.16'
C15	19.86'	12.50'	91°01'49"	S 24°01'41" W	17.84'
C16	18.25'	12.50'	83°38'00"	N 63°18'14" W	16.67'
C17	454.16'	1,010.00'	25°45'50"	N 87°45'41" E	450.34'
C18	529.92'	1,010.00'	30°03'41"	N 83°36'22" E	523.86'
C19	356.61'	890.00'	22°57'27"	S 80°05'10" W	354.23'
C20	18.65'	890.00'	1°12'01"	N 69°06'47" E	18.65'
C21	19.41'	12.50'	88°57'25"	S 65°48'30" E	17.52'
C22	156.92'	465.00'	19°20'06"	S 11°39'44" E	156.18'
C23	227.68'	465.00'	28°03'16"	S 07°18'05" E	225.42'

RECORD CURVE TABLE					
NUMBER	ARC LENGTH	RADIUS	DELTA	CHORD BEARING	CHORD DISTANCE
/C18/	/530.03'/	/1,010.00'/	/30°04'05"/	/N 83°36'10" E/	/523.97'/
/C19/	/356.70'/	/890.00'/	/22°57'48"/	/S 80°05'00" W/	/354.32'/

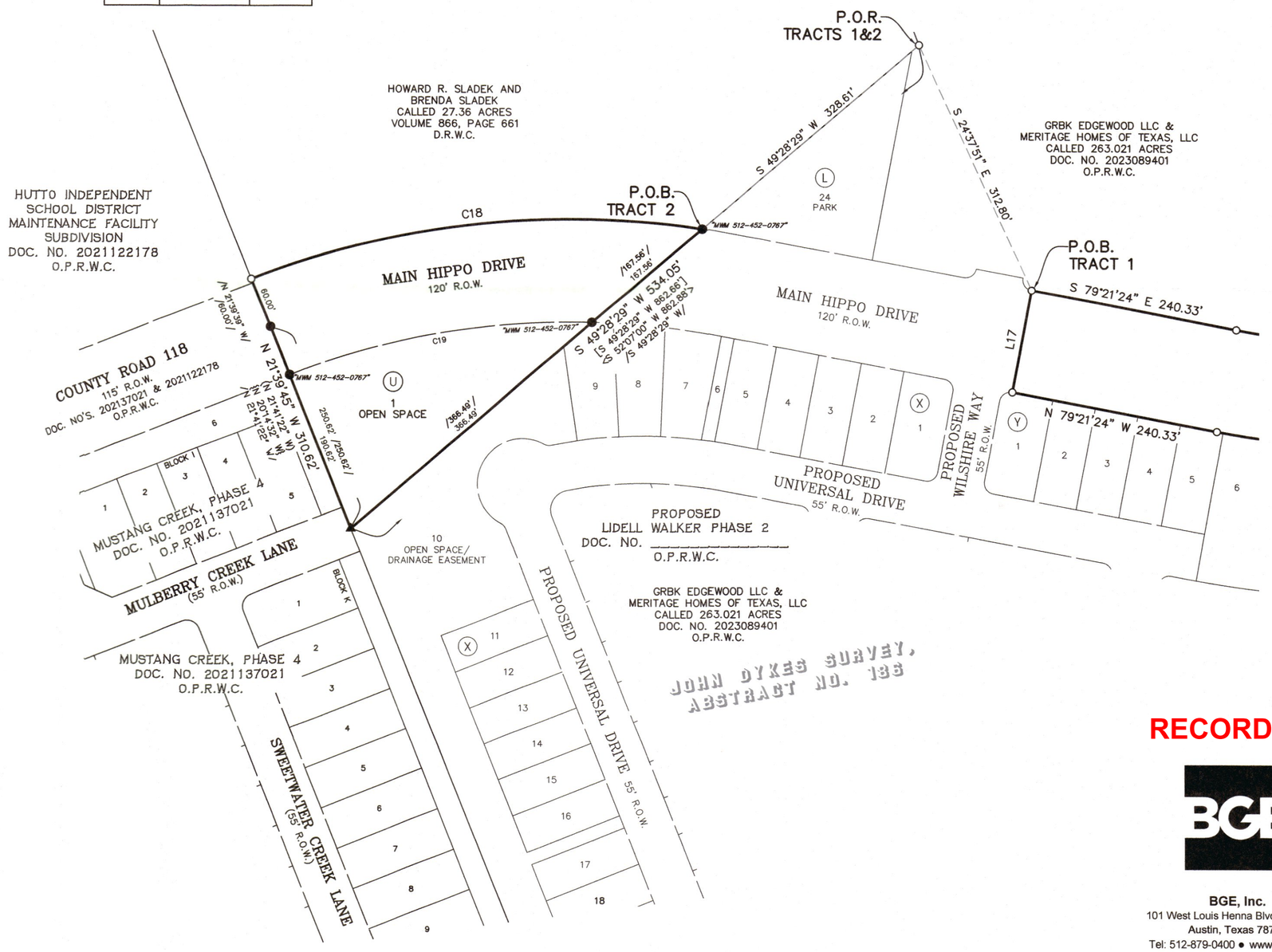

FINAL PLAT

LIDELL WALKER PHASE 2B

A SUBDIVISION OF 8.841 ACRES OF LAND LOCATED IN THE JOHN DYKES SURVEY, ABSTRACT NO. 186, WILLIAMSON COUNTY, TEXAS

RECORD ONLY

BGE, Inc.
101 West Louis Henna Blvd., Suite 400
Austin, Texas 78728
Tel: 512-879-0400 • www.bgeinc.com
TBPELS Registration No. F-1046
TBPELS Licensed Surveying Firm No. 10106502

\\bgeinc\data\TXC\Projects\Green_Brick_Partners\12802-01-Prairie-Winds_Ph-2B\SV\04_Finals\Drawings\Plat\12802-01_Lidell-Walker_Ph2B.dwg, 12/19/2024 11:22 AM, Matthew Mielok

DOC #20250006497

METES & BOUNDS DESCRIPTION

FIELD NOTES FOR A 8.841 ACRE TRACT OF LAND OUT OF THE JOHN DYKES SURVEY, ABSTRACT NO. 186, WILLIAMSON COUNTY, TEXAS; BEING A PORTION OF A CALLED 263.021 ACRE TRACT OF LAND AS TO CONVEYED TO GRBK EDGEWOOD LLC AND MERITAGE HOMES OF TEXAS, LLC BY SPECIAL WARRANTY DEED AS RECORDED IN DOCUMENT NUMBER 2023089401 OF THE OFFICIAL PUBLIC RECORDS OF WILLIAMSON COUNTY, TEXAS; AND ALL OF A CALLED 0.86 ACRE TRACT (TRACT I) AND A CALLED 1.22 ACRE TRACT (TRACT II) OF LAND AS TO CONVEYED TO GRBK EDGEWOOD LLC BY GENERAL WARRANTY DEED RECORDED IN DOCUMENT NUMBER 2024062745 OF THE OFFICIAL PUBLIC RECORDS OF WILLIAMSON COUNTY, TEXAS; SAID 8.841 ACRE TRACT OF LAND CONSISTING OF TWO TRACTS AND BEING MORE PARTICULARLY DESCRIBED BY METES AND BOUNDS IN TWO PARTS AS FOLLOWS:

TRACT 1:

COMMENCING for POINT OF REFERENCE at a 1/2–inch iron rod with cap stamped "BGE INC" set at the southeast corner of the remainder of a called 27.36 acre tract of land as conveyed to Howard R. Sladek and Brenda Sladek by warranty deed recorded in Volume 866, Page 661 of the Deed Records of Williamson County, Texas, at an interior corner of the above described 263.021–acre tract; Thence, over and across said 263.021–acre tract, S 24°37'51" E a distance of 312.80 feet to a 1/2–inch iron rod with cap stamped "BGE INC" set for the most westerly northwest corner and POINT OF BEGINNING of the herein described tract;

THENCE, continuing over and across said 263.021–acre tract, S 79°21'24" E a distance of 240.33 feet to a 1/2–inch iron rod with cap stamped "BGE INC" set at a point of curvature of a curve to the left;

THENCE, continuing over and across said 263.021–acre tract, along said curve to the left, an arc distance of 383.84 feet, having a radius of 890.00 feet, a central angle of 24°42'38" and chord which bears N 88°17'17" E a distance of 380.87 feet to a 1/2–inch iron rod with cap stamped "BGE INC" set at a point of compound curvature;

THENCE, continuing over and across said 263.021–acre tract, along said curve to the left, an arc distance of 21.06 feet, having a radius of 12.50 feet, a central angle of 96°32'28" and chord which bears N 27°39'44" E a distance of 18.66 feet to a 1/2–inch iron rod with cap stamped "BGE INC" set for a point of reverse curvature;

THENCE, continuing over and across said 263.021–acre tract, along said curve to the right, an arc distance of 87.55 feet, having a radius of 535.00 feet, a central angle of 9°22'33" and chord which bears N 15°55'13" W a distance of 87.45 feet to a 1/2–inch iron rod with cap stamped "BGE INC" set for a point of reverse curvature;

THENCE, continuing over and across said 263.021–acre tract, along said curve to the left, an arc distance of 18.72 feet, having a radius of 12.50 feet, a central angle of 85°48'39" and chord which bears N 54°08'16" W a distance of 17.02 feet to a 1/2–inch iron rod with cap stamped "BGE INC" set for a point of tangency;

THENCE, continuing over and across said 263.021–acre tract, S 82°57'24" W a distance of 4.50 feet to a 1/2–inch iron rod with cap stamped "BGE INC" set for an exterior corner of the herein described tract;

THENCE, continuing over and across said 263.021–acre tract, N 07°02'36" W a distance of 55.00 feet to a 1/2–inch iron rod with cap stamped "BGE INC" set for an exterior corner of the herein described tract;

THENCE, continuing over and across said 263.021–acre tract, N 82°57'24" E a distance of 4.50 feet to a 1/2–inch iron rod with cap stamped "BGE INC" set at an a point of curvature of a curve to the left;

THENCE, continuing over and across said 263.021–acre tract, along said curve to the left, an arc distance of 18.72 feet, having a radius of 12.50 feet, a central angle of 85°48'34" and chord which bears N 40°03'07" E a distance of 17.02 feet to a 1/2–inch iron rod with cap stamped "BGE INC" set for a point of reverse curvature;

THENCE, continuing over and across said 263.021–acre tract, along said curve to the right, an arc distance of 8.01 feet, having a radius of 535.00 feet, a central angle of 0°51'29" and chord which bears N 02°25'26" W a distance of 8.01 feet to a 1/2–inch iron rod with cap stamped "BGE INC" set for an exterior corner of the herein described tract;

THENCE, continuing over and across said 263.021–acre tract, N 88°00'19" E a distance of 70.00 feet to a 1/2–inch iron rod with cap stamped "BGE INC" set at an a point of curvature of a curve to the left;

THENCE, continuing over and across said 263.021–acre tract, along a curve to the right, an arc distance of 70.77 feet, having a radius of 465.00 feet, a central angle of 08°43'13" and chord which bears N 02°21'55" E a distance of 70.70 feet to a 1/2–inch iron rod with cap stamped "BGE INC" set at a point of tangency;

THENCE, continuing over and across said 263.021–acre tract, N 06°43'31" E a distance of 8.75 feet to a 1/2–inch iron rod with cap stamped "BGE INC" set for the most northerly west corner of the herein described tract;

THENCE, continuing over and across said 263.021–acre tract, S 88°27'36" E a distance of 102.68 feet to a 1/2–inch iron rod with cap stamped "BGE INC" set for an angle point;

THENCE, continuing over and across said 263.021–acre tract, N 68°30'46" E a distance of 311.12 feet to a 1/2–inch iron rod with cap stamped "BGE INC" set for the most northerly corner of the herein described tract;

THENCE, continuing over and across said 263.021–acre tract, S 21°29'14" E a distance of 198.82 feet to a 1/2–inch iron rod with cap stamped "BGE INC" set for an interior corner of the herein described tract;

THENCE, continuing over and across said 263.021–acre tract, N 68°30'46" E a distance of 107.50 feet to a 1/2–inch iron rod with cap stamped "BGE INC" set at a point of curvature of a curve to the left;

THENCE, continuing over and across said 263.021–acre tract, along said curve to the left, an arc distance of 19.63 feet, having a radius of 12.50 feet, a central angle of 90°00'00" and chord which bears N 23°30'46" E a distance of 17.68 feet to a 1/2–inch iron rod with cap stamped "BGE INC" set for an exterior corner of the herein described tract;

THENCE, continuing over and across said 263.021–acre tract, N 68°30'46" E a distance of 55.00 feet to a 1/2–inch iron rod with cap stamped "BGE INC" set for an exterior corner of the herein described tract at a point of curvature of a non–tangent curve to the left;

THENCE, continuing over and across said 263.021–acre tract, along a curve to the left, an arc distance of 19.63 feet, having a radius of 12.50 feet, a central angle of 90°00'00" and chord which bears S 66°29'14" E a distance of 17.68 feet to a 1/2–inch iron rod with cap stamped "BGE INC" set at a point of tangency;

THENCE, continuing over and across said 263.021–acre tract, N 68°30'46" E a distance of 134.20 feet to 1/2–inch iron rod with cap stamped "BGE INC" set at a point of curvature of a curve to the left;

THENCE, continuing over and across said 263.021–acre tract, along said curve to the left an arc distance of 31.49 feet, having a radius of 20.00 feet, a central angle of 90°12'57" and a chord which bears N 23°24'18" E a distance of 28.34 feet to 1/2–inch iron rod with cap stamped "BGE INC" set on the westerly right–of–way of County Road 133 (R.O.W varies) and the east line of said 263.021–acre tract, for a northeast corner of the herein described tract, from which a 1/2–inch iron rod with cap stamped "BGE INC" set on the westerly right–of–way of said County Road 133, at an angle point of said 263.021–acre tract bears N 21°42'11" W a distance of 323.31 feet;

THENCE, with the westerly right–of–way line of said County Road 133 and the east line of said 263.021–acre tract, S 21°42'11" E a distance of 160.00 feet to a 1/2–inch iron rod with cap stamped "BGE INC" set at a point of curvature of a non–tangent curve to the left, for the southeast corner of the herein described tract, from which a 60D nail found on the westerly right–of–way of said County Road 133, at an angle point of said 263.021–acre tract bears S 21°42'11" E a distance of 1,233.33 feet;

THENCE, departing the westerly right–of–way line of said County Road 133, over and across said 263.021–acre tract, along said curve to the left an arc distance of 31.34 feet, having a radius of 20.00 feet, a central angle of 89°47'03" and a chord which bears N 66°35'42" W a distance of 28.23 feet to a 1/2–inch iron rod with cap stamped "BGE INC" set at a point tangency;

THENCE, continuing over and across said 263.021–acre tract, S 68°30'46" W a distance of 134.81 feet to a 1/2–inch iron rod with cap stamped "BGE INC" set at a point of curvature of a curve to the left;

THENCE, continuing over and across said 263.021–acre tract, along said curve to the left, an arc distance of 19.63 feet, having a radius of 12.50 feet, a central angle of 90°00'00" and chord which bears S 23°30'46" W a distance of 17.68 feet to a 1/2–inch iron rod with cap stamped "BGE INC" set for an exterior corner of the herein described tract;

THENCE, continuing over and across said 263.021–acre tract, S 68°30'46" W a distance of 55.00 feet to a 1/2–inch iron rod with cap stamped "BGE INC" set for an exterior corner of the herein described tract at a point of curvature of a non–tangent curve to the left;

THENCE, continuing over and across said 263.021–acre tract, along said curve to the left, an arc distance of 19.63 feet, having a radius of 12.50 feet, a central angle of 90°00'00" and chord which bears N 66°29'14" W a distance of 17.68 feet to a 1/2–inch iron rod with cap stamped "BGE INC" set at a point of tangency;

THENCE, continuing over and across said 263.021–acre tract, S 68°30'46" W a distance of 541.62 feet to a 1/2–inch iron rod with cap stamped "BGE INC" set at a point of curvature of a curve to the right;

THENCE, continuing over and across said 263.021–acre tract, along said curve to the right, an arc distance of 18.16 feet, having a radius of 1,010.00 feet, a central angle of 01°01'49" and chord which bears S 69°01'41" W a distance of 18.16 feet to a 1/2–inch iron rod with cap stamped "BGE INC" set at a point of reverse curvature;

THENCE, continuing over and across said 263.021–acre tract, along said curve to the left, an arc distance of 19.86 feet, having a radius of 12.50 feet, a central angle of 91°01'49" and chord which bears S 24°01'41" W a distance of 17.84 feet to a 1/2–inch iron rod with cap stamped "BGE INC" set at a point of tangency;

THENCE, continuing over and across said 263.021–acre tract, S 68°30'46" W a distance of 70.00 feet to a 1/2–inch iron rod with cap stamped "BGE INC" set for an exterior corner of the herein described tract;

THENCE, continuing over and across said 263.021–acre tract, N 21°29'14" W a distance of 6.14 feet to a 1/2–inch iron rod with cap stamped "BGE INC" set at a point of curvature of a curve to the left;

THENCE, continuing over and across said 263.021–acre tract, along said curve to the left, an arc distance of 18.25 feet, having a radius of 12.50 feet, a central angle of 83°38'00" and chord which bears N 63°18'14" W a distance of 16.67 feet to a 1/2–inch iron rod with cap stamped "BGE INC" set at a point of reverse curvature;

THENCE, continuing over and across said 263.021–acre tract, along said curve to the right, an arc distance of 454.16 feet, having a radius of 1,010.00 feet, a central angle of 25°45'50" and chord which bears S 87°45'41" W a distance of 450.34 feet to a 1/2–inch iron rod with cap stamped "BGE INC" set at a point of tangency;

THENCE, continuing over and across said 263.021–acre tract, N 79°21'24" W a distance of 240.33 feet to a 1/2–inch iron rod with cap stamped "BGE INC" set for the southwest corner of the herein described tract;

THENCE, continuing over and across said 263.021–acre tract, N 10°38'36" E a distance of 120.00 feet to the POINT OF BEGINNING and containing 6.761 acres of land, more or less.

TRACT 2:

COMMENCING for POINT OF REFERENCE at a 1/2–inch iron rod with cap stamped "BGE INC" set at the southeast corner of the remainder of a called 27.36 acre tract of land as conveyed to Howard R. Sladek and Brenda Sladek by warranty deed recorded in Volume 866, Page 661 of the Deed Records of Williamson County, Texas, at an interior corner of the above described 263.021–acre tract; Thence; with the southeast line of said 27.36–acre tract and a northwest line of said 263.021–acre tract, S 49°28'29" W a distance of 328.61 feet to a 1/2–inch iron rod with cap stamped "MWM 512–452–0767" found at the northeast corner of the above described 1.22–acre tract (Tract II) for the northeast corner and POINT OF BEGINNING of the herein described tract;

THENCE, with the southeast line of said 1.22–acre tract (Tract II) and a northwest line of said 263.021–acre tract, S 49°28'29" W pass a 1/2–inch iron rod with cap stamped "MWM 512–452–0767" found at the common east corner of said 1.22–acre tract (Tract II) and the above described 0.86–acre tract (Tract I) and continuing on for a total distance of 534.05 feet to a mag nail found on the northwest line of Mustang Creek, Phase 4 a subdivision as recorded in Document Number 2021137021 of the Official Public Records of Williamson County, Texas, at the south corner of said 0.86–acre tract (Tract I) and a west corner of said 263.021–acre tract, for the south corner of the herein described tract;

THENCE, with the southwest lines of said 0.86–acre tract (Tract I) and 1.22–acre tract (Tract II) and the northwest lines of said Mustang Creek, Phase 4 and the Hutto Independent School District Maintenance Facility Subdivision as recorded in Document Number 2021122178 of the Official Public Records of Williamson County, Texas, N 21°39'45" W, pass a 1/2–inch iron rod with cap stamped "MWM 512–452–0767" found at the common west corner of said 0.86–acre tract (Tract I) and said 1.22–acre tract (Tract II), at the southeast terminus of County Road 118 (60' right–of–way) as dedicated by said Mustang Creek, Phase 4 subdivision at a distance of 190.62 feet, pass a 1/2–inch iron rod found at the northeast corner of said Mustang Creek, Phase 4, being the common east terminus that portion of said County Road 118 (60' right–of–way) and the portion of County Road 118 (55' right–of–way) as dedicated by said Hutto Independent School District Maintenance Facility Subdivision a distance of 250.62 feet, and continuing on for a total distance of 310.62 feet to a 1/2–inch iron rod with cap stamped "BGE INC" set at the northwest corner of said 1.22–acre tract (Tract II) being the southwest corner of said Sladek remainder tract, at a point of curvature of a non–tangent curve to the right, for the northwest corner of the herein described tract;

THENCE, with the north line of said 1.22–acre tract (Tract II) and the south line of said Sladek remainder tract, along said curve to the right on arc distance of 529.92 feet, having a radius of 1,010.00 feet, a central angle of 30°03'41" and chord which bears N 83°36'22" E, a distance of 523.86 feet to the POINT OF BEGINNING and containing 2.080 acres of land, more or less.

TRACT 1 AND TRACT 2 COMPRISING A TOTAL OF 8.841 ACRES OF LAND, MORE OR LESS.

FINAL PLAT

LIDELL WALKER PHASE 2B

A SUBDIVISION OF 8.841 ACRES OF LAND LOCATED IN THE JOHN DYKES SURVEY, ABSTRACT NO. 186, WILLIAMSON COUNTY, TEXAS

RECORD ONLY

BGE, Inc.
101 West Louis Henna Blvd., Suite 400
Austin, Texas 78728
Tel: 512-879-0400 • www.bgeinc.com
TBPELS Registration No. F-1046
TBPELS Licensed Surveying Firm No. 10106502

\\bgeinc\data\TXC\Projects\Green Brick Partners\12802-01-Prairie Winds Ph-2B\SVA04_Finals\Drawings\Plat\12802-01_Lidell-Walker_Ph2B.dwg, 12/19/2024 1:45 PM, Matthew Misiak

Doc #2025006497

STATE OF TEXAS §
COUNTY OF TRAVIS §

KNOW ALL MEN BY THESE PRESENTS:

THAT GRBK EDGEWOOD LLC, A TEXAS LIMITED LIABILITY COMPANY, ACTING HEREIN BY AND THROUGH AUSTIN EVETTS, IT'S AUTHORIZED SIGNER AND MERITAGE HOMES OF TEXAS, LLC, AN ARIZONA LIMITED LIABILITY COMPANY ACTING HEREIN BY AND THROUGH BRANDON HAMMANN, IT'S VICE PRESIDENT OF LAND DEVELOPMENT, OWNERS OF A CALLED 263.021 ACRE TRACT OF LAND AS CONVEYED TO THEM BY SPECIAL WARRANTY DEED RECORDED IN DOCUMENT NUMBER 2023089401 OF THE OFFICIAL PUBLIC RECORDS OF WILLIAMSON COUNTY, TEXAS; AND GRBK EDGEWOOD LLC, A TEXAS LIMITED LIABILITY COMPANY, BEING OWNER OF 2.08 ACRES OF LAND AS CONVEYED TO IT BY GENERAL WARRANTY DEED RECORDED IN DOCUMENT NUMBER 2024062745 OF THE OFFICIAL PUBLIC RECORDS OF WILLIAMSON COUNTY, TEXAS; DOES HEREBY SUBDIVIDE 8.841 ACRES OF LAND IN ACCORDANCE WITH THE PLAT SHOWN HEREON, TO BE KNOWN AS:

LIDELL WALKER PHASE 2B

AND DOES HEREBY DEDICATE TO THE PUBLIC THE USE OF THE STREETS AND EASEMENTS SHOWN HEREON, SUBJECT TO ANY EASEMENTS AND/OR RESTRICTIONS HERETOFORE GRANTED AND NOT RELEASED.

WITNESS MY HAND, THIS THE 19 DAY OF December, 2024, A.D.

AUSTIN EVETTS, AUTHORIZED SIGNER
GRBK EDGEWOOD LLC
5501 HEADQUARTERS DRIVE, SUITE 300W
PLANO, TEXAS 75024

STATE OF TEXAS §
COUNTY OF TRAVIS §

BEFORE ME, THE UNDERSIGNED AUTHORITY, PERSONALLY APPEARED AUSTIN EVETTS, KNOWN TO ME TO BE THE PERSON WHOSE NAME IS SUBSCRIBED TO THE FOREGOING INSTRUMENT AND ACKNOWLEDGED TO ME THAT HE EXECUTED THE SAME FOR THE PURPOSES AND CONSIDERATION THEREIN EXPRESSED AND IN THE CAPACITY THEREIN STATED.

NOTARY PUBLIC, STATE OF TEXAS

SAVANNAH AMBER SUPPAN
Notary ID #132523553
My Commission Expires
June 16, 2028

Savannah amber Suppan
PRINT NOTARY'S NAME
MY COMMISSION EXPIRES 06/16/2028

WITNESS MY HAND, THIS THE 19 DAY OF December, 2024 A.D.

BRANDON HAMMANN, VICE PRESIDENT OF LAND DEVELOPMENT
MERITAGE HOMES OF TEXAS, LLC
12301 RESEARCH BLVD.
BUILDING 4 – 4TH FLOOR
AUSTIN, TEXAS 78759

STATE OF TEXAS §
COUNTY OF TRAVIS §

BEFORE ME, THE UNDERSIGNED AUTHORITY, PERSONALLY APPEARED BRANDON HAMMANN, KNOWN TO ME TO BE THE PERSON WHOSE NAME IS SUBSCRIBED TO THE FOREGOING INSTRUMENT AND ACKNOWLEDGED TO ME THAT HE EXECUTED THE SAME FOR THE PURPOSES AND CONSIDERATION THEREIN EXPRESSED AND IN THE CAPACITY THEREIN STATED.

NOTARY PUBLIC, STATE OF TEXAS

SAVANNAH AMBER SUPPAN
Notary ID #132523553
My Commission Expires
June 16, 2028

Savannah amber Suppan
PRINT NOTARY'S NAME
MY COMMISSION EXPIRES 06/16/2028

FINAL PLAT

LIDELL WALKER PHASE 2B

A SUBDIVISION OF 8.841 ACRES OF LAND LOCATED IN THE JOHN DYKES SURVEY, ABSTRACT NO. 186, WILLIAMSON COUNTY, TEXAS

I, TIMOTHY M. HOLLAND, AM AUTHORIZED UNDER THE LAWS OF THE STATE OF TEXAS, TO PRACTICE THE PROFESSION OF ENGINEERING, AND DO HEREBY CERTIFY THAT THIS PLAT IS FEASIBLE FROM AN ENGINEERING STANDPOINT, AND IS TRUE AND CORRECT TO THE BEST OF MY KNOWLEDGE.

TIMOTHY M. HOLLAND, P.E.
LICENSED PROFESSIONAL ENGINEER NO. 94848
GRAY ENGINEERING, INC.
8834 N. CAPITAL OF TEXAS HIGHWAY, SUITE 140
AUSTIN, TX 78759

12/20/2024
DATE

STATE OF TEXAS
TIMOTHY M. HOLLAND
94848
LICENSED
PROFESSIONAL ENGINEER

I, JONATHAN O. NOBLES, AM AUTHORIZED UNDER THE LAWS OF THE STATE OF TEXAS, TO PRACTICE THE PROFESSION OF LAND SURVEYING, AND DO HEREBY CERTIFY THAT THIS PLAT IS TRUE AND CORRECT TO THE BEST OF MY KNOWLEDGE AND WAS PREPARED FROM AN ACTUAL ON THE GROUND SURVEY OF THE PROPERTY UNDER MY SUPERVISION ON APRIL 21, 2021.

JONATHAN O. NOBLES, R.P.L.S.
REGISTERED PROFESSIONAL LAND SURVEYOR NO. 5777
BGE, INC.
101 WEST LOUIS HENNA BLVD., SUITE 400
AUSTIN, TEXAS 78728

12/19/2024
DATE

STATE OF TEXAS
REGISTERED
JONATHAN O. NOBLES
5777
PROFESSIONAL
LAND SURVEYOR

GENERAL NOTES:

1. BEARING ORIENTATION IS BASED ON THE TEXAS STATE PLANE COORDINATE SYSTEM, CENTRAL ZONE 4203, NAD83.
2. NO BUILDING, FENCING, LANDSCAPING OR STRUCTURES ARE ALLOWED WITHIN ANY DRAINAGE OR WASTEWATER EASEMENT UNLESS EXPRESSLY PERMITTED BY THE CITY OF HUTTO.
3. BUILDING SETBACKS SHALL CONFORM TO UDC REQUIREMENTS, AS AMENDED.
4. A TEN (10) FOOT PUBLIC UTILITY EASEMENT (PUE) IS HEREBY DEDICATED ALONG AND ADJACENT TO ALL STREET SIDE PROPERTY LINES.
5. A THREE (3) FOOT PUBLIC UTILITY EASEMENT (PUE) IS HEREBY DEDICATED ON EACH SIDE OF ALL INTERIOR SIDE LOT LINES.
6. IF PARKING IS DESIRED ON BOTH SIDES OF THE STREET THEN THE STREETS MUST BE A MINIMUM OF 33 FEET WIDE. IF THE STREETS ARE LESS THAN 33 FEET IN WIDTH FIRE LANE SIGNAGE IS REQUIRED. (2018 IFC APPENDIX D SEC. 103.6 – D103.6.2)
7. NO LOT IN THIS SUBDIVISION SHALL BE OCCUPIED UNTIL CONNECTION IS MADE TO PUBLIC WATER AND WASTEWATER UTILITIES.
8. SIDEWALKS AND TREES SHALL BE PROVIDED ON BOTH SIDES OF ALL STREETS WITHIN THIS SUBDIVISION.
9. SIDEWALKS AND TREES SHALL BE PROVIDED ALONG ALL STREETS BOUNDING THIS SUBDIVISION.
10. ALL FENCING THAT IS NOT ON A PRIVATE LOT TO BE MAINTAINED BY THE HOME OWNERS ASSOCIATION.
11. STREET LIGHTING SHALL BE PROVIDED BY THE DEVELOPER IN CONFORMANCE WITH THE UDC REQUIREMENTS, AS AMENDED.
12. THIS TRACT IS WITHIN WATER CCN SERVICE AREA 10970. WATER AND WASTEWATER WILL BE AVAILABLE THROUGH THE CITY OF HUTTO AFTER THE APPROPRIATE WATER AND WASTEWATER SYSTEMS ARE INSTALLED TO THIS SITE. THE CITY OF HUTTO ASSUMES NO OBLIGATIONS FOR INSTALLING ANY WATER AND WASTEWATER IMPROVEMENTS REQUIRED TO SERVE THIS SITE.
13. NO PORTION OF THIS TRACT IS ENCROACHED BY THE ULTIMATE 1% ANNUAL CHANCE FLOODPLAIN.
14. NO PORTION OF THIS TRACT IS ENCROACHED BY ANY SPECIAL FLOOD HAZARD AREAS INUNDATED BY THE 1% ANNUAL CHANCE FLOODPLAIN AS IDENTIFIED BY THE U.S. FEDERAL EMERGENCY MANAGEMENT AGENCY BOUNDARY MAP (FLOOD INSURANCE RATE MAP) COMMUNITY PANEL NUMBER 48491C0510F, EFFECTIVE DATE DECEMBER 20, 2019, FOR WILLIAMSON COUNTY, TEXAS.
15. IN ORDER TO PROMOTE DRAINAGE AWAY FROM A STRUCTURE, THE SLAB ELEVATIONS SHALL BE BUILT AT LEAST ONE (1) FOOT ABOVE THE SURROUNDING GROUND AND SHOULD BE GRADED AWAY FROM THE STRUCTURE AT A SLOPE OF ½" PER FOOT FOR A DISTANCE OF AT LEAST TEN (10) FEET.
16. ALL SUBDIVISION CONSTRUCTION SHALL CONFORM TO THE CITY OF HUTTO UNIFIED DEVELOPMENT CODE AS AMENDED, CONSTRUCTION STANDARDS, AND GENERALLY ACCEPTED ENGINEERING PRACTICES.
17. ON-SITE STORMWATER DETENTION FACILITIES WILL BE PROVIDED TO REDUCE POST-DEVELOPMENT PEAK RATES OF DISCHARGE OF THE 2, 10, 25 AND 100-YEAR STORM EVENTS, IF NECESSARY.
18. ALL EASEMENTS ON PRIVATE PROPERTY SHALL BE MAINTAINED BY THE PROPERTY OWNER OR HIS OR HER ASSIGNS.
19. ALL DRAINAGE LOTS SHALL BE OWNED AND MAINTAINED BY THE HOMEOWNER'S ASSOCIATION.
20. THIS SUBDIVISION IS ZONED SF-1 VILLAGE.
21. ALL LOTS IN THIS SUBDIVISION ARE RESTRICTED TO SINGLE FAMILY RESIDENTIAL USE, UNLESS OTHERWISE INDICATED.
22. THE MAXIMUM IMPERVIOUS COVERAGE PER RESIDENTIAL LOT IS 57%.
23. SUBDIVISION WALLS SHALL BE LOCATED AND CONSTRUCTED IN ACCORDANCE WITH CHAPTER 4 OF THE UDC, AS AMENDED.
24. STREETS 26 FEET WIDE TO LESS THAN 32 FEET WIDE REQUIRE FIRE LANE STRIPING ON ONE SIDE OF THE STREET.
25. TRAFFIC IMPACT FEES WILL BE DUE BASED ON RESOLUTION R-2021-147A.
26. A SECOND POINT OF ACCESS, MEETING ALL CRITERIA OF THE MOST RECENTLY ADOPTED FIRE CODE, AS AMENDED, SHALL BE REQUIRED ON ALL PLATS OF RESIDENTIAL SUBDIVISIONS CONTAINING MORE THAN 29 DWELLING UNITS.

CITY DEVELOPMENT SERVICES SIGNATURES:

THIS SUBDIVISION IS LOCATED WITHIN THE CITY LIMITS OF HUTTO, THIS THE 10 DAY OF January, 2025.

ASHLEY BAILEY, DEVELOPMENT SERVICES DIRECTOR

1-10-25
DATE

THIS PLAT WAS APPROVED FOR RECORDING BY THE HUTTO PLANNING AND ZONING COMMISSION ON THE ON THE 3 DAY OF December, 2024.

~~SUSANNA BOYER~~, CHAIR
RICHARD J. HUDSON

1-7-25
DATE

STATE OF TEXAS §
§ KNOW ALL MEN BY THESE PRESENTS:
COUNTY OF WILLIAMSON §

THAT I, NANCY E. RISTER, CLERK OF THE COUNTY COURT OF SAID COUNTY, DO HEREBY CERTIFY THAT THE FOREGOING INSTRUMENT IN WRITING, WITH ITS CERTIFICATION OF AUTHENTICATION, WAS FILED FOR RECORD IN MY OFFICE ON THE 29th DAY OF January, 2025 A.D., AT 8:15 O'CLOCK A.M. AND DULY RECORDED ON THE 30th DAY OF January, 2025 A.D., AT 8:46 O'CLOCK A.M. IN THE PLAT RECORDS OF SAID COUNTY, IN DOCUMENT NO. 2025006497.

WITNESS MY HAND AND SEAL OF THE COUNTY COURT OF SAID COUNTY, AT MY OFFICE IN GEORGETOWN, TEXAS, THE DATE LAST ABOVE WRITTEN.

NANCY E. RISTER, CLERK, COUNTY COURT
WILLIAMSON COUNTY, TEXAS

BY: _____, Deputy
DEPUTY

COUNTY COURT
WILLIAMSON COUNTY TEXAS

RECORD ONLY

BGE, Inc.
101 West Louis Henna Blvd., Suite 400
Austin, Texas 78728
Tel: 512-879-0400 • www.bgeinc.com
TBPELS Registration No. F-1046
TBPELS Licensed Surveying Firm No. 10106502

\\bgeinc\data\TXC\Projects\Green_Brick_Partners\12802-01-Prairie_Winds_Ph-2B\SVA\04_Finals\Drawings\Plat\12802-01_Lidell-Walker_Ph2B.dwg, 12/19/2024 11:22 AM, Matthew Misiolek

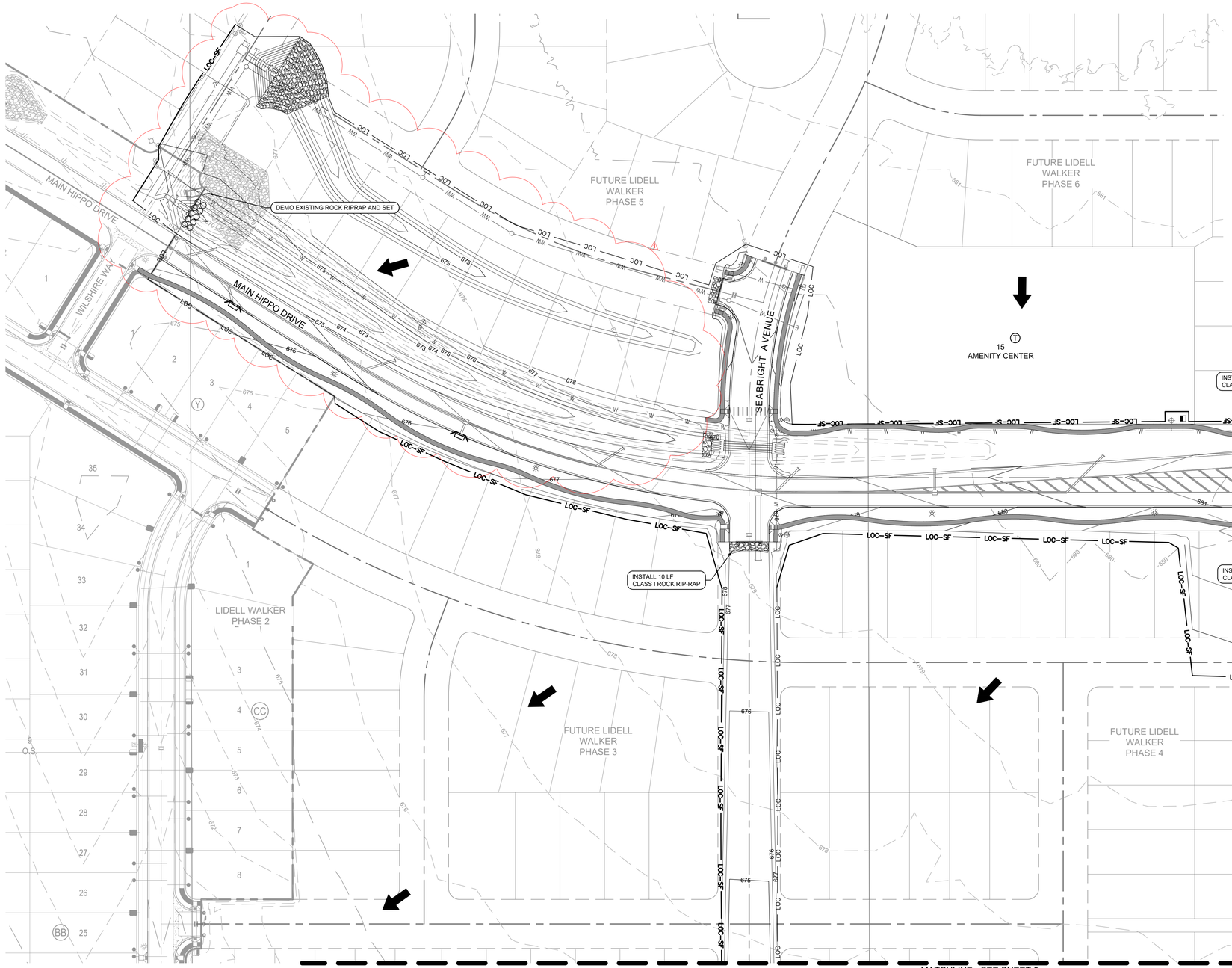

LEGEND

	PROPERTY BOUNDARY
XXX	EXISTING MAJOR CONTOUR
XXX	EXISTING MINOR CONTOUR
XXX	PROPOSED MAJOR CONTOUR
XXX	PROPOSED MINOR CONTOUR
LOC	LIMITS OF CONSTRUCTION
SF	SILT FENCE
LOC–SF	LIMITS OF CONSTRUCTION & SILT FENCE
	STABILIZED CONSTRUCTION ENTRANCE
	INLET PROTECTION
	TEMPORARY ROCK BERM
	CONTRACTOR STAGING AREA
	CONCRETE WASHOUT PIT
	PROPOSED STORM SEWER LINE
	PROPOSED INLET
SD	EXISTING STORM SEWER LINE
	EXISTING INLET
	SILT FENCE J-HOOKS
	FLOW ARROW

*TOTAL LAND DISTURBANCE = 11.25 ACRES

SCALE: 1" = 60'
GRAPHIC SCALE IN FEET
0 30' 60' 120'

8834 N. Capital of Texas Hwy.
Suite 140
Austin, Texas 78759
(512)452-0371
FAX(512)454-9933
TBPELS FIRM #2946
GRAY ENGINEERING

NO.	BY	DATE	REVISION DESCRIPTION
1		07/22/25	UPDATED GRADING, SILT FENCE AND LIMITS OF CONSTRUCTION

RECORD ONLY

LIDELL WALKER PHASE 2B

EROSION CONTROL PLAN (1 OF 2)

PROJECT NO: 1725-11738
DESIGNED BY: ARS
DRAWN BY: ARS
CHECKED BY: TMH

NOTICE:
ALTERATION OF A SEALED DRAWING WITHOUT PROPER NOTIFICATION TO THE RESPONSIBLE ENGINEER IS A VIOLATION OF THE TEXAS ENGINEERING PRACTICE ACT.

Reviewed for Substantial Conformance by City of Hutto
Matt Bailey, P.E.
City Engineer
Engineering - City of Hutto
09/05/2025

STATE OF TEXAS
AUSTIN R. SEIFERT
137175
LICENSED PROFESSIONAL ENGINEER
08/25/2025

SHEET 5 OF 52

LIDELL WALKER PHASE 2B
PROJECT NO: 2157-ENG

H:\PROJECTS\1725 - GRBK EDGEWOOD LLC\LIDELL WALKER PHASE 2B\CAD\SHEETS\11738-C-EROS.DWG DATE: 8/25/2025 4:25:30 PM BY: ASEIFERT

MATCHLINE - SEE SHEET 5

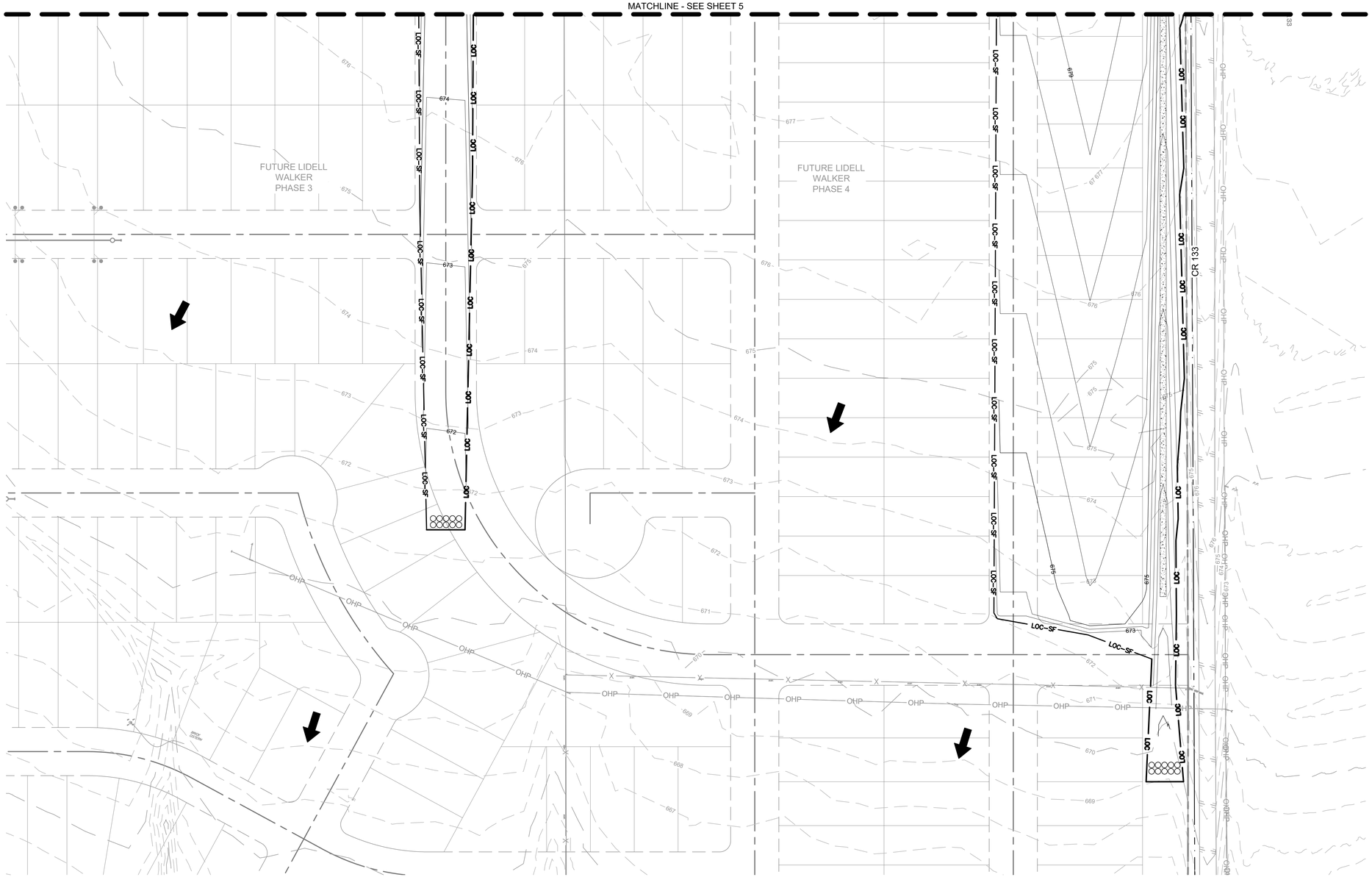

SCALE: 1" = 60'
GRAPHIC SCALE IN FEET
0 30' 60' 120'

LEGEND

	PROPERTY BOUNDARY
XXX	EXISTING MAJOR CONTOUR
XXX	EXISTING MINOR CONTOUR
XXX	PROPOSED MAJOR CONTOUR
XXX	PROPOSED MINOR CONTOUR
LOC	LIMITS OF CONSTRUCTION
SF	SILT FENCE
LOC–SF	LIMITS OF CONSTRUCTION & SILT FENCE
	STABILIZED CONSTRUCTION ENTRANCE
	INLET PROTECTION
	TEMPORARY ROCK BERM
	CONTRACTOR STAGING AREA
	CONCRETE WASHOUT PIT
	PROPOSED STORM SEWER LINE
	PROPOSED INLET
SD	EXISTING STORM SEWER LINE
	EXISTING INLET
	SILT FENCE J-HOOKS
	FLOW ARROW

*TOTAL LAND DISTURBANCE = 11.25 ACRES

FOR OFFICIAL USE ONLY

Reviewed for Substantial Conformance by City of Hutto

Matt Reckor, P.E.
City Engineer
Engineering - City of Hutto

10/01/2024

8834 N. Capital of Texas Hwy.
Suite 140
Austin, Texas 78759
(512)452-0371
FAX(512)454-9933
TBPELS FIRM #2946

GRAY ENGINEERING

NO.	BY	DATE	REVISION DESCRIPTION

RECORD ONLY

LIDELL WALKER PHASE 2B

EROSION CONTROL PLAN (2 OF 2)

PROJECT NO: 1725-11738

DESIGNED BY: ARS

DRAWN BY: ARS

CHECKED BY: TMH

NOTICE:
ALTERATION OF A SEALED DRAWING WITHOUT PROPER NOTIFICATION TO THE RESPONSIBLE ENGINEER IS A VIOLATION OF THE TEXAS ENGINEERING PRACTICE ACT.

STATE OF TEXAS
AUSTIN R. SEIFERT
137175
LICENSED
PROFESSIONAL ENGINEER
07/29/2024

SHEET 6 OF 52

LIDELL WALKER PHASE 2B

PROJECT NO: 2157-ENG

H:\PROJECTS\1725 - GRBK EDGEWOOD LLC\LIDELL WALKER PHASE 2B\CAD\SHEETS\11738-C-EROS.DWG DATE: 7/29/2024 9:14:32 AM BY: MCARTER

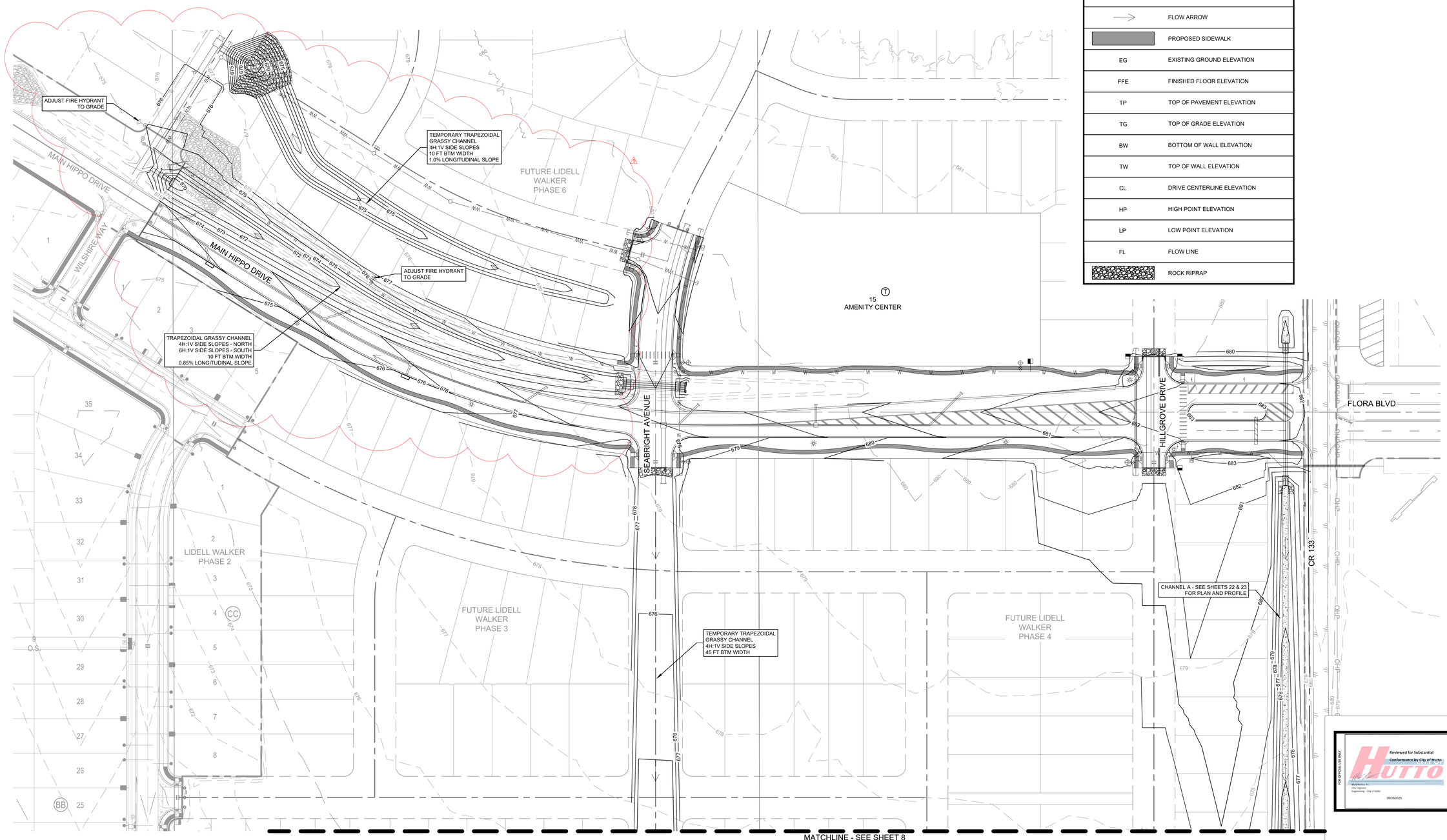

LEGEND	
	PROPERTY BOUNDARY
XXX	EXISTING MAJOR CONTOUR
XXX	EXISTING MINOR CONTOUR
XXX	PROPOSED MAJOR CONTOUR
XXX	PROPOSED MINOR CONTOUR
	DRIVE CENTERLINE
	FEMA FLOODPLAIN
	100 YEAR ENGINEERED FLOODPLAIN
	FLOW ARROW
	PROPOSED SIDEWALK
EG	EXISTING GROUND ELEVATION
FFE	FINISHED FLOOR ELEVATION
TP	TOP OF PAVEMENT ELEVATION
TG	TOP OF GRADE ELEVATION
BW	BOTTOM OF WALL ELEVATION
TW	TOP OF WALL ELEVATION
CL	DRIVE CENTERLINE ELEVATION
HP	HIGH POINT ELEVATION
LP	LOW POINT ELEVATION
FL	FLOW LINE
	ROCK RIPRAP

SCALE: 1" = 60'
GRAPHIC SCALE IN FEET
0 30' 60' 120'

8834 N. Capital of Texas Hwy.
Suite 140
Austin, Texas 78759
(512)452-0371
FAX(512)454-9933
TBPELS FIRM #2946
GRAY ENGINEERING

NO.	BY	DATE	REVISION DESCRIPTION
1		07/22/25	UPDATED GRADING TO INCLUDE TWO ADDITIONAL CHANNELS

RECORD ONLY

LIDELL WALKER PHASE 2B

GRADING PLAN (1 OF 2)

PROJECT NO: 1725-11738
DESIGNED BY: ARS
DRAWN BY: ARS
CHECKED BY: TMH

NOTICE:
ALTERATION OF A SEALED DRAWING WITHOUT PROPER NOTIFICATION TO THE RESPONSIBLE ENGINEER IS A VIOLATION OF THE TEXAS ENGINEERING PRACTICE ACT.

STATE OF TEXAS
AUSTIN R. SEIFERT
137175
LICENSED PROFESSIONAL ENGINEER
08/25/2025

FOR OFFICIAL USE ONLY
Reviewed for Substantial Conformance by City of Hutto
HUTTO
Matt Rennie, P.E.
City Engineer
Engineering - City of Hutto
09/26/2025

SHEET 7 OF 52

PROJECT NO: 2157-ENG LIDELL WALKER PHASE 2B

H:\PROJECTS\1725 - GRBK EDGEWOOD LLC\LIDELL WALKER PHASE 2B\CAD\SHEETS\11738-C-GRAD.DWG DATE: 8/25/2025 4:25:40 PM BY: ASEIFERT

MATCHLINE - SEE SHEET 7

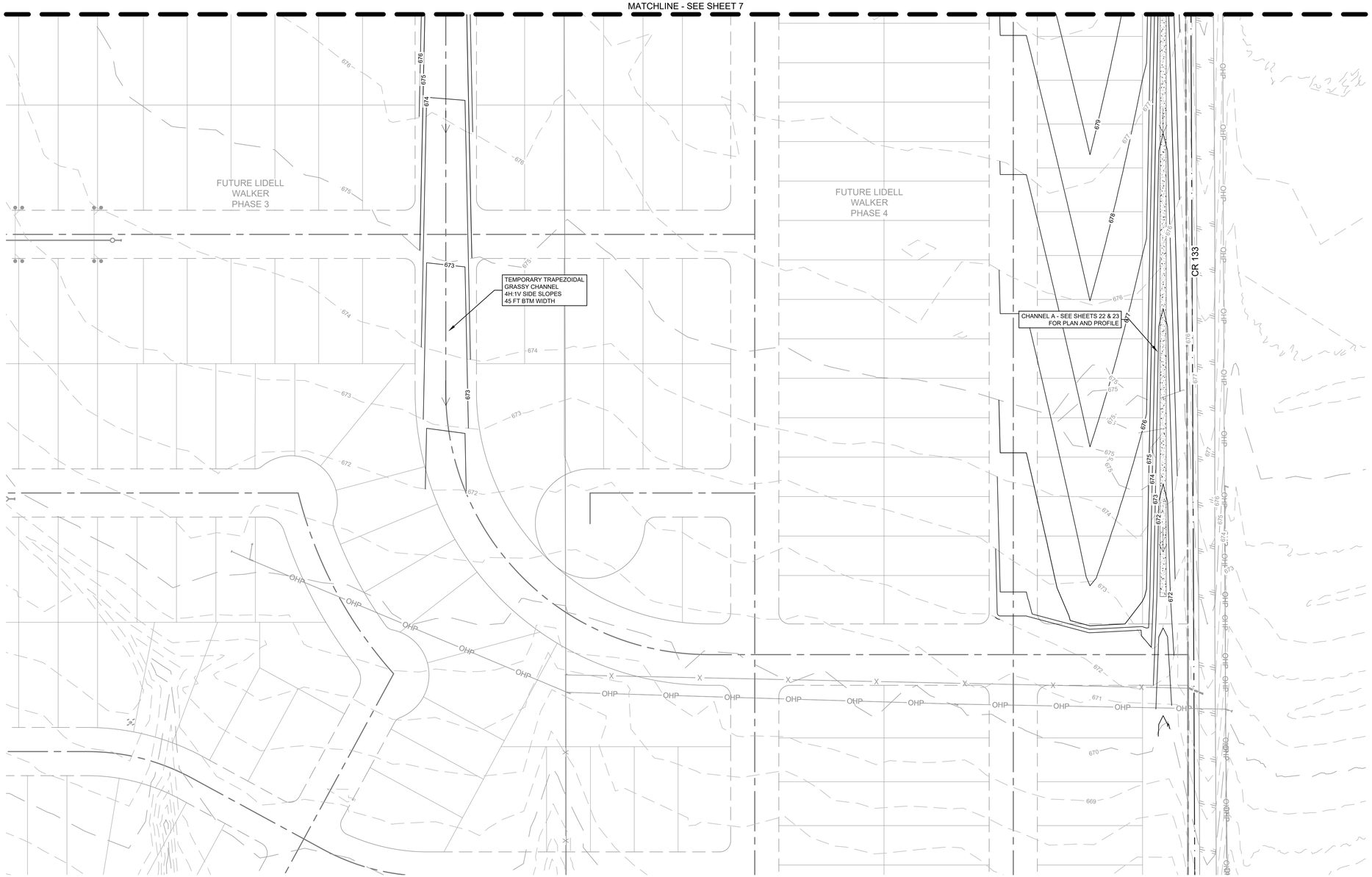

SCALE: 1" = 60'
GRAPHIC SCALE IN FEET
0 30' 60' 120'

LEGEND	
	PROPERTY BOUNDARY
XXX	EXISTING MAJOR CONTOUR
XXX	EXISTING MINOR CONTOUR
XXX	PROPOSED MAJOR CONTOUR
XXX	PROPOSED MINOR CONTOUR
	DRIVE CENTERLINE
	FEMA FLOODPLAIN
	100 YEAR ENGINEERED FLOODPLAIN
	FLOW ARROW
	PROPOSED SIDEWALK
EG	EXISTING GROUND ELEVATION
FFE	FINISHED FLOOR ELEVATION
TP	TOP OF PAVEMENT ELEVATION
TG	TOP OF GRADE ELEVATION
BW	BOTTOM OF WALL ELEVATION
TW	TOP OF WALL ELEVATION
CL	DRIVE CENTERLINE ELEVATION
HP	HIGH POINT ELEVATION
LP	LOW POINT ELEVATION
FL	FLOW LINE

FOR OFFICIAL USE ONLY

Reviewed for Substantial Conformance by City of Hutto

Matt Reckor, P.E.
City Engineer
Engineering - City of Hutto

10/01/2024

8834 N. Capital of Texas Hwy.
Suite 140
Austin, Texas 78759
(512)452-0371
FAX(512)454-9933
TBPELS FIRM #2946

GRAY ENGINEERING

NO.	BY	DATE	REVISION DESCRIPTION

RECORD ONLY

LIDELL WALKER PHASE 2B

GRADING PLAN (2 OF 2)

PROJECT NO: 1725-11738

DESIGNED BY: ARS

DRAWN BY: ARS

CHECKED BY: TMH

NOTICE:
ALTERATION OF A SEALED DRAWING WITHOUT PROPER NOTIFICATION TO THE RESPONSIBLE ENGINEER IS A VIOLATION OF THE TEXAS ENGINEERING PRACTICE ACT.

STATE OF TEXAS
AUSTIN R. SEIFERT
137175
LICENSED
PROFESSIONAL ENGINEER
07/29/2024

SHEET 8 OF 52

PROJECT NO: 2157-ENG LIDELL WALKER PHASE 2B

H:\PROJECTS\1725 - GRBK EDGEWOOD LLC\LIDELL WALKER PHASE 2B\CAD\SHEETS\11738-C-GRAD.DWG DATE: 7/29/2024 9:16:13 AM BY: ASEIFERT

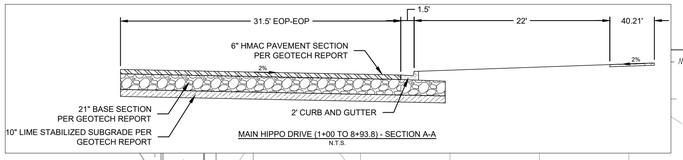

SCALE: 1" = 40'
GRAPHIC SCALE IN FEET
0 20' 40' 80'

CURVE DATA						
NUMBER	DELTA	TANGENT	RADIUS	ARC LENGTH	CHORD LENGTH	CHORD BEARING
C1	32° 07' 49"	273.58	950.00	532.74	525.79	N84° 34' 40.98"E

LEGEND	
	PROPERTY BOUNDARY
XXX	EXISTING MAJOR CONTOUR
XXX	EXISTING MINOR CONTOUR
XXX	PROPOSED MAJOR CONTOUR
XXX	PROPOSED MINOR CONTOUR
	DRIVE CENTERLINE
	FLOW ARROW
	PROPOSED SIDEWALK
	BUILDER SIDEWALK
TC	TOP OF CURB
EOP	EDGE OF PAVEMENT
CW	CROWN
	CURB RAMP
	VALLEY GUTTER
	CURB & GUTTER
	RIBBON CURB

NOTES:

1. **ALL CURB RETURN RADII TO BE 25' AT FACE OF CURB UNLESS OTHERWISE NOTED.**
2. **THE LOCATION OF EXISTING UNDERGROUND UTILITIES ARE SHOWN IN AN APPROXIMATE WAY AND HAVE NOT BEEN INDEPENDENTLY VERIFIED BY THE OWNER OR ITS REPRESENTATIVE. THE CONTRACTOR SHALL DETERMINE THE EXACT LOCATION OF ALL EXISTING UTILITIES BEFORE COMMENCING WORK. THE CONTRACTOR AGREES TO BE FULLY RESPONSIBLE FOR ANY AND ALL DAMAGES WHICH MIGHT BE ASSOCIATED WITH THE CONTRACTORS FAILURE TO LOCATE AND PRESERVE ANY AND ALL UNDERGROUND UTILITIES.**
3. **SIDEWALKS ADJACENT TO SINGLE FAMILY LOTS ARE TO BE CONSTRUCTED CONCURRENTLY WITH EACH SINGLE FAMILY HOUSE.**
4. **ALL CURBS TO BE CURB AND GUTTER UNLESS OTHERWISE NOTED.**
5. **ALL DIMENSIONS ARE TO FACE OF CURB UNLESS OTHERWISE NOTED.**
6. **ALL PAVEMENT MARKINGS SHALL BE PER THE CURRENT "TEXAS MANUAL ON UNIFORM TRAFFIC CONTROL DEVICES (M.U.T.C.D.): PART III MARKINGS." ALL STRIPING TO BE THERMOPLASTIC.**
7. **FOR STANDARD STREET END BARRICADE SEE DETAIL ON SHEET 36.**

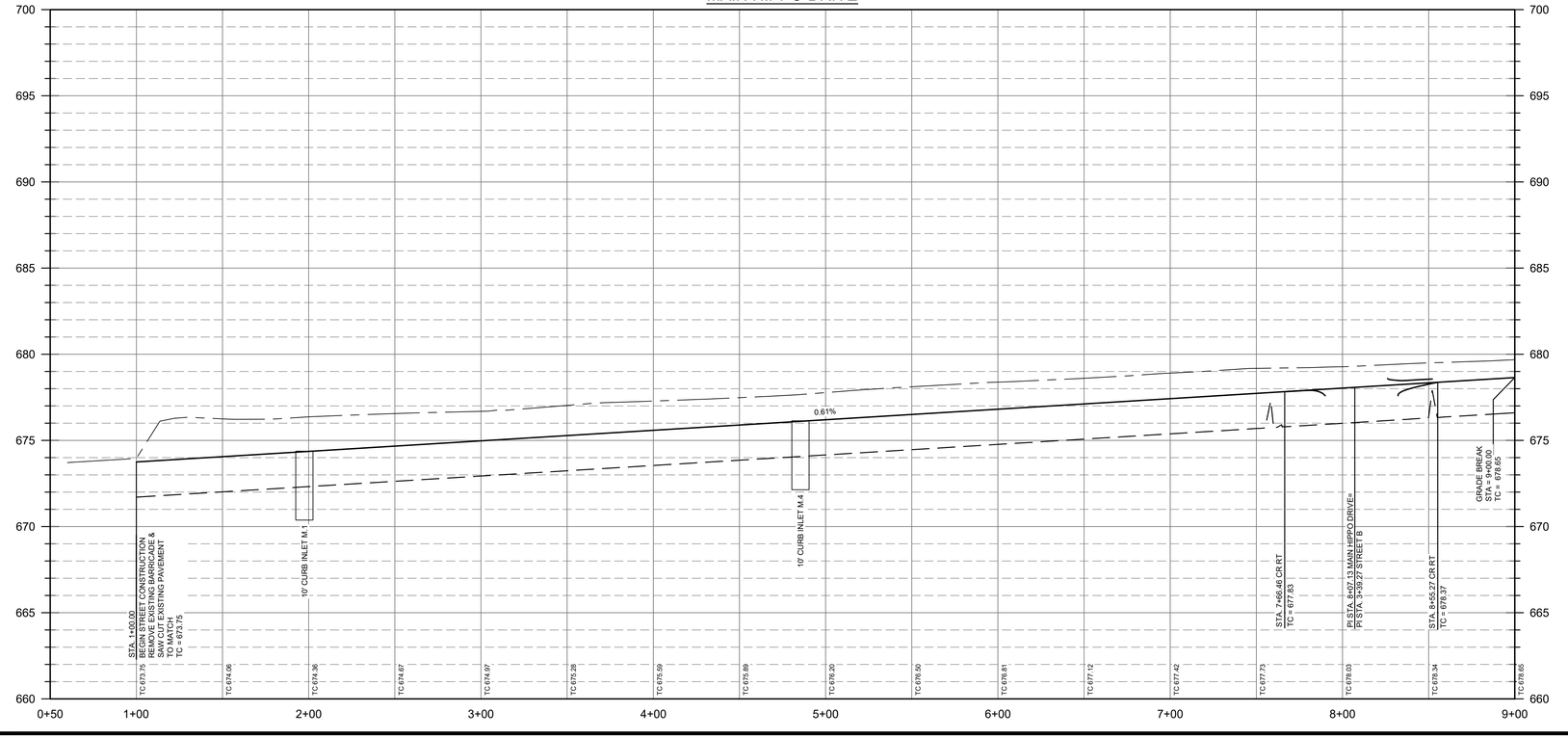

PROFILE LEGEND	
	PROPOSED GRADE
	PROPOSED SUBGRADE
	EXISTING GRADE
	CURB INLET

Reviewed for Substantial Conformance by City of Hutto
FOR OFFICIAL USE ONLY
Matt Rector, P.E.
City Engineer
Engineering - City of Hutto
10/01/2024

8834 N. Capital of Texas Hwy.
Suite 140
Austin, Texas 78759
(512)452-0371
FAX(512)454-9933
TBPELS FIRM #2946
GRAY ENGINEERING

NO.	BY	DATE	REVISION DESCRIPTION
			RECORD ONLY

LIDELL WALKER PHASE 2B

MAIN HIPPO PLAN & PROFILE
(1+00 TO 9+00)

PROJECT NO: 1725-11738
DESIGNED BY: ARS
DRAWN BY: ARS
CHECKED BY: TMH

NOTICE:
ALTERATION OF A SEALED DRAWING WITHOUT PROPER NOTIFICATION TO THE RESPONSIBLE ENGINEER IS A VIOLATION OF THE TEXAS ENGINEERING PRACTICE ACT.

STATE OF TEXAS
AUSTIN R. SEIFERT
137175
LICENSED
PROFESSIONAL ENGINEER
07/29/2024

SHEET 9 OF 52

PROJECT NO: 2157-ENG LIDELL WALKER PHASE 2B

H:\PROJECTS\1725 - GRBK EDGEWOOD LLC\LIDELL WALKER PHASE 2B\CAD\SHEETS\11738-C-ROAD.DWG DATE: 7/29/2024 9:18:25 AM BY: MCARTER

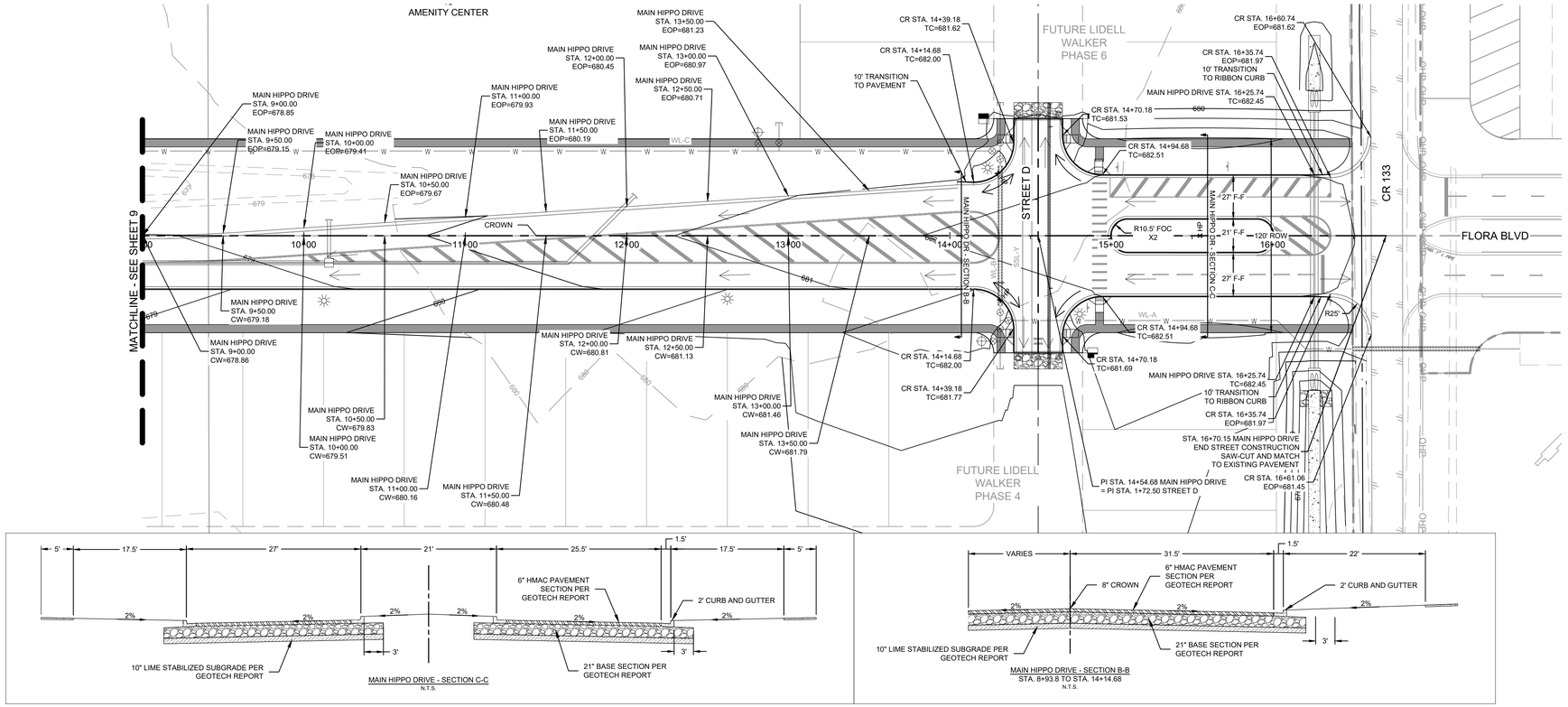

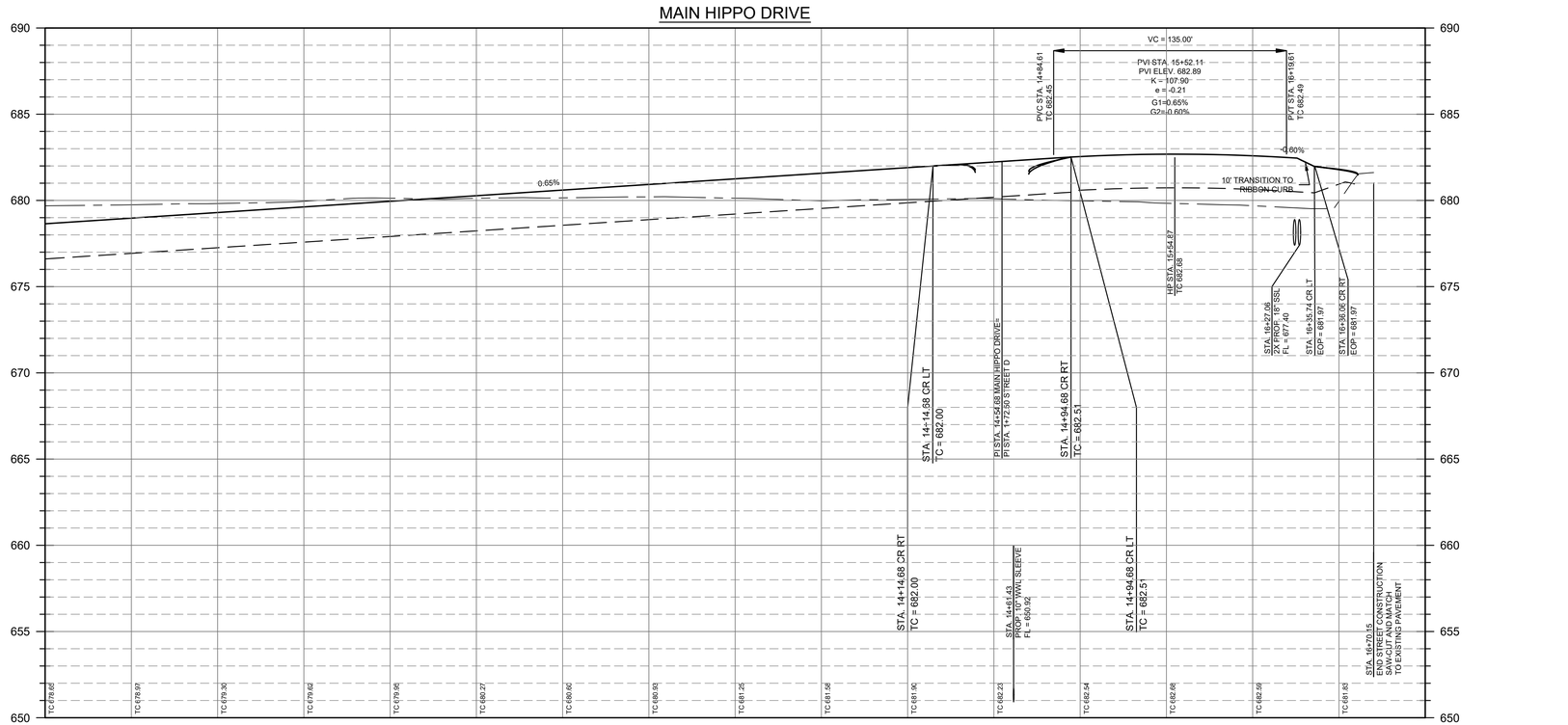

SCALE: 1" = 40'
GRAPHIC SCALE IN FEET
0 20' 40' 80'

LEGEND	
	PROPERTY BOUNDARY
XXX	EXISTING MAJOR CONTOUR
XXX	EXISTING MINOR CONTOUR
XXX	PROPOSED MAJOR CONTOUR
XXX	PROPOSED MINOR CONTOUR
	DRIVE CENTERLINE
	FLOW ARROW
	PROPOSED SIDEWALK
	BUILDER SIDEWALK
TC	TOP OF CURB
EOP	EDGE OF PAVEMENT
CW	CROWN
	CURB RAMP
	VALLEY GUTTER
	CURB & GUTTER
	RIBBON CURB

NOTES:

1. **ALL CURB RETURN RADII TO BE 25' AT FACE OF CURB UNLESS OTHERWISE NOTED.**
2. **THE LOCATION OF EXISTING UNDERGROUND UTILITIES ARE SHOWN IN AN APPROXIMATE WAY AND HAVE NOT BEEN INDEPENDENTLY VERIFIED BY THE OWNER OR ITS REPRESENTATIVE. THE CONTRACTOR SHALL DETERMINE THE EXACT LOCATION OF ALL EXISTING UTILITIES BEFORE COMMENCING WORK. THE CONTRACTOR AGREES TO BE FULLY RESPONSIBLE FOR ANY AND ALL DAMAGES WHICH MIGHT BE ASSOCIATED WITH THE CONTRACTORS FAILURE TO LOCATE AND PRESERVE ANY AND ALL UNDERGROUND UTILITIES.**
3. **SIDEWALKS ADJACENT TO SINGLE FAMILY LOTS ARE TO BE CONSTRUCTED CONCURRENTLY WITH EACH SINGLE FAMILY HOUSE.**
4. **ALL CURBS TO BE CURB AND GUTTER UNLESS OTHERWISE NOTED.**
5. **ALL DIMENSIONS ARE TO FACE OF CURB UNLESS OTHERWISE NOTED.**
6. **ALL PAVEMENT MARKINGS SHALL BE PER THE CURRENT "TEXAS MANUAL ON UNIFORM TRAFFIC CONTROL DEVICES (M.U.T.C.D.): PART III MARKINGS." ALL STRIPING TO BE THERMOPLASTIC.**
7. **FOR STANDARD STREET END BARRICADE SEE DETAIL ON SHEET 36.**

PROFILE LEGEND	
	PROPOSED GRADE
	PROPOSED SUBGRADE
	EXISTING GRADE
	CURB INLET

8834 N. Capital of Texas Hwy.
Suite 140
Austin, Texas 78759
(512)452-0371
FAX(512)454-9933
TBPELS FIRM #2946
GRAY ENGINEERING

NO.	BY	DATE	REVISION DESCRIPTION
			RECORD ONLY

LIDELL WALKER PHASE 2B

MAIN HIPPO PLAN & PROFILE (9+00 TO END)

PROJECT NO: 1725-11738

DESIGNED BY: ARS

DRAWN BY: ARS

CHECKED BY: TMH

NOTICE:
ALTERATION OF A SEALED DRAWING WITHOUT PROPER NOTIFICATION TO THE RESPONSIBLE ENGINEER IS A VIOLATION OF THE TEXAS ENGINEERING PRACTICE ACT.

FOR OFFICIAL USE ONLY
Reviewed for Substantial Conformance by City of Hutto
CITY OF HUTTO
Matt Rector, P.E.
City Engineer
Engineering - City of Hutto
10/01/2024

STATE OF TEXAS
AUSTIN R. SEIFERT
137175
LICENSED PROFESSIONAL ENGINEER
07/29/2024

PROJECT NO: 2157-ENG

LIDELL WALKER PHASE 2B

SHEET 10 OF 52

H:\PROJECTS\1725 - GRBK EDGEWOOD LLC\LIDELL WALKER PHASE 2B\CAD\SHEETS\11738-C-ROAD.DWG DATE: 7/29/2024 9:18:57 AM BY: MCARTER

CURVE DATA						
NUMBER	DELTA	TANGENT	RADIUS	ARC LENGTH	CHORD LENGTH	CHORD BEARING
C2	19° 29' 32"	85.88	500.00	170.10	169.28	S11° 44' 27.49"E

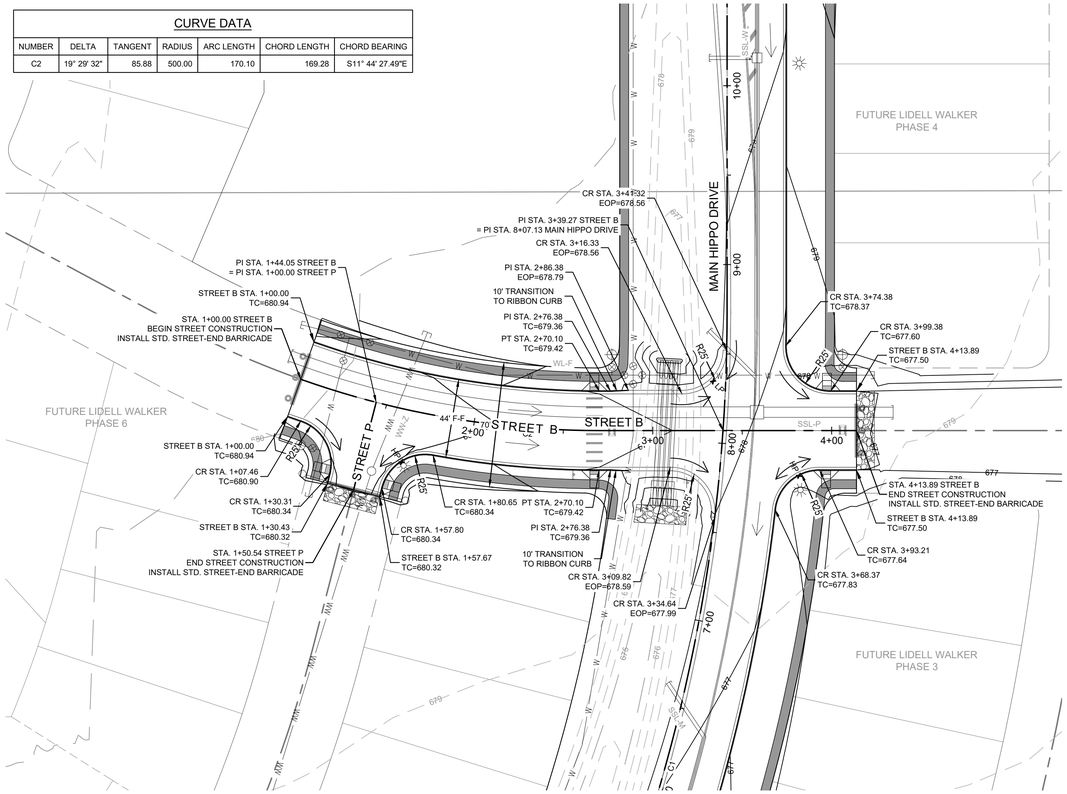

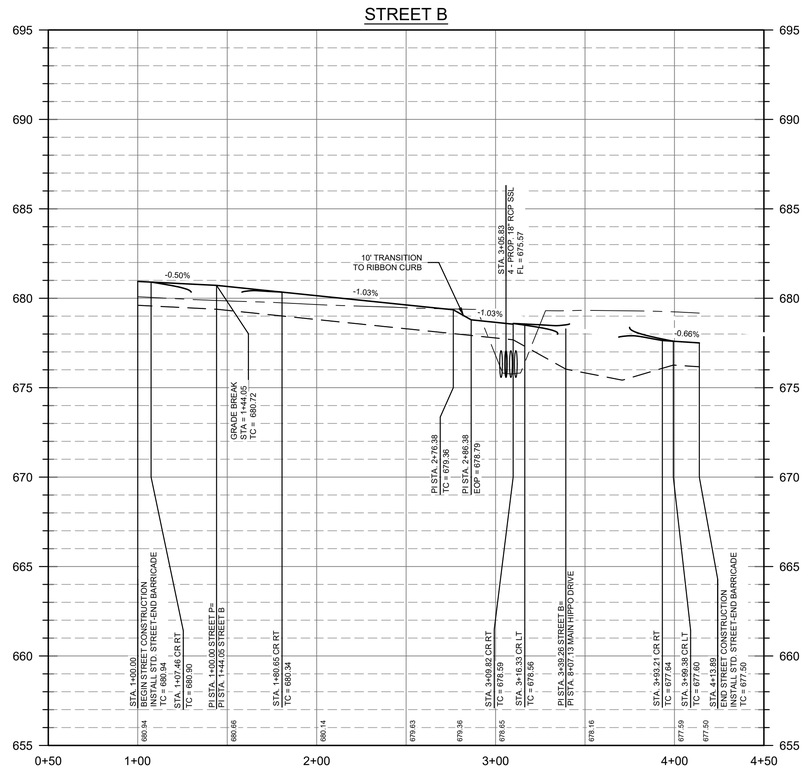

SCALE: 1" = 40'
GRAPHIC SCALE IN FEET
0 20' 40' 80'

LEGEND	
	PROPERTY BOUNDARY
XXX	EXISTING MAJOR CONTOUR
XXX	EXISTING MINOR CONTOUR
XXX	PROPOSED MAJOR CONTOUR
XXX	PROPOSED MINOR CONTOUR
	DRIVE CENTERLINE
	FLOW ARROW
	PROPOSED SIDEWALK
	BUILDER SIDEWALK
TC	TOP OF CURB
EOP	EDGE OF PAVEMENT
CW	CROWN
	CURB RAMP
	VALLEY GUTTER
	CURB & GUTTER
	RIBBON CURB

NOTES:

1. **ALL CURB RETURN RADII TO BE 25' AT FACE OF CURB UNLESS OTHERWISE NOTED.**
2. **THE LOCATION OF EXISTING UNDERGROUND UTILITIES ARE SHOWN IN AN APPROXIMATE WAY AND HAVE NOT BEEN INDEPENDENTLY VERIFIED BY THE OWNER OR ITS REPRESENTATIVE. THE CONTRACTOR SHALL DETERMINE THE EXACT LOCATION OF ALL EXISTING UTILITIES BEFORE COMMENCING WORK. THE CONTRACTOR AGREES TO BE FULLY RESPONSIBLE FOR ANY AND ALL DAMAGES WHICH MIGHT BE ASSOCIATED WITH THE CONTRACTORS FAILURE TO LOCATE AND PRESERVE ANY AND ALL UNDERGROUND UTILITIES.**
3. **SIDEWALKS ADJACENT TO SINGLE FAMILY LOTS ARE TO BE CONSTRUCTED CONCURRENTLY WITH EACH SINGLE FAMILY HOUSE.**
4. **ALL CURBS TO BE CURB AND GUTTER UNLESS OTHERWISE NOTED.**
5. **ALL DIMENSIONS ARE TO FACE OF CURB UNLESS OTHERWISE NOTED.**
6. **ALL PAVEMENT MARKINGS SHALL BE PER THE CURRENT "TEXAS MANUAL ON UNIFORM TRAFFIC CONTROL DEVICES (M.U.T.C.D.): PART III MARKINGS." ALL STRIPING TO BE THERMOPLASTIC.**
7. **FOR STANDARD STREET END BARRICADE SEE DETAIL ON SHEET 36.**

PROFILE LEGEND	
	PROPOSED GRADE
	PROPOSED SUBGRADE
	EXISTING GRADE
	CURB INLET

FOR OFFICIAL USE ONLY

Reviewed for Substantial Conformance by City of Hutto

Matt Rector, P.E.
City Engineer
Engineering - City of Hutto

10/01/2024

8834 N. Capital of Texas Hwy.
Suite 140
Austin, Texas 78759
(512)452-0371
FAX(512)454-9933
TBPELS FIRM #2946

GRAY ENGINEERING

NO.	BY	DATE	REVISION DESCRIPTION

RECORD ONLY

LIDELL WALKER PHASE 2B

STREET B PLAN & PROFILE
(1+00 TO END)

PROJECT NO: 1725-11738

DESIGNED BY: ARS

DRAWN BY: ARS

CHECKED BY: TMH

NOTICE:
ALTERATION OF A SEALED DRAWING WITHOUT PROPER NOTIFICATION TO THE RESPONSIBLE ENGINEER IS A VIOLATION OF THE TEXAS ENGINEERING PRACTICE ACT.

STATE OF TEXAS
AUSTIN R. SEIFERT
137179
LICENSED PROFESSIONAL ENGINEER
07/29/2024

PROJECT NO: 2157-ENG

LIDELL WALKER PHASE 2B

SHEET 11 OF 52

H:\PROJECTS\1725 - GRBK EDGEWOOD LLC\LIDELL WALKER PHASE 2B\ROADSHEETS\11738-C-ROAD.DWG DATE: 7/29/2024 9:19:39 AM BY: MCARTER

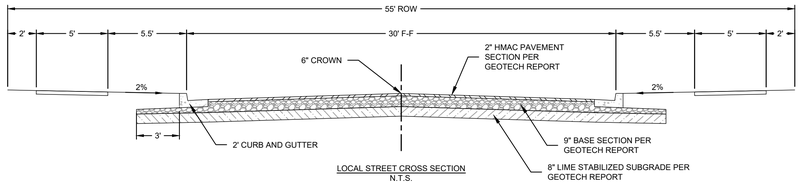

LOCAL STREET CROSS SECTION
N.T.S.

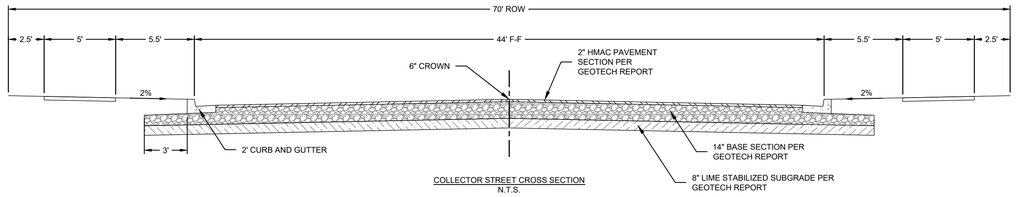

COLLECTOR STREET CROSS SECTION
N.T.S.

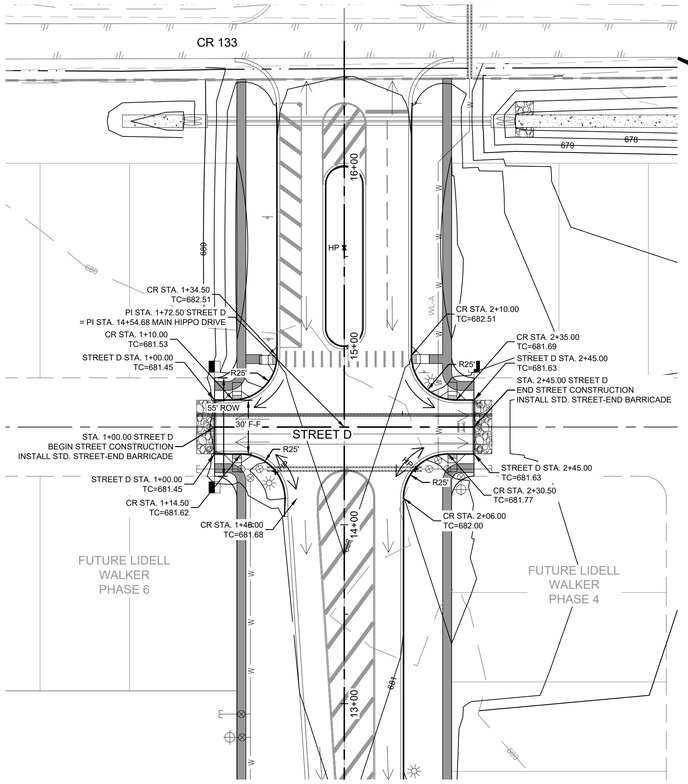

LEGEND	
	PROPERTY BOUNDARY
XXX	EXISTING MAJOR CONTOUR
XXX	EXISTING MINOR CONTOUR
XXX	PROPOSED MAJOR CONTOUR
XXX	PROPOSED MINOR CONTOUR
	DRIVE CENTERLINE
	FLOW ARROW
	PROPOSED SIDEWALK
	BUILDER SIDEWALK
TC	TOP OF CURB
EOP	EDGE OF PAVEMENT
CW	CROWN
	CURB RAMP
	VALLEY GUTTER
	CURB & GUTTER
	RIBBON CURB

NOTES:

1. **ALL CURB RETURN RADII TO BE 25' AT FACE OF CURB UNLESS OTHERWISE NOTED.**
2. **THE LOCATION OF EXISTING UNDERGROUND UTILITIES ARE SHOWN IN AN APPROXIMATE WAY AND HAVE NOT BEEN INDEPENDENTLY VERIFIED BY THE OWNER OR ITS REPRESENTATIVE. THE CONTRACTOR SHALL DETERMINE THE EXACT LOCATION OF ALL EXISTING UTILITIES BEFORE COMMENCING WORK. THE CONTRACTOR AGREES TO BE FULLY RESPONSIBLE FOR ANY AND ALL DAMAGES WHICH MIGHT BE ASSOCIATED WITH THE CONTRACTORS FAILURE TO LOCATE AND PRESERVE ANY AND ALL UNDERGROUND UTILITIES.**
3. **SIDEWALKS ADJACENT TO SINGLE FAMILY LOTS ARE TO BE CONSTRUCTED CONCURRENTLY WITH EACH SINGLE FAMILY HOUSE.**
4. **ALL CURBS TO BE CURB AND GUTTER UNLESS OTHERWISE NOTED.**
5. **ALL DIMENSIONS ARE TO FACE OF CURB UNLESS OTHERWISE NOTED.**
6. **ALL PAVEMENT MARKINGS SHALL BE PER THE CURRENT "TEXAS MANUAL ON UNIFORM TRAFFIC CONTROL DEVICES (M.U.T.C.D.): PART III MARKINGS." ALL STRIPING TO BE THERMOPLASTIC.**
7. **FOR STANDARD STREET END BARRICADE SEE DETAIL ON SHEET 36.**

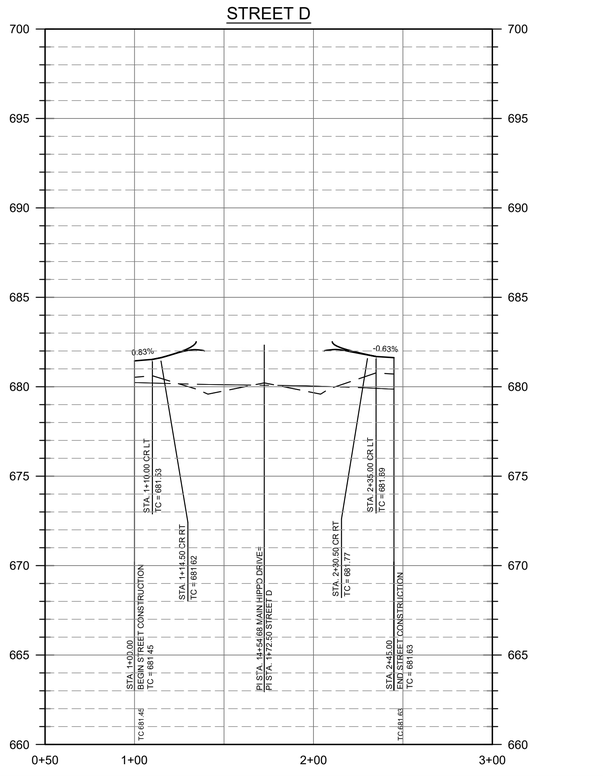

PROFILE LEGEND	
	PROPOSED GRADE
	PROPOSED SUBGRADE
	EXISTING GRADE
	CURB INLET



8834 N. Capital of Texas Hwy.
Suite 140
Austin, Texas 78759
(512)452-0371
FAX(512)454-9933
TBPELS FIRM #2946
GRAY ENGINEERING

NO.	BY	DATE	REVISION DESCRIPTION

RECORD ONLY

LIDELL WALKER PHASE 2B

STREET D PLAN & PROFILE (1+00 TO END)

PROJECT NO: 1725-11738

DESIGNED BY: ARS

DRAWN BY: ARS

CHECKED BY: TMH

NOTICE:
ALTERATION OF A SEALED DRAWING WITHOUT PROPER NOTIFICATION TO THE RESPONSIBLE ENGINEER IS A VIOLATION OF THE TEXAS ENGINEERING PRACTICE ACT.

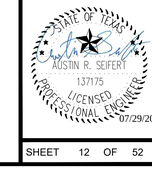

LIDELL WALKER PHASE 2B

PROJECT NO: 2157-ENG

SHEET 12 OF 52

H:\PROJECTS\1725 - GRBK EDGEWOOD LLC\LIDELL WALKER PHASE 2B\CAD\SHEETS\11738-C-ROAD.DWG DATE: 7/29/2024 9:20:08 AM BY: MCARTER

MATCHLINE - SEE SHEET 14

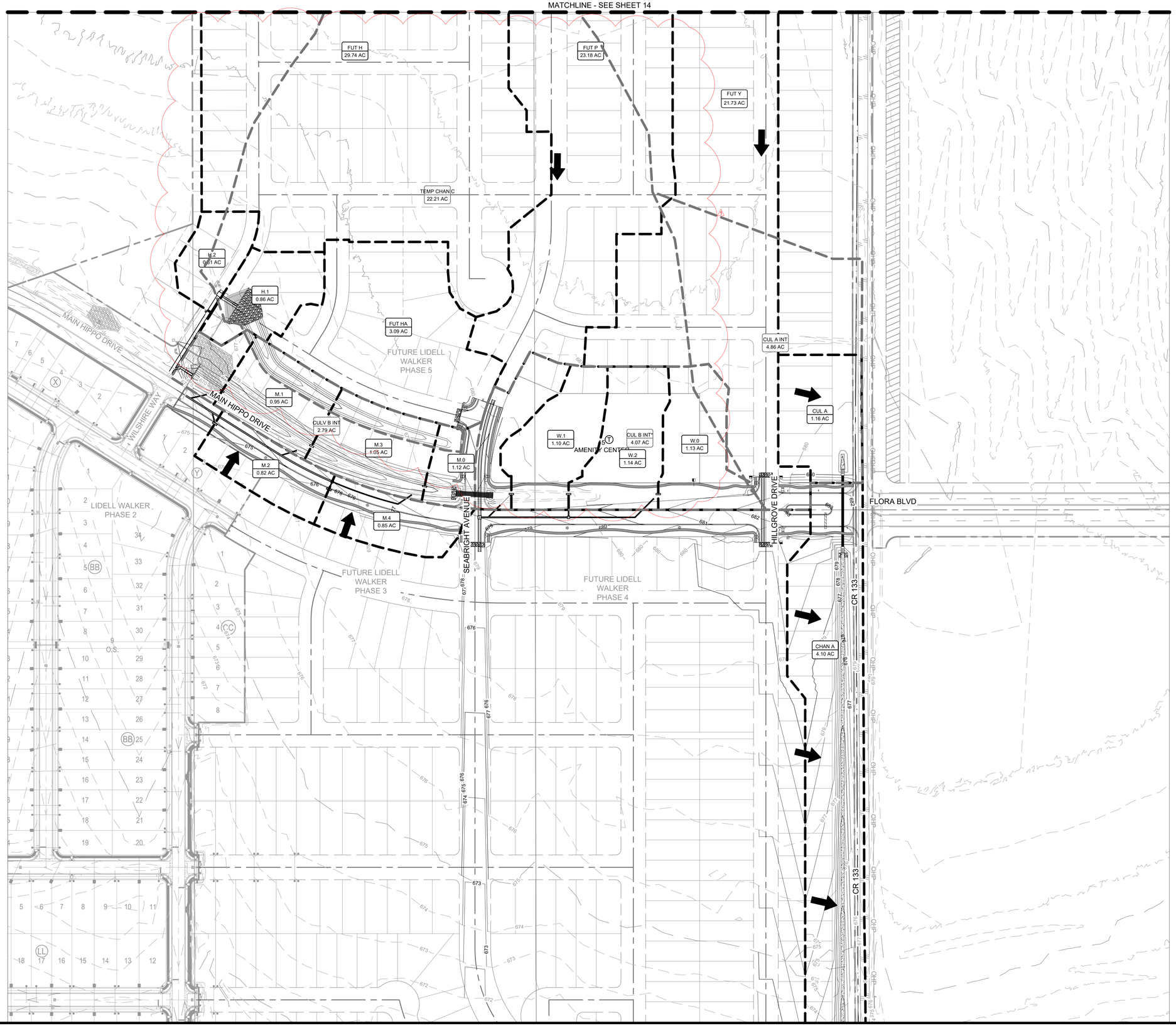

SCALE: 1" = 100'
GRAPHIC SCALE IN FEET
0 50' 100' 200'

LEGEND

	PROPERTY BOUNDARY
XXX	EXISTING MAJOR CONTOUR
XXX	EXISTING MINOR CONTOUR
XXX	PROPOSED MAJOR CONTOUR
XXX	PROPOSED MINOR CONTOUR
	PROPOSED STORM SEWER LINE
	PROPOSED INLET
SD	EXISTING STORM SEWER LINE
	EXISTING INLET
	FLOW ARROW
	DRAINAGE AREA BOUNDARY
	TIME OF CONCENTRATION LINE
DA-XX XX.XX AC	DRAINAGE AREA LABEL

8834 N. Capital of Texas Hwy.
Suite 140
Austin, Texas 78759
(512)452-0371
FAX(512)454-9933
TBPELS FIRM #2946

GRAY ENGINEERING

NO.	BY	DATE	REVISION DESCRIPTION
1		07/22/25	UPDATED DRAINAGE AREAS

RECORD ONLY

LIDELL WALKER PHASE 2B

DRAINAGE AREA MAP (1 OF 2)

PROJECT NO: 1725-11738

DESIGNED BY: ARS

DRAWN BY: ARS

CHECKED BY: TMH

NOTICE:
ALTERATION OF A SEALED DRAWING WITHOUT PROPER NOTIFICATION TO THE RESPONSIBLE ENGINEER IS A VIOLATION OF THE TEXAS ENGINEERING PRACTICE ACT.

Reviewed for Substantial Conformance by City of Hutto
FOR APPROVAL AS PER PDA
Matt Bachus, P.E.
City Engineer
Engineering - City of Hutto
09/26/2025

STATE OF TEXAS
AUSTIN R. SEIFERT
137175
LICENSED PROFESSIONAL ENGINEER
07/23/2025

SHEET 13 OF 52

PROJECT NO: 2157-ENG LIDELL WALKER PHASE 2B

H:\PROJECTS\1725 - GRBK EDGEWOOD LLC\LIDELL WALKER PHASE 2B\CAD\SHEETS\11738-C-DRAN.DWG DATE: 7/23/2025 1:09:15 PM BY: ASEIFERT

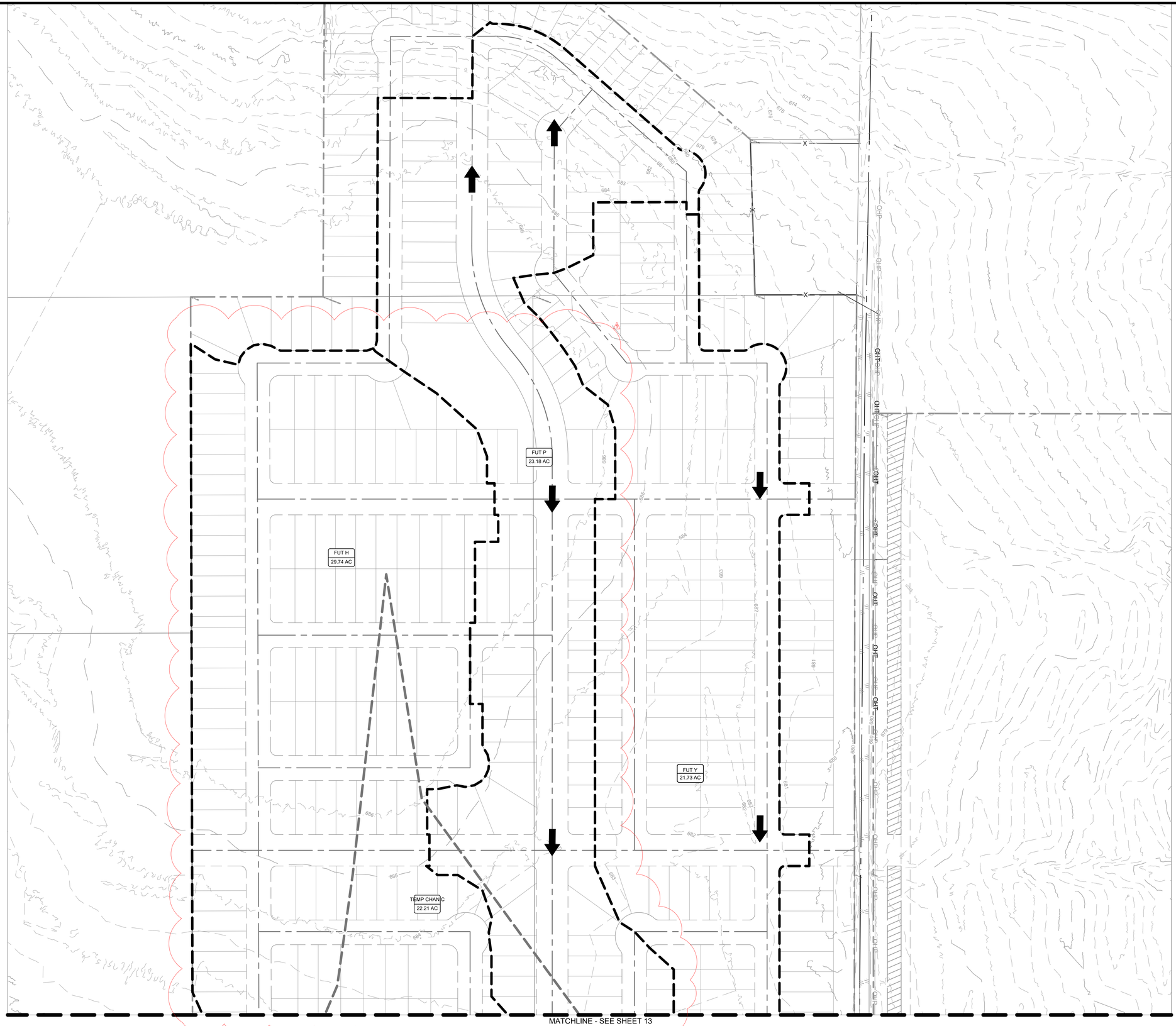

SCALE: 1" = 100'
GRAPHIC SCALE IN FEET
0 50' 100' 200'

LEGEND

	PROPERTY BOUNDARY
XXX	EXISTING MAJOR CONTOUR
XXX	EXISTING MINOR CONTOUR
XXX	PROPOSED MAJOR CONTOUR
XXX	PROPOSED MINOR CONTOUR
	PROPOSED STORM SEWER LINE
	PROPOSED INLET
SD	EXISTING STORM SEWER LINE
	EXISTING INLET
	FLOW ARROW
	DRAINAGE AREA BOUNDARY
	TIME OF CONCENTRATION LINE
DA-XX XX.XX AC	DRAINAGE AREA LABEL

8834 N. Capital of Texas Hwy.
Suite 140
Austin, Texas 78759
(512)452-0371
FAX(512)454-9933
TBPELS FIRM #2946

GRAY ENGINEERING

NO.	BY	DATE	REVISION DESCRIPTION
1		07/22/25	UPDATED DRAINAGE AREAS

RECORD ONLY

LIDELL WALKER PHASE 2B

DRAINAGE AREA MAP (2 OF 2)

PROJECT NO: 1725-11738

DESIGNED BY: ARS

DRAWN BY: ARS

CHECKED BY: TMH

NOTICE:
ALTERATION OF A SEALED DRAWING WITHOUT PROPER NOTIFICATION TO THE RESPONSIBLE ENGINEER IS A VIOLATION OF THE TEXAS ENGINEERING PRACTICE ACT.

FOR OFFICIAL USE ONLY

Reviewed for Substantial Conformance by City of Hutto

Matt Bohac P.E.
City Engineer
Engineering - City of Hutto

09/26/2025

STATE OF TEXAS
AUSTIN R. SEIFERT
137175
LICENSED PROFESSIONAL ENGINEER
07/23/2025

SHEET 14 OF 52

LIDELL WALKER PHASE 2B

PROJECT NO: 2157-ENG

H:\PROJECTS\1725 - GRBK EDGEWOOD LLC\LIDELL WALKER PHASE 2B\CAD\SHEETS\11738-C-DRAN.DWG DATE: 7/23/2025 1:09:20 PM BY: ASEIFERT

LAND USE TABLE

Condition	Drainage Area	Area (ft²)	Area (Acre)	Length of Street - 120' ROW (ft)	Length of Street - 70' ROW (ft)	Length of Street - 55' ROW (ft)	Impervious Area, Street (ft²)	Length of Sidewalk (ft)	Impervious Area (ft²)	Number of 45' Lots	Number of 50' Lots	Impervious Area, Lots (ft²)	Misc. Impervious Area (ft²)	Impervious Area (ft²)	Pervious Area (ft²)	Pervious Type	Impervious (%)	Pervious (%)	Runoff Coefficent			
																			2 Year	10 Year	25 Year	100 Year
DEVELOPED	M.1	41,382	**0.95**	237	0	0	**7,926**	237	**1,183**	0.00	4.50	**13,667**	0.00	**22,776**	**18,606**	Grass (0-2%)	**55.04%**	**44.96%**	**0.51**	**0.58**	**0.63**	**0.71**
DEVELOPED	M.2	35,719	**0.82**	288	0	0	**9,641**	288	**1,439**	0.00	3.00	**9,111**	0.00	**20,191**	**15,528**	Grass (0-2%)	**56.53%**	**43.47%**	**0.52**	**0.59**	**0.63**	**0.72**
DEVELOPED	M.3	44,867	**1.03**	278	0	0	**9,313**	278	**1,390**	0.00	5.00	**15,185**	0.00	**25,888**	**18,979**	Grass (0-2%)	**57.70%**	**42.30%**	**0.53**	**0.59**	**0.64**	**0.72**
DEVELOPED	M.4	37,026	**0.85**	322	0	0	**10,780**	322	**1,609**	0.00	3.00	**9,111**	0.00	**21,500**	**15,526**	Grass (0-2%)	**58.07%**	**41.93%**	**0.53**	**0.60**	**0.64**	**0.72**
DEVELOPED	M.0	48,787	**1.12**	201	350	0	**14,609**	551	**2,755**	7.75	0.00	**1,997**	4,882.00	**24,242**	**24,545**	Grass (0-2%)	**49.69%**	**50.31%**	**0.49**	**0.55**	**0.60**	**0.68**
DEVELOPED	W.1	47,916	**1.10**	127	0	0	**4,255**	127	**635**	0.00	0.00		20,912.00	**25,802**	**22,115**	Grass (0-2%)	**53.85%**	**46.15%**	**0.51**	**0.57**	**0.62**	**0.70**
DEVELOPED	W.2	49,658	**1.14**	200	0	0	**6,700**	200	**1,000**	0.00	0.00		15,792.00	**23,492**	**26,166**	Grass (0-2%)	**47.31%**	**52.69%**	**0.48**	**0.54**	**0.59**	**0.67**
DEVELOPED	W.0	49,223	**1.13**	240	0	0	**8,040**	240	**1,200**	0.75	2.00	**8,071**	5,574.00	**22,885**	**26,338**	Grass (0-2%)	**46.49%**	**53.51%**	**0.47**	**0.54**	**0.58**	**0.66**
DEVELOPED	H.1	37,462	**0.86**	0	0	518	**8,029**	518	**2,590**	2.75	0.25	**8,080**	0.00	**18,699**	**18,763**	Grass (0-2%)	**49.91%**	**50.09%**	**0.49**	**0.55**	**0.60**	**0.68**
DEVELOPED	H.2	26,572	**0.61**	0	0	244	**3,782**	244	**1,220**	1.75	1.50	**9,214**	0.00	**14,216**	**12,356**	Grass (0-2%)	**53.50%**	**46.50%**	**0.51**	**0.57**	**0.62**	**0.70**
DEVELOPED	FUT H	1,295,474	**29.74**	0	2,194	10,306	**209,108**	12,500	**62,500**	128.00	34.00	**443,994**	86,298.00	**801,900**	**493,574**	Grass (0-2%)	**61.90%**	**38.10%**	**0.55**	**0.62**	**0.66**	**0.74**
DEVELOPED	FUT HA	134,600	**3.09**	0	101	1,432	**24,469**	1,533	**7,665**	7.75	0.00	**20,631**	0.00	**52,764**	**81,836**	Grass (0-2%)	**39.20%**	**60.80%**	**0.44**	**0.50**	**0.54**	**0.62**
DEVELOPED	FUT P	1,009,721	**23.18**	0	6,880	4,812	**303,972**	11,692	**58,460**	56.25	37.75	**264,384**	115,510.00	**742,326**	**267,395**	Grass (0-2%)	**73.52%**	**26.48%**	**0.60**	**0.67**	**0.72**	**0.81**
DEVELOPED	FUT Y	946,559	**21.73**	0	1,464	8,783	**305,213**	10,247	**51,235**	52.50	50.50	**293,124**	0.00	**649,572**	**296,987**	Grass (0-2%)	**68.62%**	**31.38%**	**0.58**	**0.65**	**0.70**	**0.78**
DEVELOPED	CUL A	50,530	**1.16**	0	0	0	**0**	0	**0**	0.00	5.25	**15,944**	2,282.58	**18,227**	**32,303**	Grass (0-2%)	**36.07%**	**63.93%**	**0.42**	**0.48**	**0.53**	**0.60**
DEVELOPED	CHAN A	178,596	**4.10**	106	0	0	**3,551**	106	**530**	4.00	10.75	**43,296**	12,597.50	**59,974**	**118,622**	Grass (0-2%)	**33.58%**	**66.42%**	**0.41**	**0.47**	**0.51**	**0.59**
UNDEVELOPED	CUL A INT	211,702	**4.86**	0	0	0	0	0	**0**	0.00	0.00		4,167.00	**4,167**	**207,535**	Grass (0-2%)	**1.97%**	**98.03%**	**0.26**	**0.31**	**0.35**	**0.42**
UNDEVELOPED	CUL B INT	298,822	**6.86**	132	473	120	**18,791**	725	**3,627**	1.50	11.50	**38,919**	47,160.00	**108,496**	**190,325**	Grass (0-2%)	**36.31%**	**63.69%**	**0.42**	**0.49**	**0.53**	**0.61**
DEVELOPED	CUL B INT*	177,289	**4.07**	132	278	0	**10,684**	410	**2,052**	0.75	2.00	**8,071**	47,160.00	**67,966**	**109,323**	Grass (0-2%)	**38.34%**	**61.66%**	**0.43**	**0.50**	**0.54**	**0.62**
UNDEVELOPED	TEMP CHAN C	967,468	**22.21**	0	86	0	**1,935**	86	**430**	0.00	0.00		0.00	**2,365**	**965,103**	Grass (0-2%)	**0.24%**	**99.76%**	**0.25**	**0.30**	**0.34**	**0.41**

* THE DRAINAGE AREA CUL B INT ASSUMES THAT AMENITY CENTER IS FULLY DEVELOPED TO FIND IN WHAT INTERIM CONDITION THE MOST FLOW WOULD BE SENT TO CULVERT B.

PEAK FLOW TABLE (EXISTING CONDITIONS)

Drainage Area	Inlet	Area (Acre)	Impervious (%)	Pervious(%)	Time of Concentration (min.)	2 Year			10 Year			25 Year			100 Year		
						C	I (in/hr)	Q (ft³/s)	C	I (in/hr)	Q (ft³/s)	C	I (in/hr)	Q (ft³/s)	C	I (in/hr)	Q (ft³/s)
M.1	M.1	**0.95**	**55%**	**45%**	**7.87**	**0.51**	**5.42**	**2.65**	**0.58**	**7.95**	**4.38**	**0.63**	**9.63**	**5.73**	**0.71**	**12.39**	**8.32**
M.2	M.2	**0.82**	**57%**	**43%**	**8.22**	**0.52**	**5.33**	**2.28**	**0.59**	**7.82**	**3.77**	**0.63**	**9.48**	**4.93**	**0.72**	**12.19**	**7.15**
M.3	M.3	**1.03**	**58%**	**42%**	**8.50**	**0.53**	**5.27**	**2.86**	**0.59**	**7.73**	**4.73**	**0.64**	**9.36**	**6.17**	**0.72**	**12.04**	**8.95**
M.4	M.4	**0.85**	**58%**	**42%**	**8.19**	**0.53**	**5.34**	**2.40**	**0.60**	**7.84**	**3.97**	**0.64**	**9.49**	**5.18**	**0.72**	**12.21**	**7.51**
M.0	M.0	**1.12**	**50%**	**50%**	**7.00**	**0.49**	**5.64**	**3.08**	**0.55**	**8.28**	**5.13**	**0.60**	**10.03**	**6.72**	**0.68**	**12.91**	**9.81**
W.1	W.1	**1.10**	**54%**	**46%**	**7.00**	**0.51**	**5.64**	**3.15**	**0.57**	**8.28**	**5.23**	**0.62**	**10.03**	**6.84**	**0.70**	**12.91**	**9.95**
W.2	W.2	**1.14**	**47%**	**53%**	**7.00**	**0.48**	**5.64**	**3.07**	**0.54**	**8.28**	**5.11**	**0.59**	**10.03**	**6.70**	**0.67**	**12.91**	**9.79**
W.0	W.0	**1.13**	**46%**	**54%**	**7.00**	**0.47**	**5.64**	**3.01**	**0.54**	**8.28**	**5.02**	**0.58**	**10.03**	**6.60**	**0.66**	**12.91**	**9.64**
H.1	H.1	**0.86**	**50%**	**50%**	**7.29**	**0.49**	**5.56**	**2.34**	**0.55**	**8.16**	**3.89**	**0.60**	**9.89**	**5.10**	**0.68**	**12.73**	**7.44**
H.2	H.2	**0.61**	**54%**	**46%**	**8.47**	**0.51**	**5.28**	**1.63**	**0.57**	**7.74**	**2.70**	**0.62**	**9.37**	**3.53**	**0.70**	**12.06**	**5.14**
FUT H	Future	**29.74**	**62%**	**38%**	**14.23**	**0.55**	**4.27**	**69.53**	**0.62**	**6.24**	**114.31**	**0.66**	**7.53**	**148.27**	**0.74**	**9.66**	**213.93**
FUT HA	Future	**3.09**	**39%**	**61%**	**8.41**	**0.44**	**5.29**	**7.17**	**0.50**	**7.76**	**11.99**	**0.54**	**9.40**	**15.79**	**0.62**	**12.09**	**23.22**
FUT P	Future	**23.18**	**74%**	**26%**	**16.87**	**0.60**	**3.95**	**55.18**	**0.67**	**5.76**	**90.08**	**0.72**	**6.94**	**116.20**	**0.81**	**8.89**	**166.31**
FUT Y	Future	**21.73**	**69%**	**31%**	**17.49**	**0.58**	**3.88**	**48.85**	**0.65**	**5.66**	**79.89**	**0.70**	**6.82**	**103.22**	**0.78**	**8.73**	**148.05**
CUL A	Culvert A	**1.16**	**36%**	**64%**	**9.24**	**0.42**	**5.11**	**2.51**	**0.48**	**7.49**	**4.21**	**0.53**	**9.07**	**5.55**	**0.60**	**11.66**	**8.18**
CHAN A	Channel A	**4.10**	**34%**	**66%**	**14.50**	**0.41**	**4.24**	**7.14**	**0.47**	**6.19**	**11.95**	**0.51**	**7.46**	**15.75**	**0.59**	**9.58**	**23.22**
CUL A INT	Culvert A	**4.86**	**2%**	**98%**	**34.13**	**0.26**	**2.73**	**3.44**	**0.31**	**3.94**	**5.93**	**0.35**	**4.73**	**8.05**	**0.42**	**5.99**	**12.24**
CUL B INT	Culvert B	**6.86**	**36%**	**64%**	**15.19**	**0.42**	**4.15**	**12.07**	**0.49**	**6.05**	**20.15**	**0.53**	**7.30**	**26.49**	**0.61**	**9.36**	**38.93**
CUL B INT*	Culvert B	**4.07**	**38%**	**62%**	**10.89**	**0.43**	**4.79**	**8.46**	**0.50**	**7.02**	**14.15**	**0.54**	**8.48**	**18.61**	**0.62**	**10.90**	**27.37**
TEMP CHAN C	Temp Channel C	**22.21**	**0%**	**100%**	**32.48**	**0.25**	**2.80**	**15.64**	**0.30**	**4.05**	**27.11**	**0.34**	**4.87**	**36.89**	**0.41**	**6.17**	**56.38**

* THE DRAINAGE AREA CUL B INT ASSUMES THAT AMENITY CENTER IS FULLY DEVELOPED TO FIND IN WHAT INTERIM CONDITION THE MOST FLOW WOULD BE SENT TO CULVERT B.

25 Year Storm

Drainage Area	Inlet	Upstream Inlet	Qadd (ft³/s)	Qpeak (ft³/s)	Street Capacity					Inlet on Grade						Sump Inlet					Remarks	Clear Width
					Street Width (ft)	Slope (%)	Gutter Depression	Water Depth (ft)	Ponded Width	Qa/La	Length Needed (ft)	Length (ft)	L/Lneed	a/Y_o	Possible Q (ft³/s)	Qpass (ft³/s)	Clogging Factor	Q (ft³/s)	Allowable head (ft)	Inlet Length (ft)	Calculated head (ft)		
M.1	M.1	M.3		5.73	66	0.61%	0.42	**0.44**	**13.82**	0.90	6.37	10	1	0.95	8.99	0.00							39.34
M.2	M.2	M.4		4.93	66	0.61%	0.42	**0.41**	**12.84**	0.87	5.64	10	1	1.01	8.74	0.00							39.34
M.3	M.3	M.0		6.17	66	0.61%	0.42	**0.45**	**14.35**	0.91	6.76	10	1	0.93	9.12	0.00							38.49
M.4	M.4			5.18	66	0.61%	0.42	**0.42**	**13.16**	0.88	5.87	10	1	0.99	8.82	0.00							38.49
M.0	M.0	W.1		6.72	66	0.61%	0.42	**0.46**	**14.99**	0.93	7.24	10	1	0.90	9.28	0.00							46.63
W.1	W.1	W.2		6.84	66	0.65%	0.42	**0.46**	**14.88**	0.93	7.39	10	1	0.90	9.26	0.00							36.23
W.2	W.2	W.0		6.70	66	0.65%	0.42	**0.46**	**14.73**	0.92	7.27	10	1	0.91	9.22	0.00							36.55
W.0	W.0			6.60	66	0.65%	0.42	**0.45**	**14.61**	0.92	7.18	10	1	0.92	9.19	0.00							36.79
H.1	H.1			5.10	30	0.60%	0.42	**0.46**	**6.67**	0.92	5.54	10	1	0.91	9.21	0.00							16.65
H.2	H.2			3.53	30	0.60%	0.42	**0.40**	**5.67**	0.86	4.09	10	1	1.03	8.64	0.00							18.66

100 Year Storm

Drainage Area	Inlet	Upstream Inlet	Qpass (ft³/s)	Qadd (ft³/s)	Qpeak (ft³/s)	Street Capacity					Inlet on Grade						Sump Inlet					Remarks
						Street Width (ft)	Slope (%)	Gutter Depressio	Water Depth (ft)	Ponded Width	Qa/La	Length Needed (ft)	Length (ft)	L/Lneed	a/Y_o	Possible Q (ft³/s)	Qpass (ft³/s)	Clogging Factor	Q (ft³/s)	Allowable head (ft)	Inlet Length (ft)	Calculated head (ft)	
M.1	M.1	M.3			8.32	66	0.61%	0.42	**0.50**	16.80	0.97	8.57	10	1.00	0.83	9.71	0.00						
M.2	M.2	M.4			7.15	66	0.61%	0.42	**0.47**	15.48	0.94	7.60	10	1.00	0.88	9.40	0.00						
M.3	M.3	M.0			8.95	66	0.61%	0.42	**0.51**	17.50	0.99	9.08	10	1.00	0.81	9.86	0.00						
M.4	M.4				7.51	66	0.61%	0.42	**0.48**	15.89	0.95	7.91	10	1.00	0.86	9.50	0.00						
M.0	M.0	W.1			9.81	66	0.61%	0.42	**0.53**	18.46	1.01	9.75	10	1.00	0.78	10.06	0.00						
W.1	W.1	W.2			9.95	66	0.65%	0.42	**0.53**	18.28	1.00	9.93	10	1.00	0.79	10.02	0.00						
W.2	W.2	W.0			9.79	66	0.65%	0.42	**0.53**	18.10	1.00	9.81	10	1.00	0.79	9.99	0.00						
W.0	W.0				9.64	66	0.65%	0.42	**0.52**	17.94	1.00	9.69	10	1.00	0.80	9.95	0.00						
H.1	H.1			0.73	6.71	30	0.60%	0.42	**0.50**	7.61	0.97	6.92	10	1.00	0.83	9.69	0.00						
H.2	H.2				5.14	30	0.60%	0.42	**0.46**	6.70	0.92	5.57	10	1.00	0.91	9.22	0.00						

8834 N. Capital of Texas Hwy.
Suite 140
Austin, Texas 78759
(512)452-0371
FAX(512)454-9933
TBPELS FIRM #2946

GRAY ENGINEERING

NO.	BY	DATE	REVISION DESCRIPTION
1		07/22/25	UPDATED DRAINAGE AREA CALCULATIONS

RECORD ONLY

LIDELL WALKER PHASE 2B

DRAINAGE AREA CALCULATIONS

PROJECT NO: 1725-11738

DESIGNED BY: ARS

DRAWN BY: ARS

CHECKED BY: TMH

NOTICE:
ALTERATION OF A SEALED DRAWING WITHOUT PROPER NOTIFICATION TO THE RESPONSIBLE ENGINEER IS A VIOLATION OF THE TEXAS ENGINEERING PRACTICE ACT.

FOR OFFICIAL USE ONLY
Reviewed for Substantial Conformance by City of Hutto
Matt Bertez, P.E.
City Engineer
Engineering - City of Hutto
09/26/2025

STATE OF TEXAS
AUSTIN R. SEIFERT
137175
LICENSED PROFESSIONAL ENGINEER
07/23/2025

SHEET 15 OF 52

PROJECT NO: 2157-ENG LIDELL WALKER PHASE 2B

H:\PROJECTS\1725 - GRBK EDGEWOOD LLC\LIDELL WALKER PHASE 2B\CAD\SHEETS\11738-C-DRAN.DWG DATE: 7/23/2025 1:09:21 PM BY: ASEIFERT

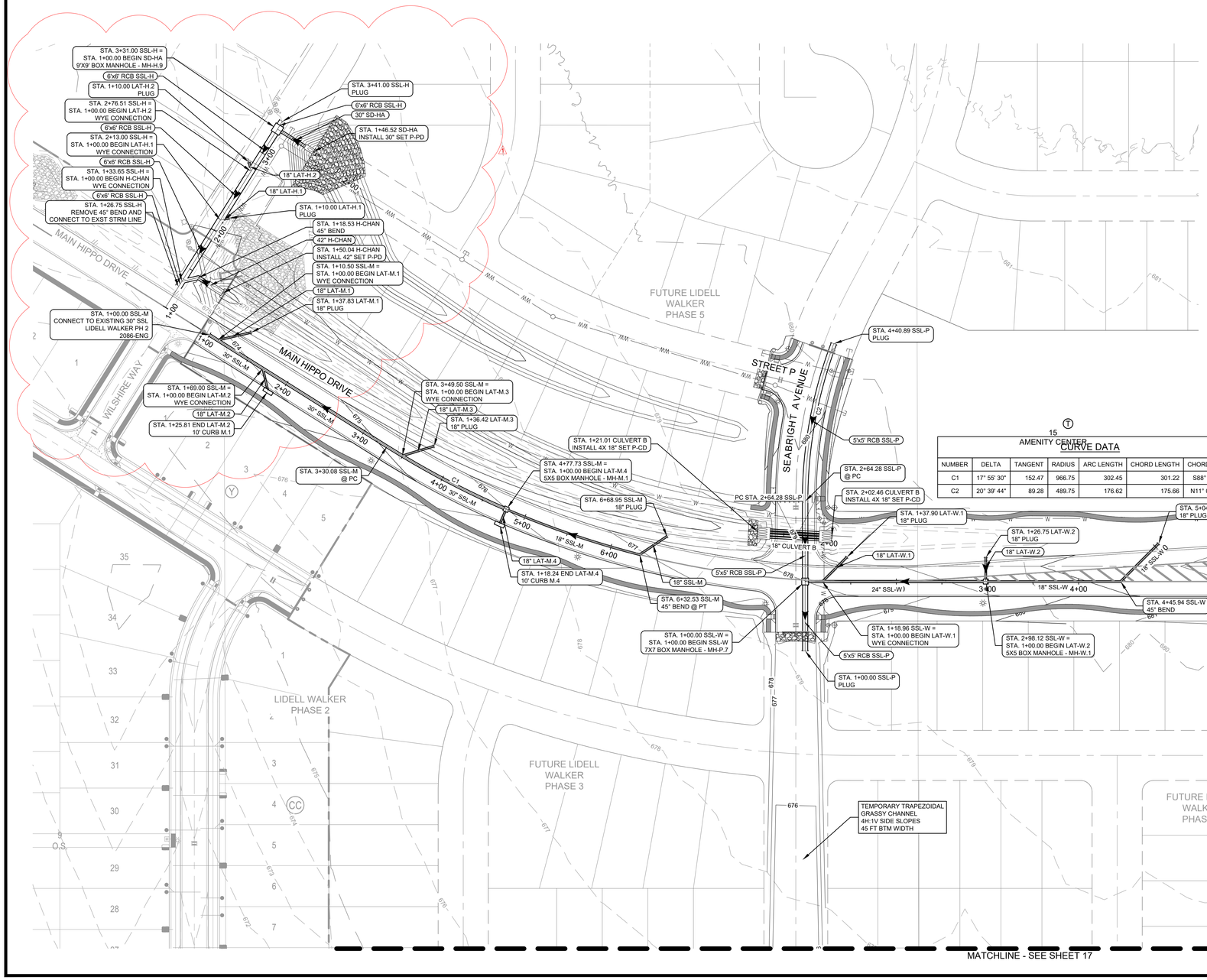

CURVE DATA

NUMBER	DELTA	TANGENT	RADIUS	ARC LENGTH	CHORD LENGTH	CHORD BEARING
C1	17° 55' 30"	152.47	966.75	302.45	301.22	S88° 19' 09.49"E
C2	20° 39' 44"	89.28	489.75	176.62	175.66	N11° 09' 21.64"W

LEGEND

- PROPERTY BOUNDARY
- EXISTING MAJOR CONTOUR
- EXISTING MINOR CONTOUR
- PROPOSED MAJOR CONTOUR
- PROPOSED MINOR CONTOUR
- FEMA FLOODPLAIN
- 100 YEAR ENGINEERED FLOODPLAIN
- PROPOSED STORM SEWER LINE
- PROPOSED INLET
- PROPOSED BOX MANHOLE
- PROPOSED MANHOLE
- EXISTING STORM SEWER LINE
- EXISTING INLET
- EXISTING BOX MANHOLE
- EXISTING MANHOLE
- PROPOSED WASTEWATER LINE
- PROPOSED WASTEWATER MANHOLE
- EXISTING WASTEWATER LINE
- EXISTING WASTEWATER MANHOLE
- PROPOSED WATER LINE
- EXISTING WATER LINE
- PROPOSED FIRE HYDRANT
- PROPOSED GATE VALVE
- EXISTING FIRE HYDRANT
- EXISTING GATE VALVE

SCALE: 1" = 60'
GRAPHIC SCALE IN FEET
0 30' 60' 120'

NOTES:

1. **ALL INLET WYE CONNECTIONS TO BE 45 DEGREES UNLESS OTHERWISE NOTED.**
2. **CONTRACTOR TO BE AWARE OF OVERHEAD ELECTRIC LINES AND UNDERGROUND GAS LINES AT ALL TIMES.**
3. **ALL CONNECTIONS TO PRECAST STRUCTURES WILL BE THROUGH THE KNOCK OUT. ANY DAMAGES OUTSIDE THE KNOCK OUT WILL REQUIRE REPLACEMENT OF STRUCTURE.**
4. **ALL CONCRETE STORM PIPES ARE TO BE CLASS III UNLESS OTHERWISE SPECIFIED.**

Reviewed for Substantial Conformance by City of Hutto
FOR OFFICIAL USE ONLY
Matt Bates, P.E.
City Engineer
Engineering - City of Hutto
09/26/2025

8834 N. Capital of Texas Hwy.
Suite 140
Austin, Texas 78759
(512)452-0371
FAX(512)454-9933
TBPELS FIRM #2946
GRAY ENGINEERING

NO.	BY	DATE	REVISION DESCRIPTION
1		07/22/25	ADDED STORM LINES SSL-H, SD-HA AND H-CHAN

RECORD ONLY

LIDELL WALKER PHASE 2B

OVERALL STORM SEWER PLAN (1 OF 2)

PROJECT NO: 1725-11738
DESIGNED BY: ARS
DRAWN BY: ARS
CHECKED BY: TMH

NOTICE:
ALTERATION OF A SEALED DRAWING WITHOUT PROPER NOTIFICATION TO THE RESPONSIBLE ENGINEER IS A VIOLATION OF THE TEXAS ENGINEERING PRACTICE ACT.

STATE OF TEXAS
AUSTIN R. SEIFERT
137175
LICENSED PROFESSIONAL ENGINEER
07/23/2025

SHEET 16 OF 52

LIDELL WALKER PHASE 2B
PROJECT NO: 2157-ENG

H:\PROJECTS\1725 - GRBK EDGEWOOD LLC\LIDELL WALKER PHASE 2B\CAD\SHEETS\11738-C-STRM-O.DWG DATE: 7/23/2025 1:10:12 PM BY: ASEIFERT



SCALE: 1" = 60'
GRAPHIC SCALE IN FEET
0 30' 60' 120'

LEGEND

- PROPERTY BOUNDARY
- EXISTING MAJOR CONTOUR
- EXISTING MINOR CONTOUR
- PROPOSED MAJOR CONTOUR
- PROPOSED MINOR CONTOUR
- FEMA FLOODPLAIN
- 100 YEAR ENGINEERED FLOODPLAIN
- PROPOSED STORM SEWER LINE
- PROPOSED INLET
- PROPOSED BOX MANHOLE
- PROPOSED MANHOLE
- EXISTING STORM SEWER LINE
- EXISTING INLET
- EXISTING BOX MANHOLE
- EXISTING MANHOLE
- PROPOSED WASTEWATER LINE
- PROPOSED WASTEWATER MANHOLE
- EXISTING WASTEWATER LINE
- EXISTING WASTEWATER MANHOLE
- PROPOSED WATER LINE
- EXISTING WATER LINE
- PROPOSED FIRE HYDRANT
- PROPOSED GATE VALVE
- EXISTING FIRE HYDRANT
- EXISTING GATE VALVE

NOTES:

1. **ALL INLET WYE CONNECTIONS TO BE 45 DEGREES UNLESS OTHERWISE NOTED.**
2. **CONTRACTOR TO BE AWARE OF OVERHEAD ELECTRIC LINES AND UNDERGROUND GAS LINES AT ALL TIMES.**
3. **ALL CONNECTIONS TO PRECAST STRUCTURES WILL BE THROUGH THE KNOCK OUT. ANY DAMAGES OUTSIDE THE KNOCK OUT WILL REQUIRE REPLACEMENT OF STRUCTURE.**
4. **ALL CONCRETE STORM PIPES ARE TO BE CLASS III UNLESS OTHERWISE SPECIFIED.**

FOR OFFICIAL USE ONLY

Reviewed for Substantial Conformance by City of Hutto

CITY OF HUTTO

Matt Reiter, P.E.
City Engineer
Engineering - City of Hutto

10/01/2024

8834 N. Capital of Texas Hwy.
Suite 140
Austin, Texas 78759
(512)452-0371
FAX(512)454-9933
TBPELS FIRM #2946

GRAY ENGINEERING

NO.	BY	DATE	REVISION DESCRIPTION

RECORD ONLY

LIDELL WALKER PHASE 2B

OVERALL STORM SEWER PLAN (2 OF 2)

PROJECT NO: 1725-11738

DESIGNED BY: ARS

DRAWN BY: ARS

CHECKED BY: TMH

NOTICE:
ALTERATION OF A SEALED DRAWING WITHOUT PROPER NOTIFICATION TO THE RESPONSIBLE ENGINEER IS A VIOLATION OF THE TEXAS ENGINEERING PRACTICE ACT.

STATE OF TEXAS
AUSTIN R. SEIFERT
137175
LICENSED
PROFESSIONAL ENGINEER
07/29/2024

LIDELL WALKER PHASE 2B

PROJECT NO: 2157-ENG

SHEET 17 OF 52

H:\PROJECTS\1725 - GRBK EDGEWOOD LLC\LIDELL WALKER PHASE 2B\CAD\SHEETS\11738-C-STRM-O.DWG DATE: 7/29/2024 9:23:31 AM BY: ASEIFERT

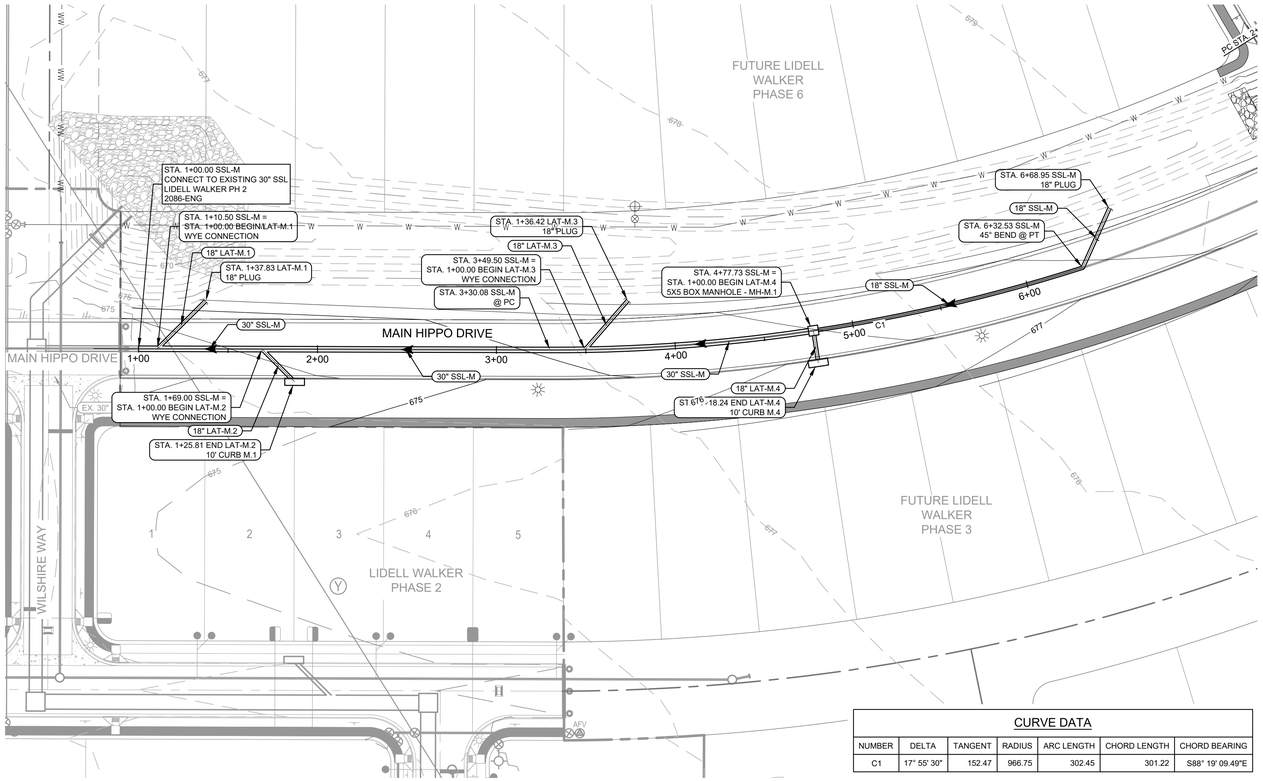

CURVE DATA						
NUMBER	DELTA	TANGENT	RADIUS	ARC LENGTH	CHORD LENGTH	CHORD BEARING
C1	17° 55' 30"	152.47	966.75	302.45	301.22	S88° 19' 09.49"E

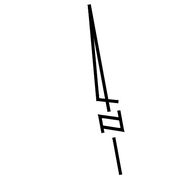

LEGEND	
	PROPERTY BOUNDARY
XXX	EXISTING MAJOR CONTOUR
XXX	EXISTING MINOR CONTOUR
XXX	PROPOSED MAJOR CONTOUR
XXX	PROPOSED MINOR CONTOUR
	FEMA FLOODPLAIN
	100 YEAR ENGINEERED FLOODPLAIN
	PROPOSED STORM SEWER LINE
	PROPOSED INLET
	PROPOSED BOX MANHOLE
	PROPOSED MANHOLE

NOTES:

1. **ALL INLET WYE CONNECTIONS TO BE 45 DEGREES UNLESS OTHERWISE NOTED.**
2. **CONTRACTOR TO BE AWARE OF OVERHEAD ELECTRIC LINES AND UNDERGROUND GAS LINES AT ALL TIMES.**
3. **ALL CONNECTIONS TO PRECAST STRUCTURES WILL BE THROUGH THE KNOCK OUT. ANY DAMAGES OUTSIDE THE KNOCK OUT WILL REQUIRE REPLACEMENT OF STRUCTURE.**

SSL-M

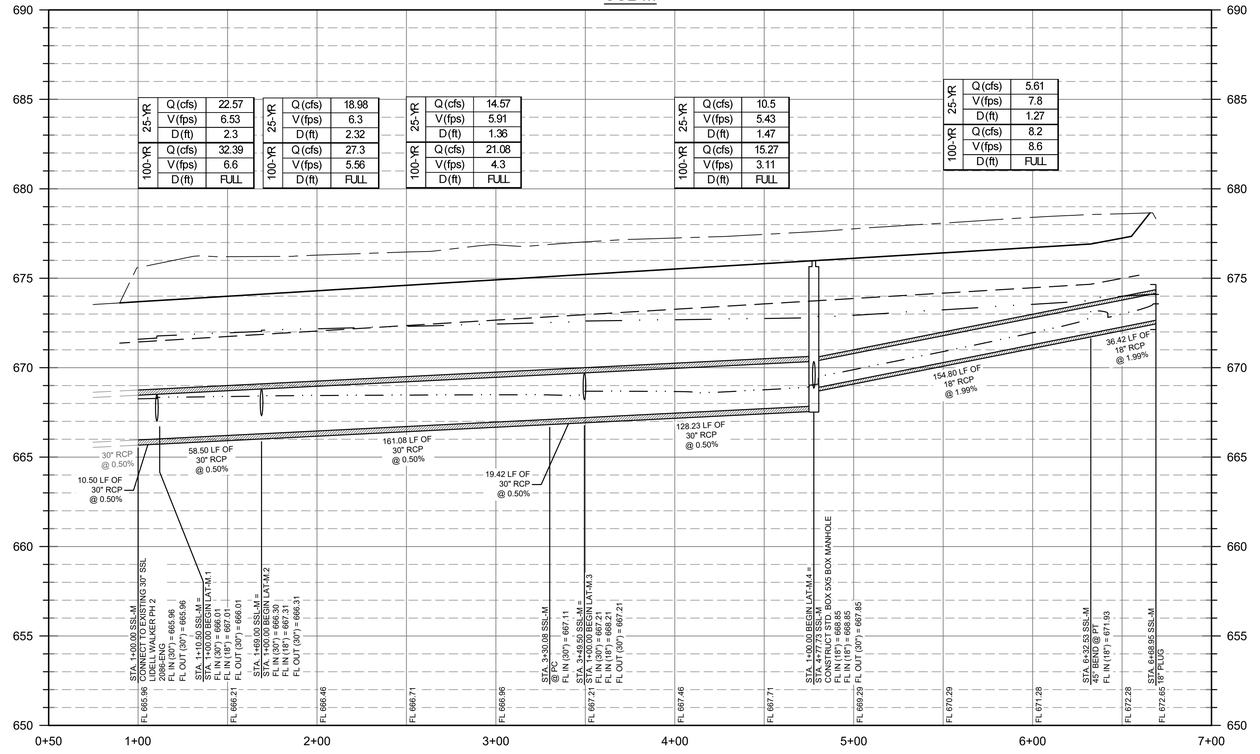

PROFILE LEGEND	
	PROPOSED GRADE
	PROPOSED SUBGRADE
	EXISTING GRADE
	25 YEAR HGL
	100 YEAR HGL
	PROPOSED STORM LINE
	PROPOSED STORM INLET
	PROPOSED JUNCTION BOX

8834 N. Capital of Texas Hwy.
Suite 140
Austin, Texas 78759
(512)452-0371
FAX(512)454-9933
TBPELS FIRM #2946
GRAY ENGINEERING

NO.	BY	DATE	REVISION DESCRIPTION
			RECORD ONLY

LIDELL WALKER PHASE 2B

SSL-M PLAN & PROFILE

PROJECT NO: 1725-11738

DESIGNED BY: ARS

DRAWN BY: ARS

CHECKED BY: TMH

NOTICE:
ALTERATION OF A SEALED DRAWING WITHOUT PROPER NOTIFICATION TO THE RESPONSIBLE ENGINEER IS A VIOLATION OF THE TEXAS ENGINEERING PRACTICE ACT.

FOR OFFICIAL USE ONLY

Reviewed for Substantial Conformance by City of Hutto

Matt Bechtol, P.E.
City Engineer
Engineering - City of Hutto

10/01/2024

STATE OF TEXAS
AUSTIN R. SEIFERT
137175
LICENSED
PROFESSIONAL ENGINEER
07/29/2024

SHEET 18 OF 52

PROJECT NO: 2157-ENG LIDELL WALKER PHASE 2B

H:\PROJECTS\1725 - GRBK EDGEWOOD LLC\LIDELL WALKER PHASE 2B\CAD\SHEETS\11738-C-STRM.DWG DATE: 7/29/2024 9:25:32 AM BY: ASEIFERT

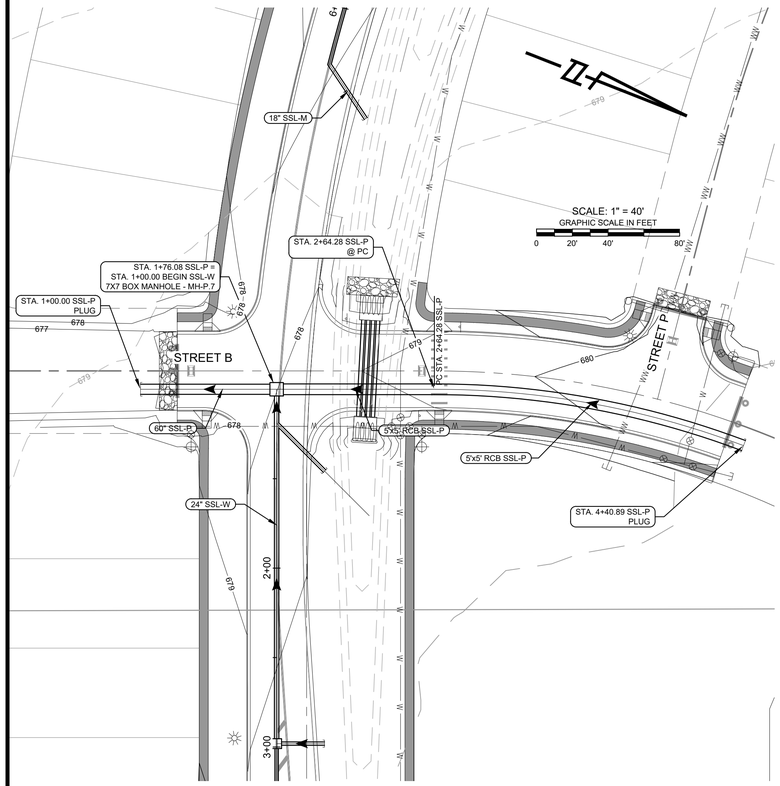

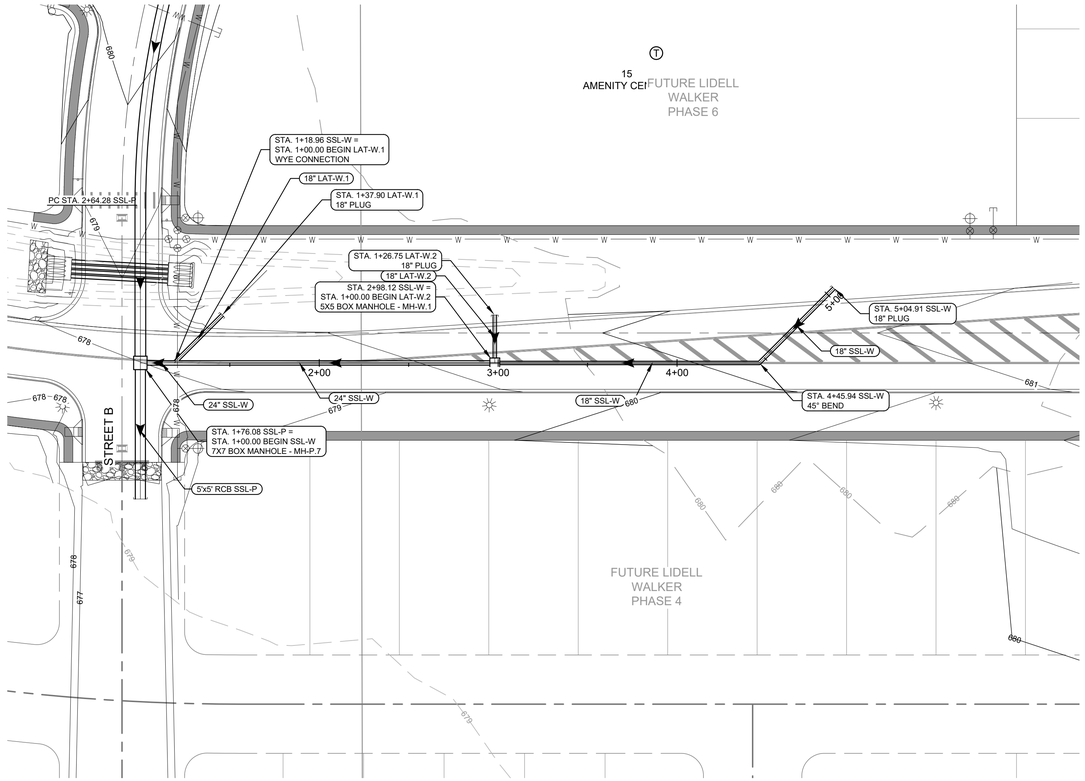

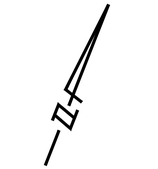

LEGEND

- PROPERTY BOUNDARY
- EXISTING MAJOR CONTOUR
- EXISTING MINOR CONTOUR
- PROPOSED MAJOR CONTOUR
- PROPOSED MINOR CONTOUR
- FEMA FLOODPLAIN
- 100 YEAR ENGINEERED FLOODPLAIN
- PROPOSED STORM SEWER LINE
- PROPOSED INLET
- PROPOSED BOX MANHOLE
- PROPOSED MANHOLE

NOTES:

1. **ALL INLET WYE CONNECTIONS TO BE 45 DEGREES UNLESS OTHERWISE NOTED.**
2. **CONTRACTOR TO BE AWARE OF OVERHEAD ELECTRIC LINES AND UNDERGROUND GAS LINES AT ALL TIMES.**
3. **ALL CONNECTIONS TO PRECAST STRUCTURES WILL BE THROUGH THE KNOCK OUT. ANY DAMAGES OUTSIDE THE KNOCK OUT WILL REQUIRE REPLACEMENT OF STRUCTURE.**

SSL-P

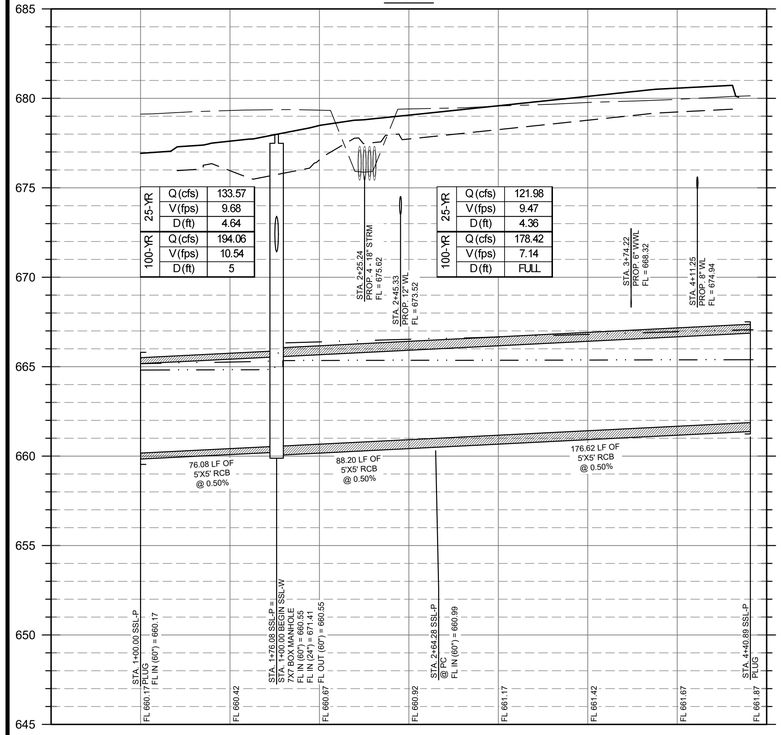

SSL-W

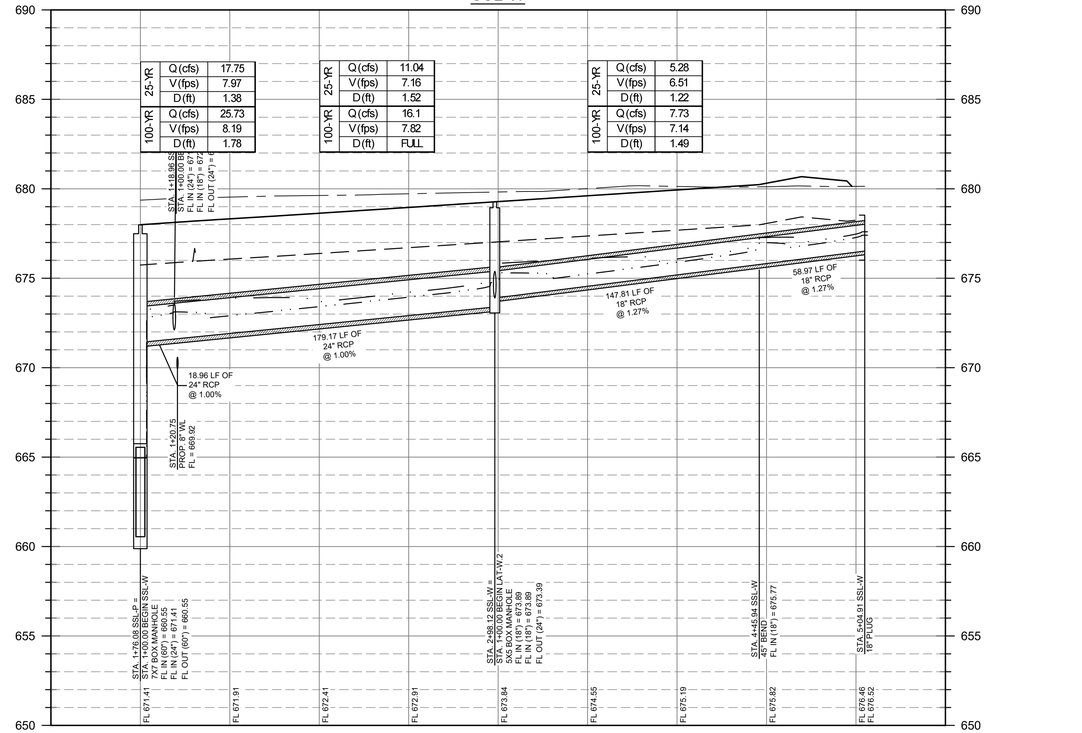

PROFILE LEGEND

- PROPOSED GRADE
- PROPOSED SUBGRADE
- EXISTING GRADE
- 25 YEAR HGL
- 100 YEAR HGL
- PROPOSED STORM LINE
- PROPOSED STORM INLET
- PROPOSED JUNCTION BOX

8834 N. Capital of Texas Hwy.
Suite 140
Austin, Texas 78759
(512)452-0371
FAX(512)454-9933
TBPELS FIRM #2946
GRAY ENGINEERING

NO.	BY	DATE	REVISION DESCRIPTION
			RECORD ONLY

LIDELL WALKER PHASE 2B

SSL-P & SSL-W PLAN & PROFILE

PROJECT NO: 1725-11738

DESIGNED BY: ARS

DRAWN BY: ARS

CHECKED BY: TMH

NOTICE:
ALTERATION OF A SEALED DRAWING WITHOUT PROPER NOTIFICATION TO THE RESPONSIBLE ENGINEER IS A VIOLATION OF THE TEXAS ENGINEERING PRACTICE ACT.



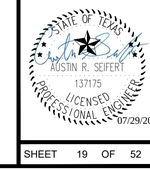

SHEET 19 OF 52

PROJECT NO: 2157-ENG LIDELL WALKER PHASE 2B

H:\PROJECTS\1725 - GRBK EDGEWOOD LLC\LIDELL WALKER PHASE 2B\CAD\SHEETS\11738-C-STRM.DWG DATE: 7/29/2024 9:26:22 AM BY: ASEIFERT

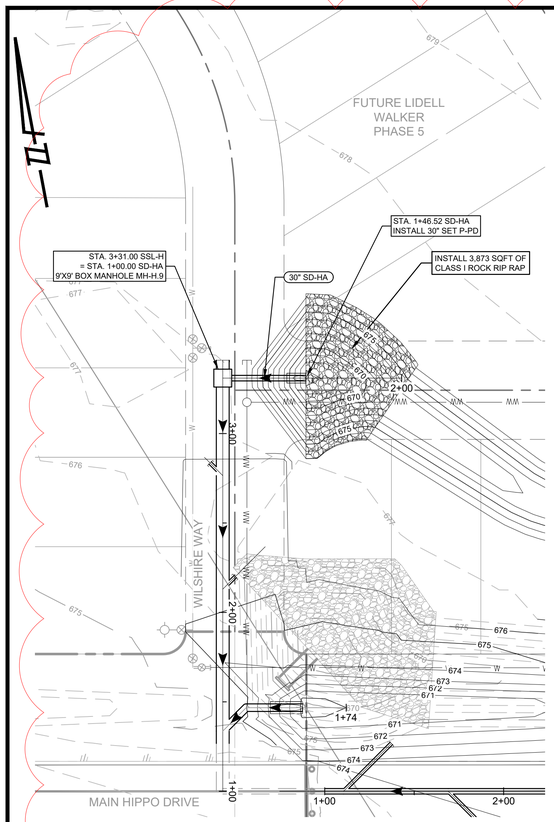

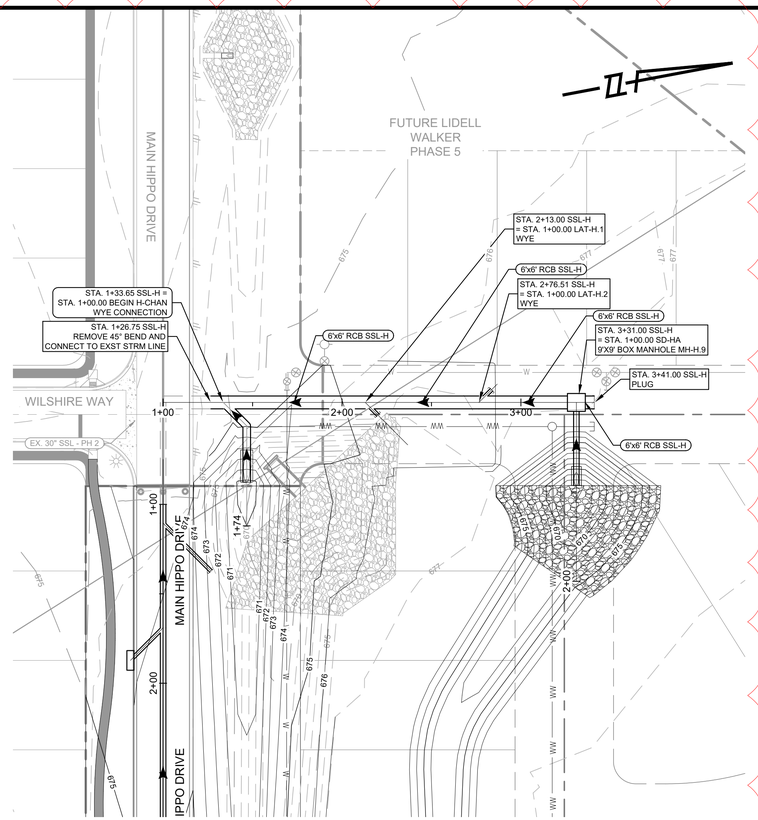

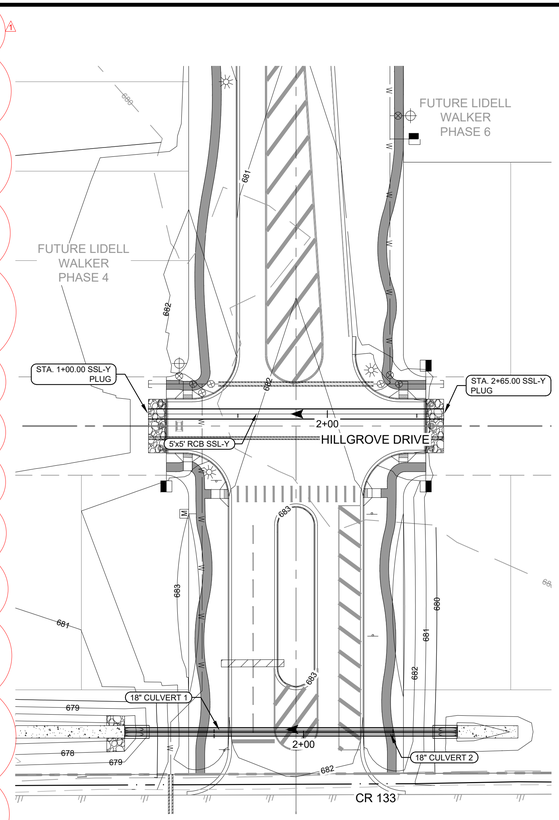



LEGEND	
	PROPERTY BOUNDARY
XXX	EXISTING MAJOR CONTOUR
XXX	EXISTING MINOR CONTOUR
XXX	PROPOSED MAJOR CONTOUR
XXX	PROPOSED MINOR CONTOUR
	FEMA FLOODPLAIN
	100 YEAR ENGINEERED FLOODPLAIN
	PROPOSED STORM SEWER LINE
	PROPOSED INLET
	PROPOSED BOX MANHOLE
	PROPOSED MANHOLE

NOTES:

1. **ALL INLET WYE CONNECTIONS TO BE 45 DEGREES UNLESS OTHERWISE NOTED.**
2. **CONTRACTOR TO BE AWARE OF OVERHEAD ELECTRIC LINES AND UNDERGROUND GAS LINES AT ALL TIMES.**
3. **ALL CONNECTIONS TO PRECAST STRUCTURES WILL BE THROUGH THE KNOCK OUT. ANY DAMAGES OUTSIDE THE KNOCK OUT WILL REQUIRE REPLACEMENT OF STRUCTURE.**

SD-HA

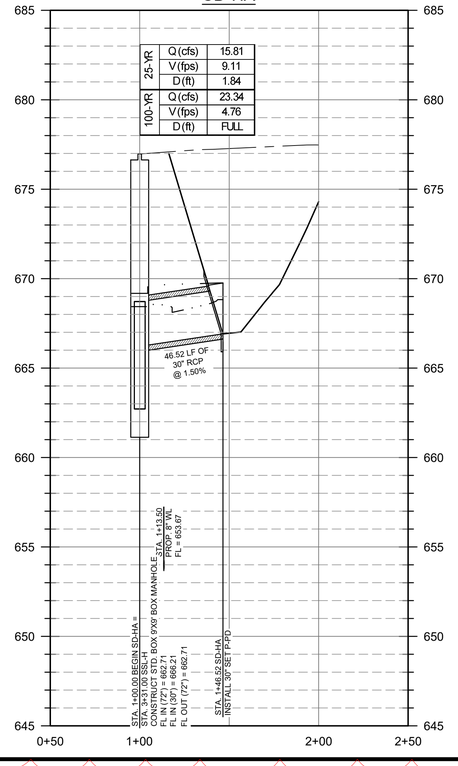

SSL-H

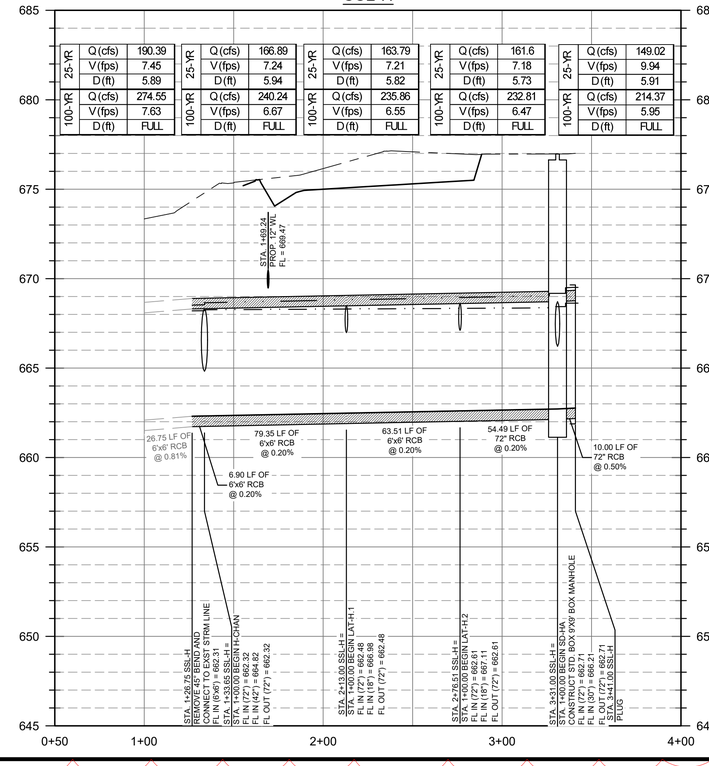

SSL-Y

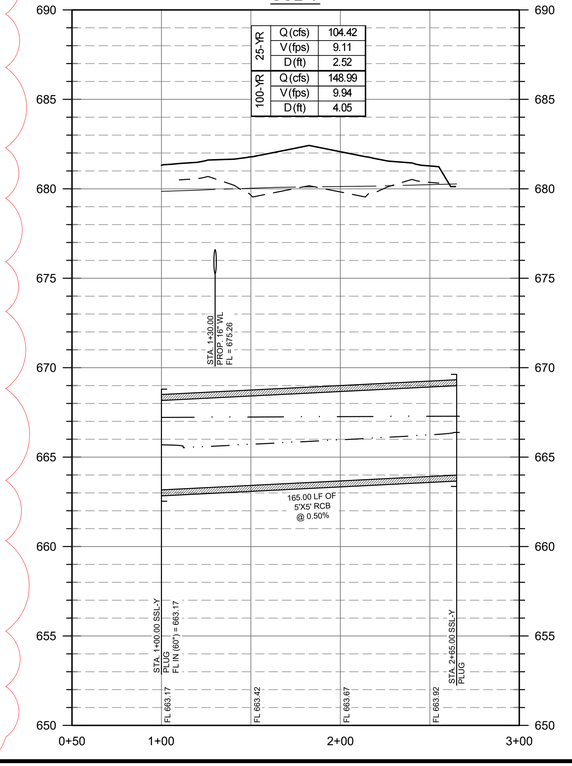

PROFILE LEGEND	
	PROPOSED GRADE
	PROPOSED SUBGRADE
	EXISTING GRADE
	25 YEAR HGL
	100 YEAR HGL
	PROPOSED STORM LINE
	PROPOSED STORM INLET
	PROPOSED JUNCTION BOX

8834 N. Capital of Texas Hwy.
Suite 140
Austin, Texas 78759
(512)452-0371
FAX(512)454-9933
TBPELS FIRM #2946
GRAY ENGINEERING

NO.	BY	DATE	REVISION DESCRIPTION
1		07/22/25	ADDED STORM SEWER LINES SSL-H AND SD-HA

RECORD ONLY

LIDELL WALKER PHASE 2B

SSL-Y & SSL-H & SD-HA PLAN & PROFILE

PROJECT NO: 1725-11738

DESIGNED BY: ARS

DRAWN BY: ARS

CHECKED BY: TMH

NOTICE:
ALTERATION OF A SEALED DRAWING WITHOUT PROPER NOTIFICATION TO THE RESPONSIBLE ENGINEER IS A VIOLATION OF THE TEXAS ENGINEERING PRACTICE ACT.

Reviewed for Substantial Conformance by City of Hutto
FOR OFFICIAL USE ONLY
Matt Bartoi, P.E.
City Engineer
Engineering - City of Hutto
09/26/2025

STATE OF TEXAS
AUSTIN R. SEIFERT
137175
LICENSED
PROFESSIONAL ENGINEER
07/23/2025

SHEET 20 OF 52

PROJECT NO: 2157-ENG

LIDELL WALKER PHASE 2B

H:\PROJECTS\1725 - GRBK EDGEWOOD LLC\LIDELL WALKER PHASE 2B\CAD\SHEETS\11738-C-STRM.DWG DATE: 7/23/2025 1:12:20 PM, BY: ASEIFERT

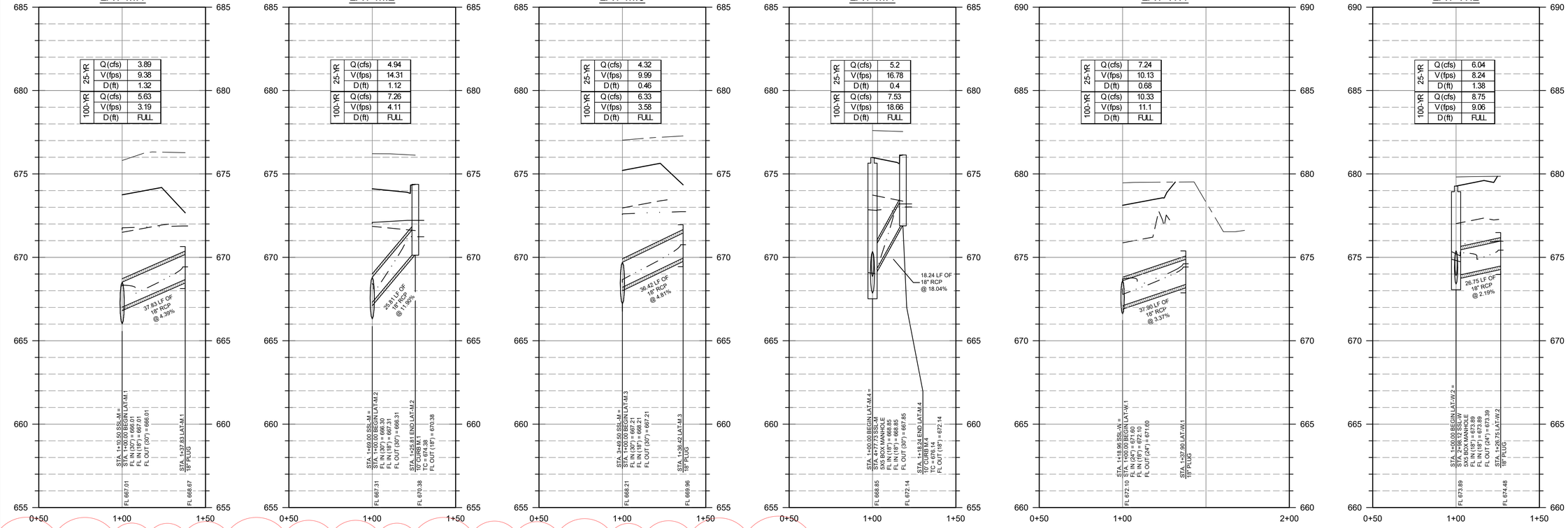

8834 N. Capital of Texas Hwy.
Suite 140
Austin, Texas 78759
(512)452-0371
FAX(512)454-9933
TBPELS FIRM #2946
GRAY ENGINEERING

NO.	BY	DATE	REVISION DESCRIPTION
1		07/22/25	ADDED STORM SEWER LATERALS

RECORD ONLY

LIDELL WALKER PHASE 2B

STORM SEWER LATERALS

PROJECT NO: 1725-11738

DESIGNED BY: ARS

DRAWN BY: ARS

CHECKED BY: TMH

NOTICE:
ALTERATION OF A SEALED DRAWING WITHOUT PROPER NOTIFICATION TO THE RESPONSIBLE ENGINEER IS A VIOLATION OF THE TEXAS ENGINEERING PRACTICE ACT.

Reviewed for Substantial Conformance by City of Hutto
FOR OFFICIAL USE ONLY
Matt Rector, P.E.
City Engineer
Engineering - City of Hutto
09/26/2025

STATE OF TEXAS
AUSTIN R. SEIFERT
137175
LICENSED PROFESSIONAL ENGINEER
07/23/2025

SHEET 21 OF 52

H:\PROJECTS\1725 - GRBK EDGEWOOD LLC\LIDELL WALKER PHASE 2B\CAD\SHEETS\11738-C-STRM.DWG DATE: 7/23/2025 1:12:30 PM, BY: ASEIFERT

LIDELL WALKER PHASE 2B

PROJECT NO: 2157-ENG

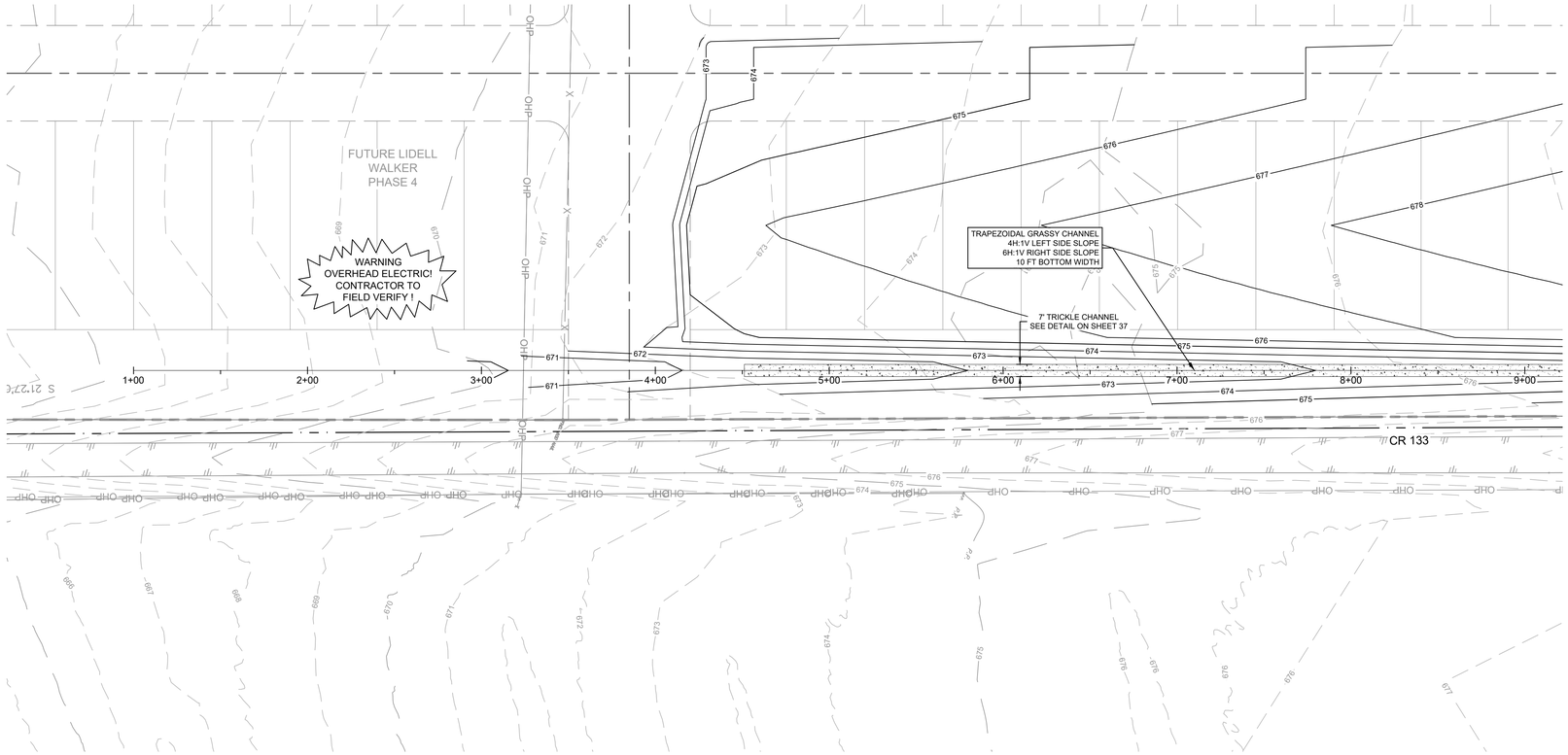

SCALE: 1" = 40'
GRAPHIC SCALE IN FEET
0 20' 40' 81'

LEGEND	
	PROPERTY BOUNDARY
XXX	EXISTING MAJOR CONTOUR
XXX	EXISTING MINOR CONTOUR
XXX	PROPOSED MAJOR CONTOUR
XXX	PROPOSED MINOR CONTOUR
	FEMA FLOODPLAIN
	100 YEAR ENGINEERED FLOODPLAIN
	PROPOSED STORM SEWER LINE
	PROPOSED INLET
	PROPOSED BOX MANHOLE
	PROPOSED MANHOLE

NOTES:
1. **ALL INLET WYE CONNECTIONS TO BE 45 DEGREES UNLESS OTHERWISE NOTED.**
2. **CONTRACTOR TO BE AWARE OF OVERHEAD ELECTRIC LINES AND UNDERGROUND GAS LINES AT ALL TIMES.**
3. **ALL CONNECTIONS TO PRECAST STRUCTURES WILL BE THROUGH THE KNOCK OUT. ANY DAMAGES OUTSIDE THE KNOCK OUT WILL REQUIRE REPLACEMENT OF STRUCTURE.**

CHANNEL A

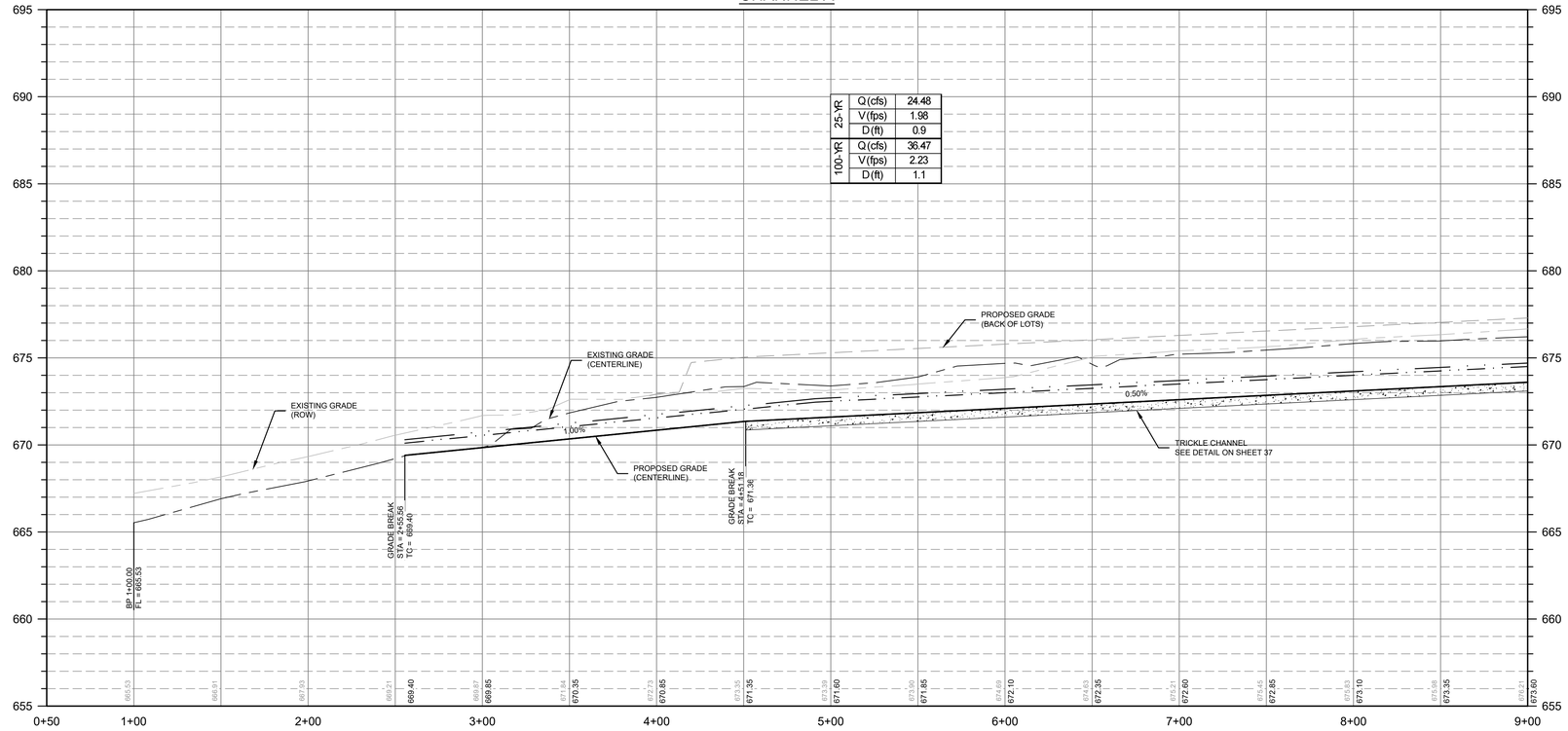

PROFILE LEGEND	
	PROPOSED GRADE
	PROPOSED SUBGRADE
	EXISTING GRADE
	25 YEAR HGL
	100 YEAR HGL
	PROPOSED STORM LINE
	PROPOSED STORM INLET
	PROPOSED JUNCTION BOX

FOR OFFICIAL USE ONLY
Reviewed for Substantial Conformance by City of Hutto
Matt Rector, P.E.
City Engineer
Engineering - City of Hutto
10/01/2024

8834 N. Capital of Texas Hwy.
Suite 140
Austin, Texas 78759
(512)452-0371
FAX(512)454-9933
TBPELS FIRM #2946
GRAY ENGINEERING

NO.	BY	DATE	REVISION DESCRIPTION
			RECORD ONLY

LIDELL WALKER PHASE 2B

CHANNEL-A PLAN & PROFILE
(1+00 TO 9+00)

PROJECT NO: 1725-11738
DESIGNED BY: ARS
DRAWN BY: ARS
CHECKED BY: TMH

NOTICE:
ALTERATION OF A SEALED DRAWING WITHOUT PROPER NOTIFICATION TO THE RESPONSIBLE ENGINEER IS A VIOLATION OF THE TEXAS ENGINEERING PRACTICE ACT.

STATE OF TEXAS
AUSTIN R. SEIFERT
137175
LICENSED
PROFESSIONAL ENGINEER
07/29/2024

PROJECT NO: 2157-ENG
LIDELL WALKER PHASE 2B

H:\PROJECTS\1725 - GRBK EDGEWOOD LLC\LIDELL WALKER PHASE 2B\CAD\SHEETS\11738-C-CHAN.DWG DATE: 7/29/2024 9:29:08 AM BY: ASEIFERT

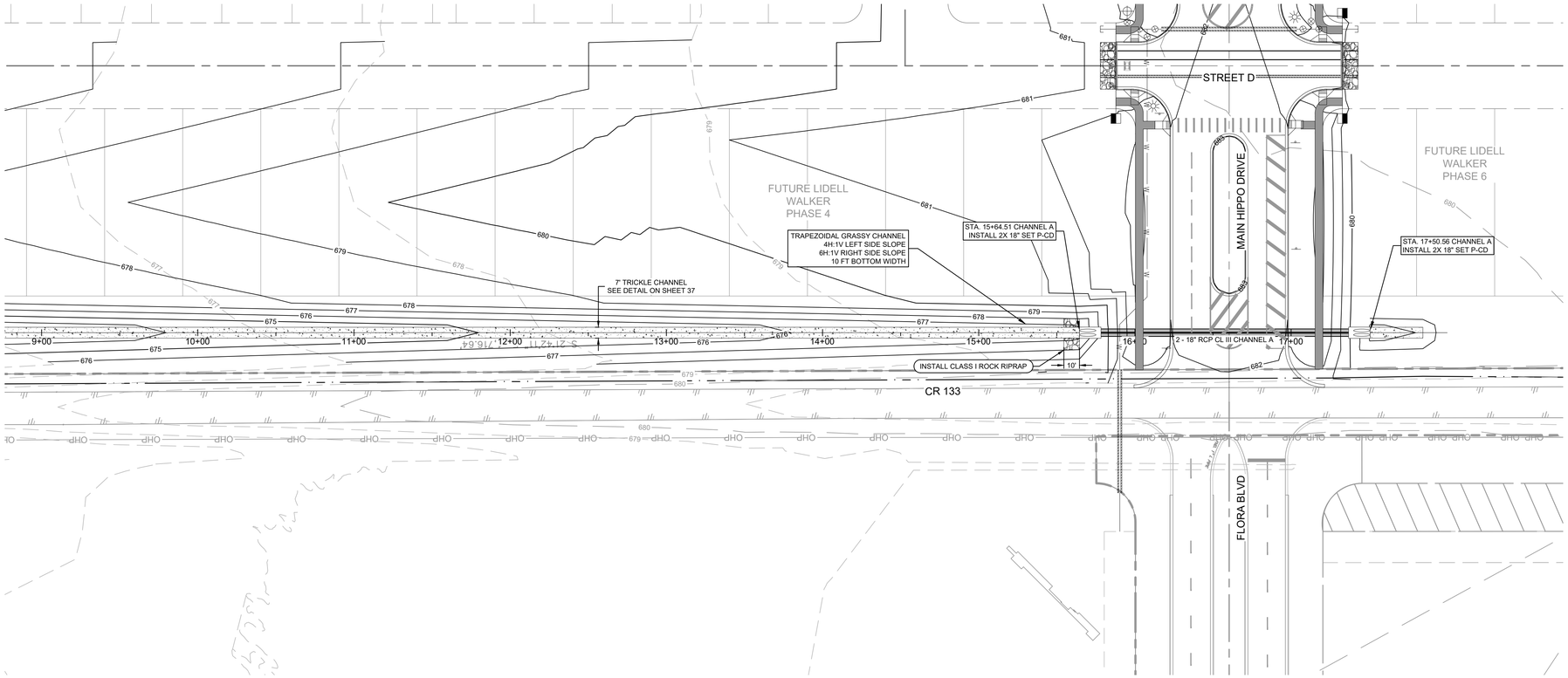



SCALE: 1" = 40'
GRAPHIC SCALE IN FEET
0 20' 40' 80'

LEGEND	
	PROPERTY BOUNDARY
XXX	EXISTING MAJOR CONTOUR
XXX	EXISTING MINOR CONTOUR
XXX	PROPOSED MAJOR CONTOUR
XXX	PROPOSED MINOR CONTOUR
	FEMA FLOODPLAIN
	100 YEAR ENGINEERED FLOODPLAIN
	PROPOSED STORM SEWER LINE
	PROPOSED INLET
	PROPOSED BOX MANHOLE
	PROPOSED MANHOLE

NOTES:

1. **ALL INLET WYE CONNECTIONS TO BE 45 DEGREES UNLESS OTHERWISE NOTED.**
2. **CONTRACTOR TO BE AWARE OF OVERHEAD ELECTRIC LINES AND UNDERGROUND GAS LINES AT ALL TIMES.**
3. **ALL CONNECTIONS TO PRECAST STRUCTURES WILL BE THROUGH THE KNOCK OUT. ANY DAMAGES OUTSIDE THE KNOCK OUT WILL REQUIRE REPLACEMENT OF STRUCTURE.**

CHANNEL A

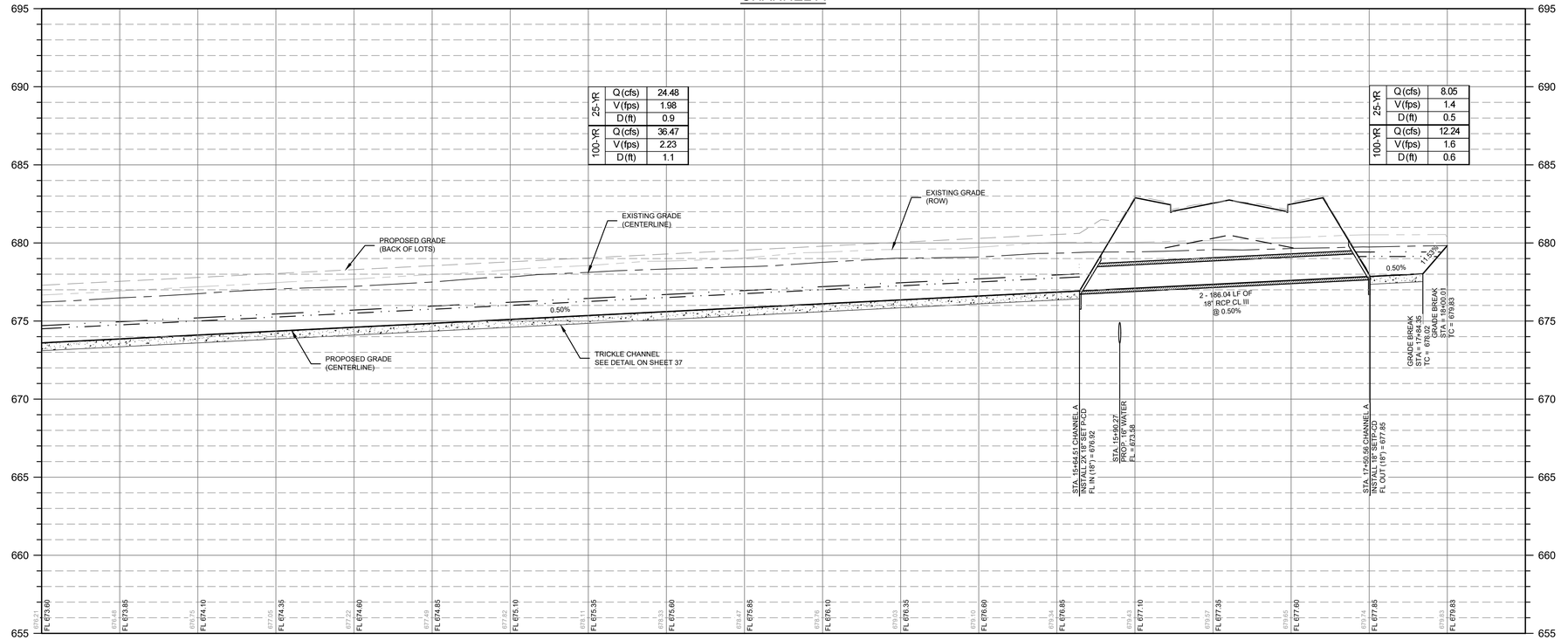

PROFILE LEGEND	
	PROPOSED GRADE
	PROPOSED SUBGRADE
	EXISTING GRADE
	25 YEAR HGL
	100 YEAR HGL
	PROPOSED STORM LINE
	PROPOSED STORM INLET
	PROPOSED JUNCTION BOX

8834 N. Capital of Texas Hwy.
Suite 140
Austin, Texas 78759
(512)452-0371
FAX(512)454-9933
TBPELS FIRM #2946

GRAY ENGINEERING

NO.	BY	DATE	REVISION DESCRIPTION
			RECORD ONLY

LIDELL WALKER PHASE 2B

CHANNEL-A PLAN & PROFILE
(9+00 TO END)

PROJECT NO: 1725-11738
DESIGNED BY: ARS
DRAWN BY: ARS
CHECKED BY: TMH

NOTICE:
ALTERATION OF A SEALED DRAWING WITHOUT PROPER NOTIFICATION TO THE RESPONSIBLE ENGINEER IS A VIOLATION OF THE TEXAS ENGINEERING PRACTICE ACT.

FOR OFFICIAL USE ONLY
Reviewed for Substantial Conformance by City of Hutto
CITY OF HUTTO
Matt Rector, P.E.
City Engineer
Engineering - City of Hutto
10/01/2024

STATE OF TEXAS
AUSTIN R. SEIFERT
137175
LICENSED PROFESSIONAL ENGINEER
07/29/2024

SHEET 23 OF 52

LIDELL WALKER PHASE 2B
PROJECT NO: 2157-ENG

H:\PROJECTS\1725 - GRBK EDGEWOOD LLC\LIDELL WALKER PHASE 2B\CAD\SHEETS\11738-C-CHAN.DWG DATE: 7/29/2024 9:29:34 AM BY: ASEIFERT

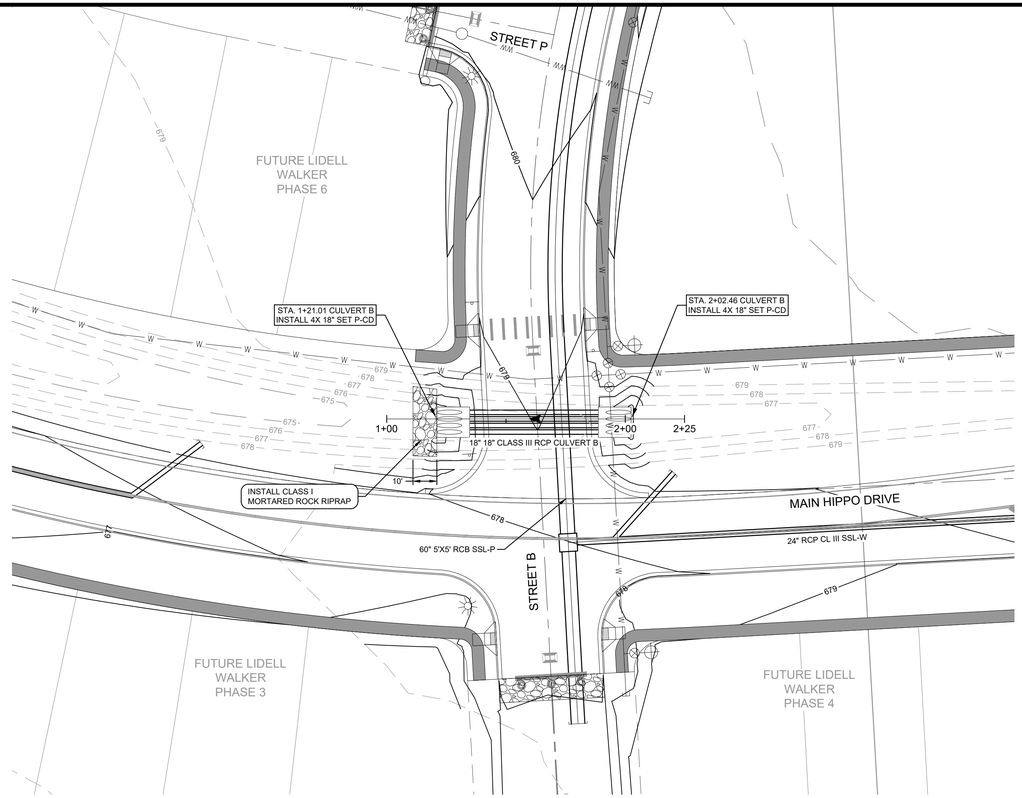

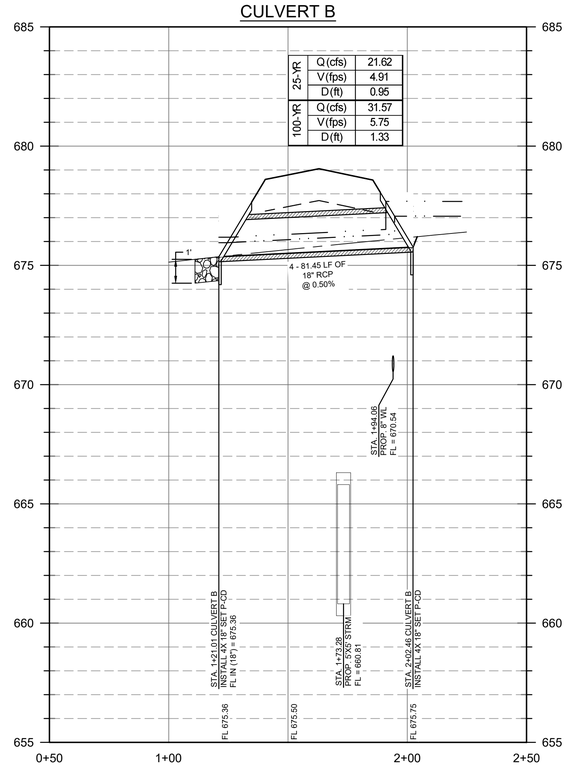



SCALE: 1" = 20'
GRAPHIC SCALE IN FEET
0 10' 20' 40'

LEGEND	
	PROPERTY BOUNDARY
XXX	EXISTING MAJOR CONTOUR
XXX	EXISTING MINOR CONTOUR
XXX	PROPOSED MAJOR CONTOUR
XXX	PROPOSED MINOR CONTOUR
	FEMA FLOODPLAIN
	100 YEAR ENGINEERED FLOODPLAIN
	PROPOSED STORM SEWER LINE
	PROPOSED INLET
	PROPOSED BOX MANHOLE
	PROPOSED MANHOLE

NOTES:
1. **ALL INLET WYE CONNECTIONS TO BE 45 DEGREES UNLESS OTHERWISE NOTED.**
2. **CONTRACTOR TO BE AWARE OF OVERHEAD ELECTRIC LINES AND UNDERGROUND GAS LINES AT ALL TIMES.**
3. **ALL CONNECTIONS TO PRECAST STRUCTURES WILL BE THROUGH THE KNOCK OUT. ANY DAMAGES OUTSIDE THE KNOCK OUT WILL REQUIRE REPLACEMENT OF STRUCTURE.**

PROFILE LEGEND	
	PROPOSED GRADE
	PROPOSED SUBGRADE
	EXISTING GRADE
	25 YEAR HGL
	100 YEAR HGL
	PROPOSED STORM LINE
	PROPOSED STORM INLET
	PROPOSED JUNCTION BOX

FOR OFFICIAL USE ONLY

Reviewed for Substantial Conformance by City of Hutto

CITY OF HUTTO

Matt Rector, P.E.
City Engineer
Engineering - City of Hutto

10/01/2024

8834 N. Capital of Texas Hwy.
Suite 140
Austin, Texas 78759
(512)452-0371
FAX(512)454-9933
TBPELS FIRM #2946

GRAY ENGINEERING

NO.	BY	DATE	REVISION DESCRIPTION

RECORD ONLY

LIDELL WALKER PHASE 2B

CULVERT B PLAN & PROFILE
(1+00 TO END)

PROJECT NO: 1725-11738

DESIGNED BY: ARS

DRAWN BY: ARS

CHECKED BY: TMH

NOTICE:
ALTERATION OF A SEALED DRAWING WITHOUT PROPER NOTIFICATION TO THE RESPONSIBLE ENGINEER IS A VIOLATION OF THE TEXAS ENGINEERING PRACTICE ACT.

STATE OF TEXAS
AUSTIN R. SEIFERT
137175
LICENSED PROFESSIONAL ENGINEER
07/29/2024

SHEET 24 OF 52

PROJECT NO: 2157-ENG

LIDELL WALKER PHASE 2B

H:\PROJECTS\1725 - GRBK EDGEWOOD LLC\LIDELL WALKER PHASE 2B\CAD\SHEETS\11738-C-CHAN.DWG DATE: 7/29/2024 9:30:02 AM BY: ASEIFERT

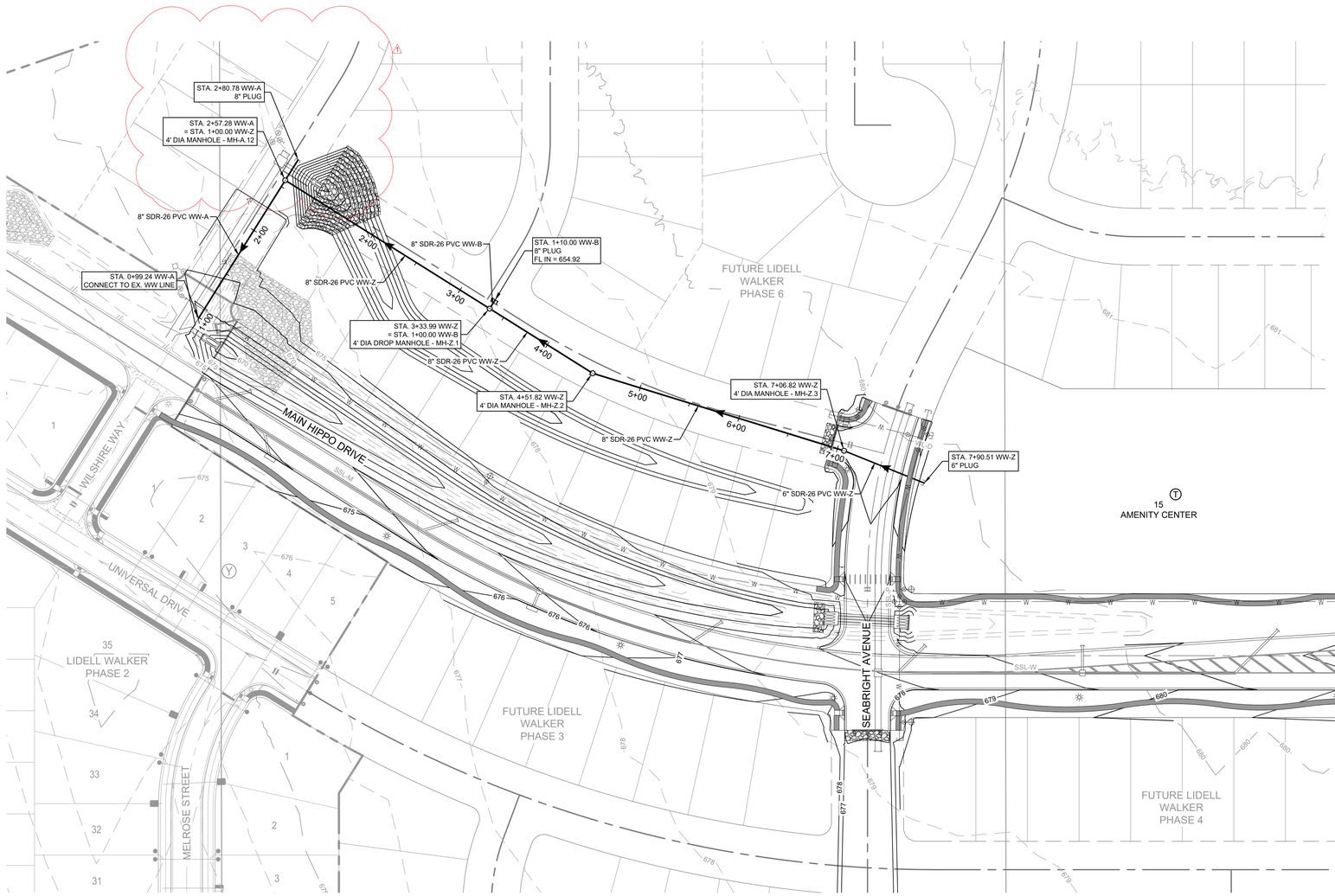

LEGEND

	PROPERTY BOUNDARY
XXX	EXISTING MAJOR CONTOUR
XXX	EXISTING MINOR CONTOUR
XXX	PROPOSED MAJOR CONTOUR
XXX	PROPOSED MINOR CONTOUR
	PROPOSED WASTEWATER LINE
	PROPOSED WASTEWATER MANHOLE
	PROPOSED PLUG
	PROPOSED WASTEWATER SERVICE
	EXISTING WASTEWATER LINE
	EXISTING WASTEWATER MANHOLE
	EXISTING WASTEWATER SERVICE
	PROPOSED WATER LINE
	EXISTING WATER LINE
	PROPOSED FIRE HYDRANT
	PROPOSED GATE VALVE
	PROPOSED WATER SERVICE
	EXISTING FIRE HYDRANT
	EXISTING GATE VALVE
	EXISTING WATER SERVICE
	PROPOSED STORM SEWER LINE
	PROPOSED INLET
	PROPOSED BOX MANHOLE
	PROPOSED MANHOLE
SD	EXISTING STORM SEWER LINE
	EXISTING INLET
	EXISTING BOX MANHOLE
	EXISTING MANHOLE

SCALE: 1" = 60'
GRAPHIC SCALE IN FEET
0 30' 60' 120'

8834 N. Capital of Texas Hwy.
Suite 140
Austin, Texas 78759
(512)452-0371
FAX(512)454-9933
TBPELS FIRM #2946
GRAY ENGINEERING

NO.	BY	DATE	REVISION DESCRIPTION
1		07/22/25	EXTEND WW-A

RECORD ONLY

LIDELL WALKER PHASE 2B

OVERALL WASTEWATER COLLECTION PLAN

PROJECT NO: 1725-11738
DESIGNED BY: ARS
DRAWN BY: ARS
CHECKED BY: TMH

NOTICE:
ALTERATION OF A SEALED DRAWING WITHOUT PROPER NOTIFICATION TO THE RESPONSIBLE ENGINEER IS A VIOLATION OF THE TEXAS ENGINEERING PRACTICE ACT.

Reviewed for Substantial Conformance by City of Hutto
Matt Bailey, P.E.
City Engineer
Engineering - City of Hutto
09/26/2025

STATE OF TEXAS
AUSTIN R. SEIFERT
137175
LICENSED
PROFESSIONAL ENGINEER
07/23/2025

SHEET 25 OF 52

PROJECT NO: 2157-ENG LIDELL WALKER PHASE 2B

H:\PROJECTS\1725 - GRBK EDGEWOOD LLC\LIDELL WALKER PHASE 2B\CADSHEETS\11738-C-SSWR-O.DWG DATE: 7/23/2025 1:15:09 PM BY: ASEIFERT

SCALE: 1" = 40'
GRAPHIC SCALE IN FEET
0 20' 40' 80'

LEGEND	
	PROPERTY BOUNDARY
XXX	EXISTING MAJOR CONTOUR
XXX	EXISTING MINOR CONTOUR
XXX	PROPOSED MAJOR CONTOUR
XXX	PROPOSED MINOR CONTOUR
	PROPOSED WASTEWATER LINE
	PROPOSED WASTEWATER MANHOLE
	PROPOSED PLUG
	DOUBLE WASTEWATER SERVICE
	SINGLE WASTEWATER SERVICE
	DOUBLE WATER SERVICE
	SINGLE WATER SERVICE

NOTES:
1.

PROFILE LEGEND	
	PROPOSED GRADE
	PROPOSED SUBGRADE
	EXISTING GRADE
	PROPOSED WASTEWATER LINE
	PROPOSED WW MANHOLE

8834 N. Capital of Texas Hwy.
Suite 140
Austin, Texas 78759
(512)452-0371
FAX(512)454-9933
TBPELS FIRM #2946
GRAY ENGINEERING

NO.	BY	DATE	REVISION DESCRIPTION
1		07/22/25	EXTEND WW-A

RECORD ONLY

LIDELL WALKER PHASE 2B

WW-A PLAN & PROFILE
(1+00 TO END)

PROJECT NO: 1725-11738
DESIGNED BY: ARS
DRAWN BY: ARS
CHECKED BY: TMH

NOTICE:
ALTERATION OF A SEALED DRAWING WITHOUT PROPER NOTIFICATION TO THE RESPONSIBLE ENGINEER IS A VIOLATION OF THE TEXAS ENGINEERING PRACTICE ACT.

FOR OFFICIAL USE ONLY
Reviewed for Substantial Conformance by City of Hutto
Matt Rector, P.E.
City Engineer
Engineering - City of Hutto
09/26/2025

STATE OF TEXAS
AUSTIN R. SEIFERT
137175
LICENSED
PROFESSIONAL ENGINEER
07/23/2025

SHEET 26 OF 52

PROJECT NO: 2157-ENG LIDELL WALKER PHASE 2B

H:\PROJECTS\1725 - GRBK EDGEWOOD LLC\LIDELL WALKER PHASE 2B\CADD\SHEETS\11738-C-SSWR.DWG DATE: 7/23/2025 1:16:07 PM BY: ASEIFERT

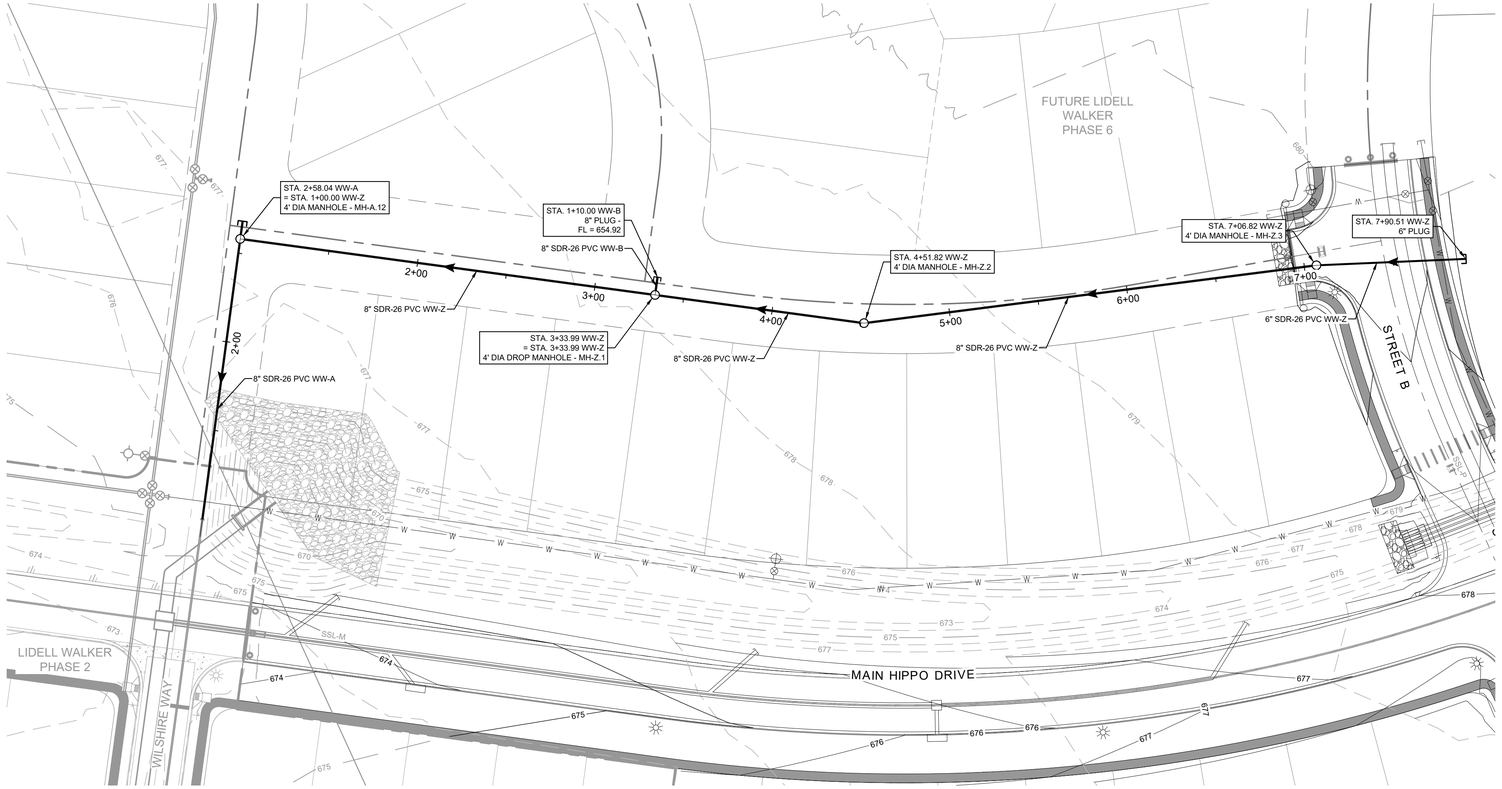

SCALE: 1" = 40'
GRAPHIC SCALE IN FEET
0 20' 40' 80'

LEGEND	
	PROPERTY BOUNDARY
XXX	EXISTING MAJOR CONTOUR
XXX	EXISTING MINOR CONTOUR
XXX	PROPOSED MAJOR CONTOUR
XXX	PROPOSED MINOR CONTOUR
	PROPOSED WASTEWATER LINE
	PROPOSED WASTEWATER MANHOLE
	PROPOSED PLUG
	DOUBLE WASTEWATER SERVICE
	SINGLE WASTEWATER SERVICE
	DOUBLE WATER SERVICE
	SINGLE WATER SERVICE

NOTES:
1.

WW-Z

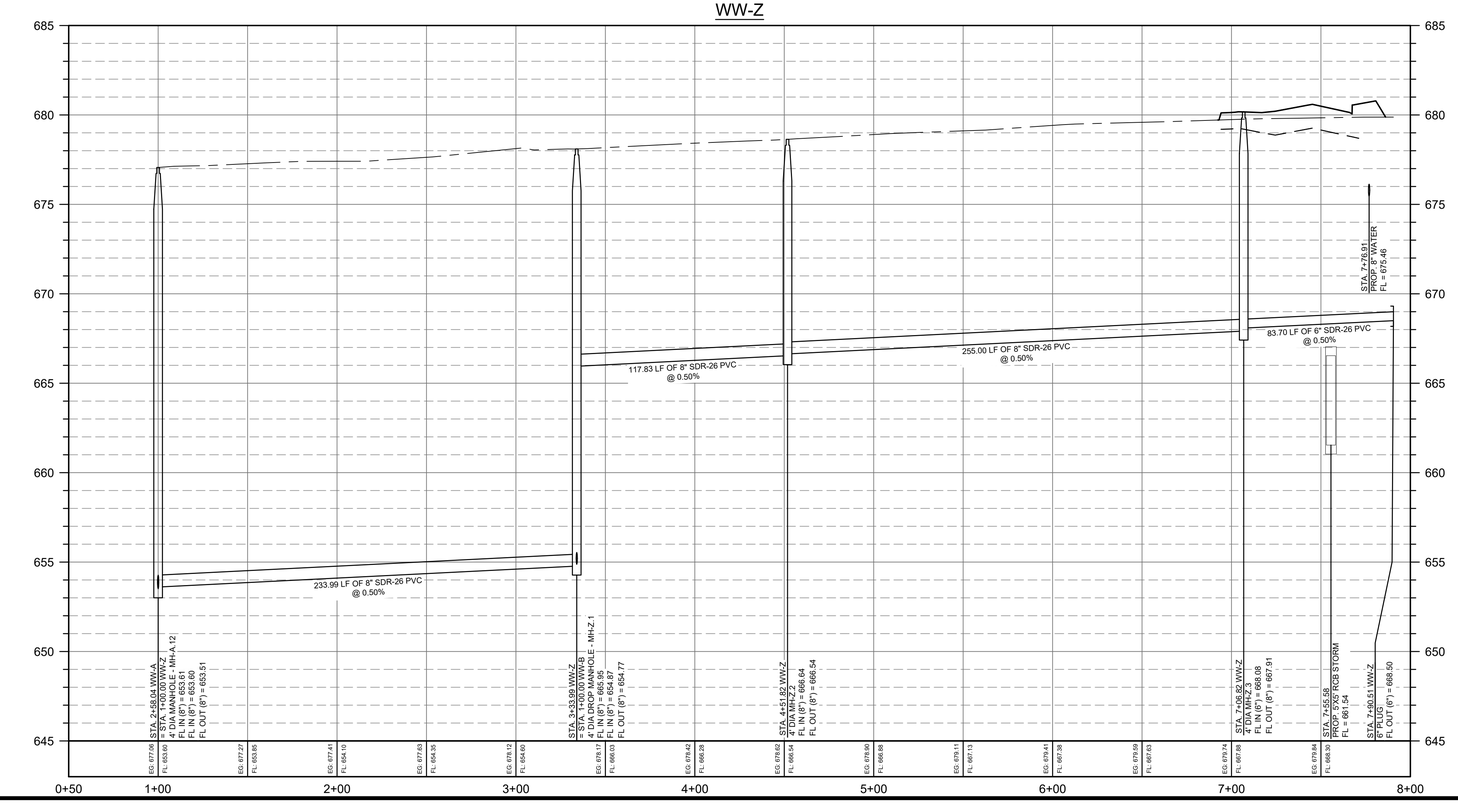

PROFILE LEGEND	
	PROPOSED GRADE
	PROPOSED SUBGRADE
	EXISTING GRADE
	PROPOSED WASTEWATER LINE
	PROPOSED WW MANHOLE

8834 N. Capital of Texas Hwy.
Suite 140
Austin, Texas 78759
(512)452-0371
FAX(512)454-9933
TBPELS FIRM #2946

GRAY ENGINEERING

NO.	BY	DATE	REVISION DESCRIPTION
			RECORD ONLY

LIDELL WALKER PHASE 2B

WW-Z PLAN & PROFILE
(1+00 TO END)

PROJECT NO: 1725-11738

DESIGNED BY: ARS

DRAWN BY: ARS

CHECKED BY: TMH

NOTICE:
ALTERATION OF A SEALED DRAWING WITHOUT PROPER NOTIFICATION TO THE RESPONSIBLE ENGINEER IS A VIOLATION OF THE TEXAS ENGINEERING PRACTICE ACT.

FOR OFFICIAL USE ONLY
Reviewed for Substantial Conformance by City of Hutto
HUTTO
Matt Rector, P.E.
City Engineer
Engineering - City of Hutto
10/01/2024

STATE OF TEXAS
AUSTIN R. SEIFERT
137175
LICENSED PROFESSIONAL ENGINEER
07/29/2024

SHEET 27 OF 52

PROJECT NO: 2157-ENG LIDELL WALKER PHASE 2B

H:\PROJECTS\1725 - GR\BK EDGEWOOD LLC\LIDELL WALKER PHASE 2B\CADSHEETS\11738-C-SSWR.DWG DATE: 7/29/2024 8:33:31 AM BY: MCARTER

SCALE: 1" = 60'
GRAPHIC SCALE IN FEET
0 30' 60' 120'

LEGEND

- PROPERTY BOUNDARY
- EXISTING MAJOR CONTOUR
- EXISTING MINOR CONTOUR
- PROPOSED MAJOR CONTOUR
- PROPOSED MINOR CONTOUR
- PROPOSED WATER LINE
- EXISTING WATER LINE
- PROPOSED FIRE HYDRANT
- PROPOSED GATE VALVE
- PROPOSED WATER SERVICE
- PROPOSED PLUG
- EXISTING FIRE HYDRANT
- EXISTING GATE VALVE
- EXISTING WATER SERVICE
- PROPOSED WASTEWATER LINE
- PROPOSED WASTEWATER MANHOLE
- PROPOSED PLUG
- PROPOSED WASTEWATER SERVICE
- EXISTING WASTEWATER LINE
- EXISTING WASTEWATER MANHOLE
- EXISTING WASTEWATER SERVICE
- PROPOSED STORM SEWER LINE
- PROPOSED INLET
- PROPOSED BOX MANHOLE
- PROPOSED MANHOLE
- EXISTING STORM SEWER LINE
- EXISTING INLET
- EXISTING BOX MANHOLE
- EXISTING MANHOLE

NOTES:

1. **ALL WATER SYMBOLS ARE NOT TO SCALE AND ARE ONLY SHOWN FOR ILLUSTRATION PURPOSES. ALL WATER APPURTENANCES SHALL BE INSTALLED PER STANDARD DETAILS PROVIDED IN THE PLAN SET. CONTRACTOR TO PLACE ALL WATER APPURTENANCES AWAY FROM CURBS, VALLEY GUTTERS, AND DRIVEWAYS.**

STA. 1+00.00 WL-C
REMOVE PLUG
CONNECT TO EX. WL

12" C900 DR-14 WL-C

STA. 4+40.92 WL-C
FIRE HYDRANT ASSEMBLY

STA. 4+84.92 WL-C
11.25° HORIZ. BEND

12" C900 DR-14 WL-C

STA. 6+54.56 WL-C
11.25° HORIZ. BEND

STA. 8+30.08 WL-C
11.25° HORIZ. BEND

12" C900 DR-14 WL-C

STA. 1+00.00 WL-E
8" CAP

STA. 1+26.84 WL-E
FIRE HYDRANT ASSY

8" C900 DR-14 WL-E

STA. 4+23.99 WL-F
8" CAP

STA. 1+92.12 WL-E
= STA. 3+96.08 WL-F
1-8"X8" TEE
3-8" GATE VALVES

8" C900 DR-14 WL-F

STA. 3+10.88 WL-F
11.25° HORIZ. BEND

STA. 2+46.74 WL-F
FIRE HYDRANT ASSY

STA. 8+63.79 WL-C
= STA. 2+34.83 WL-F
1-8"X12" CROSS
2-8" GATE VALVES
2-12"GATE VALVES

12" C900 DR-14 WL-C

8" C900 DR-14 WL-F

STA. 1+17.79 WL-F
FIRE HYDRANT ASSEMBLY

STA. 1+00.00 WL-F
8" CAP

Added tee and reduced down to 2" poly line and capped for future connection

Added 2" irrigation service

Added 1 - 4" schedule 40 PVC sleeve and 1-8" schedule 40 PVC sleeve

15
AMENITY CENTER

STA. 1+17.50 END WL-D
TIE TO EXIST. WL
CAP-PLUG

4" C900 DR-14 WL-D

STA. 13+19.79 WL-C =
STA. 1+00.00 BEGIN WL-D
1-12"X8" TEE
1-6"X4" REDUCER
1-4" GATE VALVE

STA. 13+06.79 WL-C
FIRE HYDRANT ASSEMBLY

STA. 2+65.00 WL-B
CAP-PLUG

16" C900 DR-14 WL-B

STA. 2+35.00 WL-B =
STA. 14+56.79 BEGIN WL-C
1-16"X12" TEE
2-16" GATE VALVES
1-12" GATE VALVE

12" C900 DR-14 WL-C

STA. 2+25.60 WL-B
END STEEL ENCASEMENT

16" C900 DR-14 W/ 32" STEEL ENCASEMENT WL-B

STA. 1+39.25 WL-B
BEGIN STEEL ENCASEMENT

STA. 1+00.00 WL-A =
STA. 1+30.00 WL-B
1-16"X16" TEE
3-16" GATE VALVES

STA. 1+17.21 WL-B
FIRE HYDRANT ASSEMBLY

STA. 1+00.00 WL-B
CAP-PLUG

16" C900 DR-14 WL-A

PI STA. 2+71.54 WL-A
45° BEND

PI STA. 2+96.38 WL-A
45° BEND

STA. 3+25.54 WL-A
BEGIN BORE AND
STEEL ENCASEMENT
UNDER EXST PAVEMENT

STA. 4+04.34 WL-A
END BORE AND
STEEL ENCASEMENT
UNDER EXST PAVEMENT

16" C900 DR-14 W/ 32" STEEL ENCASMENT WL-A

STA. 4+29.16 WL-A
REMOVE CAP
CONNECT TO EX. WL
CONTRACTOR TO VERIFY FLOWLINE AND
NOTIFY THE ENGINEER OF ANY DISCREPANCY

LIDELL WALKER PHASE 2

FUTURE LIDELL WALKER PHASE 6

FUTURE LIDELL WALKER PHASE 3

FUTURE LIDELL WALKER PHASE 4

WILSHIRE WAY

UNIVERSAL DRIVE

MELROSE STREET

MAIN HIPPO DRIVE

STREET P

STREET B

STREET D

CULVERT B

CR 133

FLORA BLVD

FOR OFFICIAL USE ONLY
Reviewed for Substantial Conformance by City of Hutto
HUTTO
Matt Barker, P.E.
City Engineer
Engineering - City of Hutto
10/01/2024

STATE OF TEXAS
AUSTIN R. SEIFERT
137175
LICENSED
PROFESSIONAL ENGINEER
07/29/2024

8834 N. Capital of Texas Hwy.
Suite 140
Austin, Texas 78759
(512)452-0371
FAX(512)454-9933
TBPELS FIRM #2946
GRAY ENGINEERING

NO.	BY	DATE	REVISION DESCRIPTION

RECORD ONLY

LIDELL WALKER PHASE 2B

OVERALL WATER DISTRIBUTION PLAN

PROJECT NO: 1725-11738
DESIGNED BY: ARS
DRAWN BY: ARS
CHECKED BY: TMH

NOTICE:
ALTERATION OF A SEALED DRAWING WITHOUT PROPER NOTIFICATION TO THE RESPONSIBLE ENGINEER IS A VIOLATION OF THE TEXAS ENGINEERING PRACTICE ACT.

PROJECT NO: 2157-ENG

SHEET 28 OF 52

H:\PROJECTS\1725 - GRBK EDGEWOOD LLC\LIDELL WALKER PHASE 2B\CAD\SHEETS\11738-C-WATR-O.DWG DATE: 7/29/2024 9:34:45 AM BY: MCARTER

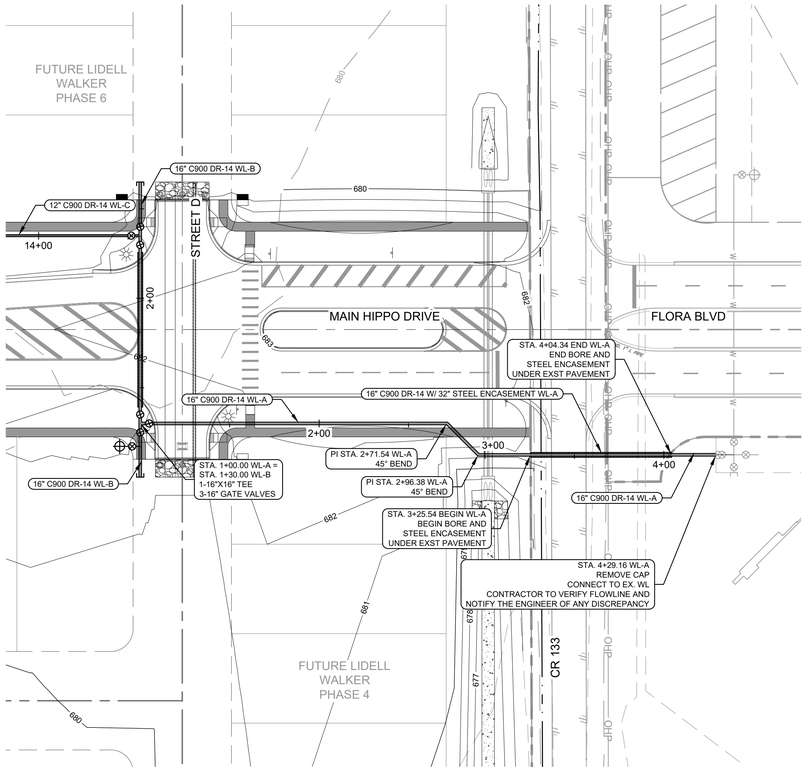

SCALE: 1" = 40'
GRAPHIC SCALE IN FEET
0 20' 40' 80'

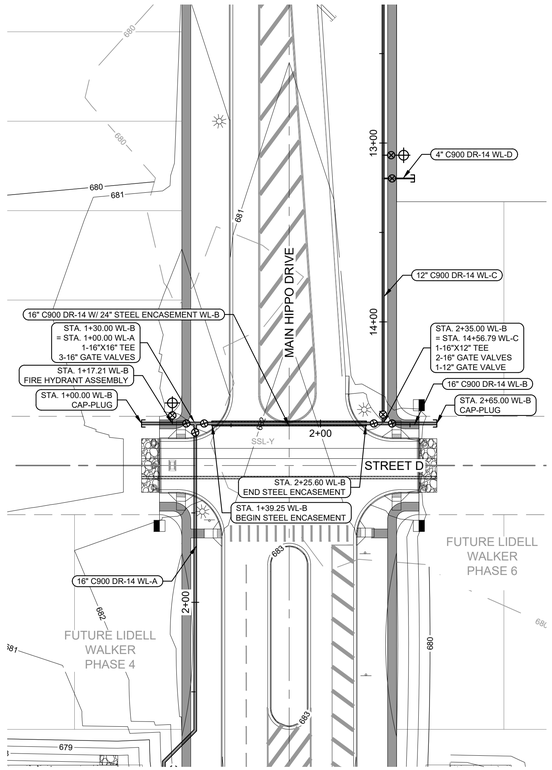

SCALE: 1" = 40'
GRAPHIC SCALE IN FEET
0 20' 40' 80'

LEGEND	
	PROPERTY BOUNDARY
XXX	EXISTING MAJOR CONTOUR
XXX	EXISTING MINOR CONTOUR
XXX	PROPOSED MAJOR CONTOUR
XXX	PROPOSED MINOR CONTOUR
	PROPOSED WATER LINE
	EXISTING WATER LINE
	PROPOSED FIRE HYDRANT
	PROPOSED GATE VALVE
	PROPOSED PLUG
	DOUBLE WATER SERVICE
	SINGLE WATER SERVICE
	DOUBLE WASTEWATER SERVICE
	SINGLE WASTEWATER SERVICE

NOTES:

1. **ALL WATER SYMBOLS ARE NOT TO SCALE AND ARE ONLY SHOWN FOR ILLUSTRATION PURPOSES. ALL WATER APPURTENANCES SHALL BE INSTALLED PER STANDARD DETAILS PROVIDED IN THE PLAN SET. CONTRACTOR TO PLACE ALL WATER APPURTENANCES AWAY FROM CURBS, VALLEY GUTTERS, AND DRIVEWAYS.**

WL-A

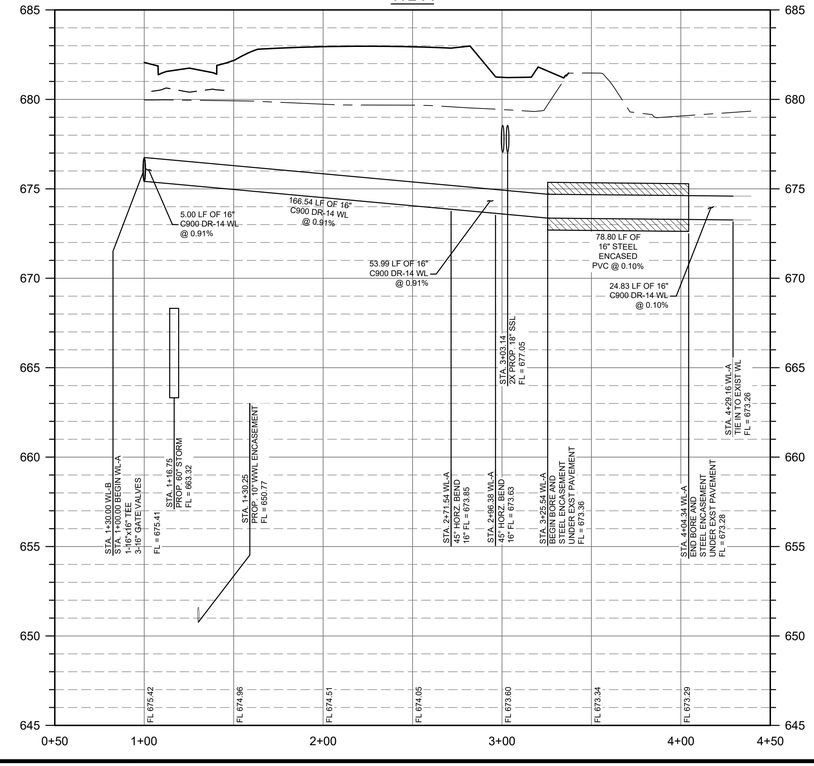

WL-B

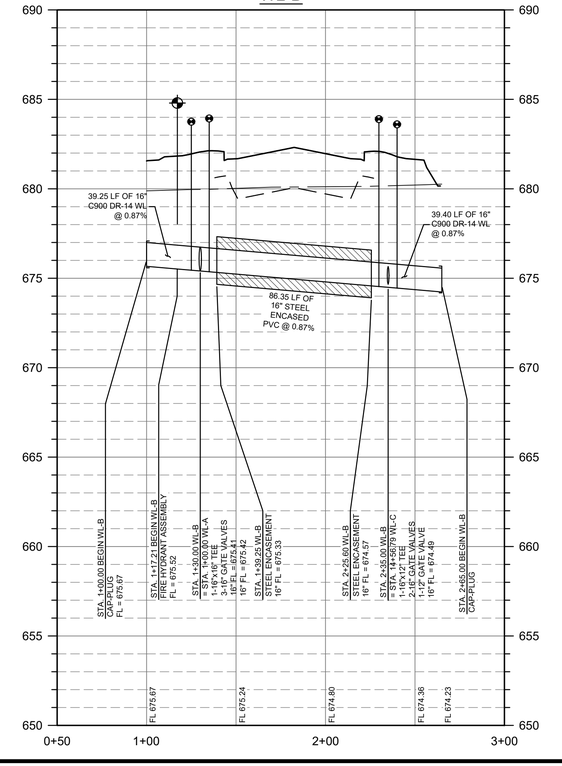

PROFILE LEGEND	
	PROPOSED GRADE
	PROPOSED SUBGRADE
	EXISTING GRADE
	PROPOSED WATER LINE

8834 N. Capital of Texas Hwy.
Suite 140
Austin, Texas 78759
(512)452-0371
FAX(512)454-9933
TBPELS FIRM #2946
GRAY ENGINEERING

NO.	BY	DATE	REVISION DESCRIPTION
			RECORD ONLY

LIDELL WALKER PHASE 2B

WL-A & WL-B PLAN & PROFILE
(1+00 TO END)

PROJECT NO: 1725-11738

DESIGNED BY: ARS

DRAWN BY: ARS

CHECKED BY: TMH

NOTICE:
ALTERATION OF A SEALED DRAWING WITHOUT PROPER NOTIFICATION TO THE RESPONSIBLE ENGINEER IS A VIOLATION OF THE TEXAS ENGINEERING PRACTICE ACT.

FOR OFFICIAL USE ONLY

Reviewed for Substantial Conformance by City of Hutto

HUTTO

Matt Rector, P.E.
City Engineer
Engineering - City of Hutto

10/01/2024

STATE OF TEXAS
AUSTIN R. SEIFERT
137175
LICENSED
PROFESSIONAL ENGINEER
07/29/2024

PROJECT NO: 2157-ENG

LIDELL WALKER PHASE 2B

SHEET 29 OF 52

H:\PROJECTS\1725 - GRBK EDGEWOOD LLC\LIDELL WALKER PHASE 2B\CAD\SHEETS\11738-C-WATR.DWG DATE: 7/29/2024 9:36:42 AM BY: MCARTER

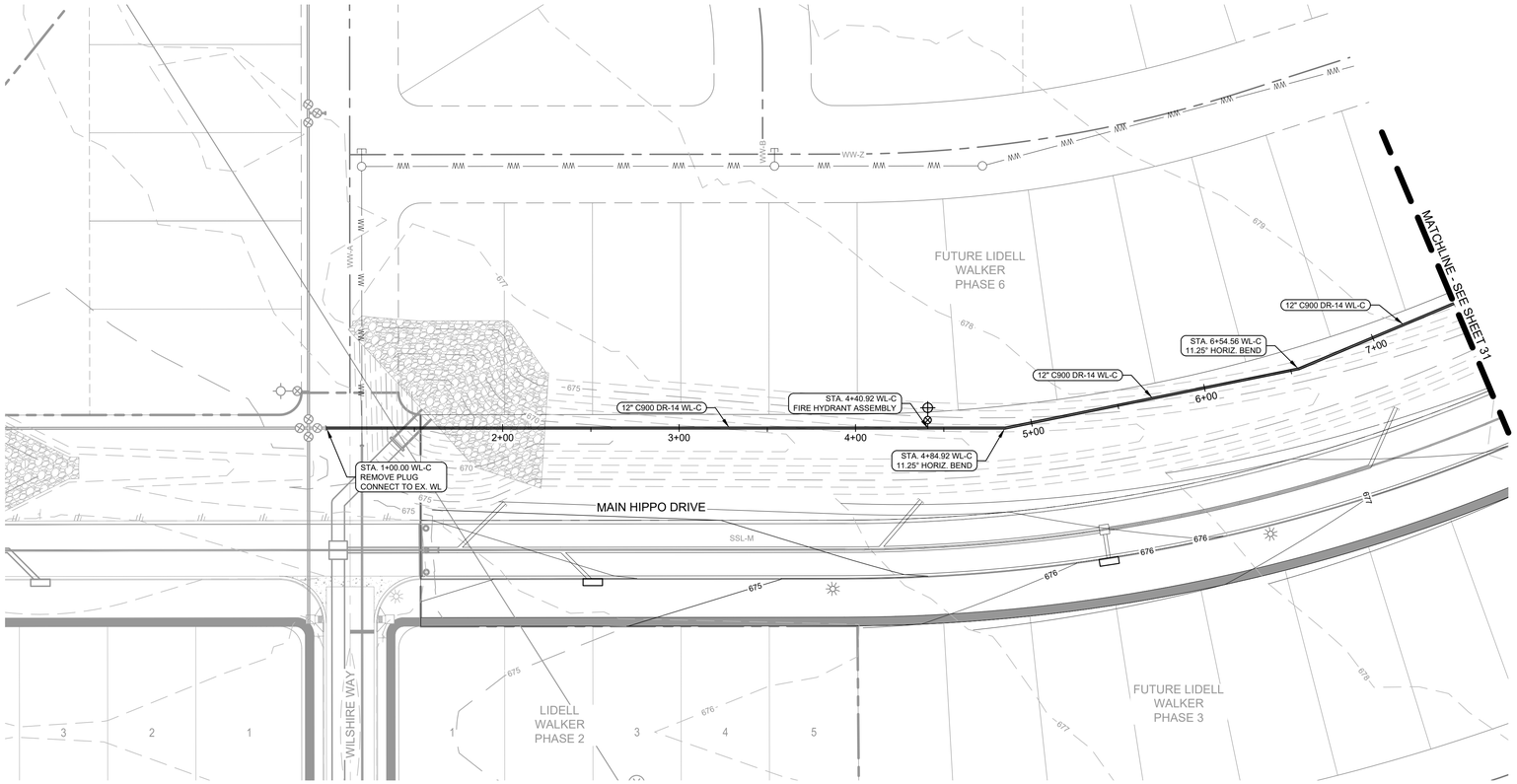

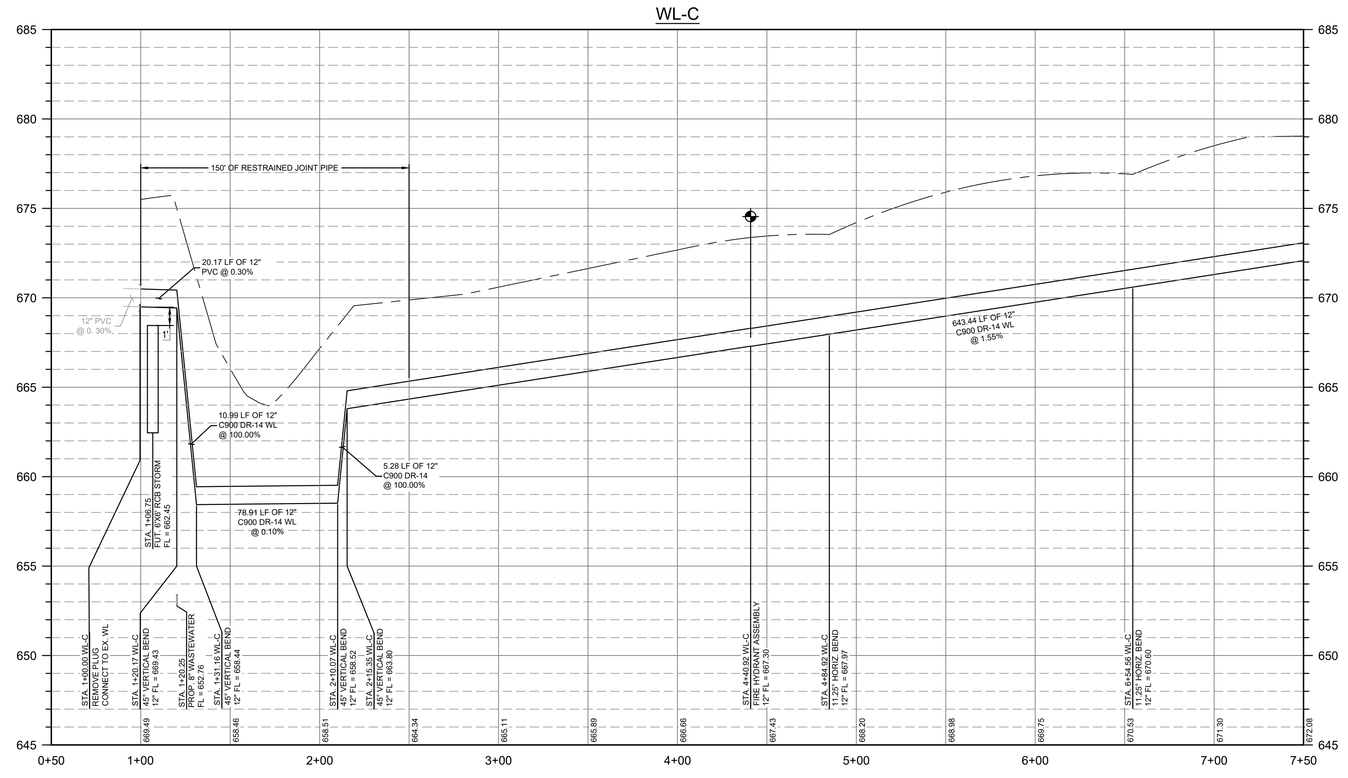

SCALE: 1" = 40'
GRAPHIC SCALE IN FEET
0 20' 40' 80'

LEGEND	
	PROPERTY BOUNDARY
XXX	EXISTING MAJOR CONTOUR
XXX	EXISTING MINOR CONTOUR
XXX	PROPOSED MAJOR CONTOUR
XXX	PROPOSED MINOR CONTOUR
	PROPOSED WATER LINE
	EXISTING WATER LINE
	PROPOSED FIRE HYDRANT
	PROPOSED GATE VALVE
	PROPOSED PLUG
	DOUBLE WATER SERVICE
	SINGLE WATER SERVICE
	DOUBLE WASTEWATER SERVICE
	SINGLE WASTEWATER SERVICE

NOTES:
1. **ALL WATER SYMBOLS ARE NOT TO SCALE AND ARE ONLY SHOWN FOR ILLUSTRATION PURPOSES. ALL WATER APPURTENANCES SHALL BE INSTALLED PER STANDARD DETAILS PROVIDED IN THE PLAN SET. CONTRACTOR TO PLACE ALL WATER APPURTENANCES AWAY FROM CURBS, VALLEY GUTTERS, AND DRIVEWAYS.**

PROFILE LEGEND	
	PROPOSED GRADE
	PROPOSED SUBGRADE
	EXISTING GRADE
	PROPOSED WATER LINE

FOR OFFICIAL USE ONLY
Reviewed for Substantial Conformance by City of Hutto
Matt Reiche, P.E.
City Engineer
Engineering - City of Hutto
10/01/2024

8834 N. Capital of Texas Hwy.
Suite 140
Austin, Texas 78759
(512)452-0371
FAX(512)454-9933
TBPELS FIRM #2946
GRAY ENGINEERING

NO.	BY	DATE	REVISION DESCRIPTION
			RECORD ONLY

LIDELL WALKER PHASE 2B

WL-C PLAN & PROFILE
(1+00 TO 7+50)

PROJECT NO: 1725-11738
DESIGNED BY: ARS
DRAWN BY: ARS
CHECKED BY: TMH

NOTICE:
ALTERATION OF A SEALED DRAWING WITHOUT PROPER NOTIFICATION TO THE RESPONSIBLE ENGINEER IS A VIOLATION OF THE TEXAS ENGINEERING PRACTICE ACT.

STATE OF TEXAS
AUSTIN R. SEIFERT
137175
LICENSED PROFESSIONAL ENGINEER
07/29/2024

PROJECT NO: 2157-ENG
LIDELL WALKER PHASE 2B

SHEET 30 OF 52

H:\PROJECTS\1725 - GRBK EDGEWOOD LLC\LIDELL WALKER PHASE 2B\CAD\SHEETS\11738-C-WATR.DWG DATE: 7/29/2024 9:37:08 AM BY: MCARTER

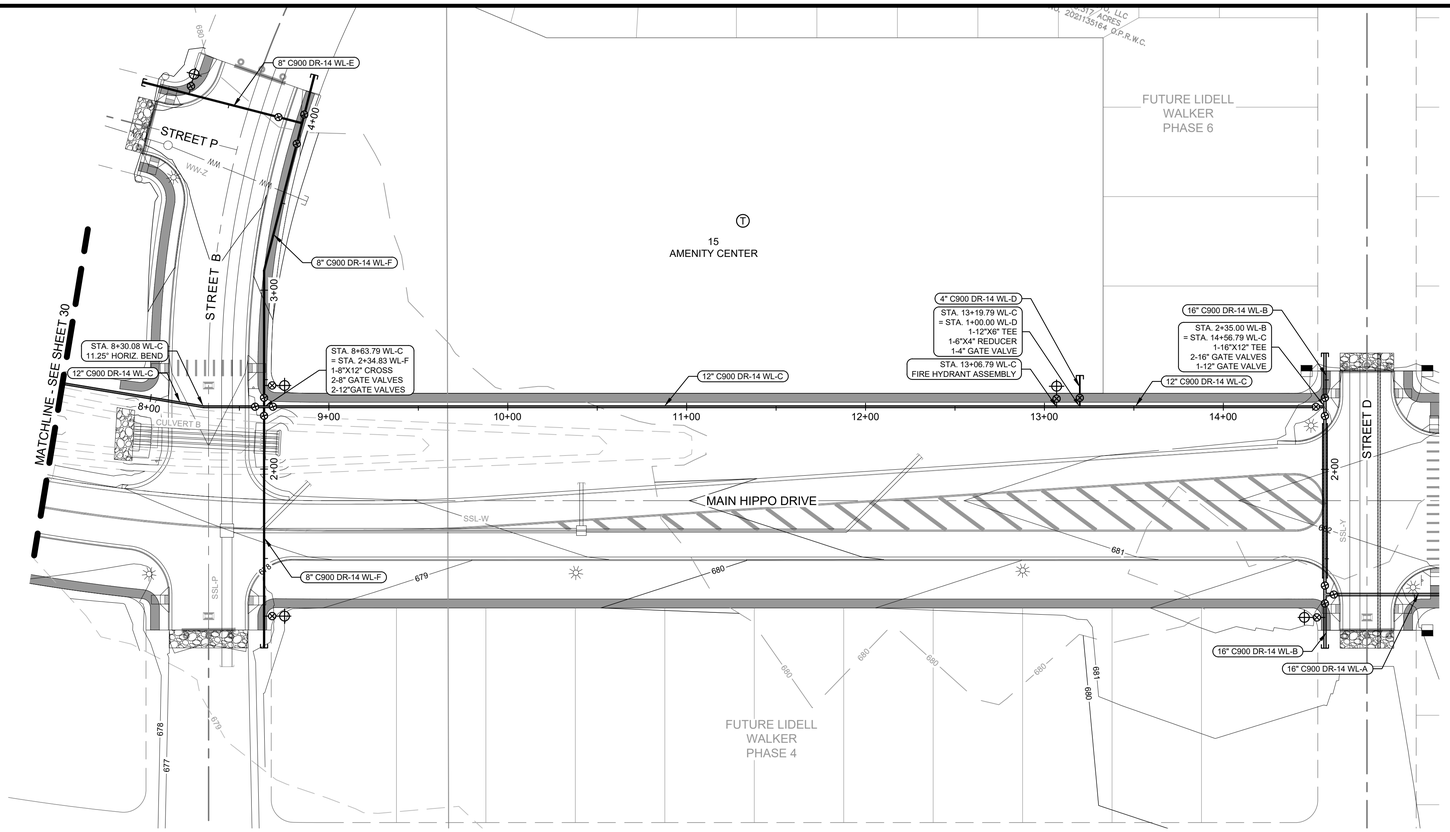

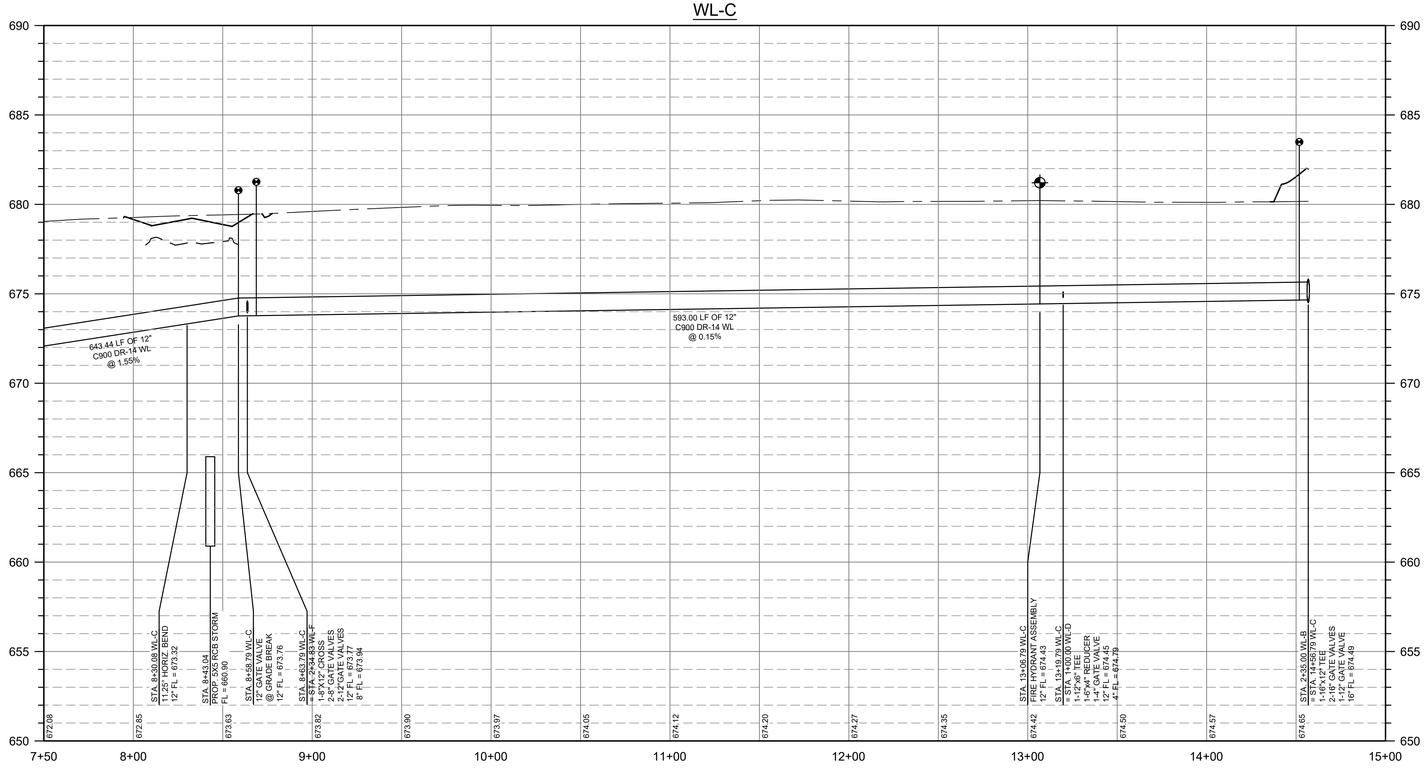



SCALE: 1" = 40'
GRAPHIC SCALE IN FEET
0 20' 40' 80'

LEGEND	
	PROPERTY BOUNDARY
XXX	EXISTING MAJOR CONTOUR
XXX	EXISTING MINOR CONTOUR
XXX	PROPOSED MAJOR CONTOUR
XXX	PROPOSED MINOR CONTOUR
	PROPOSED WATER LINE
	EXISTING WATER LINE
	PROPOSED FIRE HYDRANT
	PROPOSED GATE VALVE
	PROPOSED PLUG
	DOUBLE WATER SERVICE
	SINGLE WATER SERVICE
	DOUBLE WASTEWATER SERVICE
	SINGLE WASTEWATER SERVICE

NOTES:

1. **ALL WATER SYMBOLS ARE NOT TO SCALE AND ARE ONLY SHOWN FOR ILLUSTRATION PURPOSES. ALL WATER APPURTENANCES SHALL BE INSTALLED PER STANDARD DETAILS PROVIDED IN THE PLAN SET. CONTRACTOR TO PLACE ALL WATER APPURTENANCES AWAY FROM CURBS, VALLEY GUTTERS, AND DRIVEWAYS.**

PROFILE LEGEND	
	PROPOSED GRADE
	PROPOSED SUBGRADE
	EXISTING GRADE
	PROPOSED WATER LINE

8834 N. Capital of Texas Hwy.
Suite 140
Austin, Texas 78759
(512)452-0371
FAX(512)454-9933
TBPELS FIRM #2946
GRAY ENGINEERING

NO.	BY	DATE	REVISION DESCRIPTION
			RECORD ONLY

LIDELL WALKER PHASE 2B

WL-C PLAN & PROFILE (7+50 TO END)

PROJECT NO: 1725-11738

DESIGNED BY: ARS

DRAWN BY: ARS

CHECKED BY: TMH

NOTICE:
ALTERATION OF A SEALED DRAWING WITHOUT PROPER NOTIFICATION TO THE RESPONSIBLE ENGINEER IS A VIOLATION OF THE TEXAS ENGINEERING PRACTICE ACT.

FOR OFFICIAL USE ONLY

Reviewed for Substantial Conformance by City of Hutto

Matt Reiche, P.E.
City Engineer
Engineering - City of Hutto

10/01/2024

STATE OF TEXAS
AUSTIN R. SEIFERT
137175
LICENSED PROFESSIONAL ENGINEER
07/29/2024

PROJECT NO: 2157-ENG

LIDELL WALKER PHASE 2B

SHEET 31 OF 52

H:\PROJECTS\1725 - GRBK EDGEWOOD LLC\LIDELL WALKER PHASE 2B\CAD\SHEETS\11738-C-WATR.DWG DATE: 7/29/2024 9:37:35 AM BY: MCARTER

NOTES:

1. ALL SIGNS AND PAVEMENT MARKINGS SHALL BE IN ACCORDANCE WITH THE LATEST EDITION OF THE TEXAS MANUAL OF UNIFORM TRAFFIC DEVICES (TxMUTCD).
2. PER TxMUTCD REQUIREMENTS, THERE MUST BE A 2' MINIMUM OFFSET BEWTWEEN THE FACE OF CURB AND THE OUTSIDE EDGE OF SIGNS.
3. BLUE FIRE HYDRANT DELINEATORS TO BE PLACED IN OUTSIDE TRAVEL LANE, 3' FROM LIP OF GUTTER.
4. THE LETTERING FOR NAMES OF STREETS ON STREET NAME SIGNS SHALL BE COMPOSED OF ALL UPPER-CASE LETTERS.
5. BARRICADES TO BE INTALLED PER CITY OF HUTTO DETAIL CH-ST-12.
6. ALL STOP SIGNS TO BE ACCOMPANIED WITH ADJACENT 24 INCH WIDE WHITE STOP BAR.
7. ALL SIGNS TO BE INSTALLED PER TxMUTCD.
8. STREET LIGHTS SHALL NOT BE WITHIN 6 FEET OF A MAIN, SERVICE, APPURTENANCE, OR STRUCTURE FOR CITY WATER, WASTEWATER, OR STORM INFRASTRUCTURE.

SCALE: 1" = 60'
GRAPHIC SCALE IN FEET
0 30' 60' 120'

LEGEND	
	PROPERTY BOUNDARY
ST. NAME / STOP / R1-1 30"X30" / ST. NAME	PROPOSED STOP SIGN W/ STREET NAME SIGNS
	PROPOSED PEDESTRIAN X-ING SIGN
SPEED LIMIT 35	PROPOSED SPEED LIMIT SIGN
	PROPOSED SIGN
	PROPOSED STREET END BARRICADE
	STREET LIGHT (BY OTHERS)
	PROPOSED BLUE FIRE HYDRANT DELINEATOR
	2' WIDE, 10' LONG SOLID WHITE STRIPE CROSSWALK MARKINGS (3' APART)
	PROPOSED STOP BAR

MAIN HIPPO DRIVE
WILSHIRE WAY
LIDELL WALKER PHASE 2
FUTURE LIDELL WALKER PHASE 6
FUTURE LIDELL WALKER PHASE 3
FUTURE LIDELL WALKER PHASE 4
15 AMENITY CENTER
Sidewalk revised per sidewalk exhibit
24" WHITE CROSSWALK
6" WHITE EDGE LINE
4" DBL YELLOW CENTERLINE
24" YELLOW CROSS STRIPING
MAIN HIPPO DRIVE STOP R1-1 30"X30"
STREET B
STREET D
24" WHITE STOPBAR
CR 133 STOP R1-1 30"X30"
24" WHITE CROSS STRIPING
SPEED LIMIT 35
FLORA BLVD
OHP
O.S.

Reviewed for Substantial Conformance by City of Hutto
FOR OFFICIAL USE ONLY
Matt Rector, P.E.
City Engineer
Engineering - City of Hutto
10/01/2024

8834 N. Capital of Texas Hwy.
Suite 140
Austin, Texas 78759
(512)452-0371
FAX(512)454-9933
TBPELS FIRM #2946
GRAY ENGINEERING

NO.	BY	DATE	REVISION DESCRIPTION
			RECORD ONLY

LIDELL WALKER PHASE 2B

SIGNAGE AND STRIPING PLAN

PROJECT NO: 1725-11738
DESIGNED BY: ARS
DRAWN BY: ARS
CHECKED BY: TMH

NOTICE:
ALTERATION OF A SEALED DRAWING WITHOUT PROPER NOTIFICATION TO THE RESPONSIBLE ENGINEER IS A VIOLATION OF THE TEXAS ENGINEERING PRACTICE ACT.

STATE OF TEXAS
AUSTIN R. SEIFERT
137175
LICENSED PROFESSIONAL ENGINEER
07/29/2024

SHEET 32 OF 52

PROJECT NO: 2157-ENG
LIDELL WALKER PHASE 2B

H:\PROJECTS\1725 - GRBK EDGEWOOD LLC\LIDELL WALKER PHASE 2B\CAD\SHEETS\11738-C-SIGN.DWG DATE: 7/29/2024 9:38:20 AM BY: NBAUER

GUIDELINES FOR DESIGN AND INSTALLATION OF TEMPORARY EROSION AND SEDIMENT CONTROLS

TYPE OF STRUCTURE	REACH LENGTH	MAXIMUM DRAINAGE AREA	SLOPE
SILT FENCE	N/A 200 FEET 100 FEET 50 FEET	2 ACRES 2 ACRES 1 ACRE 1/2 ACRE	0 – 10% 10% – 20% 20% – 30% > 30%
TRIANGLE FILTER DIKE	100 FEET 50 FEET	1/2 ACRE 1/4 ACRE	< 30% > 30%
ROCK BERM [1] [2]	500 FEET	< 5 ACRES	0 – 10%

1. FOR ROCK BERM DESIGN, WHERE PARAMETERS ARE OTHER THAN STATED, DRAINAGE AREA CALCULATION AND ROCK BERM DESIGN MUST BE SUBMITTED FOR REVIEW.
2. HIGH SERVICE ROCK BERMS MAY BE REQUIRED IN AREAS OF ENVIRONMENTAL SIGNIFICANCE AS DETERMINED BY THE CITY OF HUTTO.

The City of Hutto Construction Standards and Details	CURRENT AS OF 10/01/2023	TEMPORARY EROSION & SEDIMENT CONTROL GUIDELINES
	THE ARCHITECT/ENGINEER ASSUMES RESPONSIBILITY FOR APPROPRIATE USE OF THIS STANDARD.	STANDARD NO. CH-ESC-01

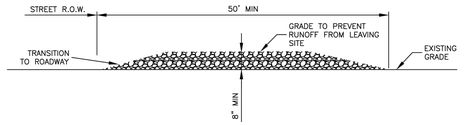

CROSS SECTION

NOTES:

1. STONE SIZE SHALL BE 3" – 6" OPEN GRADED ROCK.
2. THICKNESS OF CRUSHED STONE PAD TO BE NOT LESS THAN 8".
3. LENGTH SHALL BE A MINIMUM OF 50' FROM ACTUAL ROADWAY, AND WIDTH NOT LESS THAN FULL WIDTH OF INGRESS/EGRESS.
4. ENTRANCE SHALL BE PROPERLY GRADED TO PREVENT RUNOFF FROM LEAVING THE CONSTRUCTION SITE.
5. THE ENTRANCE SHALL BE MAINTAINED IN A CONDITION WHICH WILL PREVENT TRACKING OR FLOWING OF SEDIMENT ONTO PUBLIC RIGHTS OF WAY. ALL SEDIMENT SPILLED, DROPPED, WASHED OR TRACKED ONTO PUBLIC RIGHTS OF WAY MUST BE REMOVED IMMEDIATELY BY CONTRACTOR.
6. AS NECESSARY, WHEELS MUST BE CLEANED TO REMOVE SEDIMENT PRIOR TO ENTRANCE ONTO PUBLIC RIGHT OF WAY. WHEN WASHING IS REQUIRED, IT SHALL BE DONE ON AN AREA STABILIZED WITH CRUSHED STONE WHICH DRAINS INTO AN APPROVED SEDIMENT TRAP OR SEDIMENT BASIN. ALL SEDIMENT SHALL BE PREVENTED FROM ENTERING ANY STORM DRAIN, DITCH OR WATERCOURSE USING APPROVED METHODS.

The City of Hutto Construction Standards and Details	CURRENT AS OF 10/01/2023	STABILIZED CONSTRUCTION ENTRANCE
	THE ARCHITECT/ENGINEER ASSUMES RESPONSIBILITY FOR APPROPRIATE USE OF THIS STANDARD.	STANDARD NO. CH-ESC-02

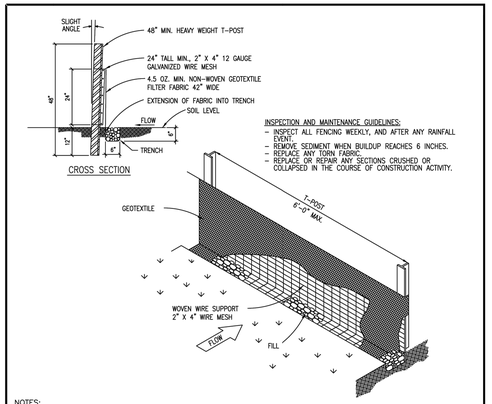

CROSS SECTION

NOTES:

1. STEEL POSTS WHICH SUPPORT THE SILT FENCE SHALL BE INSTALLED ON A SLIGHT ANGLE TOWARD THE ANTICIPATED RUNOFF SOURCE. POST MUST BE EMBEDDED A MIN. OF ONE (1') FOOT.
2. THE TOE OF THE SILT FENCE SHALL BE TRENCHED IN WITH A SPADE OR MECHANICAL TRENCHER, SO THAT THE DOWNSLOPE FACE OF THE TRENCH IS FLAT AND PERPENDICULAR TO THE LINE OF FLOW. WHERE FENCE CANNOT BE TRENCHED IN (E.G. PAVEMENT) WEIGHT FABRIC FLAP WITH WASHED GRAVEL ON UPHILL SIDE TO PREVENT FLOW UNDER FENCE.
3. THE TRENCH MUST BE A MINIMUM OF 6 INCHES DEEP AND 6 INCHES WIDE TO ALLOW FOR THE SILT FENCE FABRIC TO BE LAID IN THE GROUND AND BACKFILLED WITH COMPACTED MATERIAL.
4. SILT FENCE SHALL BE SECURELY FASTENED TO EACH STEEL SUPPORT POST OR TO WOVEN WIRE, WHICH IN TURN IS SECURELY FASTENED TO THE STEEL FENCE POSTS.
5. INSPECTION SHALL BE MADE WEEKLY OR AFTER EACH RAINFALL EVENT AND REPAIR OR REPLACEMENT SHALL BE MADE PROMPTLY AS NEEDED.
6. SILT FENCE SHALL BE REMOVED WHEN THE SITE IS COMPLETELY STABILIZED SO AS NOT TO BLOCK OR IMPEDE STORM FLOW OR DRAINAGE.
7. ACCUMULATED SILT SHALL BE REMOVED WHEN IT REACHES A DEPTH OF 6 INCHES. THE SILT SHALL BE DISPOSED OF IN AN APPROVED SITE AND IN SUCH A MANNER AS TO NOT CONTRIBUTE TO ADDITIONAL SILTATION.
8. SILT FENCE SHALL BE REMOVED AS SOON AS THE SOURCE OF SEDIMENT IS STABILIZED
9. J-HOOKS SHALL BE USED WHEN THE SILT FENCE IS INSTALLED AT AN ANGLE OF 30 DEGREES OR GREATER FROM PARALLEL TO THE CONTOURS.

The City of Hutto Construction Standards and Details	CURRENT AS OF 10/01/2023	SILT FENCE
	THE ARCHITECT/ENGINEER ASSUMES RESPONSIBILITY FOR APPROPRIATE USE OF THIS STANDARD.	STANDARD NO. CH-ESC-03

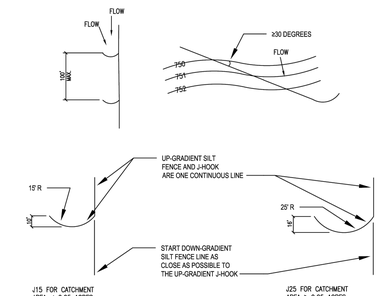

The City of Hutto Construction Standards and Details	CURRENT AS OF 10/01/2023	J-HOOKS
	THE ARCHITECT/ENGINEER ASSUMES RESPONSIBILITY FOR APPROPRIATE USE OF THIS STANDARD.	STANDARD NO. CH-ESC-04

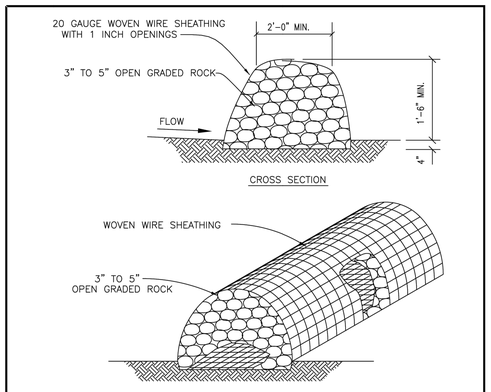

CROSS SECTION

NOTES:

1. USE ONLY OPEN GRADED ROCK (3 to 5") DIAMETER FOR ALL CONDITIONS.
2. THE ROCK BERM SHALL BE SECURED WITH A WOVEN WIRE SHEATHING HAVING MAXIMUM 1" OPENING AND MINIMUM WIRE DIAMETER OF 20 GAUGE.
3. THE ROCK BERM SHALL BE INSPECTED DAILY OR AFTER EACH RAIN, AND THE STONE AND/ OR FABRIC CORE–WOVEN SHEATHING SHALL BE REPLACED WHEN THE STRUCTURE CEASES TO FUNCTION AS INTENDED, DUE TO SEDIMENT ACCUMULATION AMONG THE ROCKS, WASHOUT, CONSTRUCTION TRAFFIC DAMAGE, ETC.
4. IF SEDIMENT REACHES A DEPTH OF 6", THE SEDIMENT SHALL BE REMOVED AND DISPOSED OF ON AN APPROVED SITE AND IN A MANNER THAT WILL NOT CREATE A SEDIMENTATION PROBLEM.
5. WHEN THE SITE IS COMPLETELY STABILIZED, THE BERM AND ACCUMULATED SEDIMENT SHALL BE REMOVED AND DISPOSED OF IN AN APPROVED MANNER.

The City of Hutto Construction Standards and Details	CURRENT AS OF 10/01/2023	ROCK BERM
	THE ARCHITECT/ENGINEER ASSUMES RESPONSIBILITY FOR APPROPRIATE USE OF THIS STANDARD.	STANDARD NO. CH-ESC-05

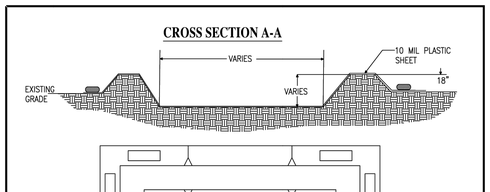

NOTES:
1. SET LENGTH AND WIDTH AS NECESSARY TO PROVIDE ADEQUATE SPACE FOR WASHOUT ACTIVITIES.
2. IF RESTRICTED BY DEPTH DUE TO BELOW GRADE APPURTENANCES, PLACE EARTHEN BERMS AT GRADE.
3. USE EXCAVATED MATERIAL TO CREATE EARTHEN BERMS SURROUNDING THE AREA TO BE DESIGNATED AS A CONCRETE WASHOUT.
4. USE 3" – 5" ROCK TO CREATE A STABLE ENTRANCE THAT IS GRADED AWAY FROM THE WASHOUT BASIN.
5. INSTALL A SIGN IDENTIFYING THE RESPONSIBLE PARTY FOR INSTALLATION AND MAINTENANCE OF THE WASHOUT.
6. PLACE 10MIL OR GREATER PLASTIC SHEETING.
7. SECURE SHEETING ON OUTSIDE OF BERM AREA USING SAND BAGS OR ROCK EQUIVALENT.

The City of Hutto Construction Standards and Details	CURRENT AS OF 10/01/2023	CONCRETE WASHOUT
	THE ARCHITECT/ENGINEER ASSUMES RESPONSIBILITY FOR APPROPRIATE USE OF THIS STANDARD.	STANDARD NO. CH-ESC-06

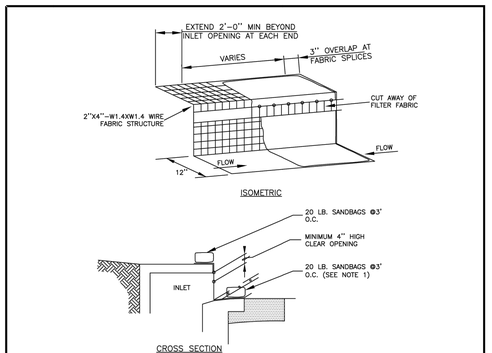

ISOMETRIC

CROSS SECTION

NOTES:

1. WHERE MINIMUM CLEARANCES CAUSE TRAFFIC TO DRIVE IN THE GUTTER, THE CONTRACTOR MAY SUBSTITUTE A 1" X 4" BOARD SECURED WITH CONCRETE NAILS 3' O.C. NAILED INTO THE GUTTER IN LIEU OF SANDBAGS TO HOLD THE FILTER DIKE IN PLACE. UPON REMOVAL, CLEAN ANY DIRT/DEBRIS FROM NAILING LOCATIONS, APPLY CHEMICAL SANDING AGENT AND APPLY NON–SHRINK GROUT FLUSH WITH SURFACE OF GUTTER.
2. A SECTION OF FILTER FABRIC SHALL BE REMOVED AS SHOWN ON THIS DETAIL OR AS DIRECTED BY THE ENGINEER OR DESIGNATED REPRESENTATIVE. FABRIC MUST BE SECURED TO WIRE BACKING WITH CLIPS OR HOG RINGS AT THIS LOCATION.
3. DAILY INSPECTION SHALL BE MADE BY THE CONTRACTOR AND SILT ACCUMULATION MUST BE REMOVED WHEN DEPTH REACHES 2".
4. CONTRACTOR SHALL MONITOR THE PERFORMANCE OF INLET PROTECTION DURING EACH RAINFALL EVENT AND IMMEDIATELY REMOVE THE INLET PROTECTIONS IF THE STORM–WATER BEGINS TO OVERTOP THE CURB.
5. INLET PROTECTIONS SHALL BE REMOVED AS SOON AS THE SOURCE OF SEDIMENT IS STABILIZED.

The City of Hutto Construction Standards and Details	CURRENT AS OF 10/01/2023	CURB INLET PROTECTION
	THE ARCHITECT/ENGINEER ASSUMES RESPONSIBILITY FOR APPROPRIATE USE OF THIS STANDARD.	STANDARD NO. CH-ESC-07

8834 N. Capital of Texas Hwy.
Suite 140
Austin, Texas 78759
(512)452-0371
FAX(512)454-9933
TBPELS FIRM #2946
GRAY ENGINEERING

NO.	BY	DATE	REVISION DESCRIPTION
			RECORD ONLY

LIDELL WALKER PHASE 2B

EROSION CONTROL DETAILS (1 OF 2)

PROJECT NO: 1725-11738

DESIGNED BY: ARS

DRAWN BY: ARS

CHECKED BY: TMH

NOTICE:
ALTERATION OF A SEALED DRAWING WITHOUT PROPER NOTIFICATION TO THE RESPONSIBLE ENGINEER IS A VIOLATION OF THE TEXAS ENGINEERING PRACTICE ACT.

FOR OFFICIAL USE ONLY
Reviewed for Substantial Conformance by City of Hutto
Matt Rector, P.E.
City Engineer
Engineering - City of Hutto
10/01/2024

STATE OF TEXAS
ARS
AUSTIN R. SEIFERT
137175
LICENSED
PROFESSIONAL ENGINEER
07/29/2024

PROJECT NO: 2157-ENG

LIDELL WALKER PHASE 2B

SHEET 33 OF 52

H:\PROJECTS\1725 - GRBK EDGEWOOD LLC\LIDELL WALKER PHASE 2B\CAD\SHEETS\11738-C-DET1.DWG DATE: 7/29/2024 9:39:12 AM BY: ASEIFERT

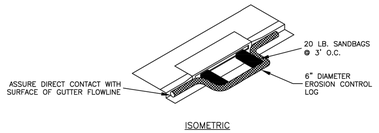

ISOMETRIC

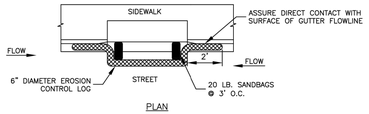

PLAN

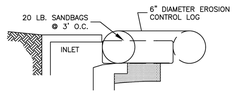

CROSS SECTION

NOTES:

1. EROSION CONTROL LOG CONTAINMENT MESH SHALL BE 100% BIODEGRADABLE, PHOTODEGRADABLE OR RECYCLABLE, AND FILL MATERIAL SHALL CONSIST OF MULCH, ASPEN EXCELSIOR FIBERS, CHIPPED SITE VEGETATION, COCONUT FIBERS, 100% RECYCLABLE FIBERS, OR ANY OTHER ACCEPTABLE MATERIAL EXCLUDING STRAW AND HAY.
2. DAILY INSPECTION SHALL BE MADE BY THE CONTRACTOR AND SILT ACCUMULATION MUST BE REMOVED WHEN DEPTH REACHES 2".
3. CONTRACTOR SHALL MONITOR THE PERFORMANCE OF INLET PROTECTION DURING EACH RAINFALL EVENT AND IMMEDIATELY REMOVE THE INLET PROTECTIONS IF THE STORM WATER BEGINS TO OVERTOP THE CURB.
4. INLET PROTECTIONS SHALL BE REMOVED AS SOON AS THE SOURCE OF SEDIMENT IS STABILIZED.

The City of Hutto Construction Standards and Details	CURRENT AS OF 10/01/2023	CURB INLET PROTECTION WITH EROSION CONTROL LOG
	THE ARCHITECT/ENGINEER ASSUMES RESPONSIBILITY FOR APPROPRIATE USE OF THIS STANDARD.	STANDARD NO. CH-ESC-08

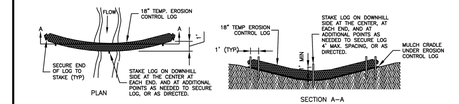

PLAN SECTION A–A

EROSION CONTROL LOG CHECK DAM

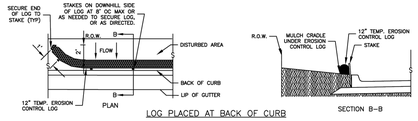

LOG PLACED AT BACK OF CURB

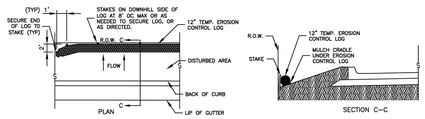

LOG PLACED AT EDGE OF RIGHT–OF–WAY

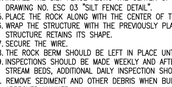

LAP DETAIL

NOTES:

1. DAILY INSPECTION SHALL BE MADE BY THE CONTRACTOR AND SILT ACCUMULATION MUST BE REMOVED WHEN DEPTH REACHES 6".
2. CONTRACTOR SHALL MONITOR THE PERFORMANCE OF LOGS DURING RAINFALL EVENT FOR PROPER PERFORMANCE.
3. LOGS SHALL CONSIST OF 100% BIODEGRADABLE, PHOTODEGRADABLE OR RECYCLABLE CONTAINMENT MESH STUFFED WITH FILTER MATERIAL.
4. STUFF LOGS WITH SUFFICIENT FILTER MATERIAL TO ACHIEVE DENSITY THAT WILL HOLD SHAPE WITHOUT EXCESSIVE DEFORMATION. FILTER MATERIAL SHALL CONSIST OF MULCH, ASPEN EXCELSIOR WOOD FIBERS, CHIPPED SITE VEGETATION, COCONUT FIBERS, 100% RECYCLABLE FIBERS, OR ANY OTHER ACCEPTABLE MATERIAL, EXCLUDING STRAW AND HAY.
5. STAKES SHALL BE 2" X 2" WOOD, 4' LONG, EMBEDDED SUCH THAT 2" PROTRUDES ABOVE LOG, OR AS DIRECTED.

The City of Hutto Construction Standards and Details	CURRENT AS OF 10/01/2023	EROSION CONTROL LOG
	THE ARCHITECT/ENGINEER ASSUMES RESPONSIBILITY FOR APPROPRIATE USE OF THIS STANDARD.	STANDARD NO. CH-ESC-09

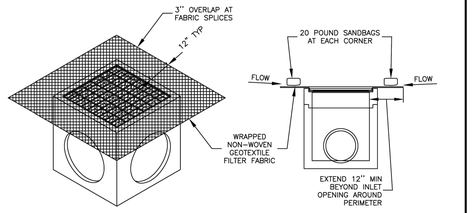

ISOMETRIC CROSS SECTION

NOTES:

1. DAILY INSPECTION SHALL BE MADE BY THE CONTRACTOR AND SILT ACCUMULATION MUST BE REMOVED WHEN DEPTH REACHES 2".
2. CONTRACTOR SHALL MONITOR THE PERFORMANCE OF INLET PROTECTION DURING EACH RAINFALL EVENT AND IMMEDIATELY CLEAN THE INLET PROTECTION IF EXCESSIVE PONDING OCCURS.
3. INLET PROTECTIONS SHALL BE REMOVED AS SOON AS THE SOURCE OF SEDIMENT IS STABILIZED.

The City of Hutto Construction Standards and Details	CURRENT AS OF 10/01/2023	AREA INLET PROTECTION
	THE ARCHITECT/ENGINEER ASSUMES RESPONSIBILITY FOR APPROPRIATE USE OF THIS STANDARD.	STANDARD NO. CH-ESC-10

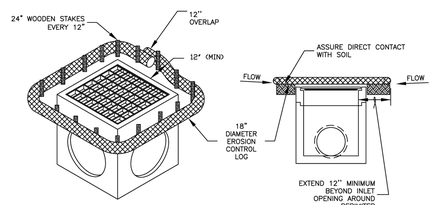

ISOMETRIC CROSS SECTION

NOTES:

1. EROSION CONTROL LOG CONTAINMENT MESH SHALL BE 100% BIODEGRADABLE, PHOTODEGRADABLE OR RECYCLABLE, AND FILL MATERIAL SHALL CONSIST OF MULCH, ASPEN EXCELSIOR FIBERS, CHIPPED SITE VEGETATION, COCONUT FIBERS, 100% RECYCLABLE FIBERS, OR ANY OTHER ACCEPTABLE MATERIAL EXCLUDING STRAW AND HAY.
2. DAILY INSPECTION SHALL BE MADE BY THE CONTRACTOR AND SILT ACCUMULATION MUST BE REMOVED WHEN DEPTH REACHES 6".
3. CONTRACTOR SHALL MONITOR THE PERFORMANCE OF INLET PROTECTION DURING EACH RAINFALL EVENT AND IMMEDIATELY CLEAN THE INLET PROTECTION IF EXCESSIVE PONDING OCCURS.
4. INLET PROTECTIONS SHALL BE REMOVED AS SOON AS THE SOURCE OF SEDIMENT IS STABILIZED.

The City of Hutto Construction Standards and Details	CURRENT AS OF 10/01/2023	AREA INLET PROTECTION WITH EROSION CONTROL LOG
	THE ARCHITECT/ENGINEER ASSUMES RESPONSIBILITY FOR APPROPRIATE USE OF THIS STANDARD.	STANDARD NO. CH-ESC-11

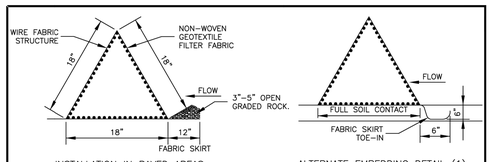

INSTALLATION IN PAVED AREAS

ALTERNATE EMBEDDING DETAIL (1)

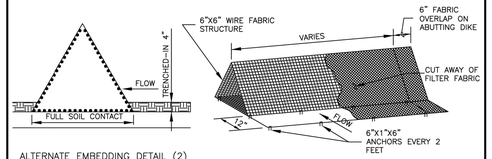

ALTERNATE EMBEDDING DETAIL (2)

NOTES:

1. DIKES SHALL BE PLACED IN A ROW WITH ENDS TIGHTLY ABUTTING.
2. FABRIC COVER AND SKIRT SHALL BE A CONTINUOUS WRAPPING OF GEOTEXTILE. THE SKIRT SHALL BE A CONTINUOUS EXTENSION OF THE UPSTREAM FACE FABRIC.
3. DIKES AND SKIRT SHALL BE SECURELY ANCHORED IN PLACE WITH WIRE STAPLES AT 2' INTERVALS ON BOTH EDGES AND SKIRT OR WITH 3/8" DIAMETER REBAR WITH TEE ENDS.
4. FILTER MATERIAL SHALL BE LAPPED OVER ENDS 6" TO COVER DIKE–TO–DIKE JOINTS. JOINTS SHALL BE FASTENED WITH GALVANIZED SHOAT RINGS.
5. INSPECTION SHALL BE MADE WEEKLY OR AFTER EACH RAINFALL EVENT AND REPAIR OR REPLACEMENT SHALL BE MADE PROMPTLY AS REQUIRED.
6. ACCUMULATED SILT SHALL BE REMOVED WHEN IT REACHES A DEPTH OF 4" AND DISPOSED OF IN A MANNER WHICH WILL NOT CAUSE ADDITIONAL SILTATION.
7. AFTER THE DEVELOPMENT SITE IS COMPLETELY STABILIZED, THE DIKES AND ANY REMAINING SILT SHALL BE REMOVED. SILT SHALL BE DISPOSED OF AS INDICATED IN NOTE #6 ABOVE.

The City of Hutto Construction Standards and Details	CURRENT AS OF 10/01/2023	TRIANGULAR FILTER DIKE
	THE ARCHITECT/ENGINEER ASSUMES RESPONSIBILITY FOR APPROPRIATE USE OF THIS STANDARD.	STANDARD NO. CH-ESC-12

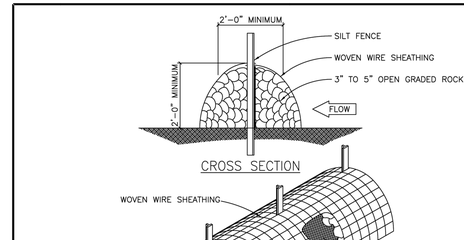

NOTES

1. LAYOUT THE ROCK BERM FOLLOWING AS CLOSELY AS POSSIBLE TO THE CONTOURS.
2. CLEAR THE GROUND OF DEBRIS, ROCKS AND/OR PLANTS THAT WILL INTERFERE WITH INSTALLATION.
3. PLACE WOVEN WIRE FABRIC ON THE GROUND ALONG THE PROPOSED INSTALLATION WITH ENOUGH OVERLAP TO COMPLETELY ENCIRCLE THE FINISHED SIZE OF THE BERM.
4. INSTALL THE SILT FENCE ALONG THE CENTER OF THE PROPOSED BERM PLACEMENT. INSTALLATION SHOULD BE AS DESCRIBED IN DRAWING NO. ESC 03 "SILT FENCE DETAIL".
5. PLACE THE ROCK ALONG WITH THE CENTER OF THE WIRE, BOTH SIDES OF THE SILT FENCE, TO DESIGNATED HEIGHT.
6. WRAP THE STRUCTURE WITH THE PREVIOUSLY PLACED WIRE MESH SECURE ENOUGH SO THAT, WHEN WALKED ACROSS, THE STRUCTURE RETAINS ITS SHAPE.
7. SECURE THE WIRE.
8. THE ROCK BERM SHOULD BE LEFT IN PLACE UNTIL ALL UPSTREAM AREAS ARE STABILIZED AND ACCUMULATED SILT REMOVED.
9. INSPECTIONS SHOULD BE MADE WEEKLY AND AFTER EACH RAINFALL EVENT BY THE CONTRACTOR, FOR THE INSTALLATION IN STREAM BEDS, ADDITIONAL DAILY INSPECTION SHOULD BE MADE ON ROCK BERM.
10. REMOVE SEDIMENT AND OTHER DEBRIS WHEN BUILDUP REACHES 6 INCHES (6") AND DISPOSE OF THE ACCUMULATED SILT IN AN APPROVED MANNER.
11. REPAIR ANY LOOSE WIRE SHEATHING.
12. THE BERM SHOULD BE RESHAPED AS NEEDED DURING INSPECTION.
13. THE BERM SHOULD BE REPLACED WHEN THE STRUCTURE CEASES TO FUNCTION AS INTENDED DUE TO SILT ACCUMULATION AMONG THE ROCKS, WASHOUT, CONSTRUCTION TRAFFIC DAMAGE, ETC.

The City of Hutto Construction Standards and Details	CURRENT AS OF 10/01/2023	HIGH SERVICE ROCK BERM
	THE ARCHITECT/ENGINEER ASSUMES RESPONSIBILITY FOR APPROPRIATE USE OF THIS STANDARD.	STANDARD NO. CH-ESC-13

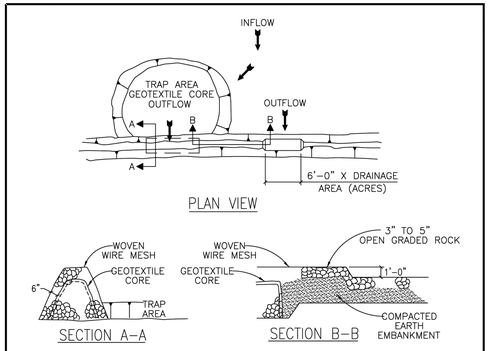

NOTES:

1. LOCATE THE SEDIMENT TRAP SO AS TO DISTURB AS FEW TREES AS POSSIBLE.
2. CLEAR AND GRUB THE AREA UNDER THE EMBANKMENT OF ALL VEGETATION AND ROOT MATS.
3. LAYOUT THE WIRE MESH AND THEN THE GEOTEXTILE FABRIC.
4. CONSTRUCT THE GEOTEXTILE CORE AND CORRESPONDING ROCK EMBANKMENT TO THE DESIGNATED HEIGHT AND CONFIGURATION.
5. WRAP THE STRUCTURE WITH THE PREVIOUSLY PLACED WIRE MESH SECURE ENOUGH SO THAT WHEN WALKED ACROSS, THE STRUCTURE RETAINS IT'S SHAPE. SECURE WITH THE WIRE.
6. PLACE THE EMBANKMENT MATERIAL IN 8 TO 12 INCH (8" – 12") LIFTS AND MACHINE COMPACT.
7. INSPECTION SHOULD BE MADE WEEKLY AND AFTER EACH RAINFALL. CHECK THE EMBANKMENT, SPILLWAYS, AND OUTLET FOR EROSION DAMAGE AND INSPECT THE EMBANKMENT FOR PIPING AND SETTLEMENT. REPAIR SHOULD BE MADE PROMPTLY AS NEEDED BY THE CONTRACTOR.
8. TRASH AND OTHER DEBRIS SHOULD BE REMOVED AND THE TRAP RESTORED TO ITS ORIGINAL DIMENSIONS WHEN THE SEDIMENT HAS ACCUMULATED TO HALF OF THE DESIGN DEPTH OF THE TRAP.
9. SEDIMENT REMOVED FROM THE TRAP SHOULD BE DEPOSITED IN AN APPROVED SPOILS AREA AND IN SUCH A MANNER THAT IT WILL NOT CAUSE ADDITIONAL SILTATION.

The City of Hutto Construction Standards and Details	CURRENT AS OF 10/01/2023	SEDIMENT TRAP
	THE ARCHITECT/ENGINEER ASSUMES RESPONSIBILITY FOR APPROPRIATE USE OF THIS STANDARD.	STANDARD NO. CH-ESC-14

8834 N. Capital of Texas Hwy.
Suite 140
Austin, Texas 78759
(512)452-0371
FAX(512)454-9933
TBPELS FIRM #2946
GRAY ENGINEERING

NO.	BY	DATE	REVISION DESCRIPTION
			RECORD ONLY

LIDELL WALKER PHASE 2B

EROSION CONTROL DETAILS (2 OF 2)

PROJECT NO: 1725-11738

DESIGNED BY: ARS

DRAWN BY: ARS

CHECKED BY: TMH

NOTICE:
ALTERATION OF A SEALED DRAWING WITHOUT PROPER NOTIFICATION TO THE RESPONSIBLE ENGINEER IS A VIOLATION OF THE TEXAS ENGINEERING PRACTICE ACT.

FOR OFFICIAL USE ONLY
Reviewed for Substantial Conformance by City of Hutto
CITY OF HUTTO
Matt Rector, P.E.
City Engineer
Engineering - City of Hutto
10/01/2024

STATE OF TEXAS
AUSTIN R. SEIFERT
137175
LICENSED PROFESSIONAL ENGINEER
07/29/2024

SHEET 34 OF 52

PROJECT NO: 2157-ENG LIDELL WALKER PHASE 2B

H:\PROJECTS\1725 - GRBK EDGEWOOD LLC\LIDELL WALKER PHASE 2B\CAD\SHEETS\11738-C-DETL.DWG DATE: 7/29/2024 9:39:20 AM BY: ASEIFERT

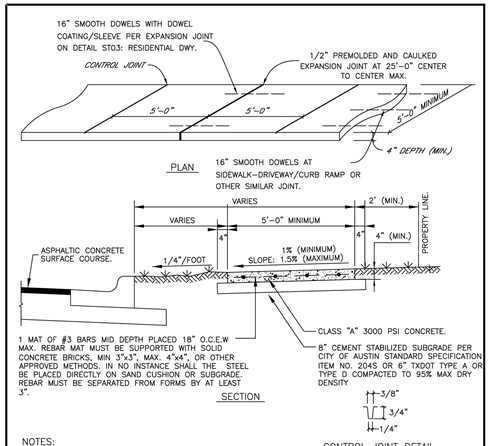

NOTES:
1. FOR ROLLER STAMPED SIDEWALK: MATCH TO SPECIFICATIONS.
2. STANDARD LOCATION OF SIDEWALK IS OFF BACK OF CURB. SPECIAL DESIGNS MAY BE APPROVED BY THE CITY ENGINEER, PRIOR TO FINAL DESIGN.
3. SIDEWALK SHALL CONFORM TO CURRENT AMERICANS WITH DISABILITIES ACT STANDARDS.
4. IF REQUIRED ALL SIDEWALKS SHALL BE SUBMITTED AND APPROVED BY THE TEXAS DEPARTMENT OF LICENSING AND REGULATION BY THE ENGINEER OF RECORD.
5. ANY VARIANCE IN TEXTURE, GRADE OR ALIGNMENT MUST BE APPROVED BY THE TEXAS DEPARTMENT OF LICENSING AND REGULATION.

The City of Hutto Construction Standards and Details	CURRENT AS OF 10/01/2023	TYPICAL SIDEWALK DETAIL
	THE ARCHITECT/ENGINEER ASSUMES RESPONSIBILITY FOR APPROPRIATE USE OF THIS STANDARD.	STANDARD NO. CH-ST-01

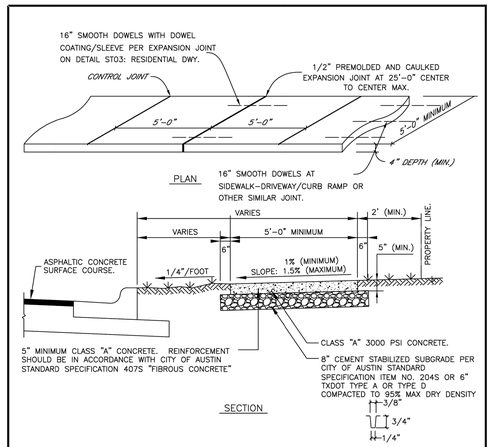

NOTES:
1. FOR ROLLER STAMPED SIDEWALK: MATCH TO SPECIFICATIONS.
2. STANDARD LOCATION OF SIDEWALK IS OFF BACK OF CURB. SPECIAL DESIGNS MAY BE APPROVED BY THE CITY ENGINEER, PRIOR TO FINAL DESIGN.
3. SIDEWALK SHALL CONFORM TO CURRENT AMERICANS WITH DISABILITIES ACT STANDARDS.
4. IF REQUIRED ALL SIDEWALKS SHALL BE SUBMITTED AND APPROVED BY THE TEXAS DEPARTMENT OF LICENSING AND REGULATION BY THE ENGINEER OF RECORD.
5. ANY VARIANCE IN TEXTURE, GRADE OR ALIGNMENT MUST BE APPROVED BY THE TEXAS DEPARTMENT OF LICENSING AND REGULATION.
6. CURING COMPOUND PER SPECIFICATION.

The City of Hutto Construction Standards and Details	CURRENT AS OF 10/01/2023	ALTERNATIVE SIDEWALK DETAIL
	THE ARCHITECT/ENGINEER ASSUMES RESPONSIBILITY FOR APPROPRIATE USE OF THIS STANDARD.	STANDARD NO. CH-ST-02

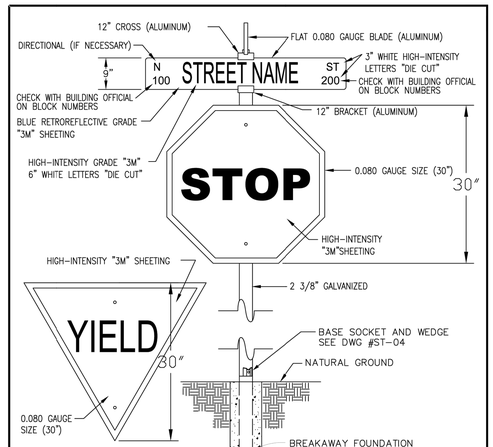

NOTES:
1. 7-FOOT MIN. HEIGHT FROM GROUND TO BOTTOM OF SIGN.
2. ALL SIGNS TO BE IN CONFORMANCE WITH THE CURRENT EDITION OF THE TEXAS MANUAL OF UNIFORM TRAFFIC CONTROL DEVICES (TMUTCD).
3. ALL SIGNAGE SHEETINGS SHALL BE HIGH-INTENSITY "3M" SHEETING.

The City of Hutto Construction Standards and Details	CURRENT AS OF 10/01/2023	STANDARD STREET SIGN DETAIL
	THE ARCHITECT/ENGINEER ASSUMES RESPONSIBILITY FOR APPROPRIATE USE OF THIS STANDARD.	STANDARD NO. CH-ST-03

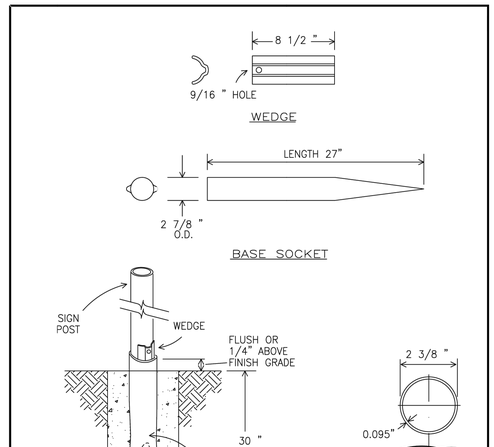

The City of Hutto Construction Standards and Details	CURRENT AS OF 10/01/2023	BREAKAWAY FOUNDATION DETAIL
	THE ARCHITECT/ENGINEER ASSUMES RESPONSIBILITY FOR APPROPRIATE USE OF THIS STANDARD.	STANDARD NO. CH-ST-04

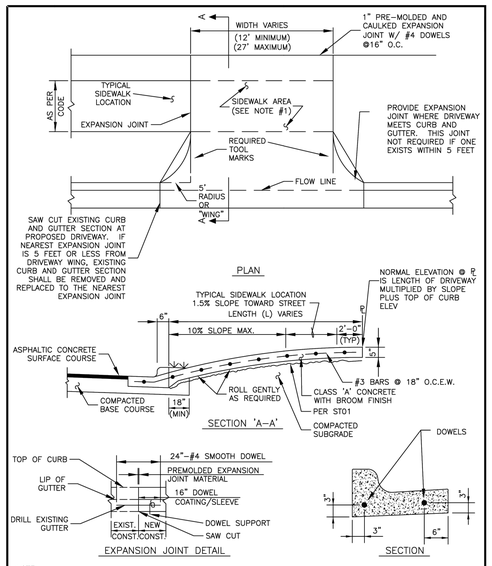

NOTE:
1. CONTROL JOIN DIMENSIONS PER DETAIL ST-01.
2. NO MANUFACTURED SAND.
3. DOWEL SLEEVE TO FIT DOWEL, BE SECURED TO STRUCTURE AND CAPPED AT END.

The City of Hutto Construction Standards and Details	CURRENT AS OF 10/01/2023	RESIDENTIAL DRIVEWAY DETAIL
	THE ARCHITECT/ENGINEER ASSUMES RESPONSIBILITY FOR APPROPRIATE USE OF THIS STANDARD.	STANDARD NO. CH-ST-05

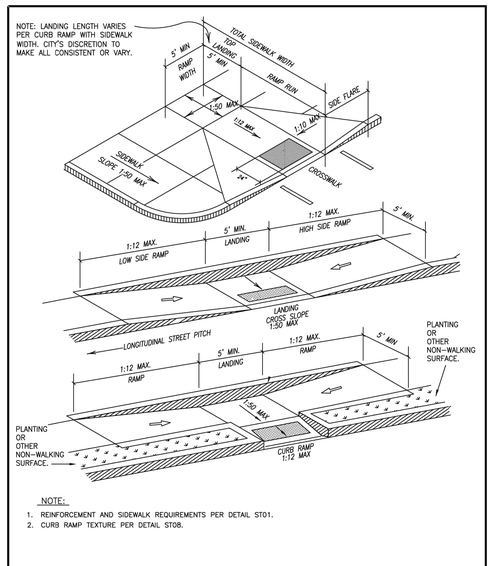

NOTE:
1. REINFORCEMENT AND SIDEWALK REQUIREMENTS PER DETAIL ST01.
2. CURB RAMP TEXTURE PER DETAIL ST08.

The City of Hutto Construction Standards and Details	CURRENT AS OF 10/01/2023	CURB RAMP DETAIL
	THE ARCHITECT/ENGINEER ASSUMES RESPONSIBILITY FOR APPROPRIATE USE OF THIS STANDARD.	STANDARD NO. CH-ST-07

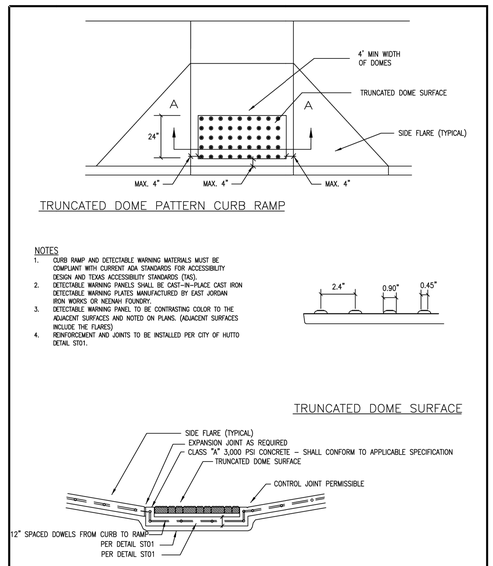

NOTES
1. CURB RAMP AND DETECTABLE WARNING MATERIALS MUST BE COMPLIANT WITH CURRENT ADA STANDARDS FOR ACCESSIBILITY DESIGN AND TEXAS ACCESSIBILITY STANDARDS (TAS).
2. DETECTABLE WARNING PANELS SHALL BE CAST-IN-PLACE CAST IRON DETECTABLE WARNING PLATES MANUFACTURED BY EAST JORDAN IRON WORKS OR NEENAH FOUNDRY.
3. DETECTABLE WARNING PANEL TO BE CONTRASTING COLOR TO THE ADJACENT SURFACES AND NOTED ON PLANS. (ADJACENT SURFACES INCLUDE THE FLARES).
4. REINFORCEMENT AND JOINTS TO BE INSTALLED PER CITY OF HUTTO DETAIL ST01.

The City of Hutto Construction Standards and Details	CURRENT AS OF 10/01/2023	CURB RAMP TEXTURE DETAIL
	THE ARCHITECT/ENGINEER ASSUMES RESPONSIBILITY FOR APPROPRIATE USE OF THIS STANDARD.	STANDARD NO. CH-ST-08

8834 N. Capital of Texas Hwy.
Suite 140
Austin, Texas 78759
(512)452-0371
FAX(512)454-9933
TBPELS FIRM #2946
GRAY ENGINEERING

NO.	BY	DATE	REVISION DESCRIPTION
			RECORD ONLY

LIDELL WALKER PHASE 2B

STREET DETAILS (1 OF 2)

PROJECT NO: 1725-11738

DESIGNED BY: ARS

DRAWN BY: ARS

CHECKED BY: TMH

NOTICE:
ALTERATION OF A SEALED DRAWING WITHOUT PROPER NOTIFICATION TO THE RESPONSIBLE ENGINEER IS A VIOLATION OF THE TEXAS ENGINEERING PRACTICE ACT.

FOR OFFICIAL USE ONLY

Reviewed for Substantial Conformance by City of Hutto

Matt Rector, P.E.
City Engineer
Engineering - City of Hutto

10/01/2024

STATE OF TEXAS
AUSTIN R. SEIFERT
137175
LICENSED PROFESSIONAL ENGINEER
07/29/2024

LIDELL WALKER PHASE 2B

PROJECT NO: 2157-ENG

SHEET 35 OF 52

H:\PROJECTS\1725 - GRBK EDGEWOOD LLC\LIDELL WALKER PHASE 2B\CAD\SHEETS\11738-C-DETL.DWG DATE: 7/29/2024 9:39:28 AM BY: ASEIFERT

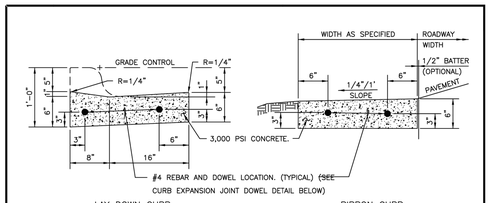

LAY DOWN CURB RIBBON CURB

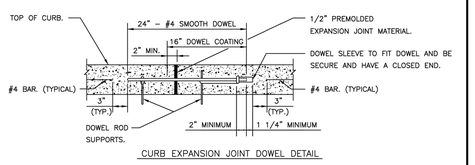

CURB EXPANSION JOINT DOWEL DETAIL

NOTES:

1. ALL WORK AND MATERIAL SHALL CONFORM TO ASTM A615, A615M, C309 AND D1752. BROOM FINISH EXPOSED SURFACE.
2. CONTROL JOINT SPACING SHALL NOT EXCEED 10'-0'.
3. EXPANSION JOINTS AS PER STANDARD ASTM D-1752.
4. EXPANSION JOINT INTERVALS NOT TO EXCEED 25'-0" FOR ALL CURBS AND CONSTRUCTION METHODS.
5. ALL CURBS SHALL HAVE A MINIMUM OF 4" OF COMPACTED FLEXIBLE BASE BETWEEN BOTTOM OF CURB AND TOP SUBGRADE THAT SHALL EXTEND A MINIMUM OF 18" BEHIND BACK OF CURB. TOTAL DEPTH OF FLEXIBLE BASE UNDER AND BEHIND CURB SHALL BE: (TOTAL DEPTH OF FLEXIBLE BASE) LESS (6-INCHES).
6. ALL CURBS SHALL CONFORM TO THESE DETAILS INDEPENDENT OF THE CONSTRUCTION METHODS USED.

The City of Hutto Construction Standards and Details	CURRENT AS OF 10/01/2023	LAYDOWN OR RIBBON CURB DETAIL
	THE ARCHITECT/ENGINEER ASSUMES RESPONSIBILITY FOR APPROPRIATE USE OF THIS STANDARD.	STANDARD NO. CH-ST-09

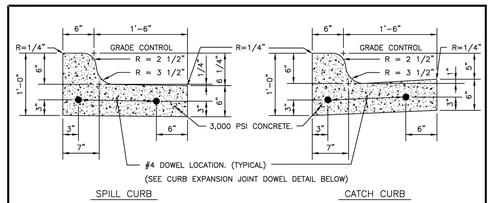

SPILL CURB CATCH CURB

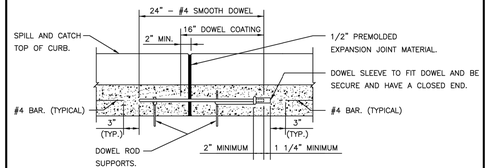

CURB EXPANSION JOINT DOWEL DETAIL

NOTES:

1. ALL WORK AND MATERIAL SHALL CONFORM TO ASTM A615, A615M, C309 AND D1752. BROOM FINISH EXPOSED SURFACE.
2. CONTROL JOINT SPACING SHALL NOT EXCEED 10'-0'.
3. EXPANSION JOINTS AS PER STANDARD ASTM D-1752.
4. EXPANSION JOINT INTERVALS NOT TO EXCEED 25'-0" FOR ALL CURBS/METHODS.
5. ALL CURBS SHALL HAVE A MINIMUM OF 4" OF COMPACTED FLEXIBLE BASE BETWEEN BOTTOM OF CURB AND TOP SUBGRADE THAT SHALL EXTEND A MIN OF 18" BEHIND BACK OF CURB.
6. ALL CURBS SHALL CONFORM TO THESE DETAILS INDEPENDENT OF THE CONSTRUCTION METHODS USED.

The City of Hutto Construction Standards and Details	CURRENT AS OF 10/01/2023	SPILL AND CATCH CURB DETAIL
	THE ARCHITECT/ENGINEER ASSUMES RESPONSIBILITY FOR APPROPRIATE USE OF THIS STANDARD.	STANDARD NO. CH-ST-10

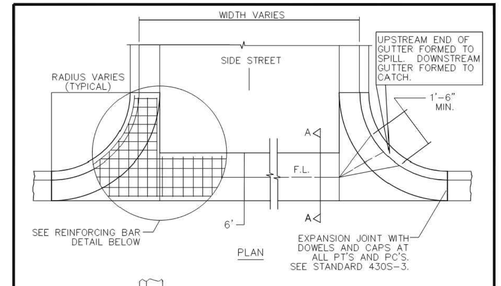

NOTES:

1. MATERIALS AND CONSTRUCTION METHODS SHALL CONFORM TO THE CITY OF HUTTO STANDARD SPECIFICATIONS.
2. CONCRETE FOR THE VALLEY GUTTER SHALL BE CLASS A.
3. MONOLITHIC CURB AND GUTTER SHALL BE MEASURED BY PLAN QUANTITY PER SQUARE FEET AND PAID AS VALLEY GUTTER.
4. THE UPSTREAM CURB MID POINT MUST BE AT OR LOWER THAN THE BEGINNING P.C. AND 0.5% MINIMUM HIGHER THAN THE OPPOSING MID POINT.
5. ALLOWABLE CONSTRUCTION JOINT AT THE CENTER LINE WHEN TRAFFIC FLOW MUST BE MAINTAINED, CONSTRUCTED AS A CONTROL JOINT.
6. NO VALVES OR MANHOLES ALLOWED IN CURB OR GUTTER.

The City of Hutto Construction Standards and Details	CURRENT AS OF 10/01/2023	VALLEY GUTTER DETAIL
	THE ARCHITECT/ENGINEER ASSUMES RESPONSIBILITY FOR APPROPRIATE USE OF THIS STANDARD.	STANDARD NO. CH-ST-11

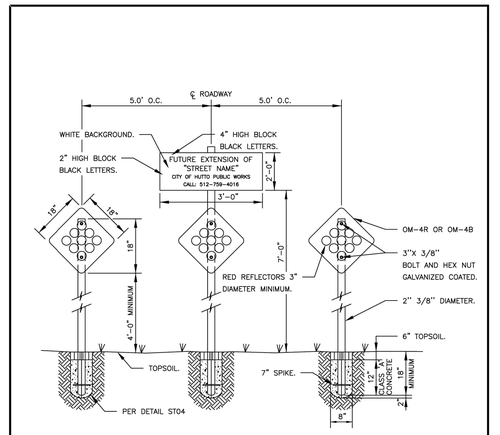

The City of Hutto Construction Standards and Details	CURRENT AS OF 10/01/2023	STREET END MARKER DETAIL
	THE ARCHITECT/ENGINEER ASSUMES RESPONSIBILITY FOR APPROPRIATE USE OF THIS STANDARD.	STANDARD NO. CH-ST-12

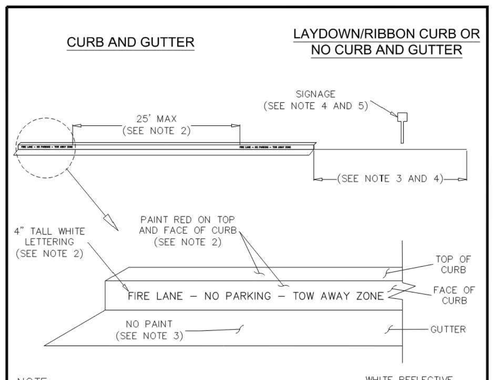

NOTE:

1. ALL CURBS TOUCHING THE FIRE LANE AS SHOWN ON THE STRIPING PLAN SHALL BE STRIPED AS SHOWN ON THIS DETAIL
2. TOP AND FACE OF CURB PAINTED RED WITH 4" HIGH WHITE LETTERS ON FACE OF CURB "FIRE LANE – NO PARKING – TOW AWAY ZONE" EVERY 25'.
3. NO PAINT ON GUTTERS, PAVEMENT OR LAYDOWN CURBS.
4. SIGNAGE MAY BE REQUIRED IN AREAS WHERE THE CURB FOR A FIRE LANE DOES NOT EXIST.
5. WHERE REQUIRED, SIGNS SHALL COMPLY WITH SECTION D103.6 OF THE INTERNATIONAL FIRE CODE.

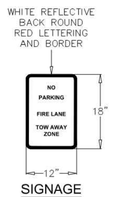

SIGNAGE
SEE NOTE 5

The City of Hutto Construction Standards and Details	CURRENT AS OF 10/01/2023	FIRE LANE MARKING DETAIL
	THE ARCHITECT/ENGINEER ASSUMES RESPONSIBILITY FOR APPROPRIATE USE OF THIS STANDARD.	STANDARD NO. CH-ST-14

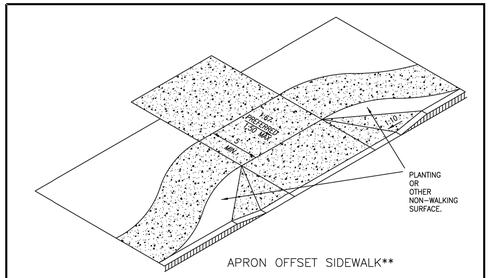

APRON OFFSET SIDEWALK**

**SEE CITY OF HUTTO DETAILS ST05 & ST06 FOR DRIVEWAY SPECIFICATIONS

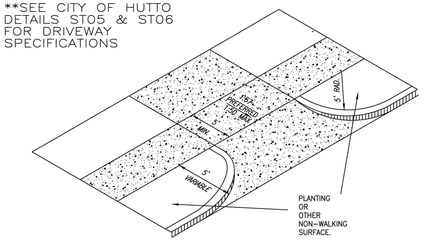

SETBACK SIDEWALK**

The City of Hutto Construction Standards and Details	CURRENT AS OF 10/01/2023	DRIVEWAY APRONS DETAIL
	THE ARCHITECT/ENGINEER ASSUMES RESPONSIBILITY FOR APPROPRIATE USE OF THIS STANDARD.	STANDARD NO. CH-ST-15

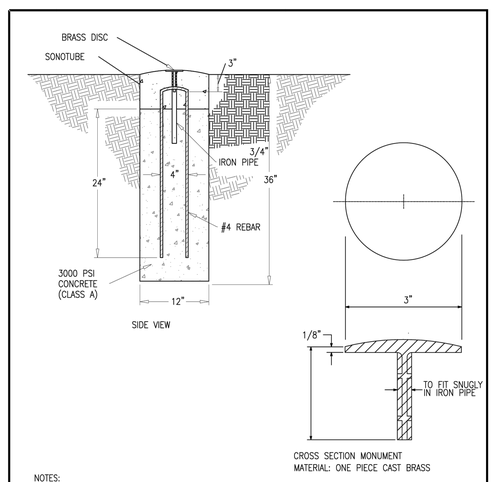

NOTES:

1. TOP OF DISK SHOULD BE INSCRIBED WITH "CITY OF HUTTO BENCHMARK #XXX". BENCHMARK NUMBER WILL BE SUPPLIED BY CITY.
2. MONUMENT SHALL NOT BE PLACED WHERE TRAFFIC WILL ENCOUNTER THE MONUMENT.
3. DO NOT PLACE MONUMENT NEAR 3-PHASE POWER LINES.
4. DO NOT PLACE MONUMENT NEAR TALL TREES OR OTHER OBJECTS.

The City of Hutto Construction Standards and Details	CURRENT AS OF 9/01/2023	BENCHMARK/SURVEY MONUMENT
	THE ARCHITECT/ENGINEER ASSUMES RESPONSIBILITY FOR APPROPRIATE USE OF THIS STANDARD.	STANDARD NO. CH-M-08

8834 N. Capital of Texas Hwy.
Suite 140
Austin, Texas 78759
(512)452-0371
FAX(512)454-9933
TBPELS FIRM #2946
GRAY ENGINEERING

NO.	BY	DATE	REVISION DESCRIPTION

RECORD ONLY

LIDELL WALKER PHASE 2B

STREET DETAILS (2 OF 2)

PROJECT NO: 1725-11738

DESIGNED BY: ARS

DRAWN BY: ARS

CHECKED BY: TMH

NOTICE:
ALTERATION OF A SEALED DRAWING WITHOUT PROPER NOTIFICATION TO THE RESPONSIBLE ENGINEER IS A VIOLATION OF THE TEXAS ENGINEERING PRACTICE ACT.

STATE OF TEXAS
AUSTIN R. SEIFERT
137175
LICENSED PROFESSIONAL ENGINEER
07/29/2024

FOR OFFICIAL USE ONLY
Reviewed for Substantial Conformance by City of Hutto
Matt Rector, P.E.
City Engineer
Engineering - City of Hutto
10/01/2024

SHEET 36 OF 52

PROJECT NO: 2157-ENG LIDELL WALKER PHASE 2B

H:\PROJECTS\1725 - GRBK EDGEWOOD LLC\LIDELL WALKER PHASE 2B\CAD\SHEETS\11738-C-DETL.DWG DATE: 7/29/2024 9:39:34 AM BY: ASEIFERT

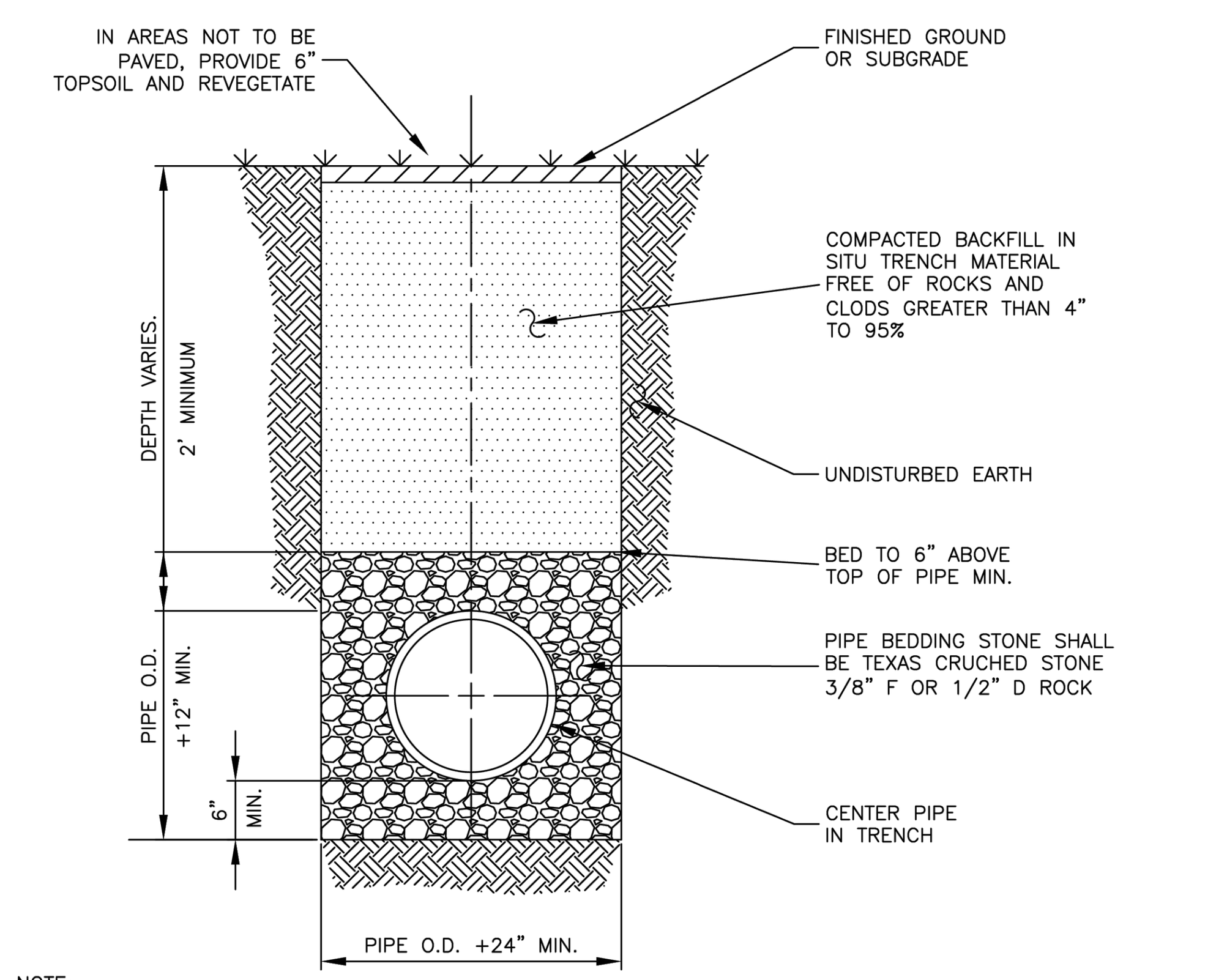

NOTE:

1. ALL TRENCHING AND TRENCH SAFETY SHALL COMPLY WITH APPLICABLE FEDERAL, STATE AND LOCAL REGULATIONS.
2. A MINIMUM OF ONE DENSITY TEST SHALL BE TAKEN EVERY TWO HUNDRED (200) FEET FOR EACH 8" LIFT OF BASE. PROCTORS FOR MATERIALS USED IN BACKFILLING SHALL BE OBTAINED BY A CERTIFIED LABORATORY. DENSITY TESTS SHALL BE CONDUCTED BY A CERTIFIED LABORATORY OR THE PERMITTEE'S CONSULTANTS. THE PERCENTAGE OF MAXIMUM DENSITY REQUIRED SHALL BE IN ACCORDANCE WITH THE LATEST EDITION OF "THE DEPARTMENT OF TRANSPORTATION STANDARD SPECIFICATIONS FOR ROAD AND BRIDGE CONSTRUCTION" AT THE TIME THE PERMIT WAS ISSUED. ALL DENSITY TESTS SHALL BE COMPLETED AND ACCEPTED ON EACH LAYER PRIOR TO ADDITIONAL BACKFILLING. A COPY OF ALL COMPLETED AND ACCEPTED DENSITY TESTS SHALL BE FURNISHED TO CITY OF HUTTO. BACKFILL SHALL BE A MINIMUM OF 95% MAXIMUM DENSITY PER TXDOT 113E SPECIFICATIONS.
3. STORM SEWER SHALL BE REINFORCED CONCRETE CLASS III UNLESS DEPTH OF PIPE REQUIRES STRONGER PIPE.
4. ALL JOINTS SHALL BE WRAPPED IN GEOTEXTILE FABRIC PER DETAIL SD04.
5. IF GROUND WATER IS PRESENT IN THE TRENCH, THE BEDDING MATERIAL SHALL BE SURROUNDED BY GEOTEXTILE FABRIC (MIRAFI 140N OR EQUAL) ON ALL SIDES.

The City of Hutto Construction Standards and Details	CURRENT AS OF 10/01/2023	STORM SEWER LINE BEDDING DETAIL (NON-PAVED SURFACE)
CITY OF HUTTO	THE ARCHITECT/ENGINEER ASSUMES RESPONSIBILITY FOR APPROPRIATE USE OF THIS STANDARD.	STANDARD NO. CH-SD-01

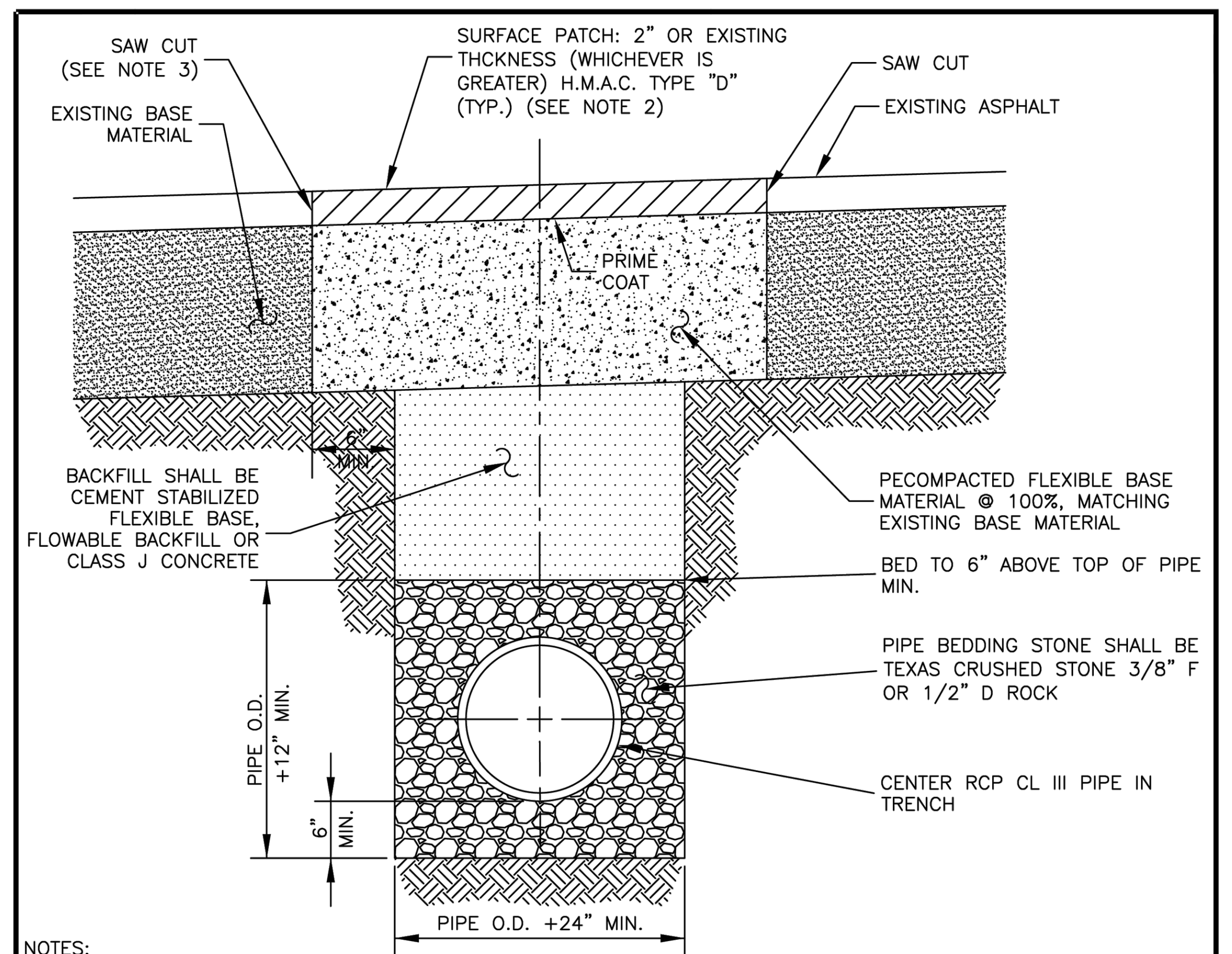

NOTES:

1. A MINIMUM OF ONE DENSITY TEST SHALL BE TAKEN EVERY TWO HUNDRED FEET (200') FOR EACH EIGHT INCH (8") LIFT OF BASE. PROCTORS FOR MATERIALS USED IN BACKFILLING SHALL BE OBTAINED BY A CERTIFIED LABORATORY. DENSITY TESTS SHALL BE CONDUCTED BY A CERTIFIED LABORATORY OR THE PERMITTEE'S CONSULTANTS. THE PERCENTAGE OF MAXIMUM DENSITY REQUIRED SHALL BE IN ACCORDANCE WITH THE LATEST EDITION OF "THE DEPARTMENT OF TRANSPORTATION STANDARD SPECIFICATIONS FOR ROAD AND BRIDGE CONSTRUCTION" AT THE TIME THE PERMIT WAS ISSUED. ALL DENSITY TESTS SHALL BE COMPLETED AND ACCEPTED ON EACH LAYER PRIOR TO ADDITIONAL BACKFILLING. A COPY OF ALL COMPLETED AND ACCEPTED DENSITY TESTS SHALL BE FURNISHED TO CITY OF HUTTO. BACKFILL COMPACTION SHALL BE A MINIMUM OF 95% MAXIMUM DENSITY PER TXDOT 113E SPECFICATIONS.
2. THICKNESS FOR HMAC, ROADWAY FLEXIBLE BASE COURSE, AND SELECT STREET SUBBASE PER GEOTECHNICAL ENGINEER RECOMMENDATIONS. H.M.A.C. SHOWN IN THIS DETAIL IS SEPARATE FROM ANY ADDITIONAL THICKNESS CREATED BY ANY OVERLAY ITEM IN CONTRACT.
3. THE CONTRACTOR SHALL SAW CUT, REMOVE AND REPLACE EXISTING PAVEMENT AND FLEXIBLE BASE A MINIMUM OF 6" BEYOND EITHER THE EDGE OF THE STORM SEWER TRENCH OR THE POINT WHERE EXISTING PAVEMENT IS DAMAGED DUE TO TRENCHING OPERATIONS, WHICHEVER IS GREATER.
4. CONTRACTOR OR ENGINEER MAY USE FLOWABLE BACKFILL AS AN ALTERNATE FOR BACKFILL MATERIAL.
5. THE CONTRACTOR SHALL PROVIDE STEEL PLATES TO SPAN THE TRENCH AS NECESSARY OR TO ALLOW BACKFILL TO CURE. SUCH PLATES SHALL BE SUITABLE FOR VEHICLE PASSAGE OVER THE TRENCH AND SHALL BE SATISFACTORILY ANCHORED IN PLACE. COSTS FOR THIS ITEM SHALL BE INCLUDED IN UNIT PRICE BIDS FOR STORM SEWER PIPE.
6. ALL TRENCHING AND TRENCH SAFETY SHALL COMPLY WITH APPLICABLE FEDERAL, STATE AND LOCAL REGULATIONS.
7. IF GROUND WATER IS PRESENT IN THE TRENCH, THE BEDDING MATERIAL SHALL BE SURROUNDED BY GEOTEXTILE FABRIC (MIRAFI 140N OR EQUAL) ON ALL SIDES.

The City of Hutto Construction Standards and Details	CURRENT AS OF 10/01/2023	STORM SEWER LINE BEDDING DETAIL (PAVED SURFACE)
CITY OF HUTTO	THE ARCHITECT/ENGINEER ASSUMES RESPONSIBILITY FOR APPROPRIATE USE OF THIS STANDARD.	STANDARD NO. CH-SD-02

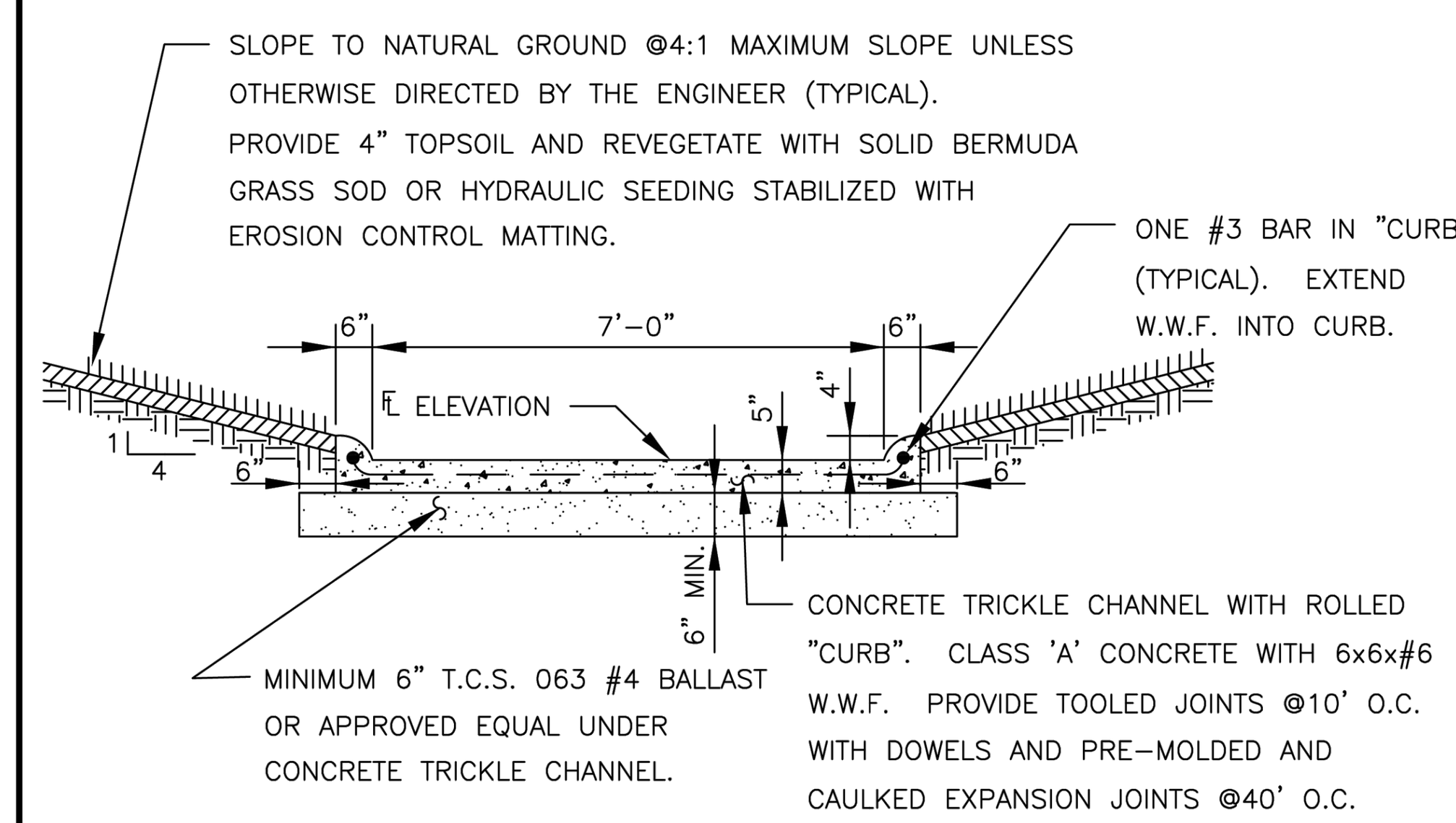

The City of Hutto Construction Standards and Details	CURRENT AS OF 10/01/2023	CONCRETE TRICKLE CHANNEL DETAIL
CITY OF HUTTO	THE ARCHITECT/ENGINEER ASSUMES RESPONSIBILITY FOR APPROPRIATE USE OF THIS STANDARD.	STANDARD NO. CH-SD-03

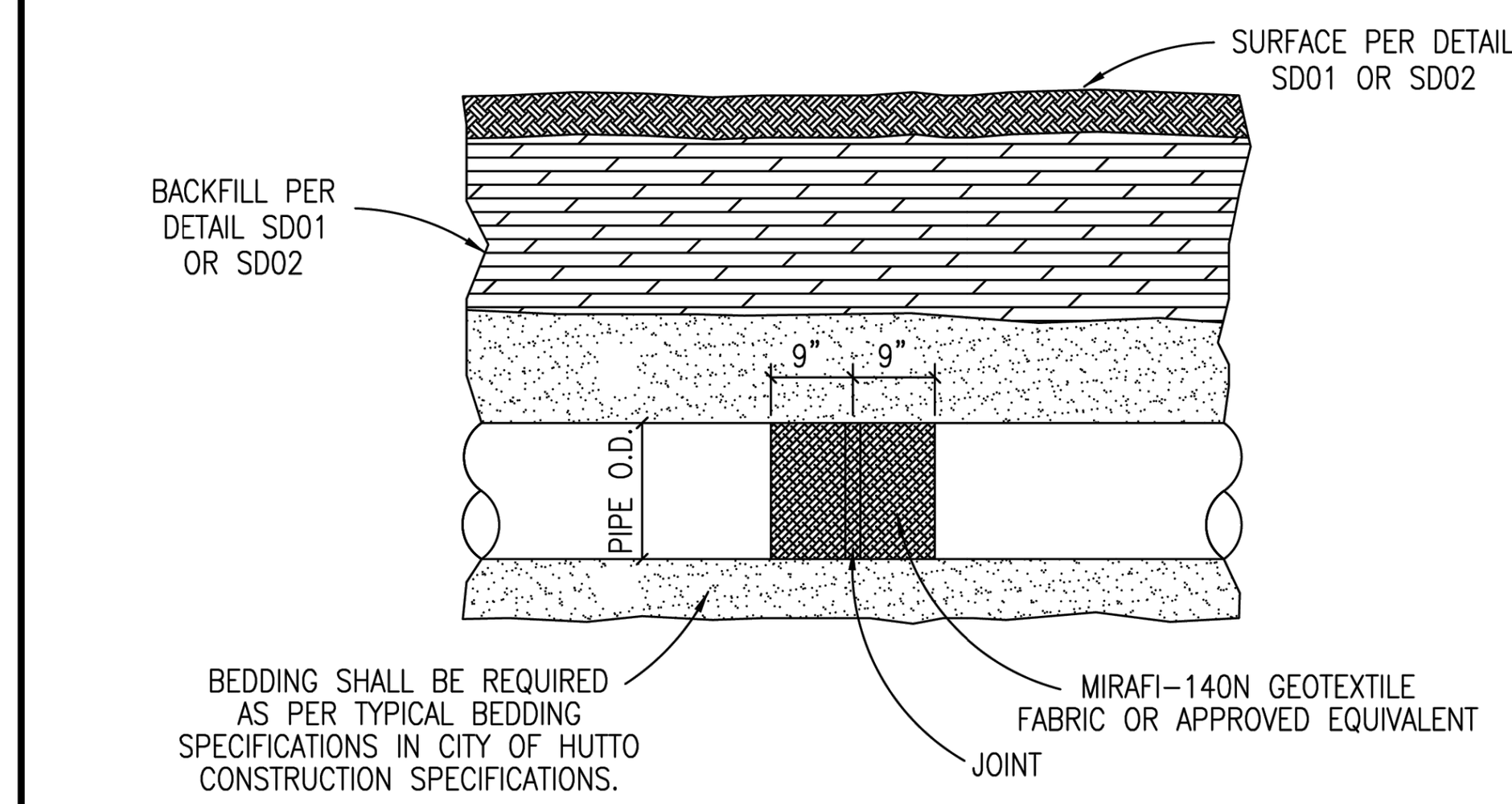

NOTES
1. PIPE SHALL BE REINFORCED CONCRETE PIPE CLASS III UNLESS THE DEPTH OF PIPE REQUIRES A STRONGER CLASS.
2. ALL FITTINGS AND WYES SHALL BE MANUFACTURED AND NOT CONSTRUCTED ON THE PROJECT WITHOUT PRIOR APPROVAL FROM THE CITY ENGINEER.
3. ALL JOINTS SHALL BE WRAPPED WITH MIRAFI-140N GEOTEXTILE FABRIC OR APPROVED EQUIVALENT. EACH JOINT SHALL BE WRAPPED WITH 18" WIDE FABRIC CENTERED ON THE JOINT.

The City of Hutto Construction Standards and Details	CURRENT AS OF 10/01/2023	STORM SEWER JOINT
CITY OF HUTTO	THE ARCHITECT/ENGINEER ASSUMES RESPONSIBILITY FOR APPROPRIATE USE OF THIS STANDARD.	STANDARD NO. CH-SD-04

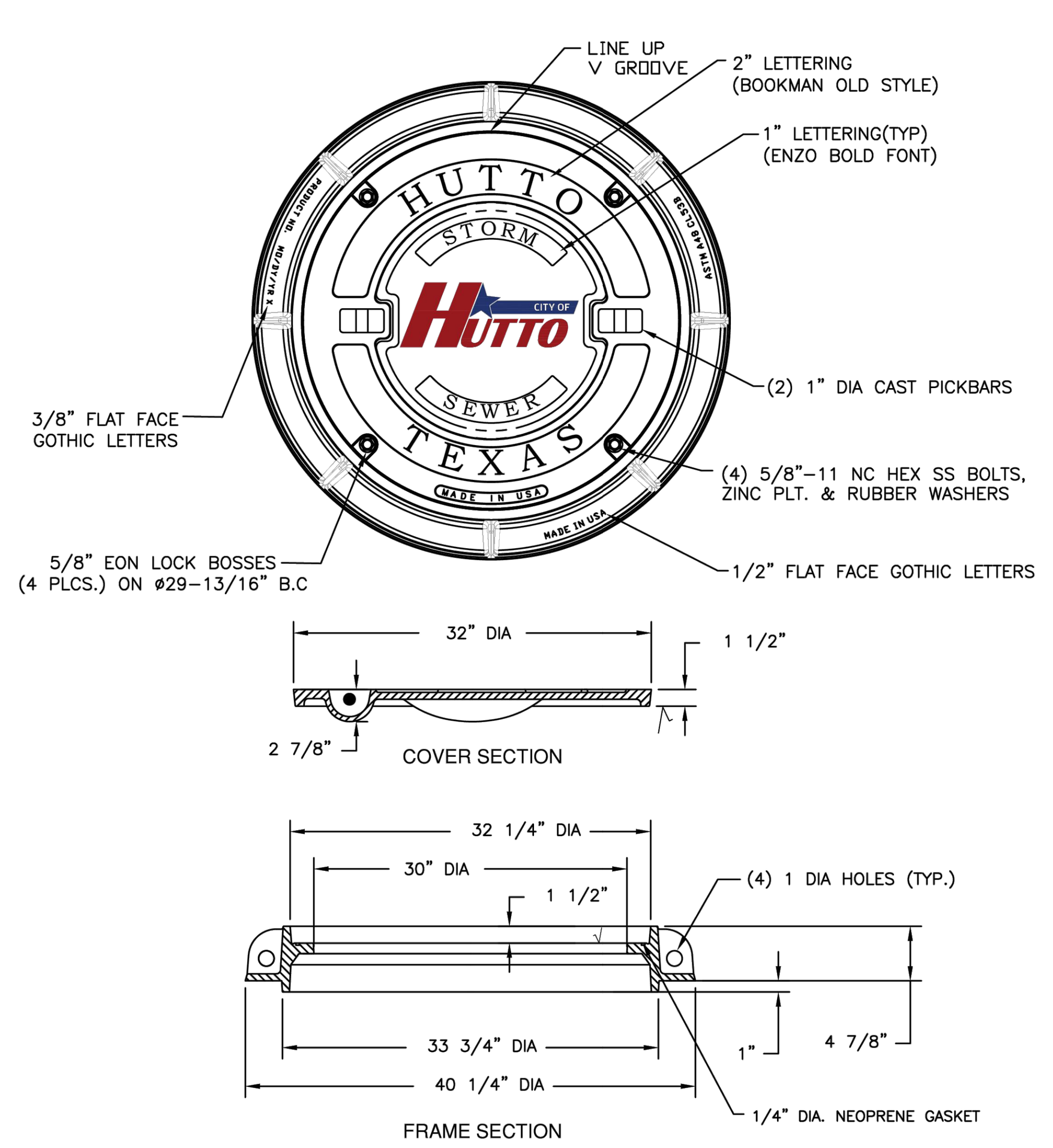

NOTES :
1. BOLTED STORM WATER MANHOLE SET TO BE EAST JORDAN IRON WORKS, INC. CATALOG NO V2432. OR APPROVED EQUAL, COVER TO BE STAMPED "STORM SEWER."
2. STANDARD STORMWATER MANHOLE SET TO BE HEAVY DUTY LOAD RATED.
3. FOR MORE DETAILED SPECIFICATIONS, REFER TO EAST JORDAN IRON WORKS, INC. REFERENCE PRODUCT DRAWING 42432114W01
4. FOR STANDARD STORMWATER MANHOLE SET REFER TO DETAIL SD01.
5. MANHOLE COVER TO BE DUCTILE IRON PER ASTM A536 (70-50-05). SEE EAST JORDAN IRON WORKS, INC CATALOG NO. V2432-3, PRODUCT DRAWING 42432114.
6. MANHOLE FRAME TO BE GRAY IRON PER ASTM A48 CL35B.

The City of Hutto Construction Standards and Details	CURRENT AS OF 10/01/2023	BOLTED STORM SEWER MANHOLE SET
CITY OF HUTTO	THE ARCHITECT/ENGINEER ASSUMES RESPONSIBILITY FOR APPROPRIATE USE OF THIS STANDARD.	STANDARD NO. CH-SD-05

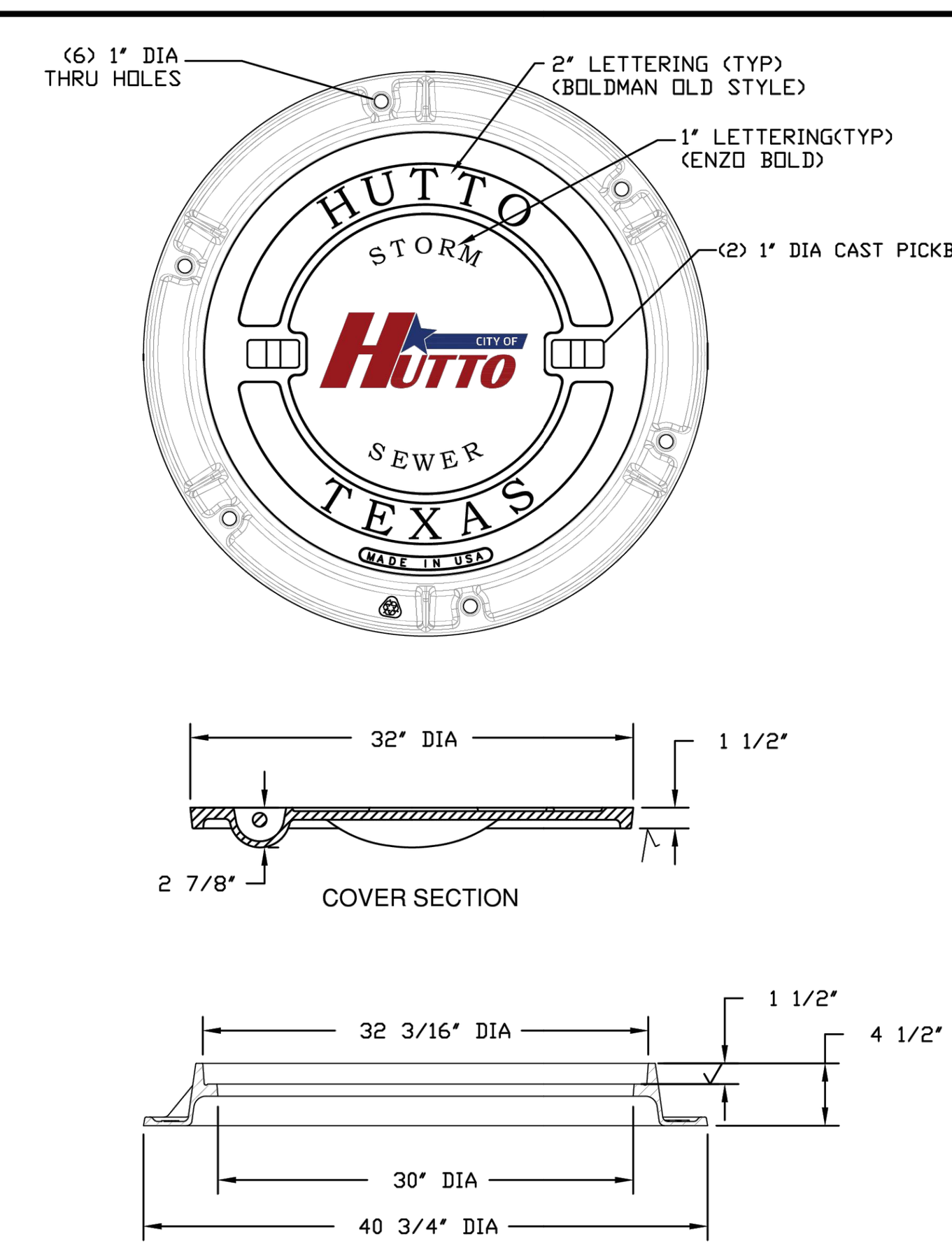

NOTES:
1. STANDARD STORMSEWER MANHOLE SET TO BE EAST JORDAN IRON WORKS, INC. CATALOG NO. V1420RG/V1432-3DI, OR APPROVED EQUAL. COVER TO BE STAMPED "STORM SEWER."
2. STANDARD STORMSEWER MANHOLE SET TO BE HEAVY DUTY LOAD RATED.
3. FOR MORE DETAILED SPECIFICATIONS, REFER TO EAST JORDAN IRON WORKS, INC. REFERENCE PRODUCT DRAWINGS 41432105A01 AND 41432105.
4. MANHOLE COVER TO BE DUCTILE IRON PER ASTM A536 (70-50-05). SEE EAST JORDAN IRON WORKS, INC. CATALOG NO. V1432-3.
5. MANHOLE FRAME TO BE GRAY IRON PER ASTM A48 CL35B.

The City of Hutto Construction Standards and Details	CURRENT AS OF 10/01/2023	STANDARD STORM SEWER MANHOLE SET
CITY OF HUTTO	THE ARCHITECT/ENGINEER ASSUMES RESPONSIBILITY FOR APPROPRIATE USE OF THIS STANDARD.	STANDARD NO. CH-SD-06

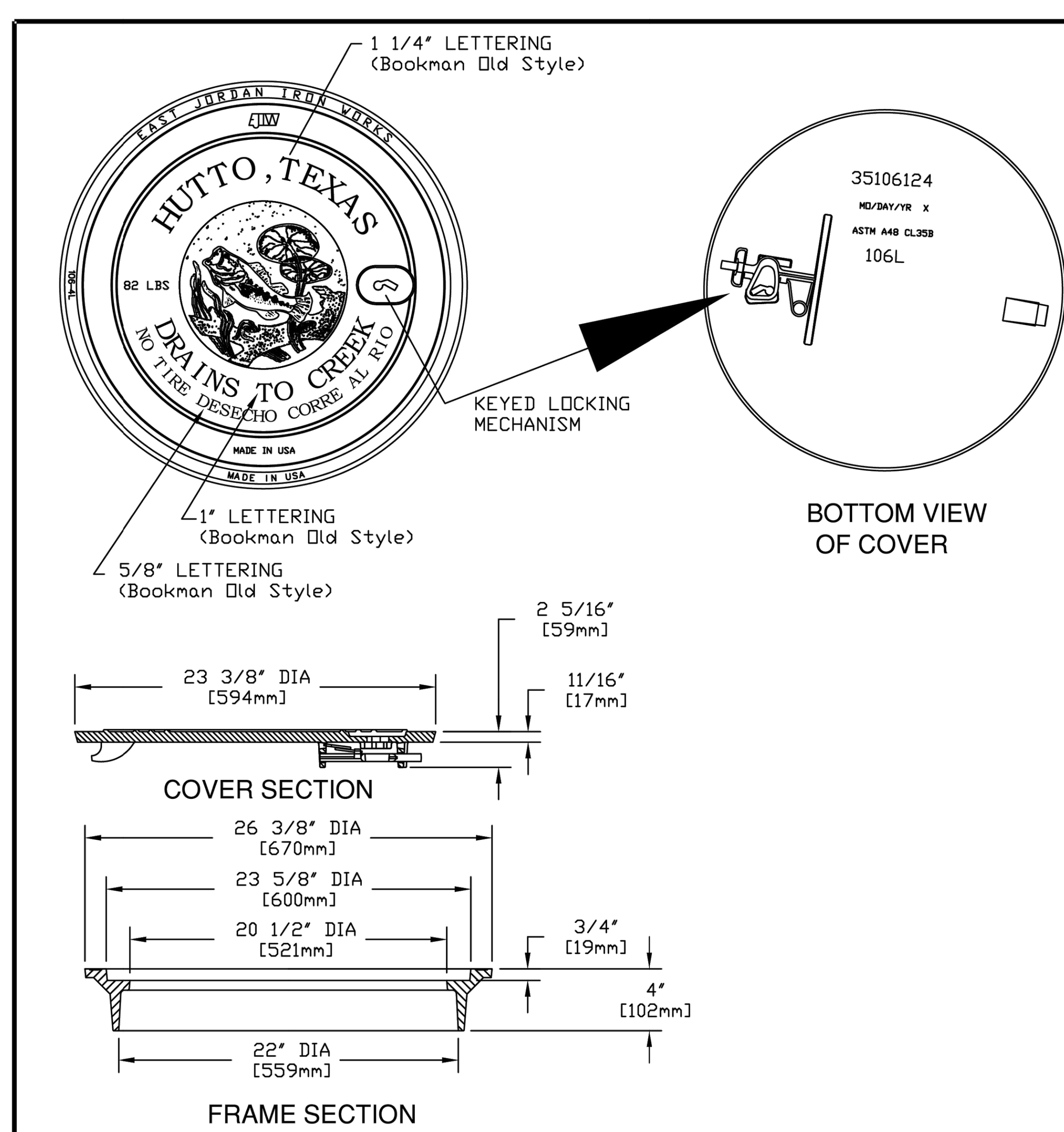

NOTES:
1. STANDARD CURB INLET LID SET TO BE EAST JORDAN IRON WORKS, INC. CATALOG NO. 106-4L OR APPROVED EQUAL.
2. FOR MORE DETAILED SPECIFICATIONS, REFER TO EAST JORDAN IRON WORKS, INC. REFERENCE PRODUCT DRAWING 35506124.
3. CURB INLET LID AND FRAME TO BE GRAY IRON PER ASTM A48 CL35B.

The City of Hutto Construction Standards and Details	CURRENT AS OF 10/01/2023	STANDARD CURB INLET LID
CITY OF HUTTO	THE ARCHITECT/ENGINEER ASSUMES RESPONSIBILITY FOR APPROPRIATE USE OF THIS STANDARD.	STANDARD NO. CH-SD-07

FOR OFFICIAL USE ONLY
Reviewed for Substantial Conformance by City of Hutto
Matt Rector, P.E.
City Engineer
Engineering - City of Hutto
10/01/2024

GRAY ENGINEERING
8834 N. Capital of Texas Hwy.
Suite 140
Austin, Texas 78759
(512)452-0371
FAX(512)454-9933
TBPELS FIRM #2946

NO.	BY	DATE	REVISION DESCRIPTION
			RECORD ONLY

LIDELL WALKER PHASE 2B

STORM SEWER DETAILS (1 OF 5)

PROJECT NO: 1725-11738
DESIGNED BY: ARS
DRAWN BY: ARS
CHECKED BY: TMH

NOTICE:
ALTERATION OF A SEALED DRAWING WITHOUT PROPER NOTIFICATION TO THE RESPONSIBLE ENGINEER IS A VIOLATION OF THE TEXAS ENGINEERING PRACTICE ACT.

STATE OF TEXAS
AUSTIN R. SEIFERT
137175
LICENSED PROFESSIONAL ENGINEER
07/29/2024

SHEET 37 OF 52

LIDELL WALKER PHASE 2B
PROJECT NO: 2157-ENG

H:\PROJECTS\1725 - GRBK EDGEWOOD LLC\LIDELL WALKER PHASE 2B\CAD\SHEETS\11738-C-DETL.DWG DATE: 7/29/2024 9:39:44 AM BY: ASEIFERT

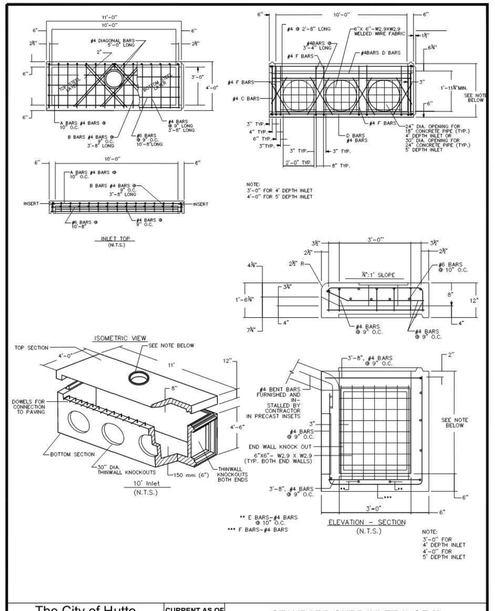

The City of Hutto
Construction Standards and Details

CURRENT AS OF 10/01/2023

STANDARD CURB INLET (1 OF 2)

THE ARCHITECT/ENGINEER ASSUMES RESPONSIBILITY FOR APPROPRIATE USE OF THIS STANDARD.

STANDARD NO. CH-SD-08

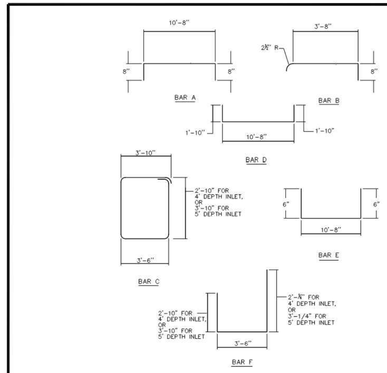

NOTES:
1. ALL CONCRETE SHALL BE CLASS "A".
2. ALL REINFORCING STEEL SHALL BE GRADE 60
3. DIMENSIONS RELATING TO REINFORCING STEEL ARE TO CENTERS OF BARS.
4. IN AREAS OF CONFLICT BETWEEN REINFORCING STEEL, PIPES AND MANHOLE FRAME, THE REINFORCEMENT SHALL BE BENT OR ADJUSTED TO CLEAR AS DIRECTED BY THE ENGINEER.
5. PAYMENT FOR INLET AT THE CONTRACT PRICE SHALL INCLUDE THE TRANSITION CURB.
6. INVERT OF INLET SHALL BE SLOPED 1:20 WITH FILL CONCRETE BY CONTRACTOR, SHAPED AS "V" SECTION
7. WHEN PLACING PRECAST INLETS IN SERIES TO CREATE A 15'–0" OR 20'–0" CURB INLET, THE CONNECTION BETWEEN INLET BOXES SHALL BE SOIL TIGHT AND FULLY CONVEY THE PEAK DESIGN FLOW FROM THE UPSTREAM INLET(S). THE 1:20 INVERT SLOPE DESCRIBED IN NOTE 6 OF THIS DETAIL SHALL EXTEND FROM THE MOST DOWNSTREAM POINT TO THE MOST UPSTREAM OF THE CONNECTED INLET BOXES. AT NO TIME CAN MORE THAN 20–LF OF CURB OPENING BE CONNECTED TO A MAIN STORM DRAIN LINE WITH ONE LATERAL STORM DRAIN CONNECTION.
8. REINFORCED CONCRETE PIPE (RCP) CLASS III OR OTHER APPROVED CLASS SHALL ONLY ENTER THE INLET IN THE KNOCKOUT LOCATIONS. OTHER MODIFICATIONS OR ENTRY POINTS ARE NOT APPROVED AND MAY RESULT IN REQUIRED REPLACEMENT OF ENTIRE INLET.

The City of Hutto
Construction Standards and Details

CURRENT AS OF 10/01/2023

STANDARD CURB INLET (2 OF 2)

THE ARCHITECT/ENGINEER ASSUMES RESPONSIBILITY FOR APPROPRIATE USE OF THIS STANDARD.

STANDARD NO. CH-SD-08

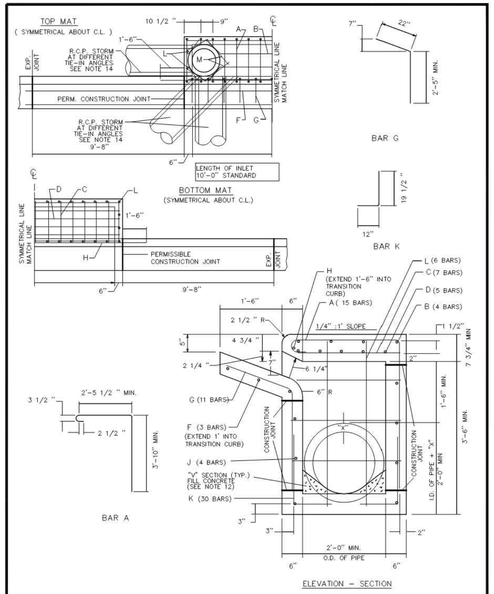

The City of Hutto
Construction Standards and Details

CURRENT AS OF 10/01/2023

STANDARD CURB INLET (1 OF 2)

THE ARCHITECT/ENGINEER ASSUMES RESPONSIBILITY FOR APPROPRIATE USE OF THIS STANDARD.

STANDARD NO. CH-SD-09

TABLE OF QUANTITIES
FOR 18" OUTLET PIPE
REINFORCING STEEL QUANTITIES

BARS	SIZE	SPACING	NUMBER	LENGTH	WEIGHT
A	4	9"*	15	7'–0"	73
B	4	10"	4	10'–8"	29
C	4	18"	7	2'–6"	12
D	6	6"	5	10'–8"	80
E	4	12"	6	2'–6"	10
F	4	10"	3	13'–0"	35
G	4	12"	11	4'–3"	31
H	6	—	1	14'–0"	20
J	4	12"	7	10'–8"	50
K	4	9"*	30	2'–7 1/2"	52
L	4	12"*	6	4'–4"	17
M	4	—	4	1'–8" AVG	4
TOTAL STEEL, LB.					413
TOTAL CONCRETE, C.Y.					4.06
* EXCEPT AS SHOWN ON PLAN					

NOTES:
1. ALL CONCRETE SHALL BE CLASS "A".
2. ALL REINFORCING STEEL SHALL BE GRADE 60
3. DIMENSIONS RELATING TO REINFORCING STEEL ARE TO CENTERS OF BARS.
4. VERTICAL STEEL MAY BE SPLICED (15" MIN. LAP) IN THE LOWER ONE–HALF OF ALL INLET WALLS.
5. IN AREAS OF CONFLICT BETWEEN REINFORCING STEEL, PIPES AND MANHOLE FRAME, THE REINFORCEMENT SHALL BE BENT OR ADJUSTED TO CLEAR AS DIRECTED BY THE ENGINEER.
6. QUANTITIES SHOWN HEREON ARE FOR THE CONTRACTOR'S INFORMATION ONLY. PAYMENT WILL BE MADE FOR EACH INLET OF THE TYPE SPECIFIED, COMPLETE IN PLACE INCLUDING MANHOLE FRAME AND OVER.
7. CHAMFER ALL EXPOSED EDGES 3/4 ".
8. MANHOLE FRAME AND COVER SHALL BE IN ACCORDANCE WITH CITY OF HUTTO STANDARD SD–07.
9. THE CONTRACTOR MAY PROPOSE ALTERNATE PROCEDURES FOR THE CONSTRUCTION OF INLETS, INCLUDING PRECAST UNITS. PLANS FOR SUCH PROPOSED ALTERNATES SHALL BE SUBMITTED TO THE ENGINEER FOR REVIEW AND APPROVAL BEFORE CONSTRUCTION.
10. ALL INLET WALLS SHALL BE FORMED EXCEPT WHERE THE NATURE OF THE SURROUNDING MATERIAL IS SUCH THAT IT CAN BE TRIMMED TO A SMOOTH VERTICAL FACE. WHEN INLET WALLS ARE PLACED TO NEAT EXCAVATION LINES THE WALL THICKNESS SHALL NOT EXCEED 10 INCHES.
11. PAYMENT FOR INLET AT THE CONTRACT PRICE SHALL INCLUDE THE TRANSITION CURB.
12. INVERT OF INLET SHALL BE SLOPED 1:20 WITH FILL CONCRETE, SHAPED AS "V" SECTION
13. NO SPLICING OF REINFORCING STEEL SHALL BE PERMITTED UNLESS OTHERWISE NOTED ON THE PLANS OR PERMITTED IN WRITING BY THE ENGINEER.
14. RCP STORM SHALL ONLY ENTER INLET AT DEFINED KNOCKOUT LOCATIONS. OBSCURE ANGLES OR ENTRIES THAT REQUIRE MODIFICATION OF THE STRUCTURE MUST BE APPROVED IN WRITING PRIOR TO WORK OTHERWISE THE STRUCTURE MAY BE REJECTED AND REPLACED.

The City of Hutto
Construction Standards and Details

CURRENT AS OF 10/01/2023

STANDARD CURB INLET (2 OF 2)

THE ARCHITECT/ENGINEER ASSUMES RESPONSIBILITY FOR APPROPRIATE USE OF THIS STANDARD.

STANDARD NO. CH-SD-09

MINIMUM RIP–RAP QUANTITIES	
PIPE	SQ. YDS.
18"	6.2
24"	6.9
27"	7.8
30"	9.5
36"	10.4
42"	12.0
48"	14.3
54"	16.4

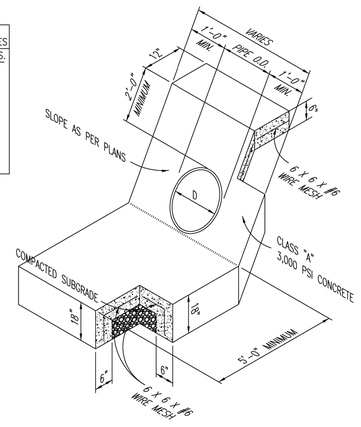

NOTES:
1. WHEN HEADWALLS AND WINGWALLS ARE REQUIRED, THEY SHALL CONFORM TO THE TEXAS DEPARTMENT OF TRANSPORTATION STANDARDS, OR AS DIRECTED BY THE CITY.
2. ENERGY DISSIPATERS SHALL BE REQUIRED IF PIPE VELOCITY IS GREATER THAN 5.0 F.P.S. OR AS DIRECTED BY THE CITY OF HUTTO.
3. SUPPORT REINFORCING WIRE MESH REQUIRED AS SUPPORT FOR APPROACH SLAB AND SHALL BE SUPPORTED BY REBAR CHAIRS OR OTHER APPROVED METHODS.

The City of Hutto
Construction Standards and Details

CURRENT AS OF 10/01/2023

TYPICAL CONCRETE RIPRAP AT PIPE

THE ARCHITECT/ENGINEER ASSUMES RESPONSIBILITY FOR APPROPRIATE USE OF THIS STANDARD.

STANDARD NO. CH-SD-10

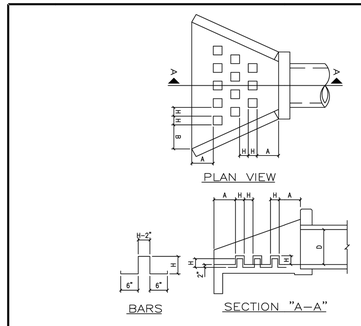

NOTES:
1. USE CLASS "A" CONCRETE, 3,000 PSI AT 28 DAYS, UNLESS NOTED.
2. REINFORCING STEEL – ASTM A615, GRADE 40, UNLESS NOTED.
3. LAP REINFORCING 30 BAR DIAMETERS MIN. AT SPLICES, UNLESS NOTED.
4. CHAMFER EXPOSED EDGES OF CONCRETE 3/4", UNLESS NOTED.
5. PLACE REINFORCING WITH THE CENTER OF THE OUTSIDE BARS 2 INCHES FROM THE SURFACE OF THE CONCRETE.

TABLE OF DIMENSIONS FOR ENERGY DISSIPATOR DETAIL

D PIPE DIAMETER (INCHES)	NUMBER OF ROWS OF DISSIPATORS	NUMBER OF DISSIPATORS IN FRONT ROW	H (INCHES)	A (INCHES)	B (INCHES)
12	1	3	4	4	9.1875
18	2	4	4 1/2	9 1/2	15.5625
24	2	5	6	14 3/4	16 1/2
30	3	6	7 1/2	12 1/2	14 3/8
36	3	6	9	16 1/4	18 5/16
42	3	6	10 1/2	20	22 1/4
48	3	6	12	23 3/4	26 1/4
54	3	6	13 1/2	27 1/2	27 3/4
60	3	6	15	31 1/4	31 5/8

The City of Hutto
Construction Standards and Details

CURRENT AS OF 10/01/2023

ENERGY DISSIPATOR

THE ARCHITECT/ENGINEER ASSUMES RESPONSIBILITY FOR APPROPRIATE USE OF THIS STANDARD.

STANDARD NO. CH-SD-11

8834 N. Capital of Texas Hwy.
Suite 140
Austin, Texas 78759
(512)452-0371
FAX(512)454-9933
TBPELS FIRM #2946

GRAY ENGINEERING

NO.	BY	DATE	REVISION DESCRIPTION
			RECORD ONLY

LIDELL WALKER PHASE 2B

STORM SEWER DETAILS (2 OF 5)

PROJECT NO: 1725-11738

DESIGNED BY: ARS

DRAWN BY: TMH

CHECKED BY: TMH

NOTICE:
ALTERATION OF A SEALED DRAWING WITHOUT PROPER NOTIFICATION TO THE RESPONSIBLE ENGINEER IS A VIOLATION OF THE TEXAS ENGINEERING PRACTICE ACT.

STATE OF TEXAS
AUSTIN R. SEIFERT
137175
LICENSED PROFESSIONAL ENGINEER
07/29/2024

FOR OFFICIAL USE ONLY

Reviewed for Substantial Conformance by City of Hutto

Matt Rector, P.E.
City Engineer
Engineering - City of Hutto

10/01/2024

SHEET 38 OF 52

PROJECT NO: 2157-ENG LIDELL WALKER PHASE 2B

H:\PROJECTS\1725 - GRBK EDGEWOOD LLC\LIDELL WALKER PHASE 2B\CAD\SHEETS\11738-C-DETL.DWG DATE: 7/29/2024 9:39:47 AM BY: ASEIFERT

DISCLAIMER:
The use of this standard is governed by the "Texas Engineering Practice Act". No warranty of any kind is made by TxDOT for any purpose whatsoever. TxDOT assumes no responsibility for the selection of this standard to other standard or for incorrect results or sufficiency of their use.

DATE:
FILE:

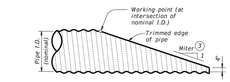

NOTE: All pipe runners, calculations, and dimensions are based on the pipe culverts mitered as shown in this detail. Alternate styles of mitered ends will require that appropriate adjustments be made to the values presented on this standard.

SIDE ELEVATION OF TYPICAL PIPE CULVERT MITER

(Showing corrugated metal pipe (CMP) culvert. Details of reinforced concrete pipe (RCP) culvert are similar.)

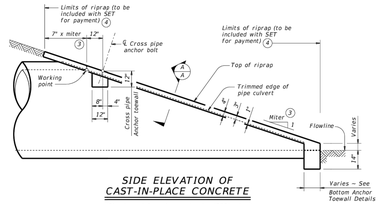

SIDE ELEVATION OF CAST-IN-PLACE CONCRETE

(Showing reinforced concrete pipe (RCP) culvert. Details of corrugated metal pipe (CMP) culvert are similar. Pipe runners not shown for clarity)

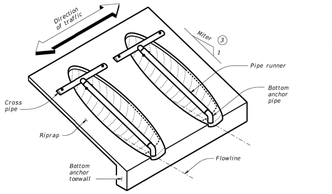

ISOMETRIC VIEW OF TYPICAL INSTALLATION

(Showing installation with no skew.)

CROSS PIPE LENGTHS AND PIPE RUNNER LENGTHS 1 2

Nominal Culvert I.D.	Pipe Culvert Spa – G	Cross Pipe Length	Pipe Runner Length											
			3:1 Side Slope				4:1 Side Slope				6:1 Side Slope			
			0° Skew	15° Skew	30° Skew	45° Skew	0° Skew	15° Skew	30° Skew	45° Skew	0° Skew	15° Skew	30° Skew	45° Skew
24"	1' – 7"	3' – 5"	N/A	N/A	N/A	5' – 10"	N/A	N/A	N/A	8' – 1"	N/A	N/A	N/A	12' – 9"
27"	1' – 8"	3' – 8"	N/A	N/A	5' – 5"	6' – 11"	N/A	N/A	7' – 7"	9' – 7"	N/A	N/A	11' – 11"	14' – 11"
30"	1' – 10"	3' – 11"	N/A	N/A	6' – 4"	8' – 0"	N/A	N/A	8' – 9"	11' – 0"	N/A	N/A	13' – 8"	17' – 0"
33"	1' – 11"	4' – 2"	6' – 2"	6' – 5"	7' – 3"	9' – 1"	8' – 6"	8' – 10"	10' – 0"	12' – 5"	13' – 3"	13' – 9"	15' – 5"	19' – 2"
36"	2' – 1"	4' – 5"	6' – 11"	7' – 3"	8' – 2"	10' – 2"	9' – 6"	9' – 11"	11' – 2"	13' – 10"	14' – 9"	15' – 3"	17' – 2"	21' – 3"
42"	2' – 4"	4' – 11"	8' – 6"	8' – 10"	9' – 11"	12' – 4"	11' – 7"	12' – 0"	13' – 6"	16' – 8"	17' – 9"	18' – 5"	20' – 8"	25' – 7"
48"	2' – 7"	5' – 5"	10' – 1"	10' – 5"	11' – 9"	N/A	13' – 7"	14' – 2"	15' – 10"	N/A	20' – 9"	21' – 6"	24' – 2"	N/A
54"	3' – 0"	5' – 11"	11' – 8"	12' – 1"	N/A	N/A	15' – 8"	16' – 3"	N/A	N/A	23' – 10"	24' – 8"	N/A	N/A
60"	3' – 3"	6' – 5"	13' – 3"	N/A	N/A	N/A	17' – 9"	N/A	N/A	N/A	26' – 10"	N/A	N/A	N/A

TYPICAL PIPE CULVERT MITERS 3

Side Slope	0° Skew	15° Skew	30° Skew	45° Skew
3:1	3:1	3.106:1	3.464:1	4.243:1
4:1	4:1	4.141:1	4.619:1	5.657:1
6:1	6:1	6.212:1	6.928:1	8.485:1

CONDITIONS WHERE PIPE RUNNERS ARE NOT REQUIRED 2

Nominal Culvert I.D.	Single Pipe Culvert	Multiple Pipe Culverts
12" thru 21"	Skews thru 45°	Skews thru 45°
24"	Skews thru 45°	Skews thru 30°
27"	Skews thru 30°	Skews thru 15°
30"	Skews thru 15°	Skews thru 15°
33"	Skews thru 15°	Always required
36"	Normal (no skew)	Always required
42" thru 60"	Always required	Always required

STANDARD PIPE SIZES AND MAX PIPE RUNNER LENGTHS 1

Pipe Size	Pipe O.D.	Pipe I.D.	Max Pipe Runner Length
2" STD	2.375"	2.067"	N/A
3" STD	3.500"	3.068"	10' – 0"
4" STD	4.500"	4.026"	19' – 8"
5" STD	5.563"	5.047"	34' – 2"

ESTIMATED CONCRETE RIPRAP QUANTITIES (CY) 5

Nominal Culvert I.D.	3:1 Side Slope				4:1 Side Slope				6:1 Side Slope			
	0° Skew	15° Skew	30° Skew	45° Skew	0° Skew	15° Skew	30° Skew	45° Skew	0° Skew	15° Skew	30° Skew	45° Skew
12"	0.4	0.4	0.5	0.5	0.5	0.5	0.5	0.6	0.7	0.7	0.7	0.8
15"	0.5	0.5	0.5	0.6	0.6	0.6	0.6	0.7	0.7	0.7	0.8	0.9
18"	0.5	0.5	0.6	0.6	0.6	0.7	0.7	0.8	0.8	0.8	0.9	1.0
21"	0.6	0.6	0.6	0.7	0.7	0.7	0.8	0.9	0.9	0.9	1.0	1.2
24"	0.6	0.7	0.7	0.8	0.8	0.8	0.8	1.0	1.0	1.0	1.1	1.3
27"	0.7	0.7	0.8	0.9	0.8	0.9	0.9	1.1	1.1	1.1	1.2	1.4
30"	0.8	0.8	0.8	0.9	0.9	0.9	1.0	1.2	1.2	1.2	1.3	1.6
33"	0.8	0.8	0.9	1.0	1.0	1.0	1.1	1.3	1.3	1.4	1.5	1.7
36"	0.9	0.9	0.9	1.1	1.1	1.1	1.2	1.4	1.4	1.5	1.6	1.8
42"	1.0	1.0	1.1	1.3	1.2	1.3	1.3	1.6	1.6	1.7	1.8	2.1
48"	1.1	1.1	1.2	N/A	1.4	1.4	1.5	N/A	1.9	1.9	2.1	N/A
54"	1.3	1.3	N/A	N/A	1.6	1.6	N/A	N/A	2.1	2.1	N/A	N/A
60"	1.4	N/A	N/A	N/A	1.7	N/A	N/A	N/A	2.3	N/A	N/A	N/A

1) Provide pipe runner of the size shown in the tables. Provide cross pipe of the same size as the pipe runner. Provide cross pipe stub out and bottom anchor pipe of the next smaller size pipe as shown in the Standard Pipe Sizes and Max Pipe Runner Lengths table.

2) This standard allows for the placement of only one pipe runner across each culvert pipe opening. In order to limit the clear opening to be traversed by an errant vehicle, the following conditions must be met:

For 60" culvert pipes, the skew must not exceed 0°.
For 54" culvert pipes, the skew must not exceed 15°.
For 48" culvert pipes, the skew must not exceed 30°.
For all culvert pipe sizes 42" and less, the skew must not exceed 45°.

If the above conditions cannot be met, the designer should consider using a safety end treatment with flared wings. For further information, refer to the TxDOT Roadway Design Manual.

3) Miter = slope of mitered end of pipe culvert.

4) Riprap placed beyond the limits shown will be paid for as concrete riprap in accordance with Item 432, "Riprap."

5) Quantities shown are for one end of one reinforced concrete pipe (RCP) culvert. For multiple pipe culverts or for corrugated metal pipe (CMP) culverts, quantities will need to be adjusted. Riprap quantities are for Contractor's information only.

SHEET 1 OF 2

Texas Department of Transportation | Bridge Division Standard

SAFETY END TREATMENT FOR 12" DIA TO 60" DIA PIPE CULVERTS TYPE II ~ CROSS DRAINAGE

SETP-CD

FILE: CD-SETP-CD-20.dgn	DN: GAF	CK: CAT	DW: JRP	CK: GAF
©TxDOT February 2020	CONT	SECT	JOB	HIGHWAY
REVISIONS	DIST	COUNTY		SHEET NO.

DISCLAIMER:
The use of this standard is governed by the "Texas Engineering Practice Act". No warranty of any kind is made by TxDOT for any purpose whatsoever. TxDOT assumes no responsibility for the selection of this standard to other standard or for incorrect results or sufficiency of their use.

DATE:
FILE:

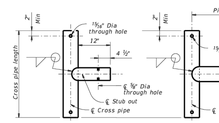

OPTION A1 OPTION A2

CROSS PIPE AND CONNECTIONS DETAILS

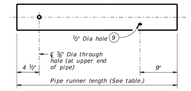

NOTE: The separate pipe runner shown is required when Cross Pipe Connection Option A1 is used.

PIPE RUNNER DETAILS

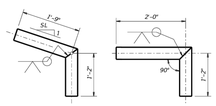

OPTION B1 OPTION B2

BOTTOM ANCHOR PIPE DETAILS 10

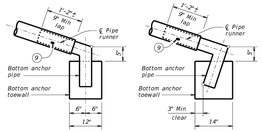

OPTION B1 OPTION B2

BOTTOM ANCHOR TOEWALL DETAILS

(Culvert and riprap not shown for clarity.)

4) Riprap placed beyond the limits shown will be paid for as concrete riprap in accordance with Item 432, "Riprap."

6) Recommended values of side slope are 3:1, 4:1, and 6:1. All quantities, calculations, and dimensions shown herein are based on these recommended values. Use of 3:1 or flatter is required for vehicle safety.

7) Note that actual slope of pipe runner may vary slightly from side slope of riprap and trimmed culvert pipe edge.

8) Ensure that riprap concrete does not flow into the cross pipe so as to permit disassembly of the bolted connection to allow cleanout access.

9) After installation, inspect the ½" hole to ensure that the lap of the pipe runner with the bottom anchor pipe is adequate.

10) At fabricator's option, a heat bend to a smooth 5" radius or a manufactured elbow (of the same material as the runner) may be substituted for the mitered and welded joint in the bottom anchor pipe.

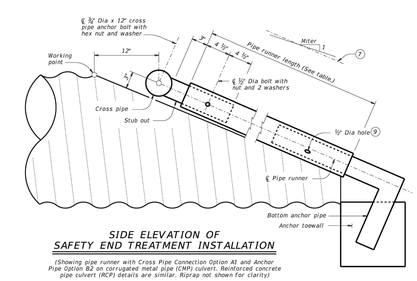

SIDE ELEVATION OF SAFETY END TREATMENT INSTALLATION

(Showing pipe runner with Cross Pipe Connection Option A1 and Anchor Pipe Option B2 on corrugated metal pipe (CMP) culvert. Reinforced concrete pipe culvert (RCP) details are similar. Riprap not shown for clarity)

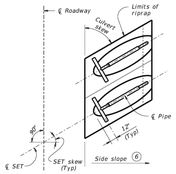

PLAN OF SKEWED INSTALLATION

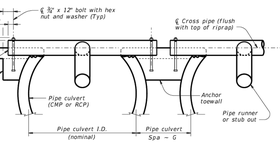

SHOWING CROSS PIPE AND ANCHOR TOEWALL

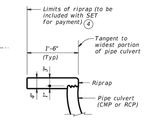

SHOWING TYPICAL PIPE CULVERT AND RIPRAP

SECTION A-A

MATERIAL NOTES:

Synthetic fibers listed on the "Fibers for Concrete" Material Producer List (MPL) may be used in lieu of steel reinforcing in riprap concrete unless noted otherwise.

Provide pipe runners, cross pipes, and anchor pipes conforming to the requirements of ASTM A53 (Type E or S, Gr B), ASTM A500 Gr B, or ASTM A252.

Provide ASTM A307 bolts and nuts.

Galvanize all steel components, except concrete reinforcing, after fabrication.

Repair galvanizing damaged during transport or construction in accordance with the specifications.

GENERAL NOTES:

Pipe runners are designed for a traversing load of 1,800 pounds at yield as recommended by Research Report 280-1, "Safety Treatment of Roadside Cross-Drainage Structures", Texas Transportation Institute, March 1981.

Safety end treatments (SET) shown herein are intended for use in those installations where culvert velocities are unlikely to reverse the flowlines approximately perpendicular to the pipe runner.

Payment for riprap and toewall is included in the price bid for each safety end treatment.

Construct concrete riprap and all necessary inverts in accordance with the requirements of Item 432, "Riprap."

SHEET 2 OF 2

Texas Department of Transportation | Bridge Division Standard

SAFETY END TREATMENT FOR 12" DIA TO 60" DIA PIPE CULVERTS TYPE II ~ CROSS DRAINAGE

SETP-CD

FILE: CD-SETP-CD-20.dgn	DN: GAF	CK: CAT	DW: JRP	CK: GAF
©TxDOT February 2020	CONT	SECT	JOB	HIGHWAY
REVISIONS	DIST	COUNTY		SHEET NO.

DISCLAIMER:
The use of this standard is governed by the "Texas Engineering Practice Act". No warranty of any kind is made by TxDOT for any purpose whatsoever. TxDOT assumes no responsibility for the selection of this standard to other standard or for incorrect results or sufficiency of their use.

DATE:
FILE:

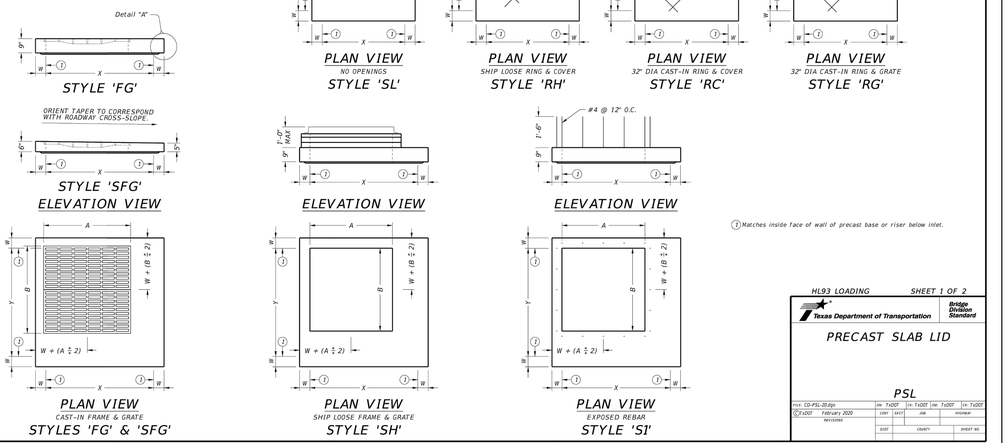

3) Matches inside face of wall of precast base or riser below inlet.

HL93 LOADING SHEET 1 OF 2

Texas Department of Transportation | Bridge Division Standard

PRECAST SLAB LID

PSL

FILE: CD-PSL-20.dgn	DN: TxDOT	CK: TxDOT	DW: TxDOT	CK: TxDOT
©TxDOT February 2020	CONT	SECT	JOB	HIGHWAY
REVISIONS	DIST	COUNTY		SHEET NO.

8834 N. Capital of Texas Hwy.
Suite 140
Austin, Texas 78759
(512)452-0371
FAX(512)454-9933
TBPELS FIRM #2946

GRAY ENGINEERING

NO.	BY	DATE	REVISION DESCRIPTION
			RECORD ONLY

LIDELL WALKER PHASE 2B

STORM SEWER DETAILS (3 OF 5)

PROJECT NO: 1725-11738

DESIGNED BY: ARS

DRAWN BY: ARS

CHECKED BY: TMH

NOTICE:
ALTERATION OF A SEALED DRAWING WITHOUT PROPER NOTIFICATION TO THE RESPONSIBLE ENGINEER IS A VIOLATION OF THE TEXAS ENGINEERING PRACTICE ACT.

STATE OF TEXAS
AUSTIN R. SEIFERT
137175
LICENSED PROFESSIONAL ENGINEER
07/29/2024

FOR OFFICIAL USE ONLY

Reviewed for Substantial Conformance by City of Hutto

CITY OF HUTTO

Matt Rector, P.E.
City Engineer
Engineering - City of Hutto

10/01/2024

SHEET 39 OF 52

PROJECT NO: 2157-ENG LIDELL WALKER PHASE 2B

H:\PROJECTS\1725 - GRBK EDGEWOOD LLC\LIDELL WALKER PHASE 2B\CAD\SHEETS\11738-C-DETL.DWG DATE: 7/29/2024 9:39:52 AM BY: ASEIFERT

Style	Size (X x Y)	W (2)	A x B (nominal)	Short Span Reinf Steel Area	Long Span Reinf Steel Area
SL	3'x3'	6"	n/a	0.37 in²/ft	0.37 in²/ft
RH,RC,RG,SH,S1,FG	3'x3'	6"	3'x3' or 32" Dia	0.37 in²/ft	0.37 in²/ft
SFG	3'x3'	6"	3'x3'	0.32 in²/ft	0.32 in²/ft
SL	4'x4'	6"	n/a	0.34 in²/ft	0.34 in²/ft
RH,RC,RG,SH,S1,FG	4'x4'	6"	3'x3' or 32" Dia	0.41 in²/ft	0.41 in²/ft
SH,S1,FG	4'x4'	6"	4'x4'	0.41 in²/ft	0.41 in²/ft
SFG	4'x4'	6"	4'x4'	0.32 in²/ft	0.32 in²/ft
SL	3'x5'	6"	n/a	0.39 in²/ft	0.39 in²/ft
RH,RC,RG,SH,S1,FG	3'x5'	6"	3'x3' or 32" Dia	0.48 in²/ft	0.48 in²/ft
SH,S1,FG	3'x5'	6"	3'x5'	0.48 in²/ft	0.48 in²/ft
SFG	3'x5'	6"	3'x5'	0.32 in²/ft	0.32 in²/ft
SL	4'x5'	6"	n/a	0.42 in²/ft	0.42 in²/ft
RH,RC,RG,SH,S1,FG	4'x5'	6"	3'x3' or 32" Dia	0.42 in²/ft	0.42 in²/ft
SH,S1,FG	4'x5'	6"	4'x4'	0.63 in²/ft	0.63 in²/ft
SH,S1,FG	4'x5'	6"	3'x5'	0.66 in²/ft	0.66 in²/ft
SL	5'x5'	6"	n/a	0.36 in²/ft	0.36 in²/ft
RH,RC,RG,SH,S1,FG	5'x5'	6"	3'x3' or 32" Dia	0.43 in²/ft	0.43 in²/ft
SH,S1,FG	5'x5'	6"	4'x4'	0.63 in²/ft	0.63 in²/ft
SH,S1,FG	5'x5'	6"	3'x5'	0.63 in²/ft	0.63 in²/ft
SL	5'x6'	6"/8"	n/a	0.48 in²/ft	0.48 in²/ft
RH,RC,RG,SH,S1,FG	5'x6'	6"/8"	3'x3' or 32" Dia	0.48 in²/ft	0.48 in²/ft
SH,S1,FG	5'x6'	6"/8"	4'x4'	0.60 in²/ft	0.60 in²/ft
SH,S1,FG	5'x6'	6"/8"	3'x5'	0.60 in²/ft	0.60 in²/ft
SL	6'x6'	6"/8"	n/a	0.43 in²/ft	0.43 in²/ft
RH,RC,RG,SH,S1,FG	6'x6'	6"/8"	3'x3' or 32" Dia	0.56 in²/ft	0.56 in²/ft
SH,S1,FG	6'x6'	6"/8"	4'x4'	0.56 in²/ft	0.56 in²/ft
SH,S1,FG	6'x6'	6"/8"	3'x5'	0.59 in²/ft	0.59 in²/ft
SL	8'x8'	8"/10"	n/a	0.45 in²/ft	0.45 in²/ft
RH,RC,RG,SH,S1,FG	8'x8'	8"/10"	3'x3' or 32" Dia	0.45 in²/ft	0.45 in²/ft
SH,S1,FG	8'x8'	8"/10"	4'x4'	0.45 in²/ft	0.45 in²/ft
SH,S1,FG	8'x8'	8"/10"	3'x5'	0.45 in²/ft	0.45 in²/ft

(2) See sheet PDD for corresponding wall thickness (W) of base unit or riser.

DISCLAIMER:
The use of this standard is governed by the "Texas Engineering Practice Act". No warranty of any kind is made by TxDOT for any purpose whatsoever. TxDOT assumes no responsibility for the completion of this standard or for errors or omissions in designs resulting from its use.

Construct cast-in-place reinforced concrete apron, when shown elsewhere in plans. Use Class "A" concrete. Apron is subsidiary to PSL. Apron is 1'-6" Min width around precast zone drain.

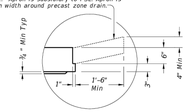

DETAIL "A"

(Reinforcing not shown for clarity)

When an apron is to be cast around PSL, use detail above to create an apron ledge on all 4 sides.

FABRICATION NOTES:
1. Locate penetration (Style 'RH'), ring and cover (Style 'RC'), ring and grate (Style 'RG'), and frame and grate (Style 'FG') in a corner. Only one penetration is allowed per slab lid.
2. Provide Class "H" concrete in accordance with Item 421 and having a minimum compressive strength of 5,000 psi.
3. Provide Grade 60 reinforcing steel or equivalent area of WWR.
4. Provide 2" clear cover from edge of opening from lower outside shoulder of slab for structural reinforcement, and 2" from top of slab for shrinkage and temperature reinforcement. Place short span reinforcing closest to surface.
5. Slabs with a thickness of 8" or greater require shrinkage and temperature reinforcing. Provide steel area = 0.11 in²/ft each way.
6. No substitution is allowed for diagonal #4 bars around openings.
7. Design tongue and groove joints for full closure on both shoulders. Minimum spigot depth is ¾".
8. Provide lifting devices in conformance with Manufacturer's recommendations.

INSTALLATION NOTES:
1. Precast slab lids are intended for direct traffic and may be placed in roadway.
2. Seal tongue and groove joints with preformed or bulk mastic in conformance with Manufacturer's recommendations. Tongue and groove joints may be grouted no more than 1" between each section, or ½ the joint depth, whichever is greater.
3. Do not grout rubber gasket joints without Manufacturer's recommendation.
4. Initial installation of grade adjustment rings for Styles 'RH' and 'SH' is limited to 1'-0" Max as shown.
5. Grade adjustment rings for Styles 'RH' and 'SH' may be increased to 2'-0" Max when future construction affects final grade of structure. Make adjustments greater than 2'-0" with additional risers. Adjustments can be made up to Max depth shown on sheet PDD. Structure must be evaluated if Max depth will be exceeded.
6. Orient long dimension of grate slots perpendicular to traffic, unless noted otherwise on plans.

GENERAL NOTES:
1. Designed according to ASTM C913.
2. Payment for lid is per Item 465, "Junction Boxes, Manholes, and Inlets" by type, style, size, and opening size (when applicable).

Cover dimensions are clear dimensions, unless noted otherwise.

HL93 LOADING — SHEET 2 OF 2

Texas Department of Transportation — Bridge Division Standard

PRECAST SLAB LID

PSL

FILE: CO-PSL-20.dgn	DN: TxDOT	CK: TxDOT	DW: TxDOT	CK: TxDOT
©TxDOT February 2020	CONT	SECT	JOB	HIGHWAY
REVISIONS	DIST	COUNTY		SHEET NO.

DATE:
FILE:

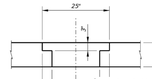

DETAIL "B"

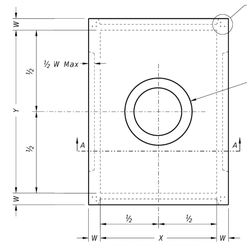

PLAN VIEW

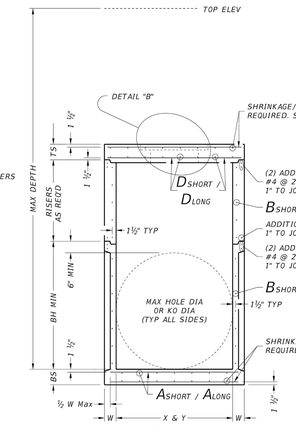

SECTION A-A

FABRICATION NOTES:
1. Provide Class "H" concrete in accordance with Item 421 and having a minimum compressive strength of 5,000 psi.
2. Provide Grade 60 reinforcing steel or equivalent area of WWR.
3. Provide typical clear cover of 1 ½" to reinforcing steel at interior or exterior walls.
4. Walls or slabs with a thickness of 8" or greater require shrinkage and temperature reinforcing steel. Provide steel area = 0.11 in²/ft each way.
5. No substitution is allowed for vertical and horizontal #4 bars in corners.
6. Manufacture base and risers to nearest 3" increment.
7. Design tongue and groove joints for full closure on both shoulders. Minimum spigot depth is ¾".
8. Provide lifting devices in conformance with Manufacturer's recommendations.
9. See sheet PDD for sizes, dimensions, and reinforcing steel not shown.
10. Provide hole in below grade slab only when PJB is installed with Inlet type PDD.

INSTALLATION NOTES:
1. Inverts (benching) to be provided by Contractor. Concrete or mortar used for invert is subsidiary to junction box.
2. Seal tongue and groove joints with preformed or bulk mastic in conformance with Manufacturer's recommendations. Tongue and groove joints may be grouted no more than 1" between each section, or ½ the joint depth, whichever is greater.
3. Do not grout rubber gasket joints without Manufacturer's recommendation.
4. For rigid pipe, cut hole in thin wall panel (KO) 4" Max, 2" Min larger than pipe OD.
5. For flexible pipe, consult boot/seal Manufacturer's specification for placement tolerance and hole size. Center pipe in hole and install boot/seal per Manufacturer's specification.

GENERAL NOTES:
1. Precast Junction Box consists of base slab, base unit, risers (as required), and below grade slab. See sheet PDD for sizes.
2. Designed according to ASTM C913.
3. Payment for junction box is per Item 465 "Junction Boxes, Manholes, and Inlets" by type and size.

Cover dimensions are clear dimensions, unless noted otherwise.

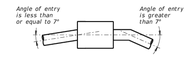

PIPE CONNECTION DETAIL

Connect pipes within 7° of normal to PJB wall. If necessary, use pipe elbow or curved approach alignment to stay within this limit.

HL93 LOADING

Texas Department of Transportation — Bridge Division Standard

PRECAST JUNCTION BOX

PJB

FILE: CO-PJB-20.dgn	DN: TxDOT	CK: TxDOT	DW: TxDOT	CK: TxDOT
©TxDOT February 2020	CONT	SECT	JOB	HIGHWAY
REVISIONS	DIST	COUNTY		SHEET NO.

DATE:
FILE:

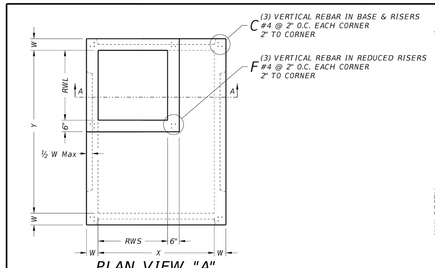

PLAN VIEW "A"

SQUARE REDUCED RISER OPTION

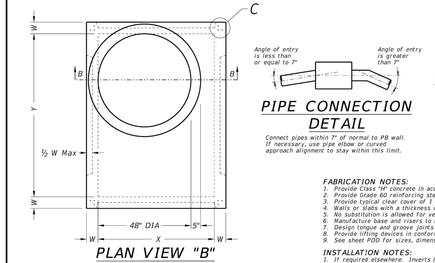

PLAN VIEW "B"

ROUND REDUCED RISER OPTION

PIPE CONNECTION DETAIL

Connect pipes within 7° of normal to PB wall. If necessary, use pipe elbow or curved approach alignment to stay within this limit.

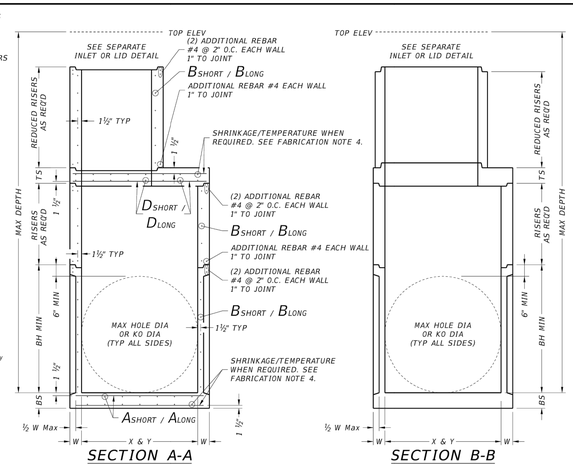

SECTION A-A

SQUARE REDUCED RISER OPTION

SECTION B-B

ROUND REDUCED RISER OPTION

FABRICATION NOTES:
1. Provide Class "H" concrete in accordance with Item 421 and having a minimum compressive strength of 5,000 psi.
2. Provide Grade 60 reinforcing steel or equivalent area of WWR.
3. Provide typical clear cover of 1 ½" to reinforcing steel at interior or exterior walls.
4. Walls or slabs with a thickness of 8" or greater require shrinkage and temperature reinforcing steel. Provide steel area = 0.11 in²/ft each way.
5. No substitution is allowed for vertical and horizontal #4 bars in corners.
6. Manufacture base and risers to nearest 3" increment.
7. Design tongue and groove joints for full closure on both shoulders. Minimum spigot depth is ¾".
8. Provide lifting devices in conformance with Manufacturer's recommendations.
9. See sheet PDD for sizes, dimensions, and reinforcing steel not shown.

INSTALLATION NOTES:
1. If required elsewhere. Inverts (benching) to be provided by Contractor. Concrete or mortar used for invert is subsidiary to specified inlet or manhole.
2. Seal tongue and groove joints with preformed or bulk mastic in conformance with Manufacturer's recommendations. Tongue and groove joints may be grouted no more than 1" between each section, or ½ the joint depth, whichever is greater.
3. Do not grout rubber gasket joints without Manufacturer's recommendation.
4. For rigid pipe, cut hole in thin wall panel (KO) 4" Max, 2" Min larger than pipe OD.
5. For flexible pipe, consult boot/seal Manufacturer's specification for placement tolerance and hole size. Center pipe in hole and install boot/seal per Manufacturer's specification.

GENERAL NOTES:
1. Precast Base consists of base slab, base unit, risers (as required), reducing slab (as required), and reduced risers (as required). See sheet PDD for sizes.
2. Designed according to ASTM C913.
3. Payment for precast base is subsidiary to the specified inlet, per Item 465, "Junction Boxes, Manholes, and Inlets."

Cover dimensions are clear dimensions, unless noted otherwise.

HL93 LOADING

Texas Department of Transportation — Bridge Division Standard

PRECAST BASE

PB

FILE: CO-PB-20.dgn	DN: TxDOT	CK: TxDOT	DW: TxDOT	CK: TxDOT
©TxDOT February 2020	CONT	SECT	JOB	HIGHWAY
REVISIONS	DIST	COUNTY		SHEET NO.

DATE:
FILE:

8834 N. Capital of Texas Hwy.
Suite 140
Austin, Texas 78759
(512)452-0371
FAX(512)454-9933
TBPELS FIRM #2946

GRAY ENGINEERING

NO.	BY	DATE	REVISION DESCRIPTION

RECORD ONLY

LIDELL WALKER PHASE 2B

STORM SEWER DETAILS (4 OF 5)

PROJECT NO: 1725-11738

DESIGNED BY: ARS

DRAWN BY: ARS

CHECKED BY: TMH

NOTICE:
ALTERATION OF A SEALED DRAWING WITHOUT PROPER NOTIFICATION TO THE RESPONSIBLE ENGINEER IS A VIOLATION OF THE TEXAS ENGINEERING PRACTICE ACT.

FOR OFFICIAL USE ONLY

Reviewed for Substantial Conformance by City of Hutto

Matt Reclisi, P.E.
City Engineer
Engineering - City of Hutto

10/01/2024

STATE OF TEXAS
AUSTIN R. SEIFERT
137175
LICENSED PROFESSIONAL ENGINEER
07/29/2024

SHEET 40 OF 52

PROJECT NO: 2157-ENG

LIDELL WALKER PHASE 2B

H:\PROJECTS\1725 - GRBK EDGEWOOD LLC\LIDELL WALKER PHASE 2B\CAD\SHEETS\11738-C-DETL.DWG DATE: 7/29/2024 9:39:57 AM BY: ASEIFERT

Size	MAX DEPTH = 15 ft. to top of BASE SLAB									MAX DEPTH = 25 ft. to top of BASE SLAB										Min Height (See Gen Note 3)	Max HOLE DIA (See P/JB Note 2)	Max KO DIA (See P/JB Note 2)
	Base Slab			Base Unit or Riser Walls			Below Grade Slab (w/PJB) Reducing Slab (w/PB)			Base Slab			Base Unit or Riser Walls			Below Grade Slab (w/PJB) Reducing Slab (w/PB)							
	Short Span Reinf Steel Area	Long Span Reinf Steel Area	Thickness	Short Span Reinf Steel Area	Long Span Pipe Area	Thickness	Reinforced Riser Size	Short Span Reinf Steel Area	Long Span Reinf Steel Area	Thickness	Short Span Reinf Steel Area	Long Span Reinf Steel Area	Thickness	Short Span Reinf Steel Area	Long Span Reinf Steel Area	Thickness	Reinforced Riser Size	Short Span Reinf Steel Area	Long Span Reinf Steel Area	Thickness			
X x Y	Ashort	Along	BS	Bshort	Blong	W	RWS×RWL or ID	Dshort	Dlong	TS	Ashort	Along	BS	Bshort	Blong	W	RWS×RWL or ID	Dshort	Dlong	TS	BH MIN	HOLE DIA	KO DIA
ft.	in^2/ft	in^2/ft	in.	in^2/ft	in^2/ft	in.	ft. **	in^2/ft	in^2/ft	in.	in^2/ft	in^2/ft	in.	in^2/ft	in^2/ft	in.	ft. **	in^2/ft	in^2/ft	in.	ft.	in.	in.
Precast Junction Box (PJB)																						
3x3	0.23	0.23	6	0.19	0.19	6	N/A	0.37	0.37	9	0.29	0.29	6	0.24	0.24	6	N/A	0.37	0.37	9	3.5	36	36
4x4	0.29	0.29	6	0.24	0.24	6	N/A	0.41	0.41	9	0.47	0.47	6	0.38	0.38	6	N/A	0.41	0.41	9	4.5	48	48
3x5	0.29	0.18	6	0.19	0.35	6	N/A	0.48	0.48	9	0.39	0.18	6	0.23	0.59	6	N/A	0.48	0.48	9	3.5	36/60	36/60
4x5	0.36	0.18	6	0.22	0.34	6	N/A	0.42	0.42	9	0.53	0.26	6	0.39	0.59	6	N/A	0.42	0.42	9	4.5	48/60	48/60
5x5	0.36	0.36	6	0.34	0.34	6	N/A	0.43	0.43	9	0.62	0.62	6	0.59	0.59	6	N/A	0.43	0.43	9	5.5	60	60
5x6	0.27	0.27	9	0.34	0.45	6	N/A	0.48	0.48	9	0.47	0.45	9	0.38	0.54	8	N/A	0.48	0.48	9	5.5	60/72	60/72
6x6	0.27	0.27	9	0.45	0.45	6	N/A	0.56	0.56	9	0.52	0.52	9	0.54	0.54	8	N/A	0.56	0.56	9	6.5	72	72
8x8	0.46	0.46	9	0.51	0.51	8	N/A	0.45	0.45	12	0.87	0.87	9	0.59	0.59	10	N/A	0.45	0.45	12	8.5	96	72
Precast Base (PB)																						
3x3	0.23	0.23	6	0.19	0.19	6	N/A	N/A	N/A	N/A	0.29	0.29	6	0.24	0.24	6	N/A	N/A	N/A	N/A	3.5	36	36
4x4	0.29	0.29	6	0.24	0.24	6	N/A	N/A	N/A	N/A	0.47	0.47	6	0.38	0.38	6	N/A	N/A	N/A	N/A	4.5	48	48
3x5	0.29	0.18	6	0.19	0.35	6	3x3	0.30	0.34	9	0.39	0.18	6	0.23	0.59	6	3x3	0.40	0.40	9	3.5	36/60	36/60
4x5	0.36	0.18	6	0.22	0.34	6	3x3	0.30	0.30	9	0.53	0.26	6	0.39	0.59	6	3x3	0.46	0.37	9	4.5	48/60	48/60
4x5	0.36	0.18	6	0.22	0.34	6	4x4	0.30	0.30	9	0.53	0.26	6	0.39	0.59	6	4x4	0.39	0.39	9	4.5	48/60	48/60
5x5	0.36	0.36	6	0.34	0.34	6	48"	0.39	0.39	9	0.62	0.62	6	0.59	0.59	6	48"	0.47	0.47	9	4.5	48/60	48/60
4x5	0.36	0.18	6	0.22	0.34	6	3x5	0.33	0.40	9	0.53	0.26	6	0.39	0.59	6	3x5	0.48	0.48	9	4.5	48/60	48/60
5x5	0.36	0.36	6	0.34	0.34	6	3x3	0.34	0.34	9	0.62	0.62	6	0.59	0.59	6	3x3	0.53	0.53	9	5.5	60	60
5x5	0.36	0.36	6	0.34	0.34	6	4x4	0.36	0.36	9	0.62	0.62	6	0.59	0.59	6	4x4	0.64	0.64	9	5.5	60	60
5x5	0.38	0.38	6	0.34	0.34	6	48"	0.36	0.36	9	0.62	0.62	6	0.59	0.59	6	48"	0.64	0.64	9	5.5	60	60
5x5	0.36	0.36	6	0.34	0.34	6	3x5	0.34	0.40	9	0.62	0.62	6	0.59	0.59	6	3x5	0.53	0.53	9	5.5	60	60
5x6	0.31	0.31	9	0.34	0.45	6	3x3	0.34	0.34	9	0.47	0.45	9	0.38	0.54	8	3x3	0.61	0.50	9	5.5	60/72	60/72
5x6	0.27	0.27	9	0.34	0.45	6	4x4	0.36	0.45	9	0.47	0.45	9	0.38	0.54	8	4x4	0.74	0.57	9	5.5	60/72	60/72
5x6	0.29	0.29	9	0.34	0.45	6	48"	0.36	0.45	9	0.47	0.45	9	0.38	0.54	8	48"	0.74	0.57	9	5.5	60/72	60/72
5x6	0.29	0.29	9	0.34	0.45	6	3x5	0.45	0.45	9	0.47	0.45	9	0.38	0.54	8	3x5	0.61	0.61	9	5.5	60/72	60/72
6x6	0.29	0.29	9	0.45	0.45	6	3x3	0.41	0.41	9	0.52	0.52	9	0.54	0.54	8	3x3	0.74	0.74	9	6.5	72	72
6x6	0.27	0.27	9	0.45	0.45	6	4x4	0.45	0.45	9	0.52	0.52	9	0.54	0.54	8	4x4	0.87	0.87	9	6.5	72	72
6x6	0.29	0.29	9	0.45	0.45	6	48"	0.45	0.45	9	0.52	0.52	9	0.54	0.54	8	48"	0.87	0.87	9	6.5	72	72
6x6	0.29	0.29	9	0.45	0.45	6	3x5	0.45	0.45	9	0.52	0.52	9	0.54	0.54	8	3x5	0.87	0.87	9	6.5	72	72
8x8	0.52	0.52	9	0.51	0.51	8	3x3	0.61	0.61	12	0.91	0.91	9	0.70	0.70	10	3x3	0.85	0.85	12	8.5	96	72
8x8	0.52	0.52	9	0.51	0.51	8	4x4	0.70	0.70	12	0.87	0.87	9	0.70	0.70	10	4x4	1.01	1.01	12	8.5	96	72
8x8	0.52	0.52	9	0.51	0.51	8	48"	0.70	0.70	12	0.87	0.87	9	0.70	0.70	10	48"	1.01	1.01	12	8.5	96	72
8x8	0.52	0.52	9	0.51	0.51	8	3x5	0.70	0.85	12	0.87	0.87	9	0.70	0.70	10	3x5	1.01	1.01	12	8.5	96	72

** Unless otherwise indicated.

DISCLAIMER:
The use of this standard is governed by the "Texas Engineering Practice Act". No warranty of any kind is made by TxDOT for any purpose whatsoever. TxDOT assumes no responsibility for the completeness of this standard or for errors that may appear in this standard due to subsequent revisions or changes made by TxDOT.

DATE:
FILE:

FABRICATION NOTES:
1. Maximum spacing of reinforcement is 8".
2. At manufacturer's option, provide cast or cored holes or thin wall panels (KO) to the maximum diameter shown for each. When no penetration is required, it is acceptable to provide a wall with no sectional reduction.

GENERAL NOTES:
1. Precast Junction Box consists of base slab, base unit, risers (as required), and below grade slab. See sheet PJB for details.
2. Precast Base consists of base slab, base unit, risers (as required), reducing slab (as required), and reduced risers (as required). See sheet PB for details.
3. Min Height shown is for stock base units. Use stock base units whenever practical. Smaller height base units can be used in special installation circumstances, when noted elsewhere in the plans. Absolute minimum height of base units is 2'-6".

HL93 LOADING

Texas Department of Transportation | Bridge Division Standard

DESIGN DATA FOR PRECAST BASE AND JUNCTION BOX

PDD

FILE: CO-PDD-20.dgn	DN: TxDOT	CK: TxDOT	DW: TxDOT	CK: TxDOT
©TxDOT February 2020	CONT	SECT	JOB	HIGHWAY
REVISIONS	DIST	COUNTY		SHEET NO.

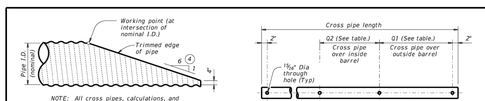

NOTE: All cross pipes, calculations, and dimensions are based on the pipe culverts mitered as shown in this detail. Alternate styles of mitered ends will require that appropriate adjustments be made to the values presented on this standard.

SIDE ELEVATION OF TYPICAL PIPE CULVERT MITER

(Showing corrugated metal pipe (CMP) culvert Details at reinforced concrete pipe (RCP) culvert are similar.)

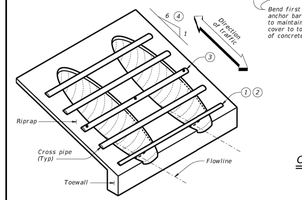

ISOMETRIC VIEW OF TYPICAL INSTALLATION

PIPE WITH BOLTED ANCHOR

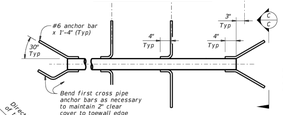

PIPE WITH ANCHOR BARS

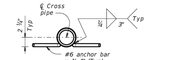

SECTION C-C

CROSS PIPE DETAILS

DETAIL "A"

(Showing invert with concrete metal pipe (CMP) culvert. Reinforced concrete pipe (RCP) culvert details are similar. Cross pipes not shown for clarity.)

SECTION B-B

(Cross pipes not shown for clarity.)

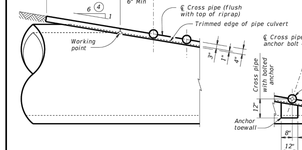

SIDE ELEVATION OF CAST-IN-PLACE CONCRETE

(Showing reinforced concrete pipe (RCP) culvert. Details at corrugated metal pipe (CMP) culvert are similar.)



SHOWING TYPICAL PIPE CULVERT AND RIPRAP

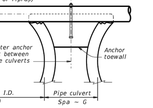

SHOWING CROSS PIPE WITH ANCHOR BAR



SHOWING CROSS PIPE WITH BOLTED ANCHOR

SECTION A-A

CROSS PIPE LENGTHS, REQUIRED PIPE SIZES, AND RIPRAP QUANTITIES 4

Nominal Culvert I.D.	Conc Riprap (CY) 6	Pipe Culvert Spa ~ G	Single Barrel ~ Q1	Multi-Barrel ~ Q1	Q2	Conditions for Use of Cross Pipes	Cross Pipe Sizes
12"	0.6	0' - 9"	N/A	2' - 1"	1' - 9"	3 or more pipe culverts	3" Std (3.500" O.D.)
15"	0.7	0' - 11"	N/A	2' - 5"	2' - 2"		
18"	0.8	1' - 2"	N/A	2' - 10"	2' - 8"		
21"	0.9	1' - 4"	N/A	3' - 2"	3' - 1"		
24"	0.9	1' - 7"	N/A	3' - 6"	3' - 7"		
27"	1.0	1' - 8"	N/A	3' - 10"	3' - 11"	3 or more pipe culverts	3 ½" Std (4.000" O.D.)
30"	1.1	1' - 10"	N/A	4' - 2"	4' - 4"	2 or more pipe culverts	
33"	1.2	1' - 11"	4' - 2"	4' - 5"	4' - 8"	All pipe culverts	
36"	1.3	2' - 1"	4' - 6"	4' - 9"	5' - 1"	All pipe culverts	
42"	1.5	2' - 4"	4' - 11"	5' - 5"	5' - 10"		
48"	1.7	2' - 7"	5' - 5"	6' - 0"	6' - 7"		5" Std (4.500" O.D.)
54"	2.0	3' - 0"	5' - 11"	6' - 9"	7' - 6"		
60"	2.2	3' - 3"	6' - 5"	7' - 4"	8' - 3"	All pipe culverts	
66"	2.4	3' - 3"	6' - 11"	7' - 10"	8' - 9"		
72"	2.7	3' - 4"	7' - 5"	8' - 5"	9' - 4"		

1. The proper installation of the first cross pipe is critical for vehicle safety. Place the top of the first cross pipe no more than 6" above the flow line.
2. Provide cross pipes, except the first bottom pipe, of the size shown in the table. Provide a 3 1/#2" standard pipe (4" O.D.) for the first bottom pipe.
3. Install the third cross pipe from the bottom of the culvert using a bolted connection. Ensure that riprap concrete does not flow into the cross pipe so as to permit disassembly of the bolted connection to allow cleanout access. At the Contractor's option, install all other cross pipes using the bolted connection details.
4. Match cross slope as shown elsewhere in the plans. Cross slope of 6:1 or flatter is required for vehicle safety.
5. Riprap placed beyond the limits shown will be paid for as concrete riprap in accordance with Item 432, "Riprap."
6. Quantities shown are for one end of one reinforced concrete pipe (RCP) culvert. For multiple pipe culverts or for corrugated metal pipe (CMP) culverts, quantities will need to be adjusted. Riprap quantities are for contractor's information only.

MATERIAL NOTES:
- Synthetic fibers listed on the "Fibers for Concrete" Material Producer List (MPL) may be used in lieu of steel reinforcing in riprap concrete unless noted otherwise.
- Provide cross pipes that meet the requirements of ASTM A53 (Type E or S, Gr B), ASTM A500 (Gr B), or API 5L X52.
- Provide ASTM A307 bolts and nuts.
- Galvanize all steel components, except concrete reinforcing, after fabrication. Repair galvanizing damaged during transport or construction in accordance with the specifications.

GENERAL NOTES:
- Cross pipes are designed for a traversing load of 10,000 pounds at yield as recommended by Research Report 280-2F, "Safety Treatment of Roadside Parallel-Drainage Structures", Texas Transportation Institute, March 1981.
- Safety end treatments (SET) shown herein are intended for use in those installations where out of control vehicles are likely to traverse the openings approximately perpendicular to the cross pipes.
- Construct concrete riprap and all necessary inverts in accordance with the requirements of Item 432, "Riprap."
- Payment for riprap and toewall is included in the Price Bid for each Safety End Treatment.

Texas Department of Transportation | Bridge Division Standard

SAFETY END TREATMENT FOR 12" DIA TO 72" DIA PIPE CULVERTS TYPE II ~ PARALLEL DRAINAGE SETP-PD

FILE: CO-SETP-PD-20.dgn	DN: GAF	CK: CAT	DW: JRP	CK: SAF
©TxDOT February 2020	CONT	SECT	JOB	HIGHWAY
REVISIONS	DIST	COUNTY		SHEET NO.

NO.	BY	DATE	REVISION DESCRIPTION
1		07/09/25	DETAIL ADDED

RECORD ONLY

GRAY ENGINEERING
8834 N. Capital of Texas Hwy.
Suite 140
Austin, Texas 78759
(512)452-0371
FAX(512)454-9933
TBPELS FIRM #2946

LIDELL WALKER PHASE 2B

STORM SEWER DETAILS (5 OF 5)

PROJECT NO: 1725-11738
DESIGNED BY: ARS
DRAWN BY: ARS
CHECKED BY: TMH

NOTICE:
ALTERATION OF A SEALED DRAWING WITHOUT PROPER NOTIFICATION TO THE RESPONSIBLE ENGINEER IS A VIOLATION OF THE TEXAS ENGINEERING PRACTICE ACT.

FOR OFFICIAL USE ONLY
Reviewed for Substantial Conformance by City of Hutto
Mark Hahn, P.E.
City Engineer
Engineering - City of Hutto
09/26/2025

STATE OF TEXAS
AUSTIN R. SEIFERT
137175
LICENSED PROFESSIONAL ENGINEER
07/23/2025

SHEET 41 OF 52

PROJECT NO: 2157-ENG
LIDELL WALKER PHASE 2B

H:\PROJECTS\1725 - GRBK EDGEWOOD I,LC\LIDELL WALKER PHASE 2B\CAD\SHEETS\11738-C-DETL.DWG DATE: 7/23/2025 1:22:16 PM BY: ASEIFERT

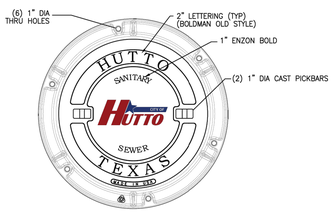

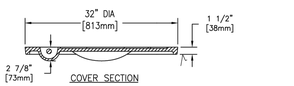

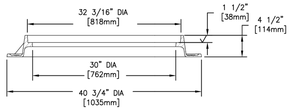

NOTES:
1. STANDARD WASTEWATER MANHOLE SET TO BE EAST JORDAN IRON WORKS, INC. CATALOG NO V1420RG/V1432DI OR CITY ENGINEER APPROVED EQUAL. COVER TO BE STAMPED "SANITARY SEWER."
2. STANDARD WASTEWATER MANHOLE SET TO BE HEAVY DUTY LOAD RATED.
3. FOR MORE DETAILED SPECIFICATIONS, REFER TO EAST JORDAN IRON WORKS, INC. REFERENCE PRODUCT DRAWING NO. 4143210640I.
4. FOR BOLTED WASTEWATER MANHOLE SET REFER TO CITY OF HUTTO DETAIL WW03.
5. MANHOLE COVER TO BE DUCTILE IRON PER ASTM A536 (70-50-05).
6. MANHOLE FRAME TO BE GRAY IRON PER ASTM A48 CL35B.

The City of Hutto Construction Standards and Details	CURRENT AS OF 10/01/2023	STANDARD MANHOLE DETAIL	
		THE ARCHITECT/ENGINEER ASSUMES RESPONSIBILITY FOR APPROPRIATE USE OF THIS STANDARD.	STANDARD NO. CH-WW-02

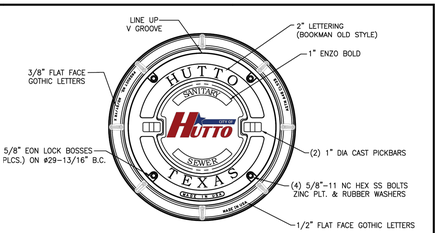

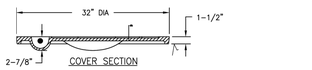

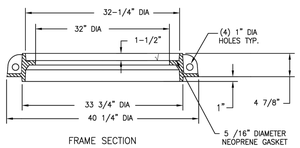

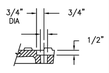

NOTES:
1. BOLTED WASTEWATER MANHOLE SET TO BE EAST JORDAN IRON WORKS, INC. CATALOG NO. B2432, OR CITY ENGINEER APPROVED EQUAL.
2. COVER TO BE STAMPED "SANITARY SEWER".
3. STANDARD WASTEWATER MANHOLE SET TO BE HEAVY DUTY LOAD RATED.
4. FOR MORE DETAILED SPECIFICATIONS, REFER TO EAST JORDAN IRON WORKS, INC. REFERENCE PRODUCT DRAWING 4243211SW01.
5. FOR STANDARD WASTEWATER MANHOLE SET REFER TO COH DETAIL WW02.
6. MANHOLE COVER TO BE DUCTILE IRON PER ASTM A536 (70-50-05).
7. MANHOLE FRAME TO BE GRAY IRON PER ASTM A48 CL35B.

The City of Hutto Construction Standards and Details	CURRENT AS OF 10/01/2023	BOLTED MANHOLE DETAIL	
		THE ARCHITECT/ENGINEER ASSUMES RESPONSIBILITY FOR APPROPRIATE USE OF THIS STANDARD.	STANDARD NO. CH-WW-03

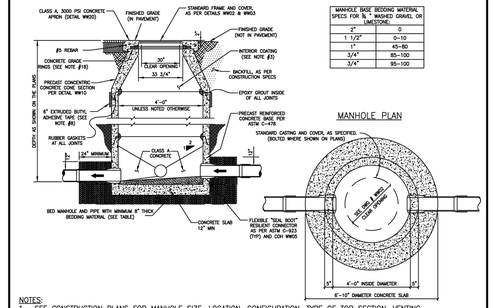

MANHOLE BASE BEDDING MATERIAL SPECS FOR ¾" WASHED GRAVEL OR LIMESTONE

2"	0
1 1/2"	0-10
1"	45-80
3/4"	85-100
3/4"	95-100

MANHOLE PLAN

NOTES:
1. SEE CONSTRUCTION PLANS FOR MANHOLE SIZE, LOCATION, CONFIGURATION, TYPE OF TOP SECTION, VENTING REQUIREMENTS, PIPE SIZES AND TYPES.
2. SEE SPECIFICATIONS ON MATERIALS AND CONSTRUCTION.
3. ENTIRE INTERIOR OF WASTEWATER MANHOLES TO BE COATED WITH RAVEN 405, OR APPROVED EQUAL, WITH A UNIFORM THICKNESS OF 124 MILS AND A MINIMUM THICKNESS OF 100 MILS, APPLIED AFTER MANHOLE HAS PASSED THE VACUUM TEST.
4. ALL MANHOLE COVERS SHALL BE BOLTED AND GASKETED, WHEN MANHOLES ARE LOCATED OUTSIDE OF PAVEMENT.
5. MANHOLES TO BE VENTED ARE IDENTIFIED ON MANHOLE SCHEDULE, REFERENCE MANHOLE VENT DETAIL.
6. A FLOW CHANNEL SHALL BE CONSTRUCTED INSIDE MANHOLE TO DIRECT INFLUENT INTO THE FLOW STREAM. ALL P.V.C. PIPE SHALL BE REMOVED FROM INVERT.
7. FRAME ADJUSTMENT HEIGHT SHALL BE FIVE INCHES (5") MINIMUM AND EIGHTEEN INCHES (18") MAXIMUM.
8. EXTERIOR OF EACH JOINT TO BE WRAPPED IN 6" EXTRUDED BUTYL ADHESIVE TAPE WHEN MANHOLE IS LOCATED INT EH 100-YR FLOODPLAIN.
9. MANHOLES TO BE DESIGNED TO RESIST LATERAL AND VERTICAL SOIL FORCES RESULTING FROM MANHOLE DEPTH. ADDITIONALLY, MANHOLES LOCATED IN PAVEMENT TO BE DESIGNED FOR H20 TRAFFIC LOADING.
10. BASE SECTION SHALL BE DESIGNED FOR H20 LOADING, PLUS EARTH LOAD AT 130 PCF.
11. ALL MANHOLES SHALL BE 48" I.D. PRECAST R.C.P., CLASS III, ASTM C578 BELL AND SPIGOT WITH RUBBER O-RING GASKET JOINTS CONFORMING TO ASTM C478, C433 AND C76.
12. ALL MANHOLES SHALL HAVE WATER-TIGHT FRAME AND COVER, WITH A MINIMUM OF 30" CLEAR OPENING, AS MANUFACTURED BY EAST JORDAN IRON WORKS (AS PER DETAIL WW02 AND WW03) OR CITY ENGINEER APPROVED EQUAL.
13. ALL MANHOLES SHALL BE CONCRETE WITH CAST IRON FRAME AND COVER.
14. ALL MANHOLES SHALL HAVE A CONCENTRIC CONE.
15. MANHOLES MAY HAVE A FLAT LID, IF APPROVED BY CITY OF HUTTO, BEING 12" THICK WITH A MINIMUM 30" OPENING, AS MANUFACTURE BY CALVERT CONCRETE OR CITY ENGINEER APPROVED EQUAL M.F.G. CONFORMING TO ASTM C478, 5000 P.S.I. CONCRETE, TRAFFIC BEARING, AND O-RING JOINT CONFORMING TO ASTM C443.
16. INVERTS AND FLEXIBLE SEAL BOOTS, PER ASTM C-923, SHALL BE CAST INTO BASE SECTION.
17. MINIMUM DROP BETWEEN INVERTS SHALL BE ONE-TENTH OF A FOOT (0.1').
18. TWO INCH (2") GRADE RINGS WITH AN I.D. TO MATCH FRAMES CLEAR OPENING, MINIMUM OF TWO (2), MAXIMUM OF FIVE (5) GRADE RINGS REQUIRED.

The City of Hutto Construction Standards and Details	CURRENT AS OF 10/01/2023	STANDARD MANHOLE DETAIL	
		THE ARCHITECT/ENGINEER ASSUMES RESPONSIBILITY FOR APPROPRIATE USE OF THIS STANDARD.	STANDARD NO. CH-WW-04

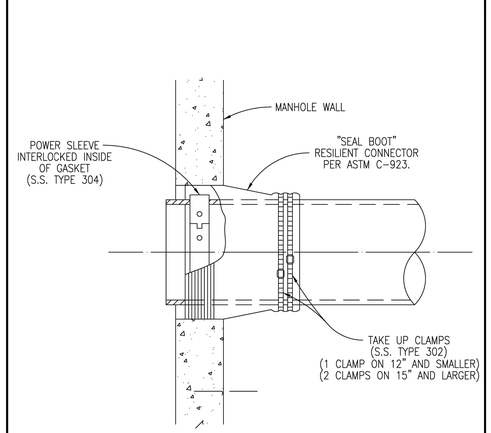

The City of Hutto Construction Standards and Details	CURRENT AS OF 10/01/2023	FLEXIBLE SEAL BOOT DETAIL	
		THE ARCHITECT/ENGINEER ASSUMES RESPONSIBILITY FOR APPROPRIATE USE OF THIS STANDARD.	STANDARD NO. CH-WW-05

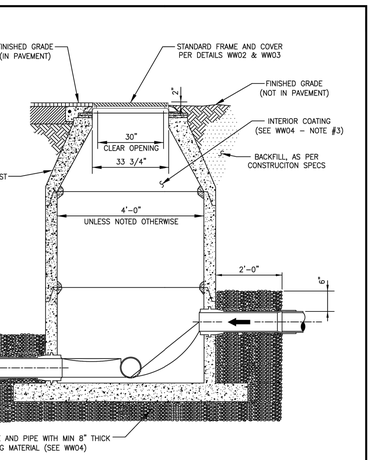

NOTES:
1. TO BE USED WHERE DROP IS SIX INCHES (6") TO TWO FEET (2'). DROPS GREATER THAN 2' USE TYPE "A".
2. A FLOW CHANNEL SHALL BE CONSTRUCTED INSIDE MANHOLE TO DIRECT INFLUENT INTO FLOW STREAM.
3. CONSTRUCTION OF DROP SHALL PROVIDE AN OVERSIZED SLAB TO EXTEND UNDER THE DROP CONNECTION.
4. MINIMUM PIPE SIZE FOR DROP IS EIGHT INCHES (8").
5. SEE STANDARD MANHOLE DETAIL (WW04) FOR ADDITIONAL REQUIREMENTS.

The City of Hutto Construction Standards and Details	CURRENT AS OF 10/01/2023	DROP MANHOLE TYPE "B" DETAIL	
		THE ARCHITECT/ENGINEER ASSUMES RESPONSIBILITY FOR APPROPRIATE USE OF THIS STANDARD.	STANDARD NO. CH-WW-06

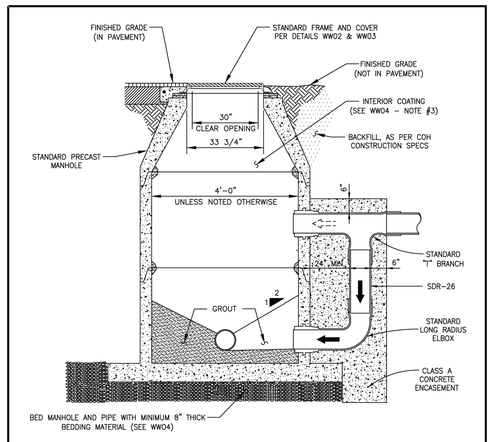

NOTES:
1. CONCRETE ENCASEMENT FOR DROP CONNECTION TO BE POURED INTEGRALLY WITH BOTH MANHOLE SLAB AND WALL.
2. DROP CONNECTIONS SHALL BE REQUIRED WHENEVER AN INFLUENT SEWER IS LOCATED TWO FEET (2') OR MORE ABOVE THE MAIN INVERT CHANNEL. DROPS SHALL NOT EXCEED EIGHT FEET (8').
3. A FLOW CHANNEL SHALL BE CONSTRUCTED INSIDE MANHOLE TO DIRECT INFLUENT INTO FLOW STREAM.
4. MINIMUM PIPE SIZE FOR DROP IS EIGHT INCHES (8").
5. SEE STANDARD MANHOLE DETAIL (WW04) FOR ADDITIONAL REQUIREMENTS.

The City of Hutto Construction Standards and Details	CURRENT AS OF 10/01/2023	DROP MANHOLE TYPE "A" DETAIL	
		THE ARCHITECT/ENGINEER ASSUMES RESPONSIBILITY FOR APPROPRIATE USE OF THIS STANDARD.	STANDARD NO. CH-WW-07

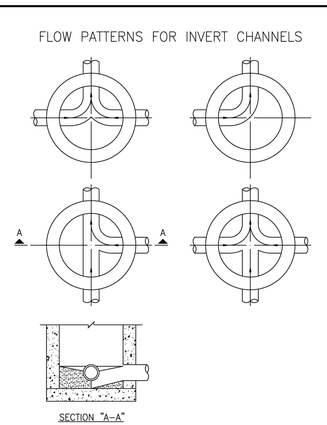

NOTES:
1. INVERT CHANNELS TO BE CONSTRUCTED FOR SMOOTH FLOW WITH NO OBSTRUCTIONS.
2. SPILLWAYS SHALL BE CONSTRUCTED BETWEEN PIPES WITH DIFFERENT INVERT ELEVATIONS PROVIDING FOR SMOOTH FLOW.
3. CHANNELS FOR FUTURE CONSTRUCTIONS (STUBS) SHALL BE CONSTRUCTED, FILLED WITH SAND, AND COVERED WITH 1" OF MORTAR.
4. SLOPE MANHOLE ITSELF WITH A 1:2 SLOPE FROM MANHOLE WALL TO CHANNEL.
5. INVERT SHALL BE A MINIMUM OF 1/2 THE DIAMETER OF THE LARGEST PIPE OR 4" DEEP.
6. MANHOLE BASE SHALL BE 12" THICK MINIMUM.

The City of Hutto Construction Standards and Details	CURRENT AS OF 10/01/2023	FLOW PATTERNS FOR INVERTS DETAIL	
		THE ARCHITECT/ENGINEER ASSUMES RESPONSIBILITY FOR APPROPRIATE USE OF THIS STANDARD.	STANDARD NO. CH-WW-08

8834 N. Capital of Texas Hwy.
Suite 140
Austin, Texas 78759
(512)452-0371
FAX(512)454-9933
TBPELS FIRM #2946
GRAY ENGINEERING

NO.	BY	DATE	REVISION DESCRIPTION
			RECORD ONLY

LIDELL WALKER PHASE 2B

WASTEWATER DETAILS (1 OF 4)

PROJECT NO: 1725-11738

DESIGNED BY: ARS

DRAWN BY: ARS

CHECKED BY: TMH

NOTICE:
ALTERATION OF A SEALED DRAWING WITHOUT PROPER NOTIFICATION TO THE RESPONSIBLE ENGINEER IS A VIOLATION OF THE TEXAS ENGINEERING PRACTICE ACT.

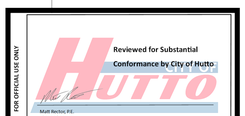

SHEET 42 OF 52

LIDELL WALKER PHASE 2B

PROJECT NO: 2157-ENG

H:\PROJECTS\1725 - GRBK EDGEWOOD LLC\LIDELL WALKER PHASE 2B\CAD\SHEETS\11738-C-DET1.DWG DATE: 7/29/2024 9:40:11 AM BY: ASEIFERT

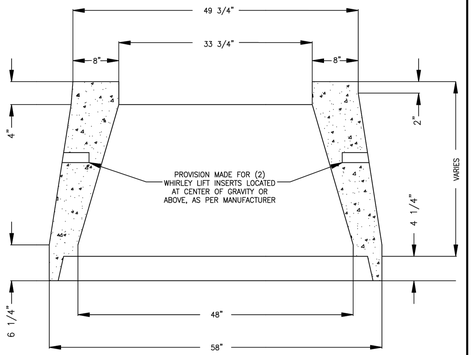

The City of Hutto Construction Standards and Details	CURRENT AS OF 10/01/2023	48" PRECAST CONCRETE CONCENTRIC CONE DETAIL
	THE ARCHITECT/ENGINEER ASSUMES RESPONSIBILITY FOR APPROPRIATE USE OF THIS STANDARD.	STANDARD NO. CH-WW-09

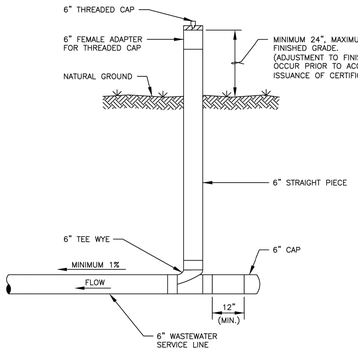

NOTES:

1. ALL PIPE TO BE SDR 26.
2. ALL FITTINGS TO BE SDR 26 GASKET FITTINGS.

The City of Hutto Construction Standards and Details	CURRENT AS OF 10/01/2023	WW CLEANOUT NON-PAVED AREA DETAIL
	THE ARCHITECT/ENGINEER ASSUMES RESPONSIBILITY FOR APPROPRIATE USE OF THIS STANDARD.	STANDARD NO. CH-WW-10

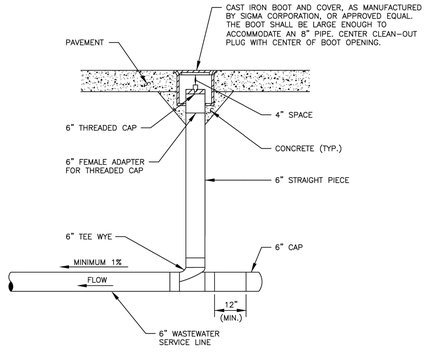

NOTES:

1. ALL PIPE TO BE SDR 26.
2. ALL FITTINGS TO BE SDR 26 GASKET FITTINGS.
3. ALL CLEANOUTS IN PAVED AREAS REQUIRE SPECIFIC ENGINEER APPROVAL.

The City of Hutto Construction Standards and Details	CURRENT AS OF 10/01/2023	WW CLEANOUT PAVED AREA DETAIL
	THE ARCHITECT/ENGINEER ASSUMES RESPONSIBILITY FOR APPROPRIATE USE OF THIS STANDARD.	STANDARD NO. CH-WW-11

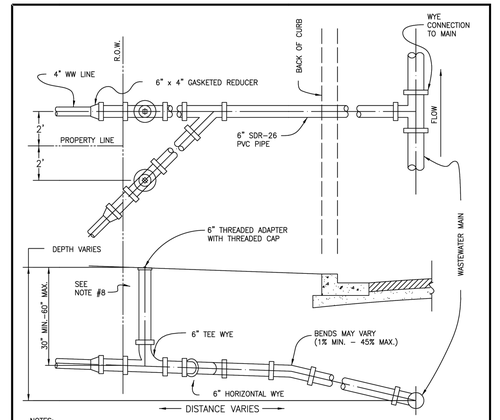

NOTES:

1. SUBDIVISION IMPROVEMENTS WILL END AT R.O.W. WITH PLUGGED WATER-TIGHT CLEAN-OUT.
2. DURING LOT CONSTRUCTION, PLUG WILL BE REMOVED AND 6"X4" ELASTOMERIC GASKETED BELL REDUCER INSTALLED. BUSHINGS ARE NOT ALLOWED.
3. SOLIDLY TAMP BACKFILL AT LEAST ONE FOOT (1') ABOVE TOP OF PIPE. SERVICES UNDER PAVED AREAS SHALL BE BACKFILLED TO THE SAME SPECIFICATIONS AS SHOWN ON PAVEMENT REPLACEMENT DETAIL.
4. CONTRACTOR SHALL MARK ON A CLEAN SET OF PLANS THE FINAL STATIONING OR DISTANCE AND DIRECTION FROM MANHOLE TO EACH SERVICE LATERAL AND GIVE TO ENGINEER FOR RECORD DRAWING PURPOSES.
5. SERVICE LINE MATERIAL SHALL BE P.V.C., SDR-26.
6. CITY OF HUTTO RESPONSIBILITY ENDS AT CLEAN OUT.
7. NO CLEAN-OUT SHALL BE SET IN SIDEWALK OR DRIVEWAY WITHOUT PRIOR WRITTEN APPROVAL FROM CITY ENGINEER.
8. SEE CITY OF HUTTO DETAIL WW11 FOR INSTALLATIONS IN CONCRETE SURFACES, CITY OF HUTTO DETAIL WW10 FOR ALL OTHERS.
9. CLEAN OUTS MUST BE 9' FROM WATERLINES.

The City of Hutto Construction Standards and Details	CURRENT AS OF 10/01/2023	SEWER SERVICE CONNECTION DETAIL
	THE ARCHITECT/ENGINEER ASSUMES RESPONSIBILITY FOR APPROPRIATE USE OF THIS STANDARD.	STANDARD NO. CH-WW-12

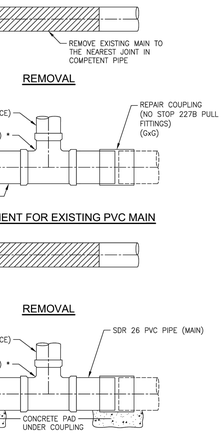

NOTES

1. ALL WASTEWATER PIPING SHALL HAVE ELASTOMERIC GASKET TYPE JOINTS AND SLOPE DOWNWARD TO MAIN ONE PERCENT (1%) MINIMUM TO FORTY-FIVE PERCENT (45%) MAXIMUM.
2. DEPTH OF SERVICE AT PROPERTY LINE WILL BE SHOWN ON PLANS BY ENGINEER IF GREATER THAN FOUR FEET (4'), OTHERWISE THE INSTALLED DEPTH WILL BE FOUR FOOT (4') MINIMUM AND SIX FEET (6') MAXIMUM AT PROPERTY LINE.
3. REPLACE THE BEDDING AND BACKFILL IN ACCORDANCE WITH THE TRENCH EMBEDMENT DETAIL.

The City of Hutto Construction Standards and Details	CURRENT AS OF 10/01/2023	GASKETED FITTING FOR SEWER SERVICE DETAIL
	THE ARCHITECT/ENGINEER ASSUMES RESPONSIBILITY FOR APPROPRIATE USE OF THIS STANDARD.	STANDARD NO. CH-WW-13

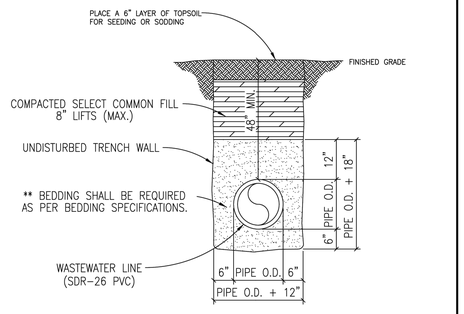

** TYPICAL BEDDING SPECIFICATIONS:

SIEVE SIZE	3/8" F % RETAINED	1/2" D % RETAINED
1/2"	0	0
3/8"	0-2	5-25
#4	40-85	80-100
#10	95-100	96-100

NOTES:

1. IF GROUND WATER IS PRESENT IN THE TRENCH, THE BEDDING MATERIAL SHALL BE SURROUNDED BY FILTER FABRIC (MIRAFI 140N OR EQUIVALENT) ON ALL SIDES TO PREVENT SOIL INFILTRATION INTO THE BEDDING MATERIAL.

The City of Hutto Construction Standards and Details	CURRENT AS OF 10/01/2023	TRENCH AND EMBEDMENT NON-PAVED DETAIL
	THE ARCHITECT/ENGINEER ASSUMES RESPONSIBILITY FOR APPROPRIATE USE OF THIS STANDARD.	STANDARD NO. CH-WW-15

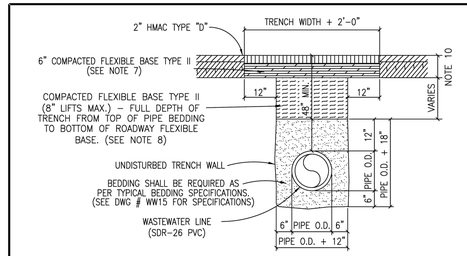

NOTES:

1. REPLACED BASE MATERIAL OVER DITCH SHALL BE TWICE THE THICKNESS OF THE ORIGINAL BASE.
2. BASE MATERIAL SHALL BE PLACED IN TWO OR THREE LAYERS AND EACH LAYER THOROUGHLY ROLLED OR TAMPED TO SPECIFIED MAXIMUM DENSITY.
3. ASPHALT CONCRETE PAVEMENT JOINTS SHALL BE MECHANICALLY SAWED.
4. SURFACE MATERIAL WILL BE CONSISTENT WITH THE EXISTING SURFACE.
5. A MINIMUM OF ONE DENSITY TEST SHALL BE TAKEN EVERY TWO HUNDRED (200) FEET FOR EACH SIX (6) INCH LIFT OF SUBGRADE AND EACH OPEN CUT CROSSING. PROCTORS FOR MATERIALS USED IN BACKFILLING SHALL BE OBTAINED BY A CERTIFIED LABORATORY. DENSITY TESTS SHALL BE CONDUCTED BY A CERTIFIED LABORATORY OR THE PERMITTEE'S CONSULTANTS. THE PERCENTAGE OF MAXIMUM DENSITY REQUIRED SHALL BE IN ACCORDANCE WITH THE LATEST EDITION OF "THE DEPARTMENT OF TRANSPORTATION STANDARD SPECIFICATIONS FOR ROAD AND BRIDGE CONSTRUCTION" AT THE TIME THE PERMIT WAS ISSUED. ALL DENSITY TESTS SHALL BE COMPLETED AND ACCEPTED ON EACH LAYER PRIOR TO ADDITIONAL BACKFILLING. A COPY OF ALL COMPLETED AND ACCEPTED DENSITY TESTS SHALL BE FURNISHED TO CITY OF HUTTO.
6. THESE SPECIFICATIONS MAY BE SUPERSEDED BY THE GOVERNING AGENCY. FLEXIBLE BASE TYPE II: (ROADWAY BASE)
7. TxDOT TYPE A - GRADE 2 OR BETTER CRUSHED LIMESTONE BASE COMPACTED TO 100% OF TxDOT 113E AT OPTIMUM MOISTURE. PROCTOR TO BE PROVIDED BY THE CONTRACTOR TO THE CITY INSPECTOR. FLEXIBLE BASE TYPE II: (TRENCH BACKFILL)
8. TxDOT TYPE A - GRADE 2 OR BETTER CRUSHED LIMESTONE BASE COMPACTED TO 95% OF TxDOT 113E AT OPTIMUM MOISTURE. PROCTOR TO BE PROVIDED BY THE CONTRACTOR TO THE CITY INSPECTOR.
9. IF GROUND WATER IS PRESENT IN THE TRENCH, THE BEDDING MATERIAL SHALL BE SURROUNDED BY FILTER FABRIC (MIRAFI 140N OR EQUIVALENT) ON ALL SIDES TO PREVENT SOIL INFILTRATION INTO THE BEDDING MATERIAL.
10. CROSS SECTION SHALL MATCH EXISTING ROAD OR 8" WHICHEVER IS GREATER.

The City of Hutto Construction Standards and Details	CURRENT AS OF 10/01/2023	TRENCH AND EMBEDMENT UNDER EXISTING ROAD DETAIL
	THE ARCHITECT/ENGINEER ASSUMES RESPONSIBILITY FOR APPROPRIATE USE OF THIS STANDARD.	STANDARD NO. CH-WW-16

8834 N. Capital of Texas Hwy.
Suite 140
Austin, Texas 78759
(512)452-0371
FAX(512)454-9933
TBPELS FIRM #2946
GRAY ENGINEERING

NO.	BY	DATE	REVISION DESCRIPTION

RECORD ONLY

LIDELL WALKER PHASE 2B

WASTEWATER DETAILS (2 OF 4)

PROJECT NO: 1725-11738

DESIGNED BY: ARS

DRAWN BY: ARS

CHECKED BY: TMH

NOTICE:
ALTERATION OF A SEALED DRAWING WITHOUT PROPER NOTIFICATION TO THE RESPONSIBLE ENGINEER IS A VIOLATION OF THE TEXAS ENGINEERING PRACTICE ACT.

FOR OFFICIAL USE ONLY
Reviewed for Substantial Conformance by City of Hutto
Matt Reckac, P.E.
City Engineer
Engineering - City of Hutto
10/01/2024

STATE OF TEXAS
AUSTIN R. SEIFERT
137175
LICENSED
PROFESSIONAL ENGINEER
07/29/2024

PROJECT NO: 2157-ENG

LIDELL WALKER PHASE 2B

SHEET 43 OF 52

H:\PROJECTS\1725 - GRBK EDGEWOOD LLC\LIDELL WALKER PHASE 2B\CAD\SHEETS\11738-C-DETL.DWG DATE: 7/29/2024 9:40:18 AM BY: ASEIFERT

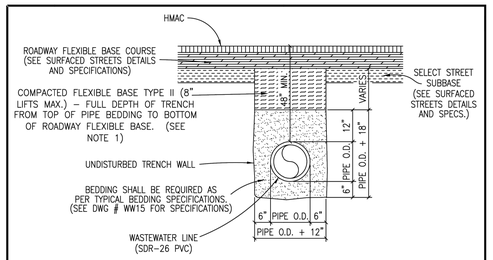

NOTES:

1. TXDOT TYPE A–GRADE 2 OR BETTER CRUSHED LIMESTONE BASE COMPACTED TO 95% OF THE TXDOT 113E AT OPTIMUM MOISTURE. PROCTOR TO BE PROVIDED BY THE CONTRACTOR TO THE CITY INSPECTOR.
2. A MINIMUM OF ONE DENSITY TEST SHALL BE TAKEN EVERY TWO HUNDRED (200) FEET FOR EACH EIGHT (8) INCH LIFT OF BASE. PROCTORS FOR MATERIALS USED IN BACKFILLING SHALL BE OBTAINED BY A CERTIFIED LABORATORY. DENSITY TESTS SHALL BE CONDUCTED BY A CERTIFIED LABORATORY OR THE PERMITTEE'S CONSULTANTS. THE PERCENTAGE OF MAXIMUM DENSITY REQUIRED SHALL BE IN ACCORDANCE WITH THE LATEST EDITION OF "THE DEPARTMENT OF TRANSPORTATION STANDARD SPECIFICATIONS FOR ROAD AND BRIDGE CONSTRUCTION" AT THE TIME THE PERMIT WAS ISSUED. ALL DENSITY TESTS SHALL BE COMPLETED AND ACCEPTED ON EACH LAYER PRIOR TO ADDITIONAL BACKFILLING. A COPY OF ALL COMPLETED AND ACCEPTED DENSITY TESTS SHALL BE FURNISHED TO CITY OF HUTTO.
3. THESE SPECIFICATIONS MAY BE SUPERSEDED BY THE GOVERNING AGENCY.
4. IF GROUND WATER IS PRESENT IN THE TRENCH, THE BEDDING MATERIAL SHALL BE SURROUNDED BY FILTER FABRIC (MIRAFI 140N OR EQUIVALENT) ON ALL SIDES TO PREVENT SOIL INFILTRATION INTO THE BEDDING MATERIAL.

The City of Hutto Construction Standards and Details	CURRENT AS OF 10/01/2023	TRENCH AND EMBEDMENT UNDER PROPOSED PAVEMENT DETAIL
	THE ARCHITECT/ENGINEER ASSUMES RESPONSIBILITY FOR APPROPRIATE USE OF THIS STANDARD.	STANDARD NO. CH-WW-17

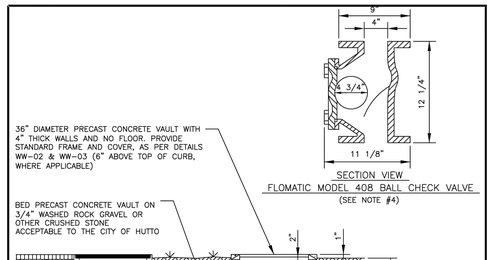

NOTES:

1. AIR VENT PIPE TO BE 4" D.I.P., CLASS 53 WITH FLANGED CONNECTIONS.
2. ALL FITTINGS TO BE 150 PSIG RATED & ANSI/AWWA C110/A21.10.
3. AIR VENT PIPE RISER SHALL BE INSTALLED TO A MINIMUM DEPTH FROM GROUND SURFACE AS POSSIBLE, PREFERABLY LOCATED IN THE CONCENTRIC CONCRETE CONE.
4. MINIMUM ELEVATION AT THE VENT OPENING SHALL BE 1 FOOT (1'–0") ABOVE THE ULTIMATE 100 YEAR FLOOD PLAIN ELEVATION. IF ELEVATION OF VENT OPENING IS LESS THAN 1 FOOT (1'–0") ABOVE THE ULTIMATE 100 YEAR FLOOD PLAIN ELEVATION, A FLOMATIC MODEL 408, PART #2145 BALL CHECK VALVE, OR APPROVED EQUAL, WITH FLOATING TYPE BALL, SHALL BE INSTALLED AT DOWN TURNED OPENING OF VENT. A 16 MESH 304 STAINLESS STEEL INSECT SCREEN SHALL BE PLACED IN THE OPENING.

The City of Hutto Construction Standards and Details	CURRENT AS OF 10/01/2023	MANHOLE VENT BELOW GROUND DETAIL
	THE ARCHITECT/ENGINEER ASSUMES RESPONSIBILITY FOR APPROPRIATE USE OF THIS STANDARD.	STANDARD NO. CH-WW-18

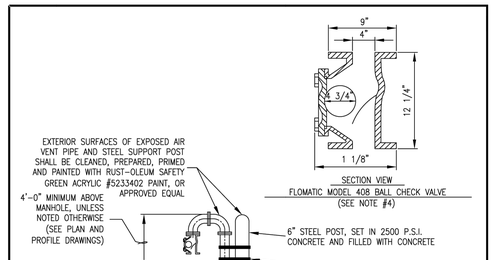

NOTES:

1. AIR VENT PIPE TO BE 4" D.I.P., CLASS 53 WITH FLANGED CONNECTIONS.
2. ALL FITTINGS TO BE 150 PSIG RATED & ANSI/AWWA C110/A21.10.
3. AIR VENT PIPE RISER SHALL BE INSTALLED TO A MINIMUM DEPTH FROM GROUND SURFACE AS POSSIBLE, PREFERABLY LOCATED IN THE CONCENTRIC CONCRETE CONE.
4. MINIMUM ELEVATION AT THE VENT OPENING SHALL BE 1 FOOT (1'–0") ABOVE THE ULTIMATE 100 YEAR FLOOD PLAIN ELEVATION. IF ELEVATION OF VENT OPENING IS LESS THAN 1 FOOT (1'–0") ABOVE THE ULTIMATE 100 YEAR FLOOD PLAIN ELEVATION, A FLOMATIC MODEL 408, PART #2145 BALL CHECK VALVE, OR APPROVED EQUAL, WITH FLOATING TYPE BALL, SHALL BE INSTALLED AT DOWN TURNED OPENING OF VENT. A 16 MESH 304 STAINLESS STEEL INSECT SCREEN SHALL BE PLACED IN THE OPENING.

The City of Hutto Construction Standards and Details	CURRENT AS OF 10/01/2023	MANHOLE VENT ABOVE GROUND DETAIL
	THE ARCHITECT/ENGINEER ASSUMES RESPONSIBILITY FOR APPROPRIATE USE OF THIS STANDARD.	STANDARD NO. CH-WW-19

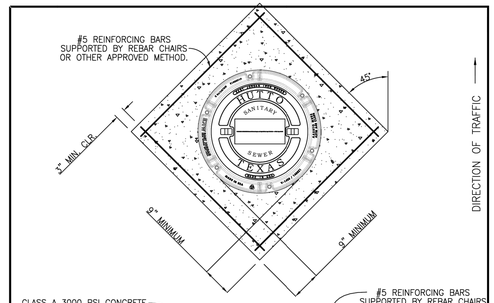

The City of Hutto Construction Standards and Details	CURRENT AS OF 10/01/2023	MANHOLE COVER CONCRETE APRON DETAIL
	THE ARCHITECT/ENGINEER ASSUMES RESPONSIBILITY FOR APPROPRIATE USE OF THIS STANDARD.	STANDARD NO. CH-WW-20

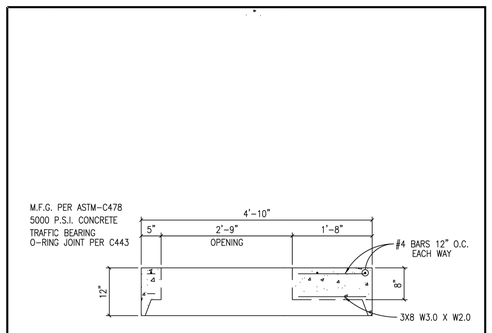

NOTES:

1. AVAILABLE WITH CAST IRON RING AND COVER CAST IN PLACE.
2. PERMITTED ONLY WITH WRITTEN APPROVAL.

The City of Hutto Construction Standards and Details	CURRENT AS OF 10/01/2023	48" FLAT MANHOLE LID DETAIL
	THE ARCHITECT/ENGINEER ASSUMES RESPONSIBILITY FOR APPROPRIATE USE OF THIS STANDARD.	STANDARD NO. CH-WW-21

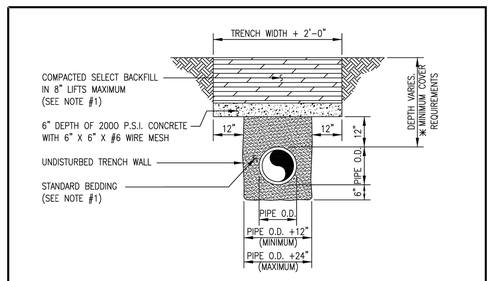

NOTE:

1. WASTEWATER LINE AND SURFACE REPAIR DETAIL WW15 FOR PIPE BEDDING/BACKFILL REQUIREMENTS AND MINIMUM COVER REQUIREMENTS.
2. REQUIREMENTS FOR CONCRETE TRENCH CAPS IN WATERWAYS AND DRAINAGE AREAS NEED TO BE REVIEWED ON A CASE BY CASE BASIS AND APPROVED BY THE CITY ENGINEER AND INSPECTOR.

The City of Hutto Construction Standards and Details	CURRENT AS OF 10/01/2023	WASTEWATER CONCRETE TRENCH CAP DETAIL
	THE ARCHITECT/ENGINEER ASSUMES RESPONSIBILITY FOR APPROPRIATE USE OF THIS STANDARD.	STANDARD NO. CH-WW-24

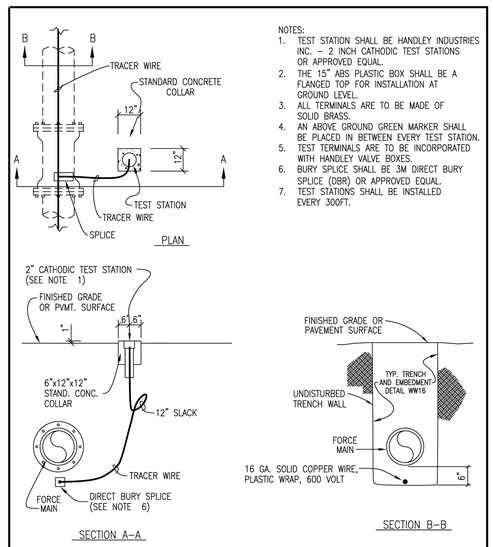

NOTES:

1. TEST STATION SHALL BE HANDLEY INDUSTRIES INC. – 2 INCH CATHODIC TEST STATIONS OR APPROVED EQUAL.
2. THE 15" ABS PLASTIC BOX SHALL BE A FLANGED TOP FOR INSTALLATION AT GROUND LEVEL.
3. ALL TERMINALS ARE TO BE MADE OF SOLID BRASS.
4. AN ABOVE GROUND GREEN MARKER SHALL BE PLACED IN BETWEEN EVERY TEST STATION.
5. TEST TERMINALS ARE TO BE INCORPORATED WITH HANDLEY VALVE BOXES.
6. BURY SPLICE SHALL BE 3M DIRECT BURY SPLICE (DBR) OR APPROVED EQUAL.
7. TEST STATIONS SHALL BE INSTALLED EVERY 300FT.

The City of Hutto Construction Standards and Details	CURRENT AS OF 10/01/2023	TRACER WIRE INSTALLATION DETAIL
	THE ARCHITECT/ENGINEER ASSUMES RESPONSIBILITY FOR APPROPRIATE USE OF THIS STANDARD.	STANDARD NO. CH-WW-25

8834 N. Capital of Texas Hwy.
Suite 140
Austin, Texas 78759
(512)452-0371
FAX(512)454-9933
TBPELS FIRM #2946
GRAY ENGINEERING

NO.	BY	DATE	REVISION DESCRIPTION
			RECORD ONLY

LIDELL WALKER PHASE 2B

WASTEWATER DETAILS (3 OF 4)

PROJECT NO: 1725-11738

DESIGNED BY: ARS

DRAWN BY: ARS

CHECKED BY: TMH

NOTICE:
ALTERATION OF A SEALED DRAWING WITHOUT PROPER NOTIFICATION TO THE RESPONSIBLE ENGINEER IS A VIOLATION OF THE TEXAS ENGINEERING PRACTICE ACT.

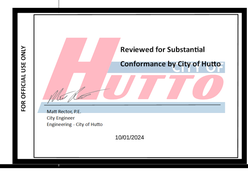

SHEET 44 OF 52

PROJECT NO: 2157-ENG LIDELL WALKER PHASE 2B

H:\PROJECTS\1725 - GRBK EDGEWOOD I LC\LIDELL WALKER PHASE 2B\CAD\SHEETS\11738-C-DETL.DWG DATE: 7/29/2024 9:40:27 AM BY: ASEIFERT

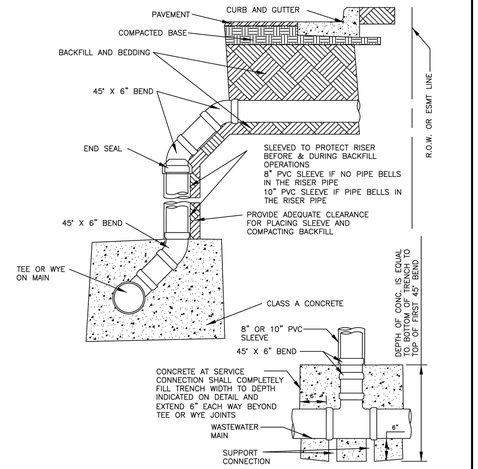

The City of Hutto Construction Standards and Details	CURRENT AS OF 10/01/2023	DEEP SERVICE CONNECTION DETAIL
CITY OF HUTTO	THE ARCHITECT/ENGINEER ASSUMES RESPONSIBILITY FOR APPROPRIATE USE OF THIS STANDARD.	STANDARD NO. CH-WW-26

FOR OFFICIAL USE ONLY

Reviewed for Substantial Conformance by City of Hutto

CITY OF HUTTO

Matt Reiter, P.E.
City Engineer
Engineering - City of Hutto

10/01/2024

8834 N. Capital of Texas Hwy.
Suite 140
Austin, Texas 78759
(512)452-0371
FAX(512)454-9933
TBPELS FIRM #2946

GRAY ENGINEERING

NO.	BY	DATE	REVISION DESCRIPTION

RECORD ONLY

LIDELL WALKER PHASE 2B

WASTEWATER DETAILS (4 OF 4)

PROJECT NO: 1725-11738

DESIGNED BY: ARS

DRAWN BY: ARS

CHECKED BY: TMH

NOTICE:
ALTERATION OF A SEALED DRAWING WITHOUT PROPER NOTIFICATION TO THE RESPONSIBLE ENGINEER IS A VIOLATION OF THE TEXAS ENGINEERING PRACTICE ACT.

STATE OF TEXAS
AUSTIN R. SEIFERT
137175
LICENSED PROFESSIONAL ENGINEER
07/29/2024

SHEET 45 OF 52

PROJECT NO: 2157-ENG LIDELL WALKER PHASE 2B

H:\PROJECTS\1725 - GRBK EDGEWOOD LLC\LIDELL WALKER PHASE 2B\CAD\SHEETS\11738-C-DETL.DWG DATE: 7/29/2024 9:40:29 AM BY: ASEIFERT

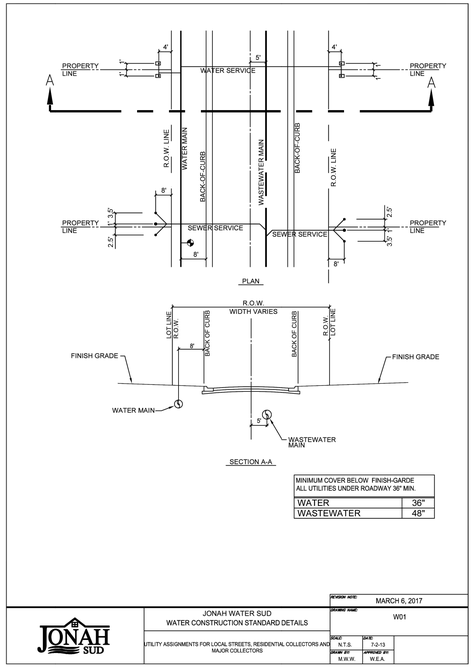

MINIMUM COVER BELOW FINISH-GARDE ALL UTILITIES UNDER ROADWAY 36" MIN.	
WATER	36"
WASTEWATER	48"

REVISION NOTE:	MARCH 6, 2017
DRAWING NAME:	W01

JONAH WATER SUD
WATER CONSTRUCTION STANDARD DETAILS

UTILITY ASSIGNMENTS FOR LOCAL STREETS, RESIDENTIAL COLLECTORS AND MAJOR COLLECTORS

SCALE:	DATE:
N.T.S.	7-2-13
DRAWN BY:	APPROVED BY:
M.W.W.	W.E.A.

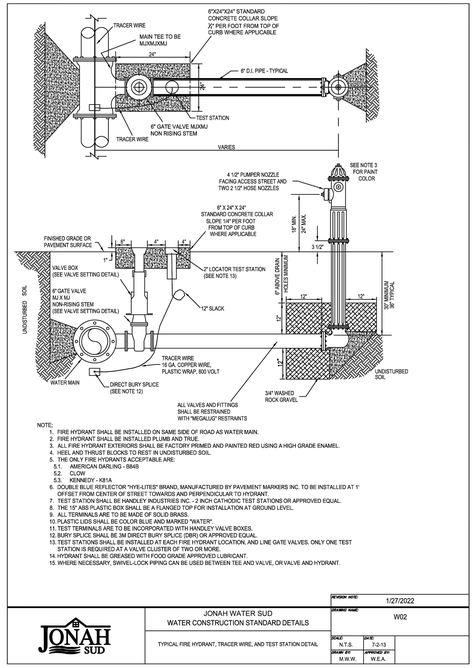

NOTE:
1. FIRE HYDRANT SHALL BE INSTALLED ON SAME SIDE OF ROAD AS WATER MAIN.
2. FIRE HYDRANT SHALL BE INSTALLED PLUMB AND TRUE.
3. ALL FIRE HYDRANT EXTERIORS SHALL BE FACTORY PRIMED AND PAINTED RED USING A HIGH GRADE ENAMEL.
4. HEEL AND THRUST BLOCKS TO REST IN UNDISTURBED SOIL.
5. THE ONLY FIRE HYDRANTS ACCEPTABLE ARE:
   5.1. AMERICAN DARLING - B84B
   5.2. CLOW
   5.3. KENNEDY – K81A
6. DOUBLE BLUE REFLECTOR "HYE-LITES" BRAND, MANUFACTURED BY PAVEMENT MARKERS INC. TO BE INSTALLED AT 1' OFFSET FROM CENTER OF STREET TOWARDS AND PERPENDICULAR TO HYDRANT.
7. TEST STATION SHALL BE HANDLEY INDUSTRIES INC. - 2 INCH CATHODIC TEST STATIONS OR APPROVED EQUAL.
8. THE 15" ABS PLASTIC BOX SHALL BE A FLANGED TOP FOR INSTALLATION AT GROUND LEVEL.
9. ALL TERMINALS ARE TO BE MADE OF SOLID BRASS.
10. PLASTIC LIDS SHALL BE COLOR BLUE AND MARKED "WATER".
11. TEST TERMINALS ARE TO BE INCORPORATED WITH HANDLEY VALVE BOXES.
12. BURY SPLICE SHALL BE 3M DIRECT BURY SPLICE (DBR) OR APPROVED EQUAL.
13. TEST STATIONS SHALL BE INSTALLED AT EACH FIRE HYDRANT LOCATION, AND LINE GATE VALVES. ONLY ONE TEST STATION IS REQUIRED AT A VALVE CLUSTER OF TWO OR MORE.
14. HYDRANT SHALL BE GREASED WITH FOOD GRADE APPROVED LUBRICANT.
15. WHERE NECESSARY, SWIVEL-LOCK PIPING CAN BE USED BETWEEN TEE AND VALVE, OR VALVE AND HYDRANT.

REVISION NOTE:	1/27/2022
DRAWING NAME:	W02

JONAH WATER SUD
WATER CONSTRUCTION STANDARD DETAILS

TYPICAL FIRE HYDRANT, TRACER WIRE, AND TEST STATION DETAIL

SCALE:	DATE:
N.T.S.	7-2-13
DRAWN BY:	APPROVED BY:
M.W.W.	W.E.A.

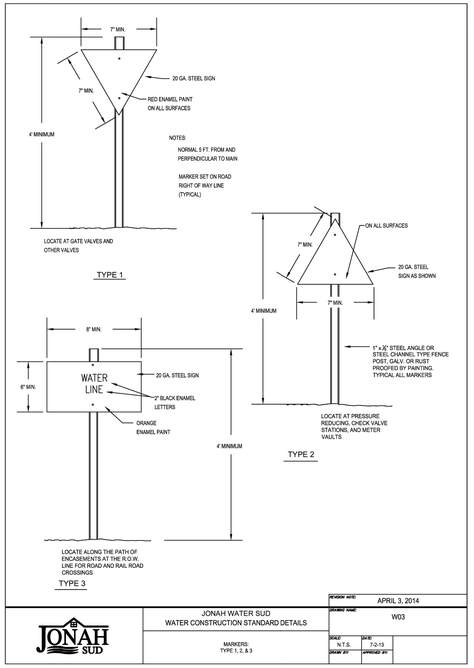

REVISION NOTE:	APRIL 3, 2014
DRAWING NAME:	W03

JONAH WATER SUD
WATER CONSTRUCTION STANDARD DETAILS

MARKERS: TYPE 1, 2, & 3

SCALE:	DATE:
N.T.S.	7-2-13
DRAWN BY:	APPROVED BY:
M.W.W.	W.E.A.

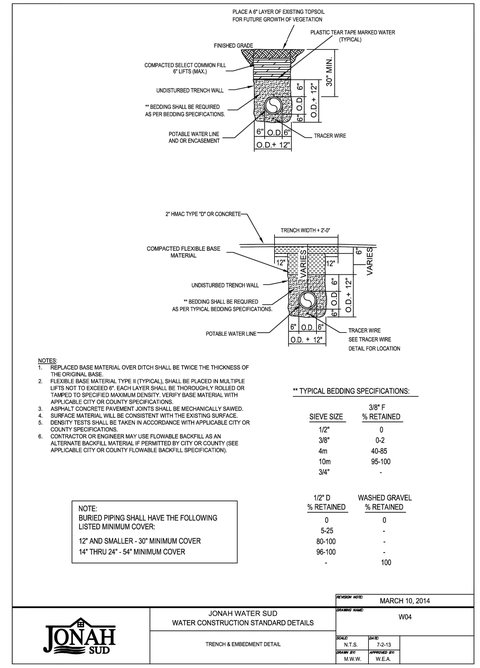

NOTES:
1. REPLACED BASE MATERIAL OVER DITCH SHALL BE TWICE THE THICKNESS OF THE ORIGINAL BASE.
2. FLEXIBLE BASE MATERIAL TYPE II (TYPICAL), SHALL BE PLACED IN MULTIPLE LIFTS NOT TO EXCEED 8". EACH LAYER SHALL BE THOROUGHLY ROLLED OR TAMPED TO 95%OF ASD MAXIMUM DENSITY. VERIFY BASE MATERIAL WITH APPLICABLE CITY OR COUNTY SPECIFICATIONS.
3. ASPHALT CONCRETE PAVEMENT JOINTS SHALL BE MECHANICALLY SAWED.
4. SURFACE MATERIAL WILL BE CONSISTENT WITH THE EXISTING SURFACE.
5. DENSITY TESTS SHALL BE TAKEN IN ACCORDANCE WITH APPLICABLE CITY OR COUNTY SPECIFICATIONS.
6. CONTRACTOR OR ENGINEER MAY USE FLOWABLE BACKFILL AS AN ALTERNATE BACKFILL MATERIAL IF PERMITTED BY CITY OR COUNTY (SEE APPLICABLE CITY OR COUNTY FLOWABLE BACKFILL SPECIFICATION).

** TYPICAL BEDDING SPECIFICATIONS:

SIEVE SIZE	3/8" F % RETAINED
1/2"	0
3/8"	0-2
4m	40-85
10m	95-100
3/4"	-

1/2" D % RETAINED	WASHED GRAVEL % RETAINED
0	0
5-25	-
80-100	-
96-100	-
-	100

NOTE:
BURIED PIPING SHALL HAVE THE FOLLOWING LISTED MINIMUM COVER:
12" AND SMALLER - 30" MINIMUM COVER
14" THRU 24" - 54" MINIMUM COVER

REVISION NOTE:	MARCH 10, 2014
DRAWING NAME:	W04

JONAH WATER SUD
WATER CONSTRUCTION STANDARD DETAILS

TRENCH & EMBEDMENT DETAIL

SCALE:	DATE:
N.T.S.	7-2-13
DRAWN BY:	APPROVED BY:
M.W.W.	W.E.A.

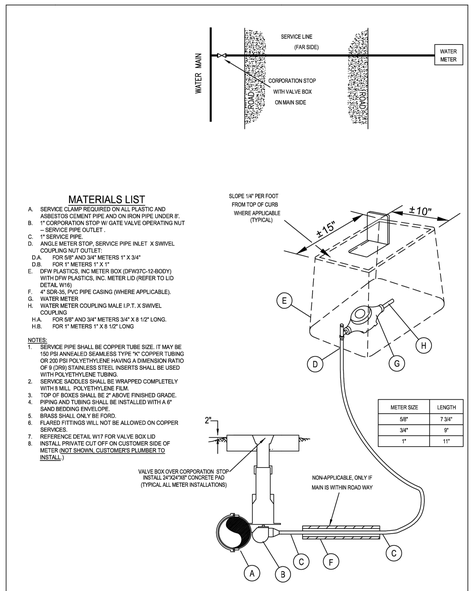

MATERIALS LIST

A. SERVICE CLAMP REQUIRED ON ALL PLASTIC AND ASBESTOS CEMENT PIPE AND ON IRON PIPE UNDER 8".
B. 1" CORPORATION STOP W/ GATE VALVE OPERATING NUT
   B.A. SERVICE PIPE OUTLET:
C. 1" SERVICE PIPE
D. ANGLE METER STOP, SERVICE PIPE INLET X SWIVEL COUPLING NUT OUTLET:
   D.A. FOR 5/8" AND 3/4" METERS 1" X 3/4"
   D.B. FOR 1" METERS 1" X 1"
E. DFW PLASTICS, INC METER BOX (DFW37C-12-BODY) WITH DFW PLASTICS, INC. METER LID (REFER TO LID DETAIL W16)
F. 4" SDR-35, PVC PIPE CASING (WHERE APPLICABLE).
G. WATER METER
H. WATER METER COUPLING MALE I.P.T. X SWIVEL COUPLING
   H.A. FOR 5/8" AND 3/4" METERS 3/4" X 8 1/2" LONG,
   H.B. FOR 1" METERS 1" X 8 1/2" LONG

METER SIZE	LENGTH
5/8"	7 3/4"
3/4"	9"
1"	11"

NOTES:
1. SERVICE PIPE SHALL BE COPPER TUBE SIZE. IT MAY BE 150 PSI ANNEALED SEAMLESS TYPE "K" COPPER TUBING OR 200 PSI POLYETHYLENE HAVING A DIMENSION RATIO OF 9 (CRS) STAINLESS STEEL INSERTS SHALL BE USED WITH POLYETHYLENE TUBING.
2. SERVICE SADDLES SHALL BE WRAPPED COMPLETELY WITH 8 MILL POLYETHYLENE FILM.
3. TOP OF BOXES SHALL BE 2" ABOVE FINISHED GRADE.
4. PIPING AND TUBING SHALL BE INSTALLED WITH A 6" SAND BEDDING ENVELOPE.
5. BRASS SHALL ONLY BE FORD.
6. FLARED FITTINGS WILL NOT BE ALLOWED ON COPPER SERVICES.
7. REFERENCE DETAIL W17 FOR VALVE BOX LID
8. INSTALL PRIVATE CUT OFF ON CUSTOMER SIDE OF METER (NOT SHOWN, CUSTOMER'S PLUMBER TO INSTALL)

REVISION NOTE:	4/22/22
DRAWING NAME:	W05

JONAH WATER SUD
WATER CONSTRUCTION STANDARD DETAILS

STANDARD INSTALLATION DETAIL FOR ONE-¾", 1", OR 1" METERS

SCALE:	DATE:
N.T.S.	7-2-13
DRAWN BY:	APPROVED BY:
M.W.W.	W.E.A.

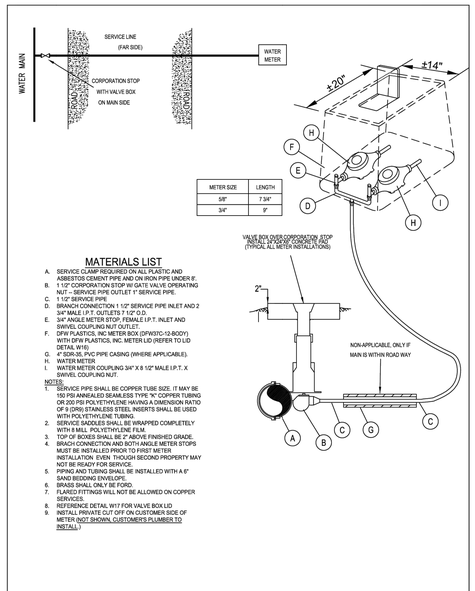

METER SIZE	LENGTH
5/8"	7 3/4"
3/4"	9"

MATERIALS LIST

A. SERVICE CLAMP REQUIRED ON ALL PLASTIC AND ASBESTOS CEMENT PIPE AND ON IRON PIPE UNDER 8".
B. 1 1/2" CORPORATION STOP W/ GATE VALVE OPERATING NUT – SERVICE PIPE OUTLET 1" SERVICE PIPE.
C. 1 1/2" SERVICE PIPE
D. BRANCH CONNECTION 1 1/2" SERVICE PIPE INLET AND 2 3/4" MALE I.P.T. OUTLETS 7 1/2" O.D.
E. 3/4" ANGLE METER STOP, FEMALE I.P.T. INLET AND SWIVEL COUPLING NUT OUTLET.
F. DFW PLASTICS, INC METER BOX (DFW37C-12-BODY) WITH DFW PLASTICS, INC. METER LID (REFER TO LID DETAIL W16)
G. 4" SDR-35, PVC PIPE CASING (WHERE APPLICABLE).
H. WATER METER
I. WATER METER COUPLING 3/4" X 8 1/2" MALE I.P.T. X SWIVEL COUPLING NUT.

NOTES:
1. SERVICE PIPE SHALL BE COPPER TUBE SIZE. IT MAY BE 150 PSI ANNEALED SEAMLESS TYPE "K" COPPER TUBING OR 200 PSI POLYETHYLENE HAVING A DIMENSION RATIO OF 9 (CRS) STAINLESS STEEL INSERTS SHALL BE USED WITH POLYETHYLENE TUBING.
2. SERVICE SADDLES SHALL BE WRAPPED COMPLETELY WITH 8 MILL POLYETHYLENE FILM.
3. TOP OF BOXES SHALL BE 2" ABOVE FINISHED GRADE.
4. BRACH CONNECTION AND BOTH ANGLE METER STOPS MUST BE INSTALLED PRIOR TO FIRST METER INSTALLATION EVEN THOUGH SECOND PROPERTY MAY NOT BE READY FOR SERVICE.
5. PIPING AND TUBING SHALL BE INSTALLED WITH A 6" SAND BEDDING ENVELOPE.
6. BRASS SHALL ONLY BE FORD.
7. FLARED FITTINGS WILL NOT BE ALLOWED ON COPPER SERVICES.
8. REFERENCE DETAIL W17 FOR VALVE BOX LID
9. INSTALL PRIVATE CUT OFF ON CUSTOMER SIDE OF METER (NOT SHOWN, CUSTOMER'S PLUMBER TO INSTALL)

REVISION NOTE:	4/22/22
DRAWING NAME:	W06

JONAH WATER SUD
WATER CONSTRUCTION STANDARD DETAILS

STANDARD INSTALLATION DETAIL FOR TWO-¾" OR-¾" METERS

SCALE:	DATE:
N.T.S.	7-2-13
DRAWN BY:	APPROVED BY:
M.W.W.	W.E.A.

NOTES:
1. REPLACED BASE MATERIAL OVER DITCH SHALL BE TWICE THE THICKNESS OF THE ORIGINAL BASE.
2. BASE MATERIAL SHALL BE PLACED IN TWO OR THREE LAYERS AND EACH LAYER THOROUGHLY ROLLED OR TAMPED TO 95% MAXIMUM DENSITY.
3. ASPHALT CONCRETE PAVEMENT JOINTS SHALL BE MECHANICALLY SAWED.
4. SURFACE MATERIAL WILL BE CONSISTENT WITH THE EXISTING SURFACE.
5. A MINIMUM OF TWO DENSITY TESTS SHALL BE TAKEN FOR EACH SIX (6) INCH LIFT OF SUBGRADE AND EACH OPEN CUT CROSSING WHEN THE SPECIFIED COMPACTED BASE IS GREATER THAN SIX AND ONE-HALF (6 1/2") INCHES THE BASE SHALL BE CONSTRUCTED IN TWO OR MORE COURSES. PROCTORS FOR MATERIALS USED IN BACKFILLING SHALL BE OBTAINED BY A CERTIFIED LABORATORY. DENSITY TEST SHALL BE CONDUCTED BY A CERTIFIED LABORATORY OF THE PERMITTEE'S CONSULTANTS. THE PERCENTAGE OF MAXIMUM DENSITY REQUIRED SHALL BE IN ACCORDANCE WITH THE LATEST EDITION OF "TxDOT STANDARD SPECIFICATIONS FOR ROAD AND BRIDGE CONSTRUCTION" AT THE TIME THE PERMIT WAS ISSUED. ALL DENSITY TESTS SHALL BE COMPLETED AND ACCEPTED DENSITY TESTS SHALL BE FURNISHED TO JWSUD. BACKFILL COMPACTION SHALL BE A MINIMUM OF 95% MAXIMUM DENSITY PER AASHTO T-180 SPECIFICATIONS.
6. THESE SPECIFICATIONS MAY BE SUPERSEDED BY THE GOVERNING AGENCY.
7. SELECT MATERIAL TYPE II:
   7.1. TxDOT TYPE A - GRADE 2 OR BETTER CRUSHED LIMESTONE BASE COMPACTED TO 98% OF ASTM D 698 AT OPTIMUM MOISTURE. PROCTOR TO BE PROVIDED BY THE CONTRACTOR TO THE S.U.D. INSPECTOR.

NOTES:
A. VALVE BOX SHALL BE EAST JORDAN IRON WORKS SERIES 8550 TWO PIECE SCREW TYPE OR APPROVED EQUAL HAVING AN ADJUSTABLE RANGE OF +/- 6 INCHES FROM INSTALLED FINISH GRADE.
B. 2. ACCEPTABLE GATE VALVES ARE:
   B.1. AMERICAN FLOW CONTROL - SERIES 2500
   B.2. MUELLER - 2360 SERIES
   B.3. CLOW
C. FOR IN LINE VALVES, USE MECHANICAL JOINT WITH "MEGALUG" RESTRAINTS (OR APPROVED EQUAL) ON EACH SIDE OF VALVE.
D. IF THE TOP OF THE VALVE OPERATING NUT IS MORE THAN 3 FT. BELOW THE FINISHED SURFACE, A OPERATING STEM EXTENSION SHALL BE INSTALLED TO BRING THE OPERATING NUT TO WITHIN 3 FT. OF THE FINISHED SURFACE.
E. VALVE OPERATING NUTS MORE THAN 3 FT. BELOW THE GROUND SURFACE ELEVATION SHALL BE EXTENDED TO BE 2 FT. BELOW GROUND.
F. REFER TO DETAIL W02 FOR TEST STATION REQUIREMENTS.
G. REFER TO DETAIL W09 FOR THRUST BLOCKING AND JOINT RESTRAINT REQUIREMENTS.

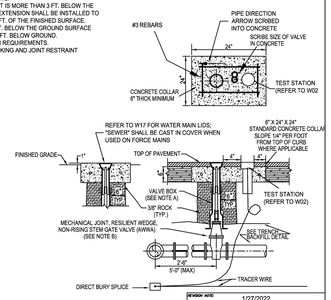

REVISION NOTE:	1/27/2022
DRAWING NAME:	W07

JONAH WATER SUD
WATER CONSTRUCTION STANDARD DETAILS

TYPICAL VALVE SETTING (LESS THAN 24")

SCALE:	DATE:
N.T.S.	7-2-13
DRAWN BY:	APPROVED BY:
M.W.W.	W.E.A.

8834 N. Capital of Texas Hwy.
Suite 140
Austin, Texas 78759
(512)452-0371
FAX(512)454-9933
TBPELS FIRM #2946

GRAY ENGINEERING

NO.	BY	DATE	REVISION DESCRIPTION

RECORD ONLY

LIDELL WALKER PHASE 2B

WATER DETAILS (1 OF 5)

PROJECT NO: 1725-11738
DESIGNED BY: ARS
DRAWN BY: ARS
CHECKED BY: TMH

NOTICE:
ALTERATION OF A SEALED DRAWING WITHOUT PROPER NOTIFICATION TO THE RESPONSIBLE ENGINEER IS A VIOLATION OF THE TEXAS ENGINEERING PRACTICE ACT.

FOR DIFFICULT USE ONLY

Reviewed for Substantial Conformance by City of Hutto

Matt Rector, P.E.
City Engineer
Engineering - City of Hutto

10/01/2024

STATE OF TEXAS
AUSTIN R. SEIFERT
137175
LICENSED PROFESSIONAL ENGINEER
07/29/2024

SHEET 46 OF 52

LIDELL WALKER PHASE 2B
PROJECT NO: 2157-ENG

H:\PROJECTS\1725 - GRBK EDGEWOOD LLC\LIDELL WALKER PHASE 2B\CAD\SHEETS\11738-C-DETL.DWG DATE: 7/29/2024 9:40:39 AM BY: ASEIFERT

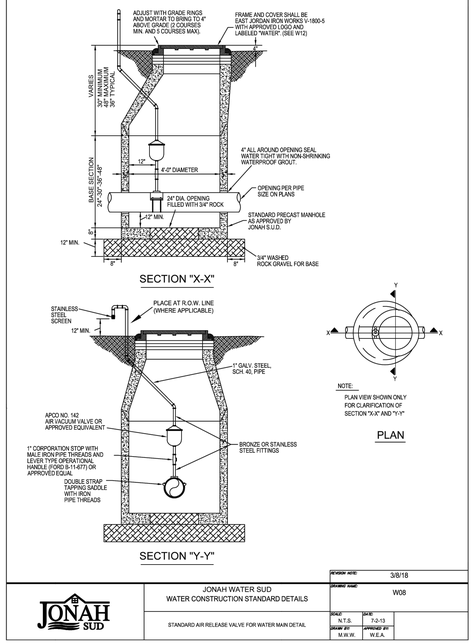

JONAH SUD	JONAH WATER SUD WATER CONSTRUCTION STANDARD DETAILS	REVISION NOTE: 3/8/18 DRAWING NAME: W08
	STANDARD AIR RELEASE VALVE FOR WATER MAIN DETAIL	SCALE: N.T.S. DATE: 7-2-13 DRAWN BY: M.W.W. APPROVED BY: W.E.A.

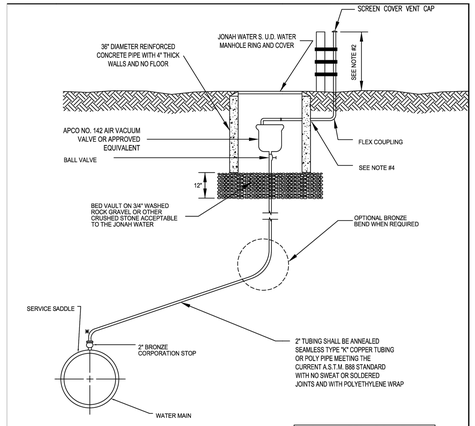

* THREAD TO COMPRESSION BRASS ELBOW ALLOWED IF NECESSARY DUE TO DEPTH LIMITATIONS.

GALVANIZED IRON PIPE	
AIR VALVE	BALL VALVE
1"	1"
2"	2"

NOTES:

1. AIR RELEASE VALVE VAULT FOR USE IN NON-PAVEMENT AREAS.
2. EXTERIOR SURFACES OF EXPOSED AIR VENT PIPE AND STEEL SUPPORT PIPE SHALL BE CLEANED, PREPPED, PRIMED AND PAINTED WITH RUST-OLEUM SAFETY BLUE ACRYLIC #5225402 PAINT, OR APPROVED EQUAL.
3. THE AIR VENT PIPE SHALL BE 5' MINIMUM IN HEIGHT AND SHALL BE SUPPORTED BY A 4" STEEL PIPE, WHICH IS TO BE SET IN 2500 P.S.I. CONCRETE, FILLED WITH CONCRETE AND SUPPORTED WITH 3 STAINLESS STEEL CLAMPS.
4. CONCRETE VAULT PENETRATION SHALL BE CORE BIT DRILLED. VOID SHALL BE FILLED BY PRESS-SEAL GASKET CORP. PSX RESILIENT CONNECTOR MEETING A.S.T.M. C923, OR APPROVED EQUAL.
5. PIPE SUPPORT TO BE PROVIDED FOR THE AIR RELEASE VALVE.

JONAH SUD	JONAH WATER SUD WATER CONSTRUCTION STANDARD DETAILS	REVISION NOTE: DRAWING NAME: W08.1
	"MODIFIED" AIR RELEASE VALVE FOR WATER MAIN DETAIL	SCALE: N.T.S. DATE: 1/8/21 DRAWN BY: M.W.W. APPROVED BY: M.W.W.

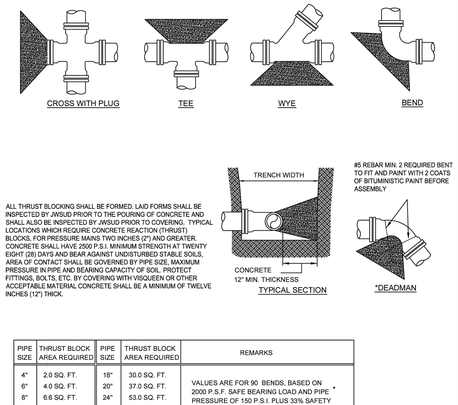

ALL THRUST BLOCKING SHALL BE FORMED. LAID FORMS SHALL BE INSPECTED BY JWSUD PRIOR TO THE POURING OF CONCRETE AND SHALL ALSO BE INSPECTED BY JWSUD PRIOR TO COVERING. TYPICAL LOCATIONS WHICH REQUIRE CONCRETE REACTION (THRUST) BLOCKS, FOR PRESSURE MAINS TWO INCHES (2") AND GREATER. CONCRETE SHALL HAVE 2500 P.S.I. MINIMUM STRENGTH AT TWENTY EIGHT (28) DAYS AND BEAR AGAINST UNDISTURBED STABLE SOILS, AREA OF CONTACT SHALL BE GOVERNED BY PIPE SIZE, MAXIMUM PRESSURE IN PIPE AND BEARING CAPACITY OF SOIL. PROTECT FITTINGS, BOLTS, ETC. BY COVERING WITH VISQUEEN OR OTHER ACCEPTABLE MATERIAL CONCRETE SHALL BE A MINIMUM OF TWELVE INCHES (12") THICK.

PIPE SIZE	THRUST BLOCK AREA REQUIRED	PIPE SIZE	THRUST BLOCK AREA REQUIRED	REMARKS
4"	2.0 SQ. FT.	18"	30.0 SQ. FT.	VALUES ARE FOR 90 BENDS, BASED ON 2000 P.S.F. SAFE BEARING LOAD AND PIPE * PRESSURE OF 150 P.S.I. PLUS 33% SAFETY FACTOR FOR OTHER SOILS AND PRESSURES, THE AREA REQUIRED IS IN DIRECT PROPORTION.
6"	4.0 SQ. FT.	20"	37.0 SQ. FT.	
8"	6.6 SQ. FT.	24"	53.0 SQ. FT.	
10"	10.0 SQ. FT.	27"	80.0 SQ. FT.	
12"	14.0 SQ. FT.	30"	98.0 SQ. FT.	
14"	18.0 SQ. FT.	36"	127.0 SQ. FT.	
16"	24.0 SQ. FT.			

*THE ENGINEER OF RECORD SHALL CALCULATE THE SIZE OF THE DEADMAN REQUIRED AS WELL AS ANY INSTALLATION WHICH IS NOT COVERED BY THE ABOVE.

NOTE:

- ALL 3" AND LARGER ELLS, TEES AND BENDS SHALL BE MJ DUCTILE IRON FITTINGS WITH "MEGALUG" OR APPROVED EQUAL JOINT RESTRAINTS - CONCRETE THRUST BLOCKING AS SHOWN IN THE ABOVE TABLE SHALL BE INSTALLED. JOINT RESTRAINTS SHALL ALSO BE USED FOR ANY PIPE LENGTH LESS THAN ONE FULL PIPE JOINT AWAY FROM EACH M.J. FITTING.
- ALL 2-1/2" AND SMALLER CAPS, ELLS, TEES AND 45° BENDS SHALL BE HARCO PUSH-ON DUCTILE IRON FITTINGS WITH KNUCKLE JOINT RESTRAINT OR APPROVED EQUAL - CONCRETE THRUST BLOCKING AS SHOWN IN THE ABOVE TABLE SHALL BE INSTALLED.
- OTHER THRUST BLOCKING DIMENSIONS ACCEPTED IF DESIGNED BY LICENSED ENGINEER.

JONAH SUD	JONAH WATER SUD WATER CONSTRUCTION STANDARD DETAILS	REVISION NOTE: JANUARY 13, 2017 DRAWING NAME: W09
	TYPICAL THRUST BLOCKS FOR WATER AND FORCE MAINS DETAIL	SCALE: N.T.S. DATE: 7-2-13 DRAWN BY: M.W.W. APPROVED BY: W.E.A.

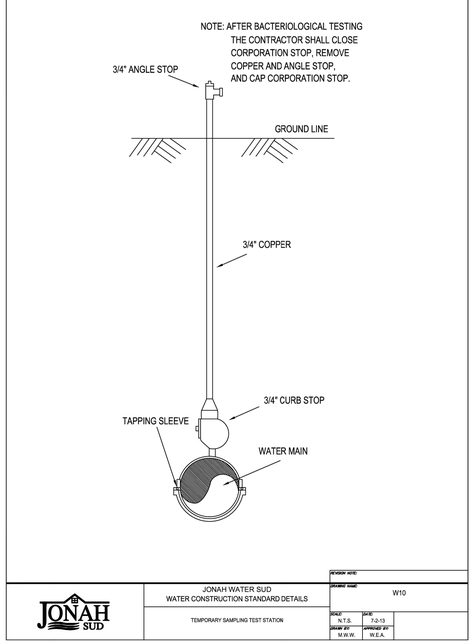

JONAH SUD	JONAH WATER SUD WATER CONSTRUCTION STANDARD DETAILS	REVISION NOTE: DRAWING NAME: W10
	TEMPORARY SAMPLING TEST STATION	SCALE: N.T.S. DATE: 7-2-13 DRAWN BY: M.W.W. APPROVED BY: W.E.A.

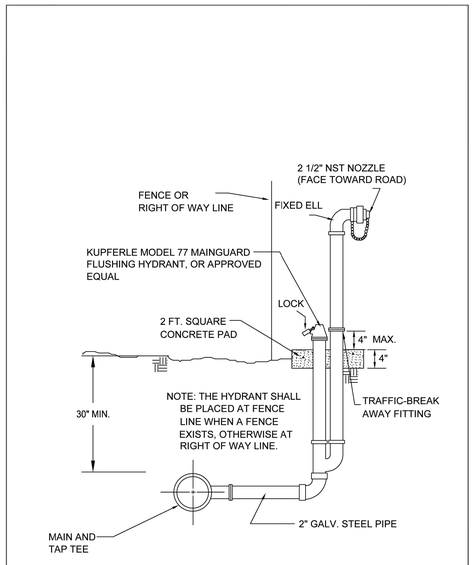

JONAH SUD	JONAH WATER SUD WATER CONSTRUCTION STANDARD DETAILS	REVISION NOTE: DRAWING NAME: W11
	FIRE TYPE BLOW OFF HYDRANT	SCALE: N.T.S. DATE: 7-2-13 DRAWN BY: M.W.W. APPROVED BY: W.E.A.

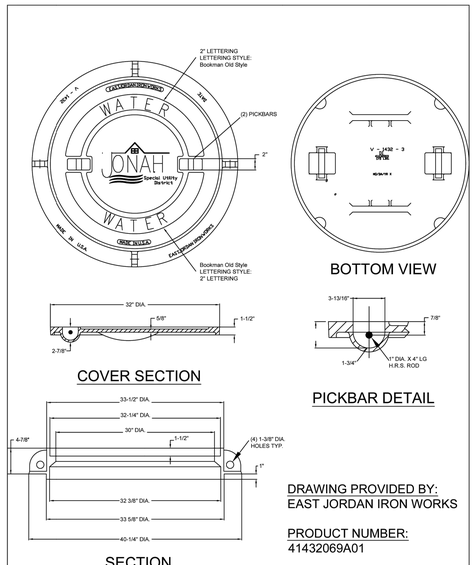

DRAWING PROVIDED BY:
EAST JORDAN IRON WORKS

PRODUCT NUMBER:
41432069A01

JONAH SUD	JONAH WATER SUD WATER CONSTRUCTION STANDARD DETAILS	REVISION NOTE: 9/28/2018 DRAWING NAME: W12
	WATER MANHOLE LID	SCALE: N.T.S. DATE: 7-2-13 DRAWN BY: M.W.W. APPROVED BY: W.E.A.

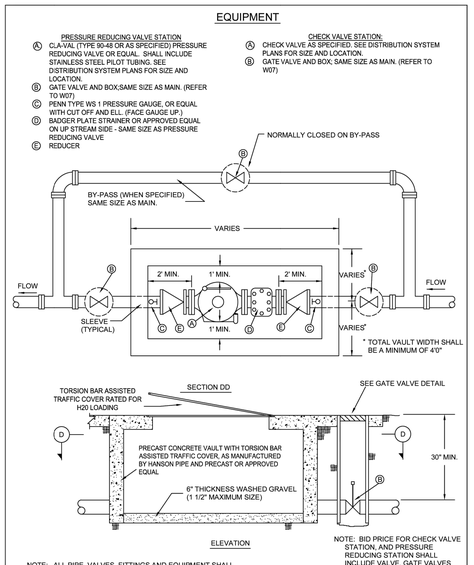

NOTE: ALL PIPE, VALVES, FITTINGS AND EQUIPMENT SHALL CONFORM TO THE CURRENT APPLICABLE A.W.W.A. STANDARDS.

NOTE: BID PRICE FOR CHECK VALVE STATION, AND PRESSURE REDUCING STATION SHALL INCLUDE VALVE, GATE VALVES WITH BOX, PIPING, AND VAULT. (INCLUDING BY-PASS WHERE REQUIRED)

JONAH SUD	JONAH WATER SUD WATER CONSTRUCTION STANDARD DETAILS	REVISION NOTE: May 29, 2019 DRAWING NAME: W13
	PRESSURE REDUCING AND/OR CHECK VALVE STATION	SCALE: N.T.S. DATE: 7-2-13 DRAWN BY: M.W.W. APPROVED BY: W.E.A.

8834 N. Capital of Texas Hwy.
Suite 140
Austin, Texas 78759
(512)452-0371
FAX(512)454-9933
TBPELS FIRM #2946
GRAY ENGINEERING

NO.	BY	DATE	REVISION DESCRIPTION

RECORD ONLY

LIDELL WALKER PHASE 2B

WATER DETAILS (2 OF 5)

PROJECT NO: 1725-11738
DESIGNED BY: ARS
DRAWN BY: ARS
CHECKED BY: TMH

NOTICE:
ALTERATION OF A SEALED DRAWING WITHOUT PROPER NOTIFICATION TO THE RESPONSIBLE ENGINEER IS A VIOLATION OF THE TEXAS ENGINEERING PRACTICE ACT.

FOR OFFICIAL USE ONLY
Reviewed for Substantial Conformance by City of Hutto
CITY OF HUTTO
Matt Rector, P.E.
City Engineer
Engineering - City of Hutto
10/01/2024

STATE OF TEXAS
AUSTIN R. SEIFERT
137175
LICENSED PROFESSIONAL ENGINEER
07/29/2024

SHEET 47 OF 52

PROJECT NO: 2157-ENG
LIDELL WALKER PHASE 2B

H:\PROJECTS\1725 - GRBK EDGEWOOD LLC\LIDELL WALKER PHASE 2B\CAD\SHEETS\11738-C-DETL.DWG DATE: 7/29/2024 9:40:49 AM BY: ASEIFERT

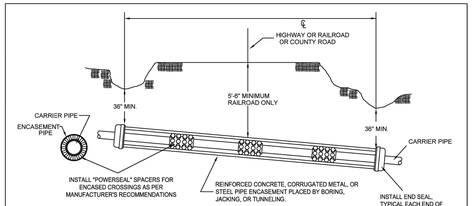

NOTE:
ALL CARRIER PIPE THROUGH ENCASEMENTS SHALL BE RESTRAINED JOINT TYPE OR FUSIBLE ENDS TYPE PIPE AND SHALL BE INCLUDED IN THE PRICE OF THE CROSSING.

COUNTY ROAD, HIGHWAY AND RAILROAD CROSSINGS

STEEL ENCASEMENT WALL THICKNESS CHART FOR SMOOTH STEEL CASING PIPE WITH A MINIMUM YIELD STRENGTH OF 35,000 PSI.		
MINIMUM THICKNESS	DIAMETER OF CASING PIPE.	
0'-0.2500"	0'-0 1/4"	12" OR LESS
0'-0.3125"	0'-0 5/16"	OVER 12" TO 18"
0'-0.3750"	0'-0 3/8"	OVER 18" TO 22"
0'-0.4375"	0'-0.7/16"	OVER 22" TO 28"
0'-0.5000"	0'-0 1/2"	OVER 28" TO 34"
0'-0.5625"	0'-0 9/16"	OVER 34" TO 42"
0'-0.6250"	0'-0 5/8"	OVER 42" TO 48"

NOTE:
1. ALL CARRIER PIPING SHALL BE RESTRAINED JOINT TYPE OR BUTT-FUSIBLE TYPE OF THE SAME SIZE AND THE SAME PRESSURE CLASS AT MINIMUM OF THE APPLICABLE PIPELINE.
2. OPEN CUT ENCASEMENT PIPE SHALL HAVE THE SAME TRENCH AND EMBEDMENT DETAILS AS AS SHOWN FOR PIPELINES.
3. DO NOT USE WEDGES BETWEEN TOP OF CARRIER PIPE AND INSIDE OF CASING TO KEEP THE CARRIER PIPE FROM MOVING.
4. PRIOR TO INSERTING CARRIER PIPE, ANY WATER SHOULD BE PUMPED OUT OF THE CASING PIPE SO THAT NO MORE THAN A FEW INCHES OF WATER REMAINS.
5. SPACERS SHALL BE REQUIRED WITHIN AT LEAST 3 FEET FROM BOTH ENDS OF THE ENCASEMENT PIPE.
6. ENCASEMENT PIPE SHALL BE SMOOTH STEEL, 35,000 PSI YIELD STRENGTH WITH WALL THICKNESS ACCORDING TO THE WALL THICKNESS CHART.
7. THE RESTRAINED JOINT CARRIER PIPE SHALL EXTEND A MINIMUM OF 10 L.F. PAST BOTH ENDS OF THE ENCASEMENT PIPING BEFORE TRANSITIONING BACK TO NON-JOINT RESTRAINED PIPING.

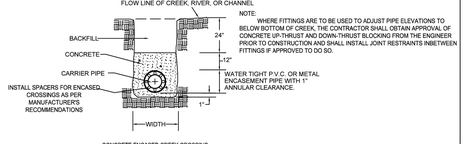

CONCRETE ENCASED CREEK CROSSING

NOTE:
WHERE FITTINGS ARE TO BE USED TO ADJUST PIPE ELEVATIONS TO BELOW BOTTOM OF CREEK, THE CONTRACTOR SHALL OBTAIN APPROVAL OF CONCRETE UP-THRUST AND DOWN-THRUST BLOCKING FROM THE ENGINEER PRIOR TO CONSTRUCTION AND SHALL INSTALL JOINT RESTRAINTS INBETWEEN FITTINGS IF APPROVED TO DO SO.

JONAH SUD

JONAH WATER SUD
WATER CONSTRUCTION STANDARD DETAILS

DRAWING NAME: W14

INSTALLATION OF PIPE THROUGH CASING/CREEK CROSSING

SCALE: N.T.S. | DATE: 7-2-13
DRAWN BY: M.W.W. | APPROVED BY: W.E.A.

WATER MAINS AND SANITARY SEWERS SHALL BE INSTALLED NO CLOSER TO EACH OTHER THAN 9 FT. IN ALL DIRECTIONS AND PARALLEL LINES MUST BE INSTALLED IN SEPARATE TRENCHES. WHERE THE 9 FT. SEPARATION CANNOT BE ACHIEVED, THE FOLLOWING TABLE SHALL GOVERN:

CONDITION	LOCATION	MATERIAL: WATER	MATERIAL: SEWER	MINIMUM SEPARATION: VERT.	MINIMUM SEPARATION: HORIZ.	COMMENTS
NEW WATER AND NEW SEWER						
SEWER FORCE MAIN AND GRAVITY SANITARY SEWER PARALLEL TO WATER MAIN	WATER ABOVE SEWER	STD.	C.I., D.I., P.V.C., 150 P.S.I.	2'	4'	SEPARATE TRENCHES
GRAVITY SANITARY SEWER CROSSING WATER MAIN	WATER ABOVE SEWER OR SEWER ABOVE WATER	STD.	C.I., D.I., P.V.C., 150 P.S.I.	6"	NA	CENTER ONE JOINT OF SEWER PIPE ON WATER MAIN
GRAVITY SANITARY SEWER CROSSING WATER MAIN	WATER ABOVE SEWER	STD.	ABS., CLAY CONCRETE COMPOSITE	2'	NA	CEMENT STABILIZE SAND BACKFILL INITIAL BACKFILL ZONE OF SEWER FOR 9 FT. EACH SIDE OF CROSSING. CENTER ONE JOINT OF SEWER PIPE ON WATER MAIN.
NEW WATER AND EXISTING SANITARY SEWER						
NEW WATER PARALLEL TO EXISTING SEWER	WATER ABOVE SEWER	STD.	CLAY, CONC., ABS., C.I., D.I., P.V.C.	2'	4'	IF SEWER SHOWS NO SIGN OF LEAKAGE, THEN LEAVE SEWER ALONE. IF SEWER SHOWS SIGNS OF LEAKAGE, THEN REPAIR OR REPLACE.
NEW WATER CROSSING EXISTING SEWER	WATER ABOVE SEWER	STD.	ABS., CLAY., CONCRETE COMPOSITE	2'	NA	IF SEWER SHOWS NO SIGN OF LEAKAGE, THEN LEAVE SEWER ALONE. IF SEWER SHOWS SIGNS OF LEAKAGE, THEN REPAIR OR REPLACE.
NEW WATER CROSSING EXISTING SEWER	SEWER ABOVE WATER	STD.	ABS., CLAY., CONCRETE, COMPOSITE	2'	NA	REPLACE EXISTING SEWER WITH ONE JOINT C.I., D.I., P.V.C. - 150 P.S.I., CENTERING OVER WATER LINE.
NEW WATER PARALLEL TO EXISTING SEWER	SEWER ABOVE WATER	STD.	ABS., CLAY., CONCRETE COMPOSITE	2'	4'	REPLACE EXISTING SEWER WITH C.I., D.I., P.V.C.-150 P.S.I. OR CEMENT STABILIZED SAND BACK FILL IN INITIAL BACKFIELD ZONE OF SEWER WHERE PARALLEL CLOSER THAN 9 FT. OR ENCASE THE WATER IN 150 P.S.I. PIPE TWO NOMINAL SIZES LARGER.
EXISTING WATER AND NEW SANITARY SEWER						
NEW SEWER PARALLEL TO EXISTING WATER	WATER ABOVE SEWER OR SEWER ABOVE WATER	STD.	C.I., D.I., P.V.C., 150 P.S.I.	2'	4'	SEPARATE TRENCHES
NEW SEWER CROSSING EXISTING WATER	WATER ABOVE SEWER OR SEWER ABOVE WATER	STD.	C.I., D.I., P.V.C., 150 P.S.I.	6"	NA	CENTER ONE JOINT OF SEWER PIPE ON WATER MAIN
NEW SEWER CROSSING EXISTING WATER	WATER ABOVE SEWER	STD.	ABS., CLAY., CONCRETE COMPOSITE	2'	NA	CEMENT STABILIZE SAND BACKFIELD INITIAL ZONE OF SEWER FOR 9 FT. EACH SIDE OF CROSSING. CENTER ONE JOINT OF SEWER PIPE ON WATER MAIN.

FIRE HYDRANTS SHALL NOT BE LOCATED WITHIN 9 FT. VERTICALLY OR HORIZONTALLY OF ANY SANITARY SEWER, REGARDLESS OF CONSTRUCTION.
WATER MAINS SHALL NOT BE INSTALLED CLOSER THAN 10 FT. TO SEPTIC TANK DRAINFIELDS.

JONAH SUD

JONAH WATER SUD
WATER CONSTRUCTION STANDARD DETAILS

DRAWING NAME: W15

TABLE FOR SEPARATION OF WATER AND SEWER PIPE LINES

SCALE: N.T.S. | DATE: 7-2-13
DRAWN BY: M.W.W. | APPROVED BY: W.E.A.

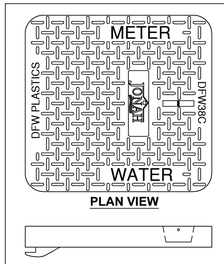

PLAN VIEW

COVER SECTION

METER LID DETAIL FOR DUAL 5/8", 3/4", OR 1" METERS

DRAWING PROVIDED BY:
DFW PLASTICS, INC.
PRODUCT NUMBER:
DFW38C-14-AF3P JSUD

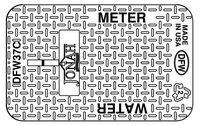

PLAN VIEW



COVER SECTION

METER LID DETAIL FOR ONE 5/8", 3/4", OR 1" METER

DRAWING PROVIDED BY:
DFW PLASTICS, INC.
PRODUCT NUMBER:
DFW37C-12-AF3P JSUD

JONAH SUD

JONAH WATER SUD
WATER CONSTRUCTION STANDARD DETAILS

REVISION NOTE: 9/25/19
DRAWING NAME: W16

METER LID DETAILS

SCALE: N.T.S. | DATE: 7-2-13
DRAWN BY: M.W.W. | APPROVED BY: W.E.A.



PLAN VIEW

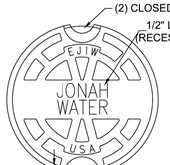

PLAN VIEW

DRAWING PROVIDED BY:
EAST JORDAN IRON WORKS

PRODUCT NUMBER:
06800093

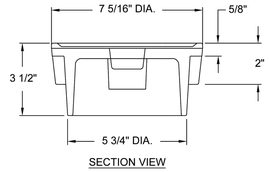

SECTION VIEW

JONAH SUD

JONAH WATER SUD
WATER CONSTRUCTION STANDARD DETAILS

REVISION NOTE: 9/28/2018
DRAWING NAME: W17

VALVE BOX LID

SCALE: N.T.S. | DATE: 7-2-13
DRAWN BY: M.W.W. | APPROVED BY: W.E.A.

Hydrostatic Testing

Hydrostatic testing described in this section shall be conducted with water.

General
The contractor shall provide measurement gauge, pump, pipe, connection, and other necessary apparatuses, unless otherwise specified. Prior to testing the contractor shall place sufficient backfill to prevent pipe movement. The contractor shall ensure that thrust-blocking or other types of restraint systems will provide adequate restraint prior to pressurizing the pipeline.

Test Duration
The duration of the hydrostatic test shall be 2 hours.

Test Pressure
The hydrostatic test pressure shall not be less than 1.25 times the maximum anticipated sustained working pressure at the highest point along the test section unless the pressure exceeds the design pressure limit for any pipe, thrust restraint, valve, fitting or other appurtenance of the test section. In no case shall the test pressure exceed the design pressure limit for any pipe, thrust restraint, valve, fittings, or other appurtenance of the test section.

Test Allowance
The testing allowance shall be defined as the quantity of water that must be supplied to the pipe section being tested to maintain the pressure within 5 psi of the specified hydrostatic test pressure. The installation will not be accepted, by the owner, if the quantity of the makeup water is greater than that determined by the formula below. All visible leaks are to be repair regardless of the amount of leakage.

$$Q=\frac{LxDx\sqrt{P}}{148000}$$

Q = quantity of makeup water in gallons per hour (gal./hr.)
L = length of pipe being tested in feet (ft.)
D = nominal diameter of pipe in inches (in.)
P = average test pressure during the hydrostatic test in pounds per square inch (psi)

Disinfection (Does Not Apply To Sewer Force Mains.)

New mains shall be thoroughly disinfected in accordance with AWWA Standard C651 and then flushed and sampled before being placed in service. Samples shall be collected for microbiological analysis to check the effectiveness of the disinfection procedure. Sampling shall be repeated if contamination persists. A minimum of one sample for each 1,000 feet of completed waterline will be required or at the next available sampling point beyond 1,000 feet as designated by the design engineer.

JONAH SUD

JONAH WATER SUD
WATER CONSTRUCTION STANDARD DETAILS

DRAWING NAME: W18

TESTING REQUIREMENTS FOR PRESSURIZED PIPELINES (POTABLE WATERLINES AND SEWER FORCEMAINS)

SCALE: N.T.S. | DATE: 7-2-13
DRAWN BY: M.W.W. | APPROVED BY: W.E.A.

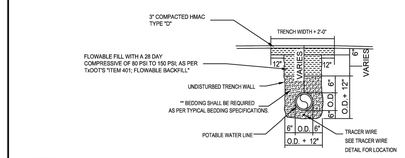

NOTES:
1. FLOWABLE FILL SHALL BE IN ACCORDANCE TO TxDOT'S ITEM 401 "FLOWABLE BACKFILL" SPECIFICATIONS. AS FOUND AT " http://ftp.dot.state.tx.us/pub/txdot-info/des/spec/spectxt.pdf "
2. ASPHALT CONCRETE PAVEMENT JOINTS SHALL BE MECHANICALLY SAWED.
3. SURFACE MATERIAL WILL BE CONSISTENT WITH THE EXISTING SURFACE.
4. DENSITY TESTS SHALL BE TAKEN IN ACCORDANCE WITH APPLICABLE STATE, COUNTY, OR CITY SPECIFICATIONS.

** TYPICAL BEDDING SPECIFICATIONS:

SIEVE SIZE	3/8" F % RETAINED
1/2"	0
3/8"	0-2
4m	40-85
10m	95-100
3/4"	-

1/2" D % RETAINED	WASHED GRAVEL % RETAINED
0	0
5-25	-
80-100	-
96-100	-
-	100

NOTE:
BURIED PIPING SHALL HAVE THE FOLLOWING LISTED MINIMUM COVER:
12" AND SMALLER - 30" MINIMUM COVER
14" THRU 24" - 54" MINIMUM COVER

JONAH SUD

JONAH WATER SUD
WATER CONSTRUCTION STANDARD DETAILS

DRAWING NAME: W19

TRENCH & EMBEDMENT DETAIL FLOWABLE FILL

SCALE: N.T.S. | DATE: 7-11-16
DRAWN BY: M.W.W. | APPROVED BY: M.W.W.

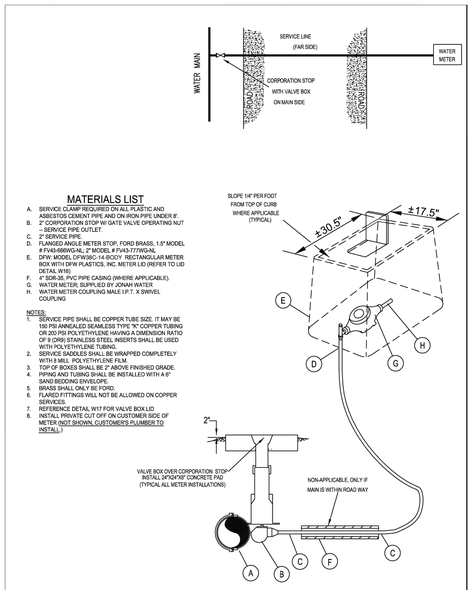

JONAH SUD

JONAH WATER SUD
WATER CONSTRUCTION STANDARD DETAILS

REVISION NOTE: 4/22/22
DRAWING NAME: W20

STANDARD INSTALLATION DETAIL FOR ONE 1.5" AND 2" METERS

SCALE: N.T.S. | DATE: 4-20-17
DRAWN BY: M.W.W. | APPROVED BY: M.W.W.

8834 N. Capital of Texas Hwy.
Suite 140
Austin, Texas 78759
(512)452-0371
FAX(512)454-9933
TBPELS FIRM #2946

GRAY ENGINEERING

NO.	BY	DATE	REVISION DESCRIPTION

RECORD ONLY

LIDELL WALKER PHASE 2B

WATER DETAILS (3 OF 5)

PROJECT NO: 1725-11738
DESIGNED BY: ARS
DRAWN BY: ARS
CHECKED BY: TMH

NOTICE:
ALTERATION OF A SEALED DRAWING WITHOUT PROPER NOTIFICATION TO THE RESPONSIBLE ENGINEER IS A VIOLATION OF THE TEXAS ENGINEERING PRACTICE ACT.

STATE OF TEXAS
AUSTIN R. SEIFERT
137175
LICENSED
PROFESSIONAL ENGINEER
07/29/2024

FOR OFFICIAL USE ONLY
Reviewed for Substantial Conformance by City of Hutto
CITY OF HUTTO
Matt Rector, P.E.
City Engineer
Engineering - City of Hutto
10/01/2024

SHEET 48 OF 52

LIDELL WALKER PHASE 2B
PROJECT NO: 2157-ENG

H:\PROJECTS\1725 - GRBK EDGEWOOD LLC\LIDELL WALKER PHASE 2B\CAD\SHEETS\11738-C-DETL.DWG DATE: 7/29/2024 9:40:58 AM BY: ASEIFERT

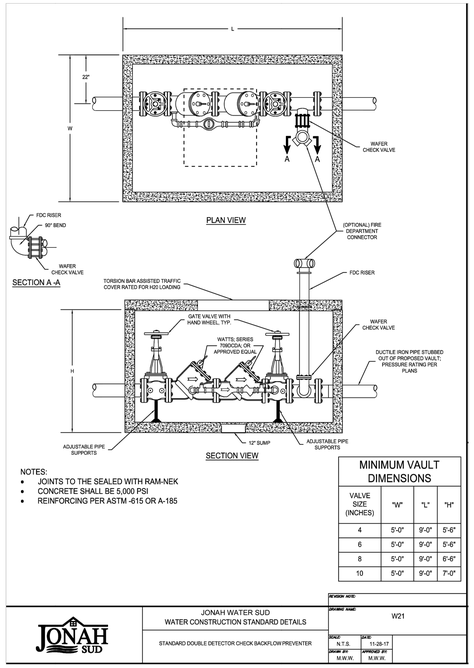

NOTES:
- JOINTS TO THE SEALED WITH RAM-NEK
- CONCRETE SHALL BE 5,000 PSI
- REINFORCING PER ASTM -615 OR A-185

MINIMUM VAULT DIMENSIONS			
VALVE SIZE (INCHES)	"W"	"L"	"H"
4	5'-0"	9'-0"	5'-6"
6	5'-0"	9'-0"	5'-6"
8	5'-0"	9'-0"	6'-6"
10	5'-0"	9'-0"	7'-0"

JONAH SUD

JONAH WATER SUD
WATER CONSTRUCTION STANDARD DETAILS

STANDARD DOUBLE DETECTOR CHECK BACKFLOW PREVENTER

REVISION NOTE:
DRAWING NAME: W21
SCALE: N.T.S. DATE: 11-26-17
DRAW BY: M.W.W. APPROVED BY: M.W.W.

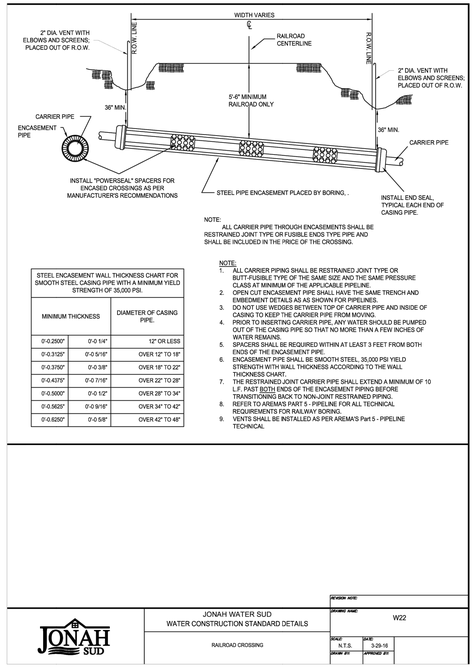

NOTE:
ALL CARRIER PIPE THROUGH ENCASEMENTS SHALL BE RESTRAINED JOINT TYPE OR FUSIBLE ENDS TYPE PIPE AND SHALL BE INCLUDED IN THE PRICE OF THE CROSSING.

STEEL ENCASEMENT WALL THICKNESS CHART FOR SMOOTH STEEL CASING PIPE WITH A MINIMUM YIELD STRENGTH OF 35,000 PSI.	
MINIMUM THICKNESS	DIAMETER OF CASING PIPE.
0'-0.2500"	0'-0 1/4" – 12" OR LESS
0'-0.3125"	0'-0 5/16" – OVER 12" TO 18"
0'-0.3750"	0'-0 3/8" – OVER 18" TO 22"
0'-0.4375"	0'-0 7/16" – OVER 22" TO 28"
0'-0.5000"	0'-0 1/2" – OVER 28" TO 34"
0'-0.5625"	0'-0 9/16" – OVER 34" TO 42"
0'-0.6250"	0'-0 5/8" – OVER 42" TO 48"

NOTE:
1. ALL CARRIER PIPING SHALL BE RESTRAINED JOINT TYPE OR BUTT-FUSIBLE TYPE OF THE SAME SIZE AND THE SAME PRESSURE CLASS AT MINIMUM OF THE APPLICABLE PIPELINE.
2. OPEN CUT ENCASEMENT PIPE SHALL HAVE THE SAME TRENCH AND EMBEDMENT DETAILS AS AS SHOWN FOR PIPELINES.
3. DO NOT USE WEDGES BETWEEN TOP OF CARRIER PIPE AND INSIDE OF CASING TO KEEP THE CARRIER PIPE FROM MOVING.
4. PRIOR TO INSERTING CARRIER PIPE, ANY WATER SHOULD BE PUMPED OUT OF THE CASING PIPE SO THAT NO MORE THAN A FEW INCHES OF WATER REMAINS.
5. SPACERS SHALL BE REQUIRED WITHIN AT LEAST 3 FEET FROM BOTH ENDS OF THE ENCASEMENT PIPE.
6. ENCASEMENT PIPE SHALL BE SMOOTH STEEL, 35,000 PSI YIELD STRENGTH WITH WALL THICKNESS ACCORDING TO THE WALL THICKNESS CHART.
7. THE RESTRAINED JOINT CARRIER PIPE SHALL EXTEND A MINIMUM OF 10 L.F. PAST BOTH ENDS OF THE ENCASEMENT PIPING BEFORE TRANSITIONING BACK TO NON-JOINT RESTRAINED PIPING.
8. REFER TO AREMAS PART 5 - PIPELINE FOR ALL TECHNICAL REQUIREMENTS FOR RAILWAY BORING.
9. VENTS SHALL BE INSTALLED AS PER AREMA'S Part 5 - PIPELINE TECHNICAL

JONAH SUD

JONAH WATER SUD
WATER CONSTRUCTION STANDARD DETAILS

RAILROAD CROSSING

REVISION NOTE:
DRAWING NAME: W22
SCALE: N.T.S. DATE: 3-29-16
DRAW BY: APPROVED BY:

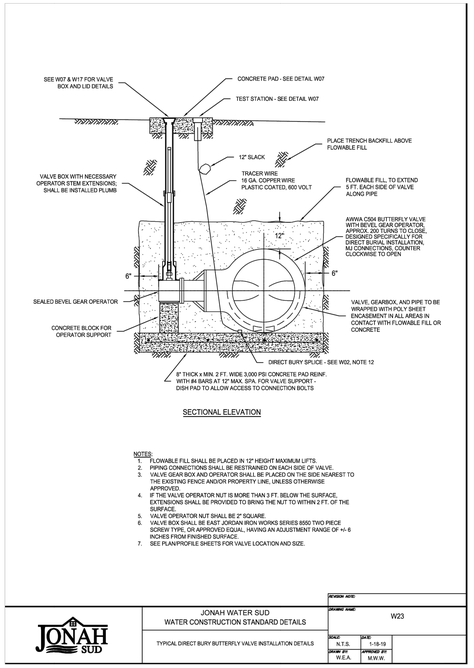

SECTIONAL ELEVATION

NOTES:
1. FLOWABLE FILL SHALL BE PLACED IN 12" HEIGHT MAXIMUM LIFTS.
2. PIPING CONNECTIONS SHALL BE RESTRAINED ON EACH SIDE OF VALVE.
3. VALVE GEAR BOX AND OPERATOR SHALL BE PLACED ON THE SIDE NEAREST TO THE EXISTING FENCE AND/OR PROPERTY LINE, UNLESS OTHERWISE APPROVED.
4. IF THE VALVE OPERATOR NUT IS MORE THAN 3 FT. BELOW THE SURFACE, EXTENSIONS SHALL BE PROVIDED TO BRING THE NUT TO WITHIN 2 FT. OF THE SURFACE.
5. VALVE OPERATOR NUT SHALL BE 2" SQUARE.
6. VALVE BOX SHALL BE EAST JORDAN IRON WORKS SERIES 8550 TWO PIECE SCREW TYPE, OR APPROVED EQUAL, HAVING AN ADJUSTMENT RANGE OF +/- 6 INCHES FROM FINISHED SURFACE.
7. SEE PLAN/PROFILE SHEETS FOR VALVE LOCATION AND SIZE.

JONAH SUD

JONAH WATER SUD
WATER CONSTRUCTION STANDARD DETAILS

TYPICAL DIRECT BURY BUTTERFLY VALVE INSTALLATION DETAILS

REVISION NOTE:
DRAWING NAME: W23
SCALE: N.T.S. DATE: 1-18-19
DRAW BY: W.E.A. APPROVED BY: M.W.W.

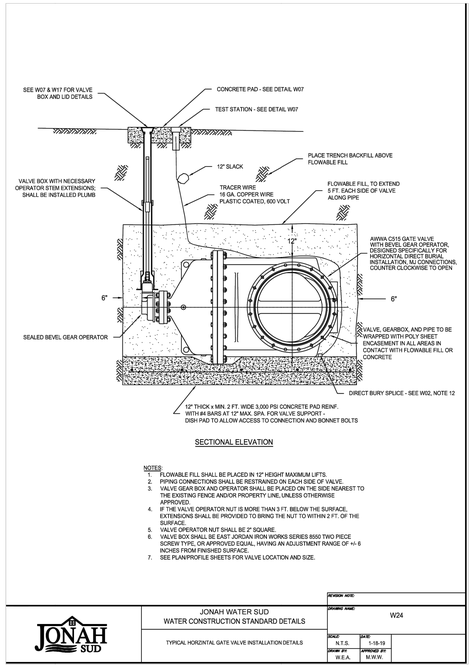

SECTIONAL ELEVATION

NOTES:
1. FLOWABLE FILL SHALL BE PLACED IN 12" HEIGHT MAXIMUM LIFTS.
2. PIPING CONNECTIONS SHALL BE RESTRAINED ON EACH SIDE OF VALVE.
3. VALVE GEAR BOX AND OPERATOR SHALL BE PLACED ON THE SIDE NEAREST TO THE EXISTING FENCE AND/OR PROPERTY LINE, UNLESS OTHERWISE APPROVED.
4. IF THE VALVE OPERATOR NUT IS MORE THAN 3 FT. BELOW THE SURFACE, EXTENSIONS SHALL BE PROVIDED TO BRING THE NUT TO WITHIN 2 FT. OF THE SURFACE.
5. VALVE OPERATOR NUT SHALL BE 2" SQUARE.
6. VALVE BOX SHALL BE EAST JORDAN IRON WORKS SERIES 8550 TWO PIECE SCREW TYPE, OR APPROVED EQUAL, HAVING AN ADJUSTMENT RANGE OF +/- 6 INCHES FROM FINISHED SURFACE.
7. SEE PLAN/PROFILE SHEETS FOR VALVE LOCATION AND SIZE.

JONAH SUD

JONAH WATER SUD
WATER CONSTRUCTION STANDARD DETAILS

TYPICAL HORIZONTAL GATE VALVE INSTALLATION DETAILS

REVISION NOTE:
DRAWING NAME: W24
SCALE: N.T.S. DATE: 1-18-19
DRAW BY: W.E.A. APPROVED BY: M.W.W.

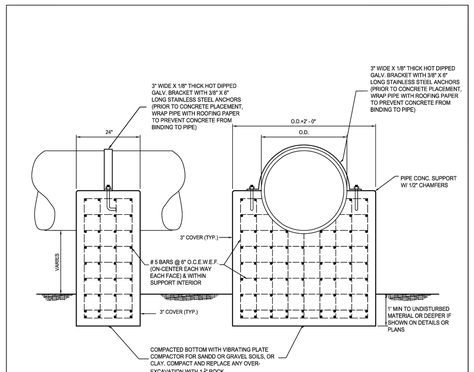

PIPE SUPPORT DETAIL

SCALE: N.T.S.

JONAH SUD

JONAH WATER SUD
WATER CONSTRUCTION STANDARD DETAILS

24" AND LARGER MAIN SIZE; PIPE SUPPORT DETAIL

REVISION NOTE:
DRAWING NAME: W25
SCALE: N.T.S. DATE: 6/17/20
DRAW BY: M.B. APPROVED BY: M.W.W.

NOTE: SAW - CUT ASPHALT & BASE FULL DEPTH PRIOR TO TRENCHING. SAW - CUT ASPHALT SURFACE AGAIN AFTER COMPACTING TRENCH BACKFILL.

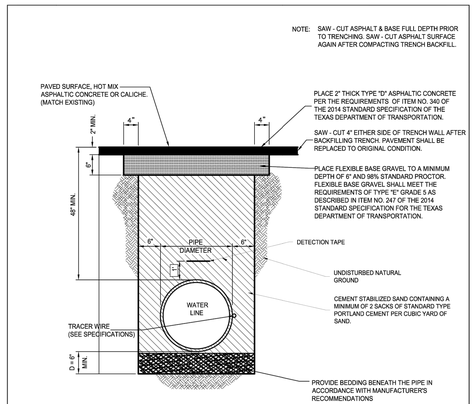

NOTES:
1. CONTINUE BACKFILL, AS SHOWN 2' BEYOND EDGE OF PAVEMENT.
2. TxDOT HIGHWAY AND COUNTY ROADWAY CROSSING REQUIRES STEEL CASING (BORE OR JACK).

JONAH SUD

JONAH WATER SUD
WATER CONSTRUCTION STANDARD DETAILS

24" AND LARGER MAIN SIZE; TRENCH BACKFILL DETAIL UNDER ROADWAY

REVISION NOTE:
DRAWING NAME: W26
SCALE: N.T.S. DATE: 6/17/20
DRAW BY: M.B. APPROVED BY: M.W.W.

NOTE: SAW - CUT ASPHALT & BASE FULL DEPTH PRIOR TO TRENCHING. SAW - CUT ASPHALT SURFACE AGAIN AFTER COMPACTING TRENCH BACKFILL.

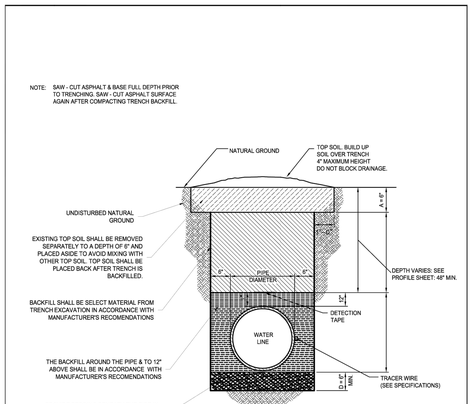

JONAH SUD

JONAH WATER SUD
WATER CONSTRUCTION STANDARD DETAILS

24" AND LARGER MAIN SIZE; STANDARD TRENCH BACKFILL

REVISION NOTE:
DRAWING NAME: W27
SCALE: N.T.S. DATE: 6/17/20
DRAW BY: M.B. APPROVED BY: M.W.W.

8834 N. Capital of Texas Hwy.
Suite 140
Austin, Texas 78759
(512)452-0371
FAX(512)454-9933
TBPELS FIRM #2946

GRAY ENGINEERING

NO.	BY	DATE	REVISION DESCRIPTION

RECORD ONLY

LIDELL WALKER PHASE 2B

WATER DETAILS (4 OF 5)

PROJECT NO: 1725-11738

DESIGNED BY: ARS

DRAWN BY: ARS

CHECKED BY: TMH

NOTICE:
ALTERATION OF A SEALED DRAWING WITHOUT PROPER NOTIFICATION TO THE RESPONSIBLE ENGINEER IS A VIOLATION OF THE TEXAS ENGINEERING PRACTICE ACT.

FOR OFFICIAL USE ONLY

Reviewed for Substantial Conformance by City of Hutto

CITY OF HUTTO

Matt Rector, P.E.
City Engineer
Engineering - City of Hutto

10/01/2024

STATE OF TEXAS
AUSTIN R. SEIFERT
137175
LICENSED
PROFESSIONAL ENGINEER
07/29/2024

SHEET 49 OF 52

LIDELL WALKER PHASE 2B
PROJECT NO: 2157-ENG

H:\PROJECTS\1725 - GRBK EDGEWOOD I,LC\LIDELL WALKER PHASE 2B\CAD\SHEETS\11738-C-DETL.DWG DATE: 7/29/2024 9:41:09 AM BY: ASEIFERT

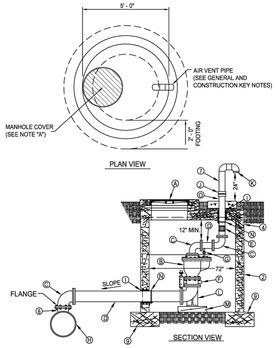

GENERAL NOTES:

1. INSTALLATION SHALL GENERALLY BE FOR A MAIN - LINE 20" AND LARGER, EXCEPT WHERE OTHERWISE SHOWN). INSTALLATION OF OTHER SIZED VALVES IS SIMILAR.
2. PRE - CAST MANHOLE SECTIONS SHALL BE OF REINFORCED CONCRETE CONFORMING TO ASTM C - 478 AND SHALL MEET HS - 20 LOADING. PROVIDE REINFORCEMENT WITHIN 3" @ OPENINGS OR KNOCKOUTS. OPENINGS (UP TO 9") MADE IN FIELD SHALL BE CORE DRILLED.
3. MANUFACTURER TO PROVIDE LIFTERS OF ADEQUATE SIZE AS NEEDED.
4. ECCENTRIC/CONCENTRIC LID (ECCENTRIC SHOWN), 8" THICK.
5. VALVE AND PIPE SIZES AS SPECIFIED.
6. MAIN SIZE X 6" D.I. TEE MJ X MJ X FLANGE.
7. AIR VENT PIPING SIZE AS REQUIRED PER COMBINATION AIR VALVE) TO BE SCHEDULE 40 WELDED STEEL WITH FORGED STEEL WELD FITTINGS. BURIED VENT PIPING SHALL HAVE 2 COATS OF EPOXY POLYAMIDE COATING ABOVE GROUND PIPING TO BE PRIMED AND PAINTED BLUE.
8. AIR VENT PIPING SHALL BE LOCATED CLEAR OF PAVED ROADWAY AND LOCATED TOWARDS THE NEAREST PROPERTY LINE.
9. 12" X 24" FOOTING WITH No. 5 REBAR AT 12" ON CENTER EACH WAY IS REQUIRED.

CONSTRUCTION KEY NOTES:

A. MANHOLE RING AND COVER, SET FRAME AND COVER FLUSH WITH FINISHED GRADE. REFER TO DETAIL "W12"
B. 6" COMBINATION AIR VALVE.
C. 6" FLANGED 90 DEG. BEND.
D. 6" FLANGED SPOOL.
E. 6" FLEXSEISER COUPLING (ROMAC 501 OR APPROVED EQUAL)
F. 6" FLANGED BUTTERFLY VALVE WITH VERTICAL OPERATING NUT.
G. AIR RELEASE PIPING.
H. MAINLINE, SIZE AS SPECIFIED.
I. PIPE WALL SLEEVE (LINK SEAL OR EQUAL).
J. BREAK - A - WAY COUPLING.
K. INSECT SCREEN.
L. 6" FLANGED 90 DEGREE BEND WITH INTEGRATED CAST BASE, BOLTED TO CONCRETE SUPPORT.
M. VALVES INSTALLED ON NATURAL GROUND WITH CONCRETE SUPPORTS AS REQUIRED.
N. ANCHOR PIPING TO VALVE VAULT WITH 3" X 3" X $\frac{1}{2}$" ANGLE & $\frac{3}{8}$" ø STRAP.
O. 4" PLAIN END BY THREADED MALE SCHEDULE 40 STEEL PIPE (GALVANIZED NOT ALLOWED).

JONAH SUD	JONAH WATER SUD WATER CONSTRUCTION STANDARD DETAILS	REVISION NOTE:	
		DRAWING NAME:	W28
	24" AND LARGER MAIN SIZE; AIR/VACUUM RELEASE VALVE ASSEMBLY	SCALE: N.T.S.	DATE: 6/17/20
		DRAWN BY: M.B.	APPROVED BY: M.W.W.

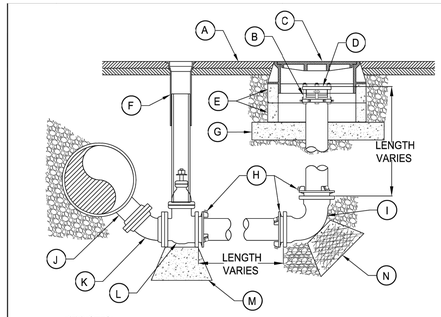

KEYNOTES:

A. FINISHED GRADE. PROVIDE 4" THICK AC PAVEMENT OR CONCRETE PAD CENTERED AROUND VALVE BOXES AND MANHOLES IF OUTSIDE OF PAVED AREAS. PAD SHALL EXTEND A MINIMUM OF 6" BEYOND ALL SIDES OF VALVE BOXES AND MANHOLES.
B. 6" RESTRAINED FLANGED COUPLING ADAPTER.
C. STANDARD MANHOLE FRAME AND LID; REFER TO DETAIL "W12".
D. 6" BLIND FLANGE.
E. 2 EACH - 6" X 24" CONCRETE MANHOLE GRADE RING.
F. VALVE BOX ASSEMBLY; REFER TO "W7" AND "W17"
G. 6" THICK CAST - IN - PLACE CONCRETE BASE.
H. ALL JOINTS IN BLOWOFF ASSEMBLY SHALL BE FULLY RESTRAINED WITH MECHANICAL GRIP FOLLOWERS.
I. 6" 90 DEGREE BEND. MJ X MJ.
J. MAINLINE DIAMTER X 6" TEE ROTATED DOWN 45 DEGREES. MJ X FLANGE.
K. 45 DEGREE BEND. FLANGE X FLANGE.
L. 6" GATE VALVE. FLANGE X MJ.
M. 9" X 9" CONCRETE PIER BLOCK ON UNDISTURBED NATIVE SOIL.
N. 3' X 3' CONCRETE THRUST BLOCK ON UNDISTURBED NATIVE SOIL.

JONAH SUD	JONAH WATER SUD WATER CONSTRUCTION STANDARD DETAILS	REVISION NOTE:	
		DRAWING NAME:	W29
	24" AND LARGER MAIN SIZE; 6" BLOWOFF / FLUSH VALVE	SCALE: N.T.S.	DATE: 6/17/20
		DRAWN BY: M.B.	APPROVED BY: M.W.W.

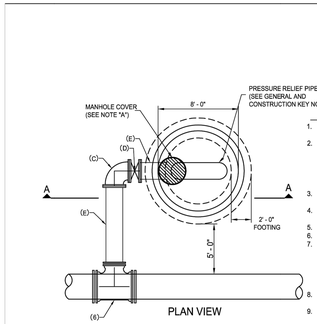

AUTOMATIC PRESSURE RELIEF VALVE
SCALE: N.T.S.

GENERAL NOTES:

1. INSTALLATION SHALL GENERALLY BE FOR A MAIN - LINE 20" AND LARGER.
2. PRE - CAST MANHOLE SECTIONS SHALL BE OF REIUNFORCED CONFORMING TO ASTM C - 478 AND SHALL MEET H2 - 20 LOADING. PROVIDE REINFORCEMENT WITHIN 3" @ OPENINGS OR KNOCKOUTS.
3. MANUFACTURER TO PROVIDE LIFTERS OF ADEQUATE SIZE AS NEEDED.
4. ECCENTRIC/CONCENTRIC LID (ECCENTRIC SHOWN), 8" THICK.
5. VALVE AND PIPE SIZES AS SPECIFIED.
6. 30" X 20" D.I. TEE MJ X MJ X FLANGE.
7. 20 " PIPING DIP TO BE BURIED AND SHALL HAVE 2 COATS OF EPOXY POLYAMIDE COATING. ABOVE GROUND PIPING TO BE PRIMED AND PAINTED BLUE WITH 3-INCH HIGH WHITE LETTERS.
8. PIPING SHALL BE LOCATED CLEAR OF PAVED ROADWAY.
9. 12" X 24" FOOTING WITH No. 5 REBAR AT 12" ON CENTER EACH WAY IS REQUIRED.

CONSTRUCTION KEY NOTES:

A. MANHOLE RING AND COVER, SET FRAME AND COVER FLUSH WITH FINISHED GRADE.
B. FLOWMATIC 20" G01 CLASS 300 FULL PORT GLOBE STYLE PRESSURE RELIEF VALVE.
C. 20" FLANGED 90 DEGREE BEND.
D. 20" FLANGED GATE VALVE WITH VERTICAL OPERATING NUT.
E. MAINLINE, SIZE AS SPECIFIED.
F. PIPE WALL SLEEVE (LINK SEAL OR EQUAL).
G. BREAK - A - WAY COUPLING.
H. INSECT SCREEN.
I. 20" FLANGED 90 DEGREE BEND WITH INTEGRATED CAST BASE, BOLTED TO CONCRETE SUPPORT.
J. VALVES INSTALLED ON NATURAL GROUND WITH CONCRETE SUPPORTS AS REQUIRED.
K. ANCHOR PIPING TO VALVE VAULT WITH 3" X 3" X $\frac{1}{2}$" ANGLE & $\frac{3}{8}$" Ø STRAP.

JONAH SUD	JONAH WATER SUD WATER CONSTRUCTION STANDARD DETAILS	REVISION NOTE:	
		DRAWING NAME:	W31
	24" AND LARGER MAIN SIZE; AUTOMATIC PRESSURE RELIEF VALVE	SCALE: N.T.S.	DATE: 6/17/20
		DRAWN BY: M.B.	APPROVED BY: M.W.W.

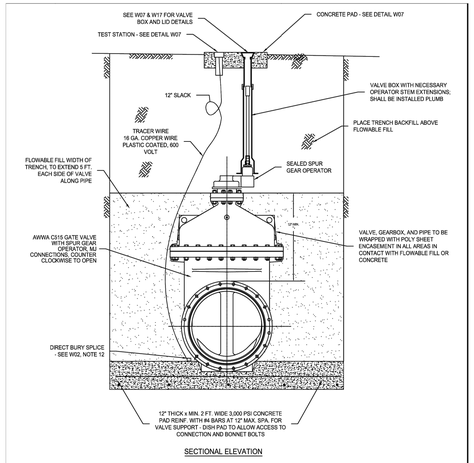

SECTIONAL ELEVATION

NOTES:

1. FLOWABLE FILL SHALL BE PLACED IN 12" HEIGHT MAXIMUM LIFTS.
2. PIPING CONNECTIONS SHALL BE RESTRAINED ON EACH SIDE OF VALVE.
3. VALVE GEAR BOX AND OPERATOR SHALL BE PLACED ON THE SIDE NEAREST TO THE EXISTING FENCE AND/OR PROPERTY LINE, UNLESS OTHERWISE APPROVED.
4. IF THE VALVE OPERATOR NUT IS MORE THAN 3 FT. BELOW THE SURFACE, EXTENSIONS SHALL BE PROVIDED TO BRING THE NUT TO WITHIN 2 FT. OF THE SURFACE.
5. VALVE OPERATOR NUT SHALL BE 2" SQUARE.
6. VALVE BOX SHALL BE EAST JORDAN IRON WORKS SERIES 8550 TWO PIECE SCREW TYPE, OR APPROVED EQUAL, HAVING AN ADJUSTMENT RANGE OF +/- 6 INCHES FROM FINISHED SURFACE.
7. SEE PLAN/PROFILE SHEETS FOR VALVE LOCATION AND SIZE.
8. PRICE FOR VALVE MARKER SHALL BE CONSIDERED SUBSIDIARY TO THE COST OF THE VALVE.

JONAH SUD	JONAH WATER SUD WATER CONSTRUCTION STANDARD DETAILS	REVISION NOTE:	
		DRAWING NAME:	W32
	TYPICAL VERTICAL GATE VALVE INSTALLATION DETAILS (24" AND LARGER)	SCALE: N.T.S.	DATE: 1-8-21
		DRAWN BY: M.W.W.	APPROVED BY: M.W.W.

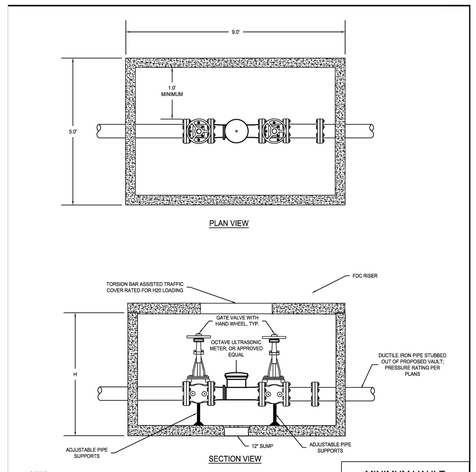

NOTES:

- JOINTS TO THE SEALED WITH RAM-NEK
- CONCRETE SHALL BE 5,000 PSI
- REINFORCING PER ASTM -615 OR A-185

MINIMUM VAULT DIMENSIONS

VALVE SIZE (INCHES)	"H"
4	5'-6"
6	5'-6"
8	6'-6"
10	7'-0"

JONAH SUD	JONAH WATER SUD WATER CONSTRUCTION STANDARD DETAILS	REVISION NOTE:	
		DRAWING NAME:	W33
	WATER METER	SCALE: N.T.S.	DATE: 05-07-2023
		DRAWN BY: J.M.S.	APPROVED BY: M.W.W.

8834 N. Capital of Texas Hwy.
Suite 140
Austin, Texas 78759
(512)452-0371
FAX(512)454-9933
TBPELS FIRM #2946
GRAY ENGINEERING

NO.	BY	DATE	REVISION DESCRIPTION
			RECORD ONLY

LIDELL WALKER PHASE 2B

WATER DETAILS (5 OF 5)

PROJECT NO: 1725-11738

DESIGNED BY: ARS

DRAWN BY: ARS

CHECKED BY: TMH

NOTICE:
ALTERATION OF A SEALED DRAWING WITHOUT PROPER NOTIFICATION TO THE RESPONSIBLE ENGINEER IS A VIOLATION OF THE TEXAS ENGINEERING PRACTICE ACT.

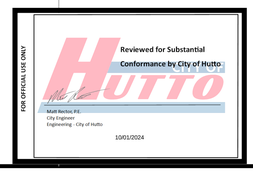

SHEET 50 OF 52

PROJECT NO: 2157-ENG

LIDELL WALKER PHASE 2B

H:\PROJECTS\1725 - GRBK EDGEWOOD LLC\LIDELL WALKER PHASE 2B\CAD\SHEETS\11738-C-DETL.DWG DATE: 7/29/2024 9:41:16 AM BY: ASEIFERT

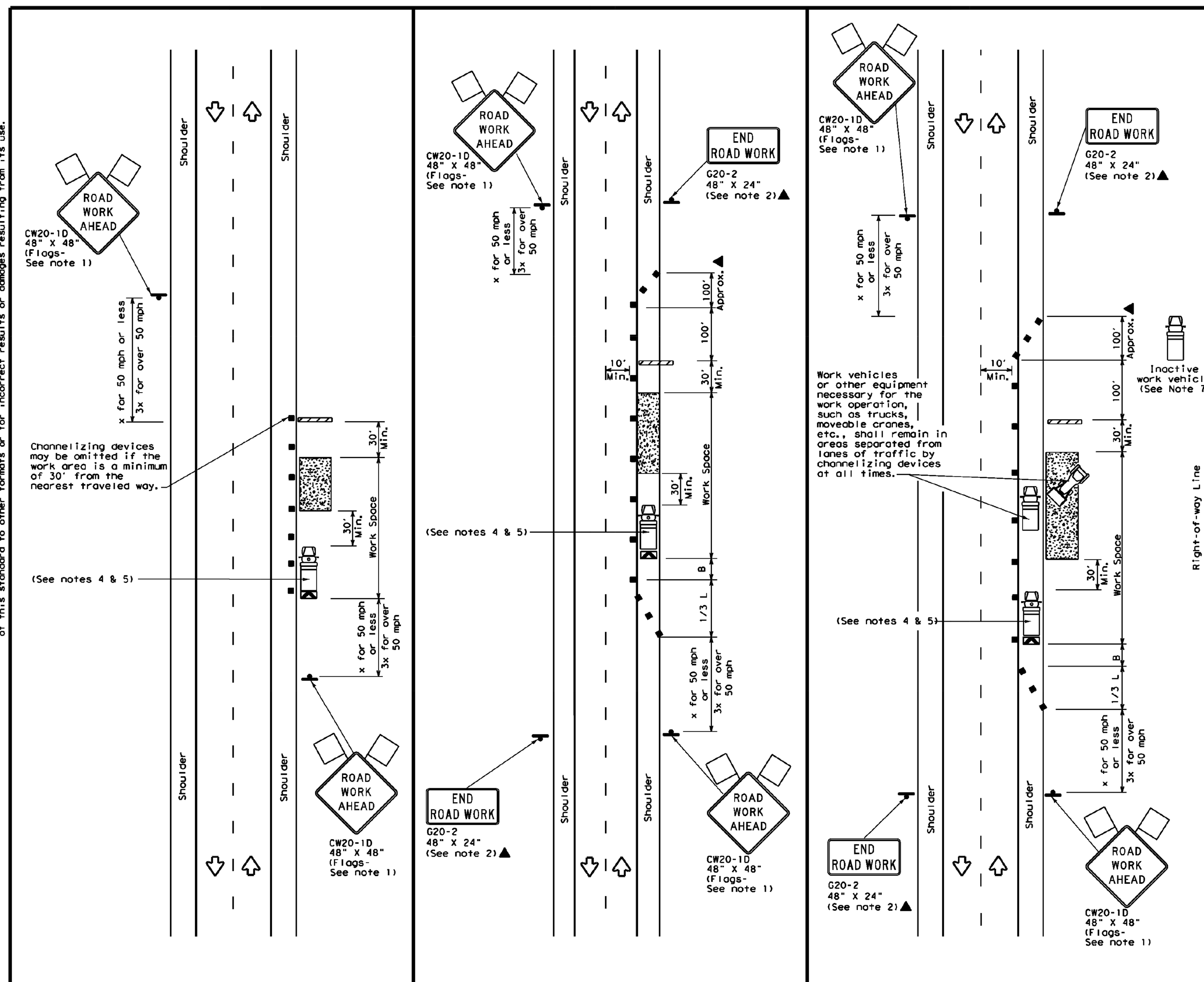

TCP (2-1a)

WORK SPACE NEAR SHOULDER
Conventional Roads

TCP (2-1b)

WORK SPACE ON SHOULDER
Conventional Roads

TCP (2-1c)

WORK VEHICLES ON SHOULDER
Conventional Roads

DISCLAIMER:
The use of this standard is governed by the "Texas Engineering Practice Act". No warranty of any kind is made by TxDOT for any purpose whatsoever. TxDOT assumes no responsibility for the conversion of this standard to other formats or for incorrect results or damages resulting from its use.

DATE:
FILE:

LEGEND

(symbol)	Type 3 Barricade	(symbol)	Channelizing Devices
(symbol)	Heavy Work Vehicle	(symbol)	Truck Mounted Attenuator (TMA)
(symbol)	Trailer Mounted Flashing Arrow Board	(symbol)	Portable Changeable Message Sign (PCMS)
(symbol)	Sign	(symbol)	Traffic Flow
(symbol)	Flag	(symbol)	Flagger

Posted Speed *	Formula	Minimum Desirable Taper Lengths ** 10' Offset	11' Offset	12' Offset	Suggested Maximum Spacing of Channelizing Devices On a Taper	On a Tangent	Minimum Sign Spacing "X" Distance	Suggested Longitudinal Buffer Space "B"
30	$L=\frac{WS^2}{60}$	150'	165'	180'	30'	60'	120'	90'
35		205'	225'	245'	35'	70'	160'	120'
40		265'	295'	320'	40'	80'	240'	155'
45	L=WS	450'	495'	540'	45'	90'	320'	195'
50		500'	550'	600'	50'	100'	400'	240'
55		550'	605'	660'	55'	110'	500'	295'
60		600'	660'	720'	60'	120'	600'	350'
65		650'	715'	780'	65'	130'	700'	410'
70		700'	770'	840'	70'	140'	800'	475'
75		750'	825'	900'	75'	150'	900'	540'

* Conventional Roads Only
** Taper lengths have been rounded off.
L=Length of Taper(FT) W=Width of Offset(FT) S=Posted Speed(MPH)

TYPICAL USAGE

MOBILE	SHORT DURATION	SHORT TERM STATIONARY	INTERMEDIATE TERM STATIONARY	LONG TERM STATIONARY
	✓	✓	✓	✓

GENERAL NOTES

1. Flags attached to signs where shown, are REQUIRED.
2. All traffic control devices illustrated are REQUIRED, except those denoted with the triangle symbol may be omitted when stated in the plans, or for routine maintenance work, when approved by the Engineer.
3. Stockpiled material should be placed a minimum of 30 feet from nearest traveled way.
4. Shadow Vehicle with TMA and high intensity rotating, flashing, oscillating or strobe lights. A Shadow Vehicle with a TMA should be used anytime it can be positioned 30 to 100 feet in advance of the area of crew exposure without adversely affecting the performance or quality of the work. If workers are no longer present but road or work conditions require the traffic control to remain in place, Type 3 Barricades or other channelizing devices may be substituted for the Shadow Vehicle and TMA.
5. Additional Shadow Vehicles with TMAs may be positioned off the paved surface, next to those shown in order to protect a wider work space.
6. See TCP(5-1) for shoulder work on divided highways, expressways and freeways.
7. Inactive work vehicles or other equipment should be parked near the right-of-way line and not parked on the paved shoulder.
8. CW21-5 "SHOULDER WORK" signs may be used in place of CW20-1D "ROAD WORK AHEAD" signs for shoulder work on conventional roadways.

Texas Department of Transportation — Traffic Operations Division Standard

TRAFFIC CONTROL PLAN CONVENTIONAL ROAD SHOULDER WORK

TCP(2-1)-18

FILE: tcp2-1-18.dgn	DN:	CK:	DW:	CK:
©TxDOT December 1985	CONT	SECT	JOB	HIGHWAY
REVISIONS 2-94 4-98 8-95 2-12 1-97 2-18	DIST	COUNTY		SHEET NO.

161

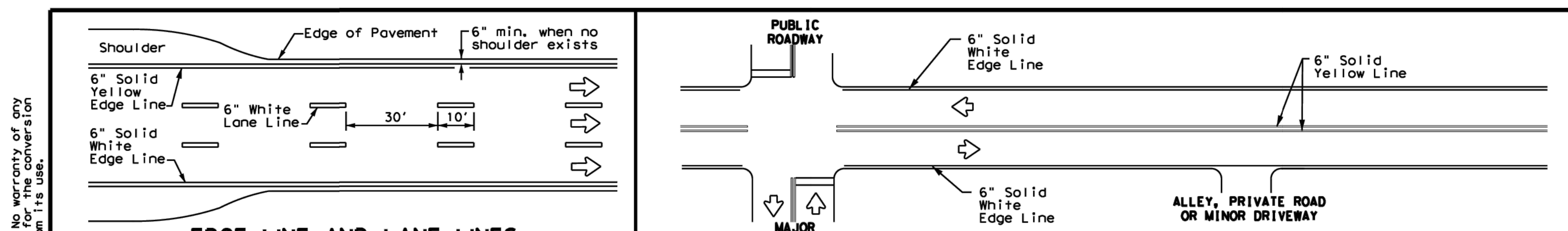

EDGE LINE AND LANE LINES ONE-WAY ROADWAY WITH OR WITHOUT SHOULDERS

TYPICAL TWO-LANE, TWO-WAY PAVEMENT MARKINGS THROUGH INTERSECTIONS

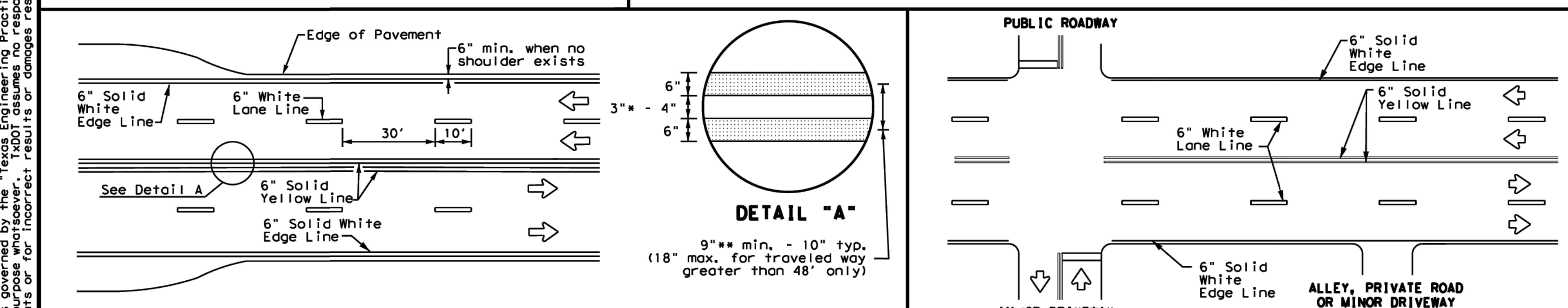

CENTERLINE AND LANE LINES FOUR LANE TWO-WAY ROADWAY WITH OR WITHOUT SHOULDERS

* 2" minimum for restripe projects when approved by the Engineer.
** 8" minimum for restripe projects when approved by the Engineer.

TYPICAL MULTI-LANE, TWO-WAY PAVEMENT MARKINGS THROUGH INTERSECTIONS

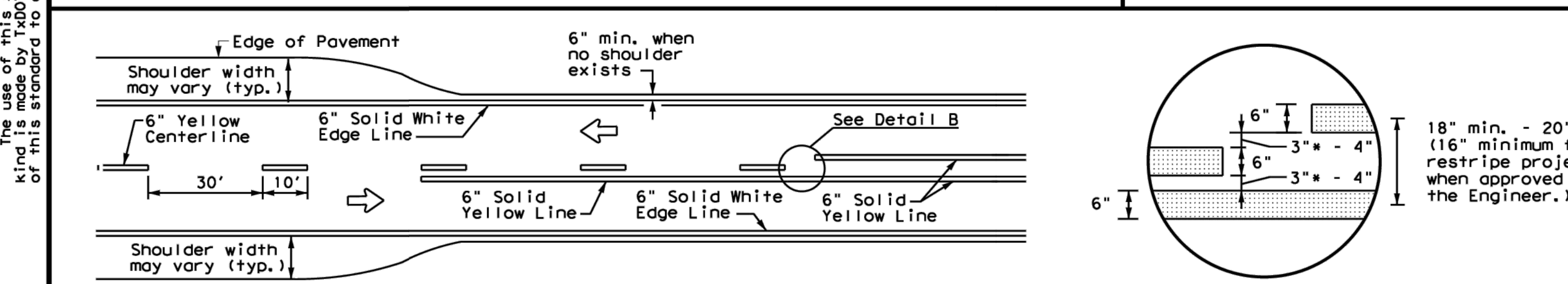

TWO LANE TWO-WAY ROADWAY WITH OR WITHOUT SHOULDERS

* 2" minimum for restripe projects when approved by the Engineer.

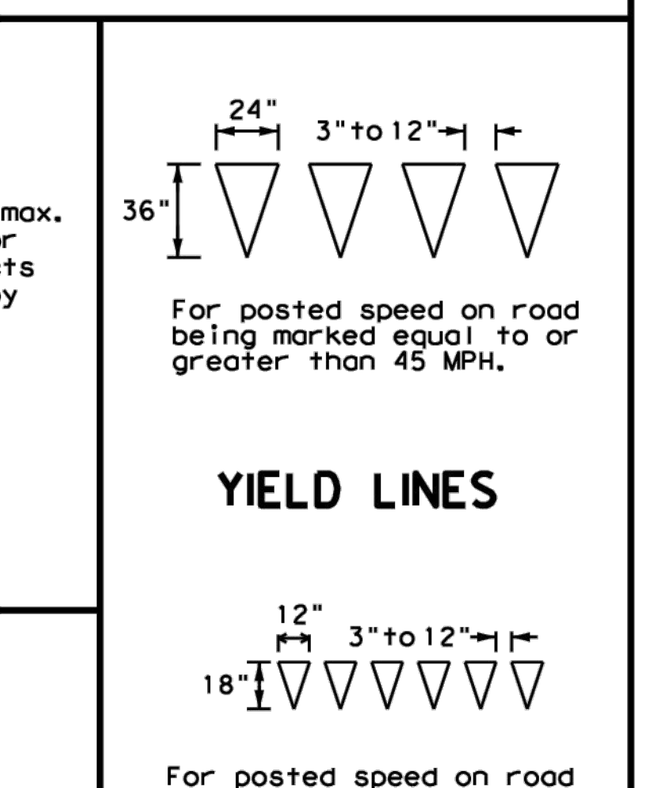

YIELD LINES

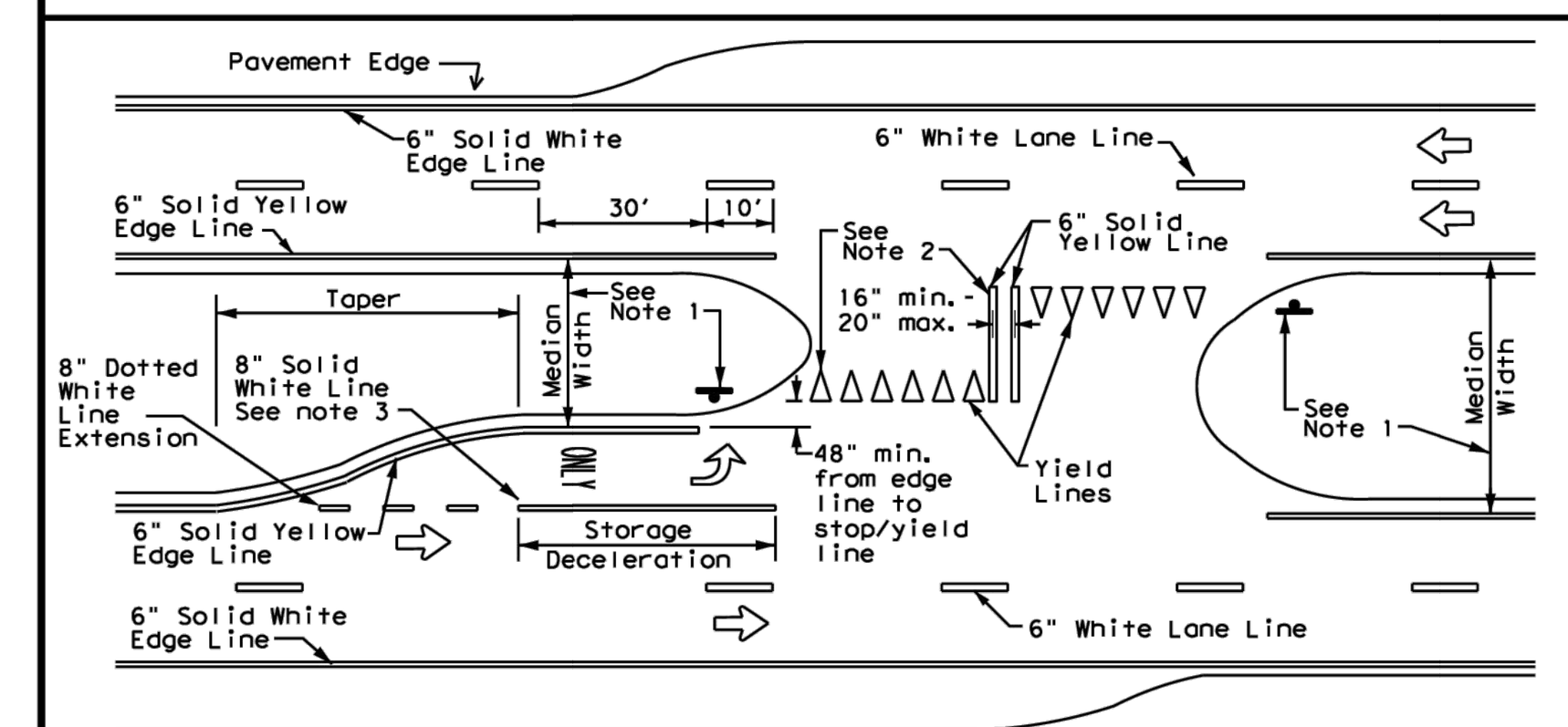

FOUR LANE DIVIDED ROADWAY CROSSOVERS

NOTES

1. Where divided highways are separated by median widths at the median opening itself of 30 feet or more, median openings shall be signed as two separate intersections. Each median opening has two width measurements, with one measurement for each approach. The narrow median width will be the controlling width to determine if signs are required. Yield signs are the typical intersection control. Stop signs and stop bars are optional as determined by the Engineer.
2. Install median striping (double yellow centerlines and stop lines/yield lines) when a 50' or greater median centerline can be placed. Stop lines shall only be used with stop signs. Yield lines shall only be used with yield signs.
3. Length of turn bays, including taper, deceleration, and storage lengths shall be as shown on the plans or as directed by the Engineer.

GENERAL NOTES

1. Edge line striping shall be as shown in the plans or as directed by the Engineer. The edge line should not be placed less than 6 inches from the edge of pavement. This distance may vary due to pavement raveling or other conditions. Edge lines are not required in curb and gutter sections of roadways.
2. The traveled way includes only that portion of the roadway used for vehicular travel. It does not include the parking lanes, sidewalks, berms and shoulders. The traveled ways shall be measured from the center of edge line to the center of edge line of a two lane roadway.

MATERIAL SPECIFICATIONS	
PAVEMENT MARKERS (REFLECTORIZED)	DMS-4200
EPOXY AND ADHESIVES	DMS-6100
BITUMINOUS ADHESIVE FOR PAVEMENT MARKERS	DMS-6130
TRAFFIC PAINT	DMS-8200
HOT APPLIED THERMOPLASTIC	DMS-8220
PERMANENT PREFABRICATED PAVEMENT MARKINGS	DMS-8240

All pavement marking materials shall meet the required Departmental Material Specifications as specified by the plans.

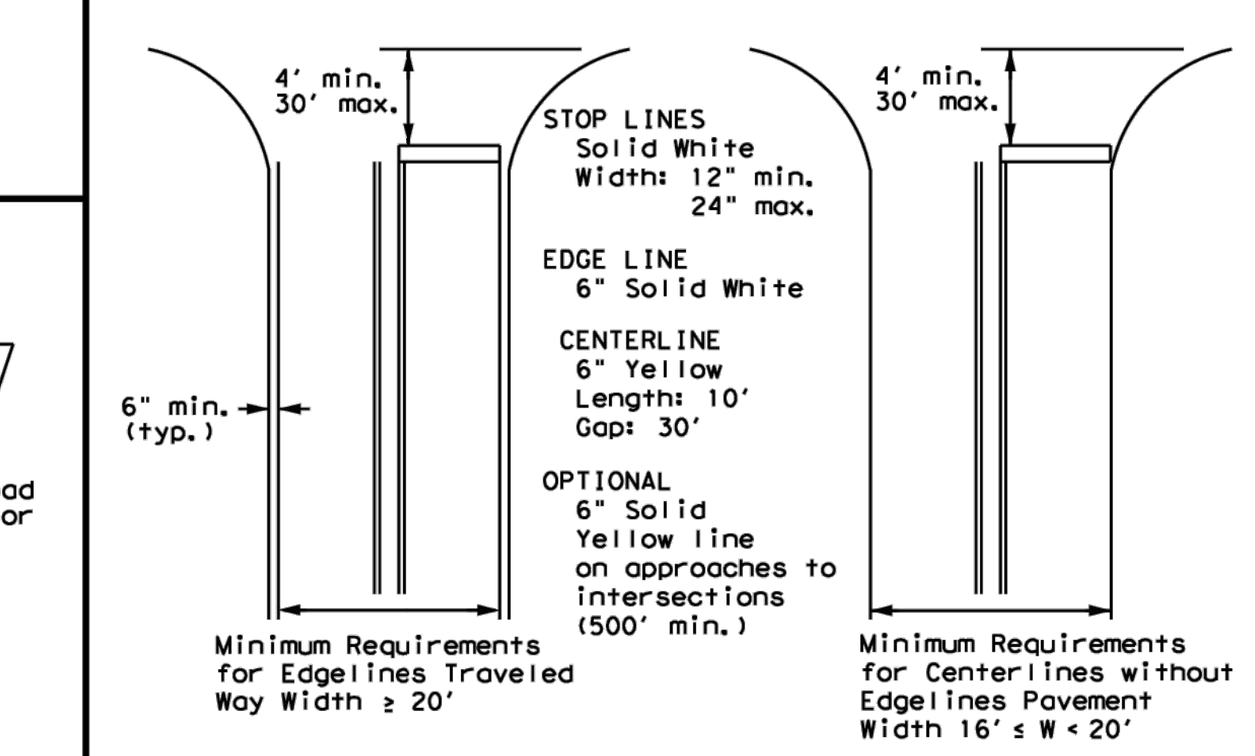

NOTE: Traveled way is exclusive of shoulder widths. Refer to General Note 2 for additional details.

GUIDE FOR PLACEMENT OF STOP LINES, EDGE LINE & CENTERLINE
Based on Traveled Way and Pavement Widths for Undivided Roadways

Texas Department of Transportation — Traffic Safety Division Standard

TYPICAL STANDARD PAVEMENT MARKINGS

PM(1)-22

FILE: pm1-22.dgn	DN:	CK:	DW:	CK:
©TxDOT December 2022	CONT	SECT	JOB	HIGHWAY
REVISIONS 11-78 8-00 6-20 8-95 3-03 12-22 5-00 2-12	DIST	COUNTY		SHEET NO.

22A

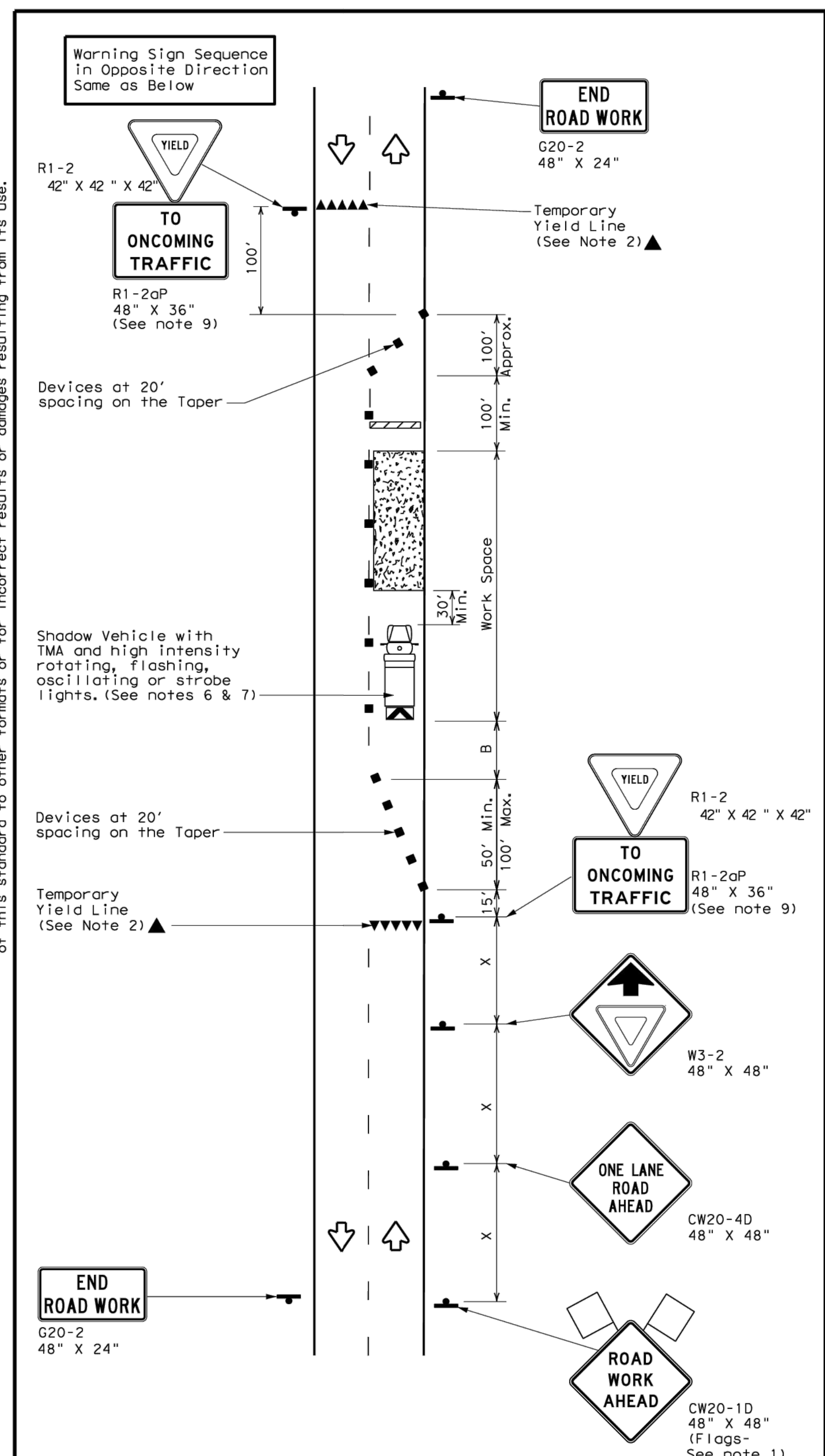

TCP (2-2a)
2-LANE ROADWAY WITHOUT PAVED SHOULDERS
ONE LANE TWO-WAY
CONTROL WITH YIELD SIGNS
(Less than 2000 ADT - See Note 9)

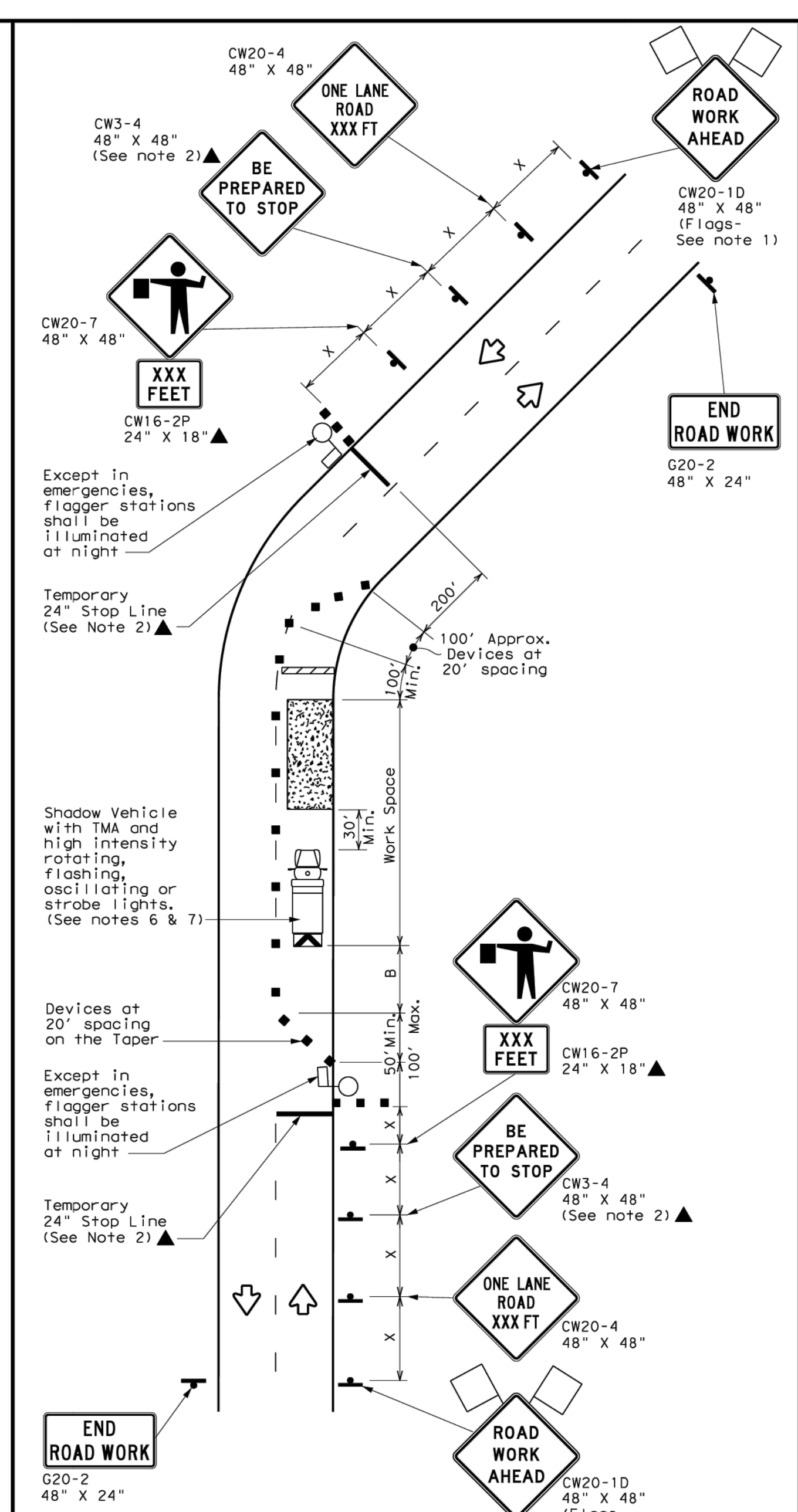

TCP (2-2b)
2-LANE ROADWAY WITHOUT PAVED SHOULDERS
ONE LANE TWO-WAY
CONTROL WITH FLAGGERS

LEGEND

(symbol)	Type 3 Barricade	(symbol)	Channelizing Devices
(symbol)	Heavy Work Vehicle	(symbol)	Truck Mounted Attenuator (TMA)
(symbol)	Trailer Mounted Flashing Arrow Board	(symbol)	Portable Changeable Message Sign (PCMS)
(symbol)	Sign	(symbol)	Traffic Flow
(symbol)	Flag	(symbol)	Flagger

Posted Speed *	Formula	Minimum Desirable Taper Lengths ** 10' Offset	11' Offset	12' Offset	Suggested Maximum Spacing of Channelizing Devices On a Taper	On a Tangent	Minimum Sign Spacing "X" Distance	Suggested Longitudinal Buffer Space "B"	Stopping Sight Distance
30	$L=\frac{WS^2}{60}$	150'	165'	180'	30'	60'	120'	90'	200'
35		205'	225'	245'	35'	70'	160'	120'	250'
40		265'	295'	320'	40'	80'	240'	155'	305'
45	L=WS	450'	495'	540'	45'	90'	320'	195'	360'
50		500'	550'	600'	50'	100'	400'	240'	425'
55		550'	605'	660'	55'	110'	500'	295'	495'
60		600'	660'	720'	60'	120'	600'	350'	570'
65		650'	715'	780'	65'	130'	700'	410'	645'
70		700'	770'	840'	70'	140'	800'	475'	730'
75		750'	825'	900'	75'	150'	900'	540'	820'

* Conventional Roads Only
** Taper lengths have been rounded off.
L=Length of Taper(FT) W=Width of Offset(FT) S=Posted Speed(MPH)

TYPICAL USAGE

MOBILE	SHORT DURATION	SHORT TERM STATIONARY	INTERMEDIATE TERM STATIONARY	LONG TERM STATIONARY
	✓	✓	✓	

GENERAL NOTES

1. Flags attached to signs where shown, are REQUIRED.
2. All traffic control devices illustrated are REQUIRED, except those denoted with the triangle symbol may be omitted when stated elsewhere in the plans, or for routine maintenance work, when approved by the Engineer.
3. The CW3-4 "BE PREPARED TO STOP" sign may be installed after the CW20-4 "ONE LANE ROAD XXX FT" sign, but proper sign spacing shall be maintained.
4. Flaggers should use two-way radios or other methods of communication to control traffic.
5. Length of work space should be based on the ability of flaggers to communicate.
6. A Shadow Vehicle with a TMA should be used anytime it can be positioned 30 to 100 feet in advance of the area of crew exposure without adversely affecting the performance or quality of the work. If workers are no longer present but road or work conditions require the traffic control to remain in place, Type 3 Barricades or other channelizing devices may be substituted for the Shadow Vehicle and TMA.
7. Additional Shadow Vehicles with TMAs may be positioned off the paved surface, next to those shown in order to protect a wider work space.

TCP (2-2a)

8. The R1-2 "YIELD" sign traffic control may be used on projects with approaches that have adequate sight distance. For projects in urban areas, work space should be no longer than one half city block. In rural areas, roadways with less than 2000 ADT, work space should be no longer than 400 feet.
9. The R1-2aP "YIELD TO ONCOMING TRAFFIC" sign shall be placed on a support at a 7 foot minimum mounting height.

TCP (2-2b)

10. Channelizing devices on the center line may be omitted when a pilot car is leading traffic and approved by the Engineer.
11. If the work space is located near a horizontal or vertical curve, the buffer distances should be increased in order to maintain stopping sight distance to the flagger and a queue of stopped vehicles. (See table above).
12. Flaggers should use 24" STOP/SLOW paddles to control traffic. Flags should be limited to emergency situtations.

Texas Department of Transportation — Traffic Operations Division Standard

TRAFFIC CONTROL PLAN ONE-LANE TWO-WAY TRAFFIC CONTROL

TCP(2-2)-18

FILE: tcp2-2-18.dgn	DN:	CK:	DW:	CK:
©TxDOT December 1985	CONT	SECT	JOB	HIGHWAY
REVISIONS 8-95 3-03 1-97 2-12 4-98 2-18	DIST	COUNTY		SHEET NO.

162

FOR OFFICIAL USE ONLY
Reviewed for Substantial Conformance by City of Hutto
CITY OF HUTTO
Matt Rector, P.E.
City Engineer
Engineering - City of Hutto
10/01/2024

8834 N. Capital of Texas Hwy.
Suite 140
Austin, Texas 78759
(512)452-0371
FAX(512)454-9933
TBPELS FIRM #2946

GRAY ENGINEERING

NO.	BY	DATE	REVISION DESCRIPTION

RECORD ONLY

LIDELL WALKER PHASE 2B

TXDOT DETAILS (1 OF 2)

PROJECT NO: 1725-11738
DESIGNED BY: ARS
DRAWN BY: ARS
CHECKED BY: TMH

NOTICE:
ALTERATION OF A SEALED DRAWING WITHOUT PROPER NOTIFICATION TO THE RESPONSIBLE ENGINEER IS A VIOLATION OF THE TEXAS ENGINEERING PRACTICE ACT.

STATE OF TEXAS
AUSTIN R. SEIFERT
137175
LICENSED PROFESSIONAL ENGINEER
07/29/2024

SHEET 51 OF 52

LIDELL WALKER PHASE 2B
PROJECT NO: 2157-ENG

H:\PROJECTS\1725 - GRBK EDGEWOOD LLC\LIDELL WALKER PHASE 2B\CAD\SHEETS\11738-C-DETL.DWG DATE: 7/29/2024 9:41:22 AM BY: ASEIFERT

DISCLAIMER:
The use of this standard is governed by the "Texas Engineering Practice Act". No warranty of any kind is made by TxDOT for any purpose whatsoever. TxDOT assumes no responsibility for the conversion of this standard to other formats or for incorrect results or damages resulting from its use.

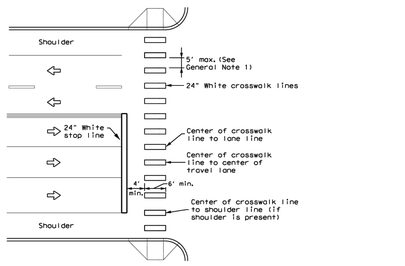

HIGH-VISIBILITY LONGITUDINAL CROSSWALK AT CONTROLLED APPROACH

GENERAL NOTES

1. Longitudinal crosswalk lines should not be placed in the wheel path of vehicles. Center the crosswalk lines on travel lanes, lane lines, and shoulder lines (if present).
2. A minimum 6" clear distance shall be provided to the curb face. If the last crosswalk line falls into this distance it must be omitted.
3. For divided roadways, adjustments in spacing of the crosswalk lines should be made in the median so that the crosswalk lines are maintained in their proper location across the travel portion of the roadway.
4. At skewed crosswalks, the crosswalk lines are to remain parallel to the lane lines.
5. Each crosswalk shall be a minimum of 6' wide.
6. The High-Visibility Longitudinal Crosswalk is the preferred crosswalk pattern on State Highways. Other crosswalk patterns as shown in the "Texas Manual on Uniform Traffic Control Devices" may be used. All crosswalk designs and dimension shall comply with the "Texas Manual on Uniform Traffic Control Devices."
7. Final placement of Stop Bar and Crosswalk shall be approved by the Engineer in the field.

MATERIAL SPECIFICATIONS	
PAVEMENT MARKERS (REFLECTORIZED)	DMS-4200
EPOXY AND ADHESIVES	DMS-6100
BITUMINOUS ADHESIVE FOR PAVEMENT MARKERS	DMS-6130
TRAFFIC PAINT	DMS-8200
HOT APPLIED THERMOPLASTIC	DMS-8220
PERMANENT PREFABRICATED PAVEMENT MARKINGS	DMS-8240

All pavement marking materials shall meet the required Departmental Material Specifications as specified by the plans.

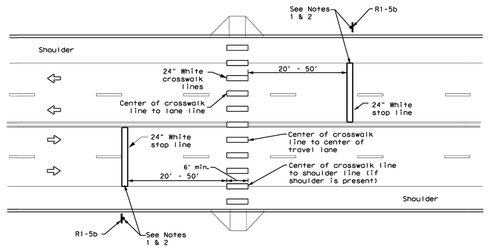

UNSIGNALIZED MIDBLOCK HIGH-VISIBILITY LONGITUDINAL CROSSWALK

NOTES:

1. Use stop bars with Stop Here For Pedestrians (R1-5b) signs at unsignalized midblock cross walks.
2. Use stop bars with STOP HERE ON RED (R10-6 or R10-6a) signs at mid block crosswalks controlled by traffic signals or pedestrian hybrid beacons.

Texas Department of Transportation | Traffic Safety Division Standard

CROSSWALK PAVEMENT MARKINGS

PM(4)-22A

FILE: pm4-22a.dgn	DN:	CK:	DW:	CK:
©TxDOT December 2022	CONT	SECT	JOB	HIGHWAY
REVISIONS	DIST	COUNTY		SHEET NO.
9-20				
4-22				
12-23				

DATE:
FILE:

TABLE OF DIMENSIONS AND REINFORCING STEEL
(Wings for One Structure End)

Dimensions: Maximum Wingwall Height Hw (9)	W	X	Y	Z	Variable Reinforcing: Bars J1 Size	Bars J1 Spa	Bars J2 Size	Bars J2 Spa	Estimated Quantities (3) per Ft of wing length (Two-Wings): Reinf (Lb/Ft)	Conc (CY/Ft)
2'-6"	2'- 5"	1'- 0"	9"	7"	#4	1'-0"	#4	1'-0"	33.73	0.248
3'-0"	2'- 5"	1'- 0"	9"	7"	#4	1'-0"	#4	1'-0"	37.07	0.261
3'-6"	2'- 5"	1'- 0"	9"	7"	#4	1'-0"	#4	1'-0"	37.74	0.273
4'-0"	2'- 5"	1'- 0"	9"	7"	#4	1'-0"	#4	1'-0"	38.41	0.285
4'-6"	3'- 2"	1'- 6"	1'- 0"	7"	#4	1'-0"	#4	1'-0"	41.75	0.330
5'-0"	3'- 2"	1'- 6"	1'- 0"	7"	#4	1'-0"	#4	1'-0"	45.09	0.343
5'-6"	3'- 2"	1'- 6"	1'- 0"	7"	#4	1'-0"	#4	1'-0"	45.75	0.355
6'-0"	3'- 2"	1'- 6"	1'- 0"	7"	#4	1'-0"	#4	1'-0"	46.42	0.367
7'-0"	3'- 8"	1'- 9"	1'- 3"	7"	#4	1'-0"	#4	1'-0"	52.77	0.414
8'-0"	4'- 2"	2'- 0"	1'- 6"	8"	#5	1'-0"	#4	1'-0"	60.19	0.486
9'-0"	4'- 8"	2'- 3"	1'- 9"	8"	#4	6"	#4	6"	81.49	0.535
10'-0"	5'- 2"	2'- 6"	2'- 0"	8"	#5	6"	#4	6"	97.25	0.584
11'-0"	5'- 8"	2'- 9"	2'- 3"	8"	#6	6"	#5	6"	133.65	0.634
12'-0"	6'- 2"	3'- 0"	2'- 6"	9"	#7	6"	#5	6"	162.29	0.721

TABLE OF WINGWALL REINFORCING (Two-Wings)

Bar	Size	No.	Spa
D	#3	~	1'-0"
E	#4	~	1'-0"
F	#4	~	1'-0"
G	#6	4	~
M	#4	4	~
P	#4	~	1'-0"
R	#5	6	~
V	#4	~	1'-0"

TABLE OF ESTIMATED CULVERT TOEWALL QUANTITIES

Bar	Size	No.	Spa
L	#4	~	1'-6"
Q	#4	1	~
Reinf (Lb/Ft)			2.45
Conc (CY/Ft)			0.037

TABLE OF ESTIMATED ANCHOR TOEWALL QUANTITIES

Bar	Size	No.	Spa
K	#4	~	1'-0"
N	#5	6	~
OL	#4	6	~
Reinf (Lb/Ft)			9.82
Conc (CY/Ft)			0.074

(1) Extend Bars P 3'-0" Min into bottom slab of box culvert.

(2) Adjust to fit as necessary to maintain 1 1#2" clear cover and 4" Min between bars.

(3) Quantities shown are based on an average wing height for two wings (one structure end). To determine total quantities for two wings multiply the tabulated values by Lw.

(4) Recommended values of slope are: 3:1, 4:1, and 6:1. Provide 3:1 or flatter slope.

(5) When shown elsewhere on the plans, construct 5' deep concrete riprap. Payment for riprap is as required by Item 432, "Riprap." Unless otherwise shown on the plans or directed by the Engineer, extend concrete riprap over formed joints oriented in the direction of flow and over transverse expansion joints in riprap, at intervals of approximately 20'. When extruded riprap is provided, the culvert toewall shown in SECTION B-B is not required.

(6) At Contractor's option, end the culvert toewall flush with wingwall toewall. Adjust reinforcing as needed.

(7) 3' Min to 5'-0" Max. Estimated curb heights are shown elsewhere in the plans. For structures without railing and curbs taller than T'-0", refer to Extended Curb Details (ECD) standard sheet.

(8) For vehicle safety, reduce curbs height, if necessary, to provide a maximum 3" projection above finished grade. No changes will be made in quantities and no additional compensation will be allowed for this work.

(9) See Table of Maximum Wing Heights for various slopes. Height is limited based on a 33'-6" maximum safety pipe runner length.

TABLE OF MAXIMUM WING HEIGHTS (9)

Side Slope	Hw Max
3:1	11'- 5"
4:1	8'-10"
6:1	6'- 1"

WING DIMENSION CALCULATIONS:

Hw = H + T + C - 0.250' (9)
Lw = (Hw - 0.333') (SL)

For cast-in-place culverts:
Ltw = (N) (SL) + (N + 1) (U)
For precast culverts:
Ltw = (N) (2U + S) + (N - 1) (0.500')

Lc = (Ltw) - (2U)
Atw = Lc
Total Wingwall Area (two wings ~ SF)
= (Hw + 0.333') (Lw)

Hw = Height of wingwall (feet)
SL = Side slope ratio (horizontal : 1 vertical)
Lw = Length of wingwall (feet)
Ltw = Culvert toewall length (feet)
Lc = Culvert curb between wings (feet)
Atw = Anchor toewall length (feet)
N = Number of culvert spans

See applicable box culvert standard for H, S, T, and U values. See Table of Maximum Wall Heights for limits on Hw.

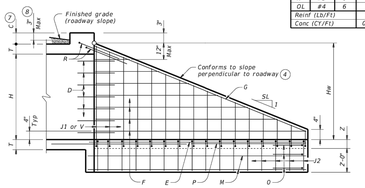

INSIDE ELEVATION OF WINGWALL
(Showing reinforcing. Culvert and culvert toewall reinforcing not shown for clarity.)

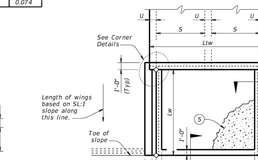

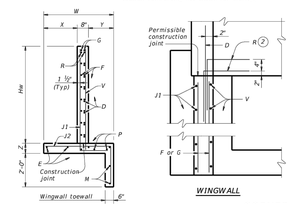

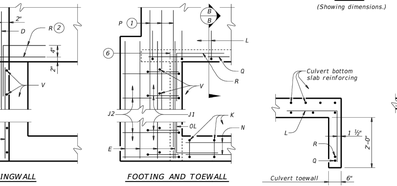

TABLE OF MAXIMUM WALL HEIGHTS

Hw	T
3'-0" to 5'-0"	1'-0"
5'-6" to 7'-0"	1'-3"
7'-6" to 9'-0"	1'-6"
9'-6" to 11'-0"	1'-9"
11'-6" to 12'-0"	2'-0"

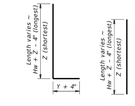

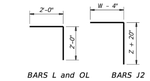

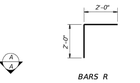

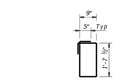

MATERIAL NOTES:

Provide Grade 60 reinforcing steel.
Provide galvanized reinforcing steel if required elsewhere in the plans.
Synthetic fibers listed on the "Fibers for Concrete" Material Producer List (MPL) may be used in lieu of steel reinforcing in riprap concrete unless noted otherwise.
Provide Class "C" concrete (f'c = 3,600 psi).
Adjust reinforcing as necessary to provide a minimum clear cover of 1 ½".
Provide pipe runners and anchor pipes meeting the requirements of ASTM A53 (Type E or S, Gr B), ASTM A500 Gr B, or API 5L X52.
Provide ASTM A307 bolts and nuts.
Provide ASTM A36 steel plate.
Galvanize all steel components, except reinforcing unless required elsewhere in the plans, after fabrication.
Repair galvanizing damaged during transport or construction in accordance with the Item 445, "Galvanizing."
For optional adhesive anchors, install epoxy adhesive anchorages in accordance with the manufacturer's instructions including hole size, drilling equipment and method, hole cleaning equipment and method, mixing and dispensing adhesive, and anchor insertion. Do not alter the manufacturer's mixing nozzle or dispenser. Provide anchorage rods that are clean and free of grease, oil, or any other foreign material. Demonstrate hole cleaning method to the Engineer for approval and continue the approved process for all anchorage locations. Test adhesive anchors in accordance with Item 450.3.3, "Tests." Test 3 anchors per 100 anchors installed.

GENERAL NOTES:

Designed according to AASHTO LRFD Bridge Design Specifications.
The safety end treatments shown herein are intended for use in those installations where out of control vehicles are likely to traverse the openings approximately perpendicular to the pipe runners.
Pipe runners are designed for a traversing load of 1,800 pounds at yield as recommended by Research Report 280-1, "Safety Treatment of Roadside Cross-Drainage Structures", Texas Transportation Institute, March 1981.
When structure is founded on solid rock, depth of toewalls for culverts and wingwalls may be reduced or eliminated as directed by the Engineer.
All bolts, nuts, washers, brackets, angles, and pipe runners are considered parts of the safety end treatment for payment.
The quantities for pipe runners, reinforcing steel, and concrete, resulting from the formulas given herein are for Contractor's information only.
See Box Culvert Supplement (BCS) standard sheet for additional dimensions and information.

Cover dimensions are clear dimensions, unless noted otherwise. Reinforcing dimensions are out-to-out of bars.

SHEET 1 OF 3

Texas Department of Transportation | Bridge Division Standard

SAFETY END TREATMENT WITH STRAIGHT WINGS
FOR 0° SKEW BOX CULVERTS
TYPE I ~ CROSS DRAINAGE

SETB-SW-0

FILE: CD-SETB-SW0-20.dgn	DN: GAF	CK: CAF	DW: TxDOT	CK: TxDOT
©TxDOT February 2020	CONT	SECT	JOB	HIGHWAY
REVISIONS	DIST	COUNTY		SHEET NO.

DATE:
FILE:

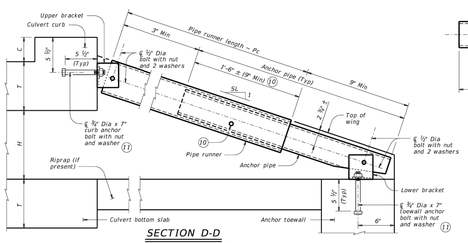

SECTION D-D
(Showing curb pipe runner.)

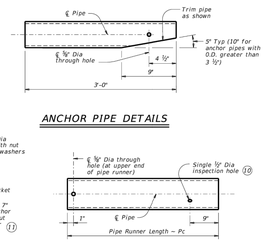

ANCHOR PIPE DETAILS

PIPE RUNNER DETAILS

MAXIMUM PIPE RUNNER LENGTHS AND REQUIRED PIPE RUNNER AND ANCHOR PIPE SIZES						
Maximum Pipe Runner Length (Ft)	Required Pipe Runner Size: Pipe Size	Pipe O.D.	Pipe I.D.	Required Anchor Pipe Size: Pipe Size	Pipe O.D.	Pipe I.D.
9'-4"	3" STD	3.500"	3.068"	2" STD	2.375"	2.067"
19'-0"	4" STD	4.500"	4.026"	3" STD	3.500"	3.068"
33'-6"	5" STD	5.563"	5.047"	4" STD	4.500"	4.026"

(10) After installation of pipe runner, use the ½" inspection hole to ensure that the lap of the anchor pipe with the pipe runner is adequate.

(11) At Contractor's option, an adhesive anchor may be used. Provide ¾" Dia adhesive anchors that meet the requirements of ASTM A307, Gr A fully threaded rods. Embed threaded rods into curb, wingwalls, and toewall using a Type III, Class C, D, E, or F anchor adhesive. Minimum embedment depth is 5 ½". Provide anchor adhesive able to achieve a basic bond strength in tension, Nba, of 20 kips. Submit signed and sealed calculations or the manufacturer's published literature showing the proposed anchor adhesive's ability to develop this load to the Engineer for approval prior to use.

PIPE RUNNER DIMENSION CALCULATIONS:

Pc = (Lw) (K) – (1.688)

Pc = Pipe runner length (feet)

K = Constant values for use in formulas

Slope SL:1		
3:1	~	1.054
4:1	~	1.031
6:1	~	1.014

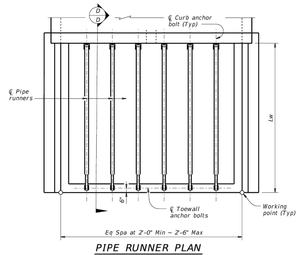

PIPE RUNNER PLAN

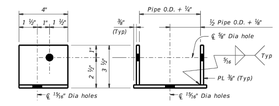

Note: Upper and lower brackets match the required pipe diameters as shown in the table.

UPPER AND LOWER BRACKET DETAILS

SHEET 2 OF 3

Texas Department of Transportation | Bridge Division Standard

SAFETY END TREATMENT WITH STRAIGHT WINGS
FOR 0° SKEW BOX CULVERTS
TYPE I ~ CROSS DRAINAGE

SETB-SW-0

FILE: CD-SETB-SW0-20.dgn	DN: GAF	CK: CAF	DW: TxDOT	CK: TxDOT
©TxDOT February 2020	CONT	SECT	JOB	HIGHWAY
REVISIONS	DIST	COUNTY		SHEET NO.

DATE:
FILE:

Culvert Station and/or Creek name followed by applicable end (LT, Rt or Both) (12)	Lc (Ft)	L2: No. Spa	L2: Spa at (Ft)	L2: Overall Length (Ft)	Pipe Runner (Pc): No.	Pipe Runner (Pc): Length (Ft)	Pipe Runner (Pc): Size (2"-6" or 5")	Pipe Runner (Pc): Total (12) Length (Ft)	3'-0" Anchor Pipe: Size (2"-3" or 4")	3'-0" Anchor Pipe: Total (12) Length (Ft)

(12) Quantities shown are for one structure end if Lt or Rt. Quantities shown are for two structure ends if Both.

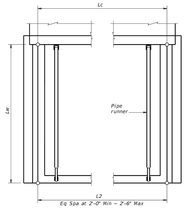

PIPE RUNNER LAYOUT

SPECIAL NOTE:

This tabular sheet is to be filled out by the culvert specifier and provides information for the construction details and quantities of pipe runners.

An Excel 2010 spreadsheet to assist in completing this table can be downloaded from the Bridge Standards (English) web page on the TxDOT web site. The completed sheet must be signed, sealed, and dated by a licensed Professional Engineer.

Note that the tabular quantities are given for Contractor information only. It is likely that these quantities will change due to field conditions. Therefore, all dimensions must be verified by the Contractor in the Field prior to fabrication of the safety end treatment components.

SHEET 3 OF 3

Texas Department of Transportation | Bridge Division Standard

SAFETY END TREATMENT WITH STRAIGHT WINGS
FOR 0° SKEW BOX CULVERTS
TYPE I ~ CROSS DRAINAGE

SETB-SW-0

FILE: CD-SETB-SW0-20.dgn	DN: TxDOT	CK: TxDOT	DW: TxDOT	CK: TxDOT
©TxDOT February 2020	CONT	SECT	JOB	HIGHWAY
REVISIONS	DIST	COUNTY		SHEET NO.

DATE:
FILE:

FOR EXPIRATION DATE

Reviewed for Substantial Conformance by City of Hutto

Matt Mackey, P.E.
City Engineer
Engineering - City of Hutto

09/29/2025

8834 N. Capital of Texas Hwy.
Suite 140
Austin, Texas 78759
(512)452-0371
FAX(512)454-9933
TBPELS FIRM #2946

GRAY ENGINEERING

NO.	BY	DATE	REVISION DESCRIPTION
1		07/09/25	DETAIL ADDED

RECORD ONLY

LIDELL WALKER PHASE 2B

TXDOT DETAILS (2 OF 2)

PROJECT NO: 1725-11738

DESIGNED BY: ARS

DRAWN BY: ARS

CHECKED BY: TMH

NOTICE:
ALTERATION OF A SEALED DRAWING WITHOUT PROPER NOTIFICATION TO THE RESPONSIBLE ENGINEER IS A VIOLATION OF THE TEXAS ENGINEERING PRACTICE ACT.

STATE OF TEXAS
AUSTIN R. SEIFERT
137175
LICENSED PROFESSIONAL ENGINEER
07/23/2025

SHEET 52 OF 52

LIDELL WALKER PHASE 2B
PROJECT NO: 2157-ENG

H:\PROJECTS\1725 - GRBK EDGEWOOD LLC\LIDELL WALKER PHASE 2B\CAD\SHEETS\11738-C-DETL.DWG DATE: 7/23/2025 1:23:25 PM BY: ASEIFERT

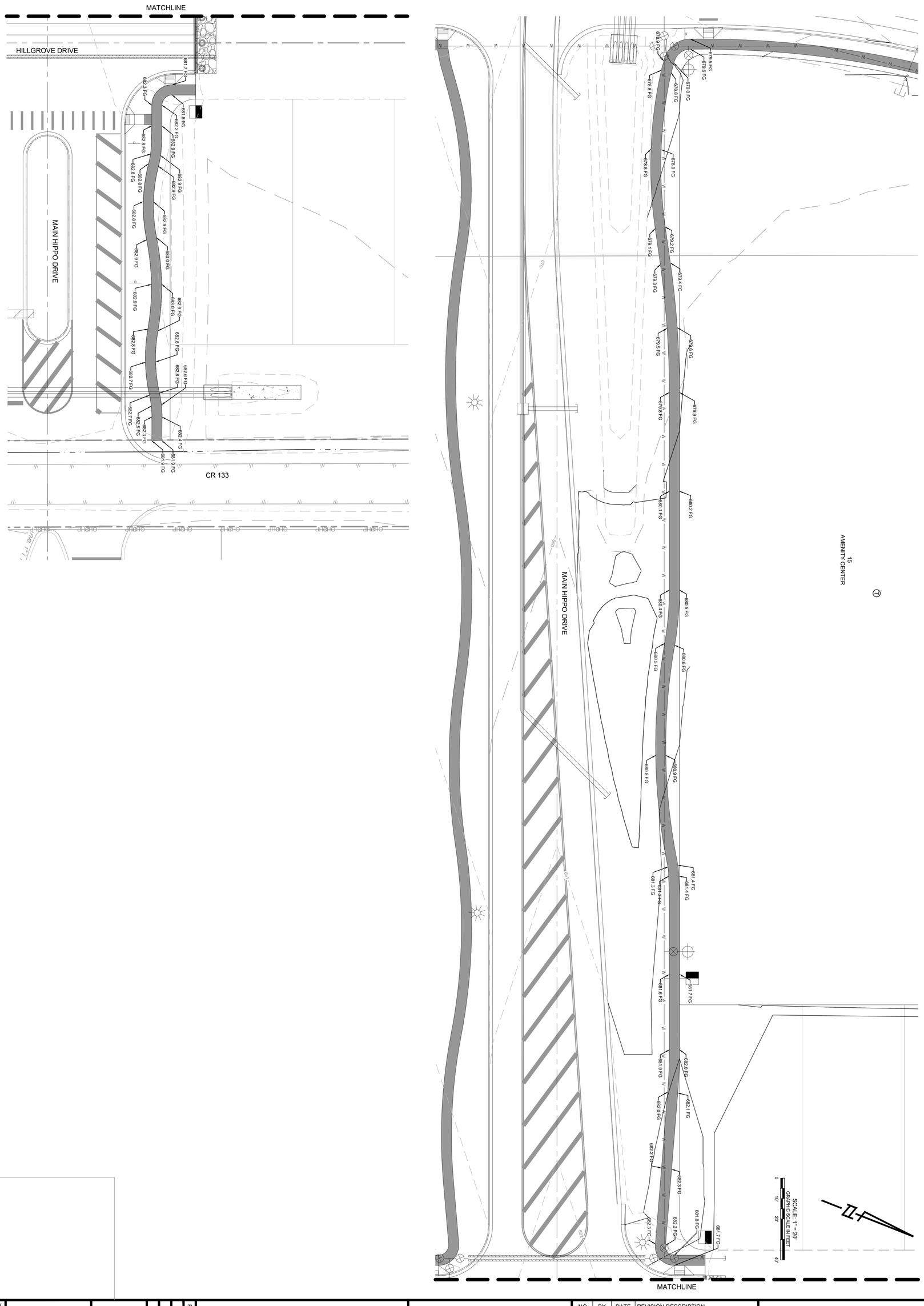

SHEET 7 OF 52	SIDEWALK EXHIBIT	LIDELL WALKER PHASE 2B	
DRAWN BY: ARS DESIGNED BY: ARS CHECKED BY: TMH PROJECT NO: 1725-11738			

NOTICE
ALTERATION OF A SURVEY MAP OR PLAT BY ANY PERSON OTHER THAN THE RESPONSIBLE ENGINEER, WITHOUT PROPER NOTIFICATION, IS A VIOLATION OF THE ENGINEERING PRACTICE ACT.

NO.	BY	DATE	REVISION DESCRIPTION

GRAY ENGINEERING
8834 N. Capital of Texas Hwy.
Suite 140
Austin, Texas 78759
(512)452-0371
FAX(512)454-9933
TBPELS FIRM #2946

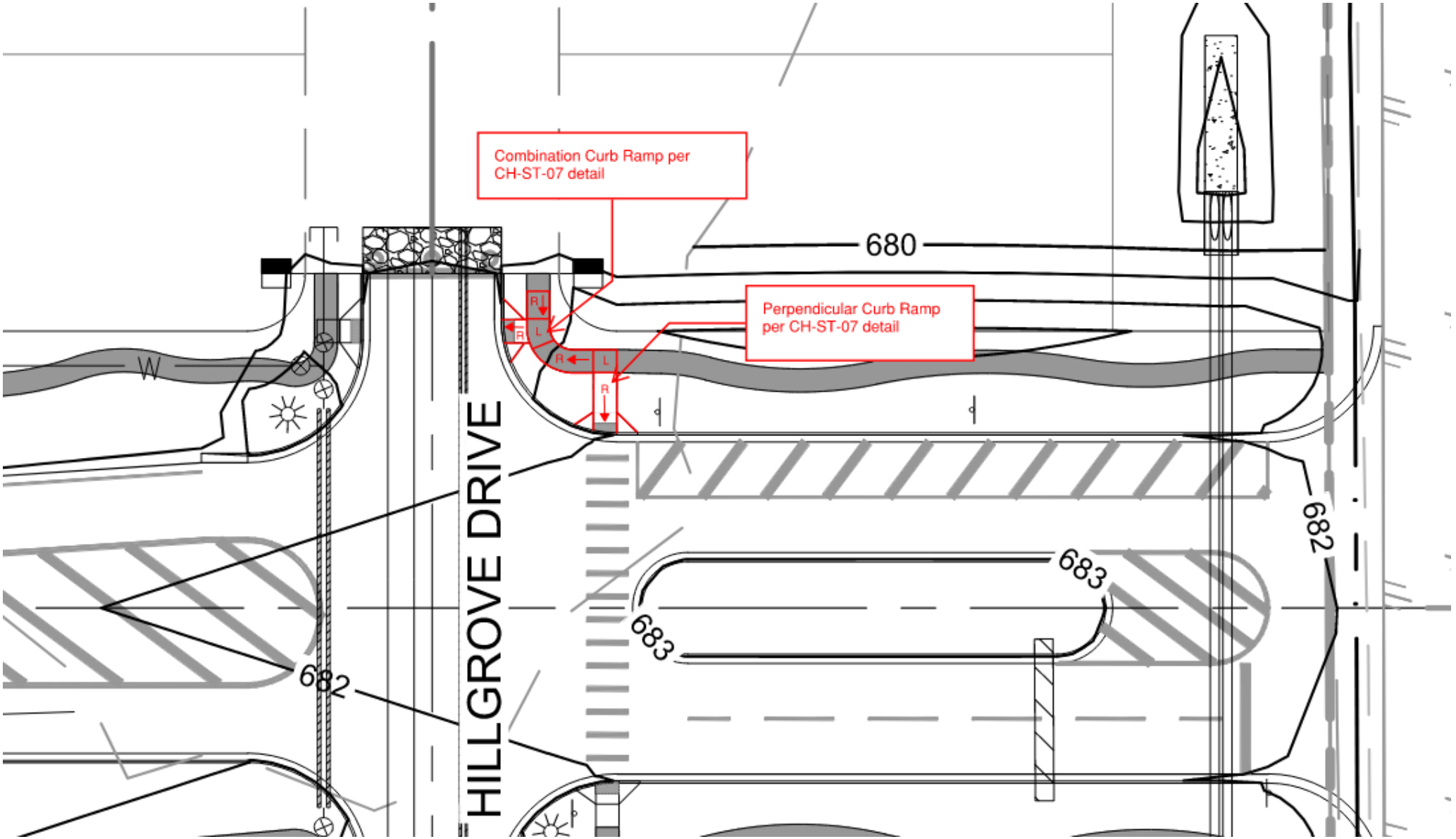
Combination Curb Ramp per CH-ST-07 detail
Perpendicular Curb Ramp per CH-ST-07 detail
680
682
683
683
682
HILLGROVE DRIVE
W
R
L
R
L
R

PROJECT CONSTRUCTION SUMMARY

PROJECT NAME: Lidell Walker Phase 2B

FINAL ACCEPTANCE DATE: _____

INSPECTOR: Carson Monroe

CONTRACTOR: Liberty Civil Construction, LLC

Maintained By:	
COH	Other
Boxes checked by COH	

CONSTRUCTION COSTS

STREET IMPROVEMENT COST: $869,343.48

SIDEWALK IMPROVEMENT COST: $116,713.32

SIDEWALK RAMP IMPROVEMENT COST: $22,982.04

BRIDGE IMPROVEMENT COST: N/A

POND(S) COST: N/A

DRAINAGE IMPROVEMENT COST: $1,043,658.32

WATER IMPROVEMENT COST: N/A

WASTEWATER IMPROVEMENT COST: $246,191.13

RESTORATION COST: $178,812.09

TOTAL IMPROVEMENT COST: $2,477,700.38

PREPARED BY (DESIGN ENGINEER): _____

CHECKED BY (CITY INSPECTOR): Carson Monroe

Digitally signed by Carson Monroe
DN: C=US, E=Carson.Monroe@huttotx.gov, O=City of Hutto, OU=Construction Inspection, CN=Carson Monroe
Date: 2026.05.13 08:08:39-05'00'

STATE OF TEXAS
SCOTT A. SWIDERSKI
94338
LICENSED
PROFESSIONAL ENGINEER
4-14-26

CONSTRUCTION SUMMARY FOR STREETS & SIDEWALKS

STREET PAVING							
STREET NAME	Address from	Address to	Pavement Design (Thickness) Asphalt / Base	Pavement Width (FT) (foc-foc)	L (FT)	PRIVATE	ETJ
Main Hippo Drive (Station 1+00 to 8+93.80)	N/A	N/A	6" / 21"	31.5'	794'	N/A	N/A
Main Hippo Drive (Station 8+93.80 to 14+14.68)	N/A	N/A	6" / 21"	31.5' to varies	521'	N/A	N/A
Main Hippo Drive (Station 14+14.68 to 16+70.15)	N/A	N/A	6" / 21"	27.5'	256'	N/A	N/A
Seabright Avenue (Street B)	N/A	N/A	2" / 14"	44'	314'	N/A	N/A
Hillgrove Drive (Street D)	N/A	N/A	2" / 9"	30'	145'	N/A	N/A

SIDEWALKS / SIDEWALK RAMPS						
STREET NAME	Address from	Address to	W (FT)	L (FT)	SIDES [1]	CURB RAMP [2]
Main Hippo Dr	N/A	N/A	5'	2,581'	N/A	2
Seabright Avenue (Street B)	N/A	N/A	5'	350'	N/A	4
Hillgrove Drive (Street D)	N/A	N/A	5'	60'	N/A	6

1 – Designates location of existing sidewalk (E, W, S, N, SE, SW, NE, NW of designated street)
2 – Number of Ramps

CONSTRUCTION SUMMARY FOR BRIDGES

BRIDGES / BRIDGE CLASS CULVERTS / DRAINAGE CULVERTS ACROSS ROW								
STREET NAME AND ADDRESS OR LOCATION	FEATURE CROSSED [1]	TYPE [2]	DESCRIPTION [3]	DECK		COST	PRIVATE	ETJ
				W (FT) [4]	L (FT) [5]			
N/A								

1 – Feature Crossed: Creek name if major creek or branch, or roadway name if overpass.

2 – Type: B – Bridge, C - Culvert, P – Pipe. All crossings 20’ and wider including multiple box culverts totaling 20’ or wider shall be classified as a B – Bridge. Culverts are precast of cast-in-place box culverts. Pipes are smaller drainage pipe crossings with or without headwalls.

3 – Description: i.e. 2 spans (Bridge), 2 – 5 X 7’ (Culverts), 2 – 24” RCP (Pipes).

4 – Deck Width: Use “footprint” of culvert/pipes for width on buried culvert/pipes; include full “out to out” dimension including sidewalks/railings for width of standard bridges.

5 – Deck Length: Measured along the centerline of the roadway

CONSTRUCTION SUMMARY FOR PONDS

PONDS						
POND TYPE [1]	LOCATION (ADDRESS OR LOT / BLOCK #)	SIZE (SY) [2]	DRAINAGE AREA (ACRES)	PRIVATE [3]	ETJ	COST
N/A						

1 – BD = Bio–Detention
D = Detention Only
DSF = Detention / Sedimentation / Filtration
F = Filtration Only
S = Sedimentation Only
SF = Sedimentation / Filtration
SFI = Sedimentation / Filtration / Infiltration
SI = Sedimentation / Irrigation
WP = Wet Pond

2 – Approximate boundary area

3 – Provide copy of recorded agreement for privately maintained ponds

CONSTRUCTION SUMMARY FOR DRAINAGE

STORM DRAIN			MANHOLES			INLETS		
SIZE (IN)	MATERIAL TYPE	L (FT)	QTY	SIZE (Dia – FT)	MATERIAL TYPE	QTY	SIZE (L – FT)	TYPE [1]
18”	Precast	1,289’	2	5’x5’	Precast	2	10’	Curb
24”	Precast	198’	1	7’x7’	Precast			
30”	Precast	419’	1	9’x9’	Precast			
42”	Precast	45’						
5’x5’	Precast	506’						
6’x6’	Precast	215’						

JUNCTION BOXES			OUTFALL STRUCTURES		
QTY	SIZE (FT x FT x FT)	MATERIAL TYPE [2]	QTY	SIZE [3]	DESCRIPTION [4]
N/A			2	18”	SET
			2	18”	SET
			1	30”	SET
			1	42”	SET

CHANNEL			
LENGTH (FT)	BOTTOM WIDTH (FT)	SIDE SLOPE (FT/FT)	LINING MATERIAL TYPE
1,147’	8’	4:1	Concrete trickle channel

1) Grate, Area, Curb, Recessed Curb, Combination, Slotted Drain
2) Cast-in-Place, Precast
3) Pipe size / Culvert Size

CONSTRUCTION SUMMARY FOR WATER

VALVES INSTALLED			PIPE			FIRE HYDRANTS		
SIZE	DESCRIPTION	NO.	SIZE	TYPE	LENGTH	SIZE	TYPE	NO.
N/A			N/A			N/A		
AIR RELEASE								
SIZE	TYPE	NO.						
N/A								
			SERVICES INSTALLED					
			NO.	TYPE				
			N/A					

REMARKS:

CONSTRUCTION SUMMARY FOR WASTEWATER

PIPE			MANHOLES					
SIZE	TYPE	LENGTH	DEPTH	MAKE	STA. NO.	B.C.	EYE	STREET
6”	PVC	84’	24’	Precast	2+57.28	Yes	3	N/A
8”	PVC	807’	24’	Precast	3+33.99	Yes	3	N/A
			13’	Precast	4+51.82	Yes	2	N/A
			12’	Precast	7+06.82	No	2	Seabright Avenue (Street B)
SERVICES INSTALLED								
NO.	**TYPE – S / D**		**TYPE OF MANHOLE COATING: Raven 405 High Build Epoxy**					
1	Single							

REMARKS:

LIMITS OF CONSTRUCTION FOR WATER/WASTEWATER PROJECTS ONLY

PROJECT NAME ____Lidell Walker Phase 2B_____ WORK ORDER #_____

W/WW JOB I.D. _____ SUBDIVISION FILE # _____

LIMITS OF PROJECT WILL BE GIVEN BY ADDRESS OF STREETS LISTED BELOW

STREET NAME	FROM	TO
N/A		

THIS SHEET MUST BE USED WHEN THERE IS NOT A STREET AND DRAINAGE SUMMARY INCLUDED.

GRAY

April 8, 2026

Patricia Davis
City of Hutto
500 W Live Oak Street
Hutto, Texas 78634

Re: Lidell Walker Phase 2B
Engineering Concurrence Letter
GC No. 1725-11738-1

Dear Ms. Davis,

Please find this letter as our formal engineering concurrence for the above-referenced project. On March 31, 2026, I, the undersigned Professional Engineer in the State of Texas, or my representative, made a final visual inspection of Lidell Walker Phase 2B project certifying it was at least 95% complete. This inspection represented the culmination of multiple site visits conducted by Gray Engineering, Inc., singly as well as joint site visit(s) conducted with City of Hutto staff accompanied by Contractor personnel. The conclusion drawn from this final inspection and those site visits conducted during construction is that the construction project has been constructed in general compliance with approved plans, specifications, and requirements of associated regulatory permits. I, therefore, recommend acceptance of this project by the City of Hutto.

Revegetation of areas disturbed in this construction project remain in progress with appropriate erosion controls in place to minimize erosive potential during the grow-in period.

Sincerely,

GRAY CIVIL, INC.

Scott Swiderski, P.E.
Manager, Construction Services

STATE OF TEXAS
SCOTT A. SWIDERSKI
94338
LICENSED
PROFESSIONAL ENGINEER
4-08-26

cc: Austin Seifert, P.E.; Gray Civil, Inc.
Tim Holland, P.E.; Gray Civil, Inc.
Matt Wilkins; Gray Civil, Inc.

Final Costs and Quanities for Lidell Walker Phase 2B

Item No.	Description of Work	UNIT	QTY	UNIT PRICE	Scheduled Value
	WASTEWATER IMPROVEMENTS				
1	6" PVC SDR-26 Gravity Wastewater Line (10'-12' depth), Including Appurtenances, Per Linear Foot, CIP	LF	84	$ 97.38	$ 8,179.92
2	8" PVC SDR-26 Gravity Wastewater Line (10'-12' depth), Including Appurtenances, Per Linear Foot, CIP	LF	255	$ 115.45	$ 29,439.75
3	8" PVC SDR-26 Gravity Wastewater Line (12'-14' depth), Including Appurtenances, Per Linear Foot, CIP	LF	118	$ 135.84	$ 16,029.12
4	8" PVC SDR-26 Gravity Wastewater Line (20'-22' depth), Including Appurtenances, Per Linear Foot, CIP	LF	38	$ 161.83	$ 6,149.54
5	8" PVC SDR-26 Gravity Wastewater Line (22'-24' depth), Including Appurtenances, Per Linear Foot, CIP	LF	372	$ 192.45	$ 71,591.40
6	20" Steel Encasement Including Appurtenances, Per Linear Foot, CIP	LF	165	$ 343.35	$ 56,652.75
7	4' Dia. Standard Wastewater Manhole, Per Each, CIP	EA	3	$ 5,864.89	$ 17,594.67
8	4' Dia. Drop Wastewater Manhole, Per Each, CIP	EA	1	$ 8,236.48	$ 8,236.48
9	Extra Depth 4' Dia. Manhole Extensions, Per Vertical Linear Foot, CIP	VLF	49	$ 512.45	$ 25,110.05
10	Single Wastewater Service, All Lengths, Per Each, CIP	EA	2	$ 1,980.97	$ 3,961.94
11	Trench Safety System, Per Linear Foot, CIP	LF	866	$ 1.23	$ 1,065.18
CO #06	Wastewater Extension	LS	1	$ 2,180.33	$ 2,180.33
				Subtotal for Wastewater Improvements	**$ 246,191.13**
	DRAINAGE IMPROVEMENTS				
1	18" RCP Cl. III Storm Sewer (All Depths), Per Linear Foot, CIP	LF	1,279	$ 81.59	$ 104,353.61
2	24" RCP Cl. III Storm Sewer (All Depths), Per Linear Foot, CIP	LF	198	$ 111.72	$ 22,120.56
3	30" RCP Cl. III Storm Sewer (All Depths), Per Linear Foot, CIP	LF	378	$ 160.73	$ 60,755.94
4	5' x 5' Reinforced Concrete Box (All Depths), Per Linear Foot, CIP	LF	506	$ 634.89	$ 321,254.34
5	5' x 5' Reinforced Concrete Box Manhole, Per Each, CIP	EA	2	$ 5,064.83	$ 10,129.66
6	7' x 7' Reinforced Concrete Box Manhole, Per Each, CIP	EA	1	$ 13,678.38	$ 13,678.38
7	10' Standard Stormwater Curb Inlet, Including Transition Curb, Per Each, CIP	EA	2	$ 5,587.65	$ 11,175.30

Item No.	Description of Work	UNIT	QTY	UNIT PRICE	Scheduled Value
8	4 X 18" Safety End Treatment (SET P-CD), Per Each, CIP	EA	2	$ 10,084.35	$ 20,168.70
9	2 X 18" Safety End Treatment (SET P-CD), Per Each, CIP	EA	2	$ 8,446.89	$ 16,893.78
10	Connect to Existing 30" Storm Sewer Line, Per Each, CIP	EA	1	$ 2,013.20	$ 2,013.20
11	Trench Safety System, Per Linear Foot, CIP	LF	2,361	$ 1.23	$ 2,904.03
12	Trickle Channel with 4:1 Left Side and 6:1 Right Side Slopes (All Depths) Including 7' Wide Concrete Trickle Channel, Excavation & Embankment, Per Linear Foot, CIP	LF	1,147	$ 132.56	$ 152,046.32
13	Mobilization of pipe crew	LS	1	$ 12,500.00	$ 12,500.00
14	Demo existing SET and rock rip rap	LS	1	$ 9,002.15	$ 9,002.15
15	18" RCP Cl. III Storm Sewer (All Depths), Per Linear Foot, CIP	LF	10	$ 95.23	$ 952.30
16	30" RCP Cl. III Storm Sewer (All Depths), Per Linear Foot, CIP	LF	41	$ 205.56	$ 8,427.96
17	42" RCP Cl. III Storm Sewer (All Depths), Per Linear Foot, CIP	LF	45	$ 266.92	$ 12,011.40
18	6' x 6' Reinforced Concrete Box (All Depths), Per Linear Foot, CIP	LF	215	$ 915.15	$ 196,757.25
19	6' x 6' Reinforced Concrete Box Plug, Per Each, CIP	EA	1	$ 2,808.75	$ 2,808.75
20	9' x 9' Reinforced Concrete Box Manhole, Per Each, CIP	EA	1	$ 23,895.98	$ 23,895.98
21	30" SET	EA	1	$ 3,632.55	$ 3,632.55
22	42" SET	EA	1	$ 5,482.55	$ 5,482.55
23	Connect to Existing 6'x 6'" Storm Sewer Line, Per Each, CIP	EA	1	$ 6,863.18	$ 6,863.18
24	Trench Safety System, Per Linear Foot, CIP	LF	311	$ 1.23	$ 382.53
25	Class I Rock Rip Rap	SY	430	$ 54.53	$ 23,447.90
				Subtotal for Drainage Improvements	**$ 1,043,658.32**
	EROSION AND SEDIMENTATION CONTROLS				
1	Silt Fence for Erosion Control, Including Installation, Maintenance & Removal, Per Linear Foot, CIP	LF	6,219	$ 3.68	$ 22,885.92
2	Inlet Protection, Including Installation, Maintenance & Removal, Per Each, CIP	EA	2	$ 115.50	$ 231.00
3	Restoration & Revegetation Including Topsoil, Hydromulch, Fertilizer, and Water, Per Square Yard, CIP	SY	62,016	$ 1.76	$ 109,148.16
4	Stabilized Construction Entrance, Per Each, CIP	EA	1	$ 1,850.00	$ 1,850.00
5	Temporary Rock Berm, Per Linear Foot, CIP	LF	48	$ 28.60	$ 1,372.80
6	Mortared Rock Riprap, Per Square Yard, CIP	SY	195	$ 125.99	$ 24,568.05
CO #06	Restoration & Revegetation Including Topsoil, Hydromulch, Fertilizer, and Water, Per Square Yard, CIP	SY	9,006	$ 1.76	$ 15,850.56

Item No.	Description of Work	UNIT	QTY	UNIT PRICE	Scheduled Value
CO #06	Silt Fence for Erosion Control, Including Installation, Maintenance & Removal, Per Linear Foot, CIP	LF	230	$ 3.68	$ 846.40
CO #06	Temporary Rock Berm, Per Linear Foot, CIP	LF	72	$ 28.60	$ 2,059.20
				Subtotal for Erosion and Sedimentation Controls	**$ 178,812.09**
	STREET IMPROVEMENTS				
1	Subgrade Preparation, Including Sprinkling, Blading & Rolling, Per Square Yard, CIP	SY	10,843	$ 1.97	$ 21,360.71
2	8" Lime Stabilized Subgrade, Including Mixing, Curing, Compacting & Finishing, Per Square Yard, CIP	SY	10,843	$ 11.39	$ 123,501.77
3	9" Crushed Limestone Material, Including Sprinkling, Rolling, Grading, Per Square Yard, CIP (LOCAL)	SY	452	$ 12.26	$ 5,541.52
4	14" Crushed Limestone Material, Including Sprinkling, Rolling, Grading, Per Square Yard, CIP (COLLECTOR)	SY	1,597	$ 18.30	$ 29,225.10
5	21" Crushed Limestone Material, Including Sprinkling, Rolling, Grading, Per Square Yard, CIP (MINOR ARTERIAL)	SY	8,794	$ 26.75	$ 235,239.50
6	2" HMAC Pavement, Per Square Yard, CIP (LOCAL & COLLECTOR)	SY	1,505	$ 16.68	$ 25,103.40
7	6" HMAC Pavement, Per Square Yard, CIP (MINOR ARTERIAL)	SY	7,465	$ 45.25	$ 337,791.25
8	Standard 6" Concrete Curb & Gutter, Per Linear Foot, CIP	LF	2218	$ 24.66	$ 54,695.88
9	18" Concrete Ribbon Curb, Per Linear Foot, CIP	LF	217	$ 19.80	$ 4,296.60
10	Pedestrian Ramps, Including Concrete Landing, Truncated Domes, Flares and Transition Curb, Per Each, CIP	EA	12	$ 1,915.17	$ 22,982.04
11	5' Concrete Sidewalk, Per Linear Feet, CIP	LF	2,716	$ 38.52	$ 104,620.32
12	Traffic Signage, Including Signs & Striping, Per Lump Sum, CIP	LS	1	$ 26,675.25	$ 26,675.25
13	Install Street End Barricade, Per Detail, Per Each, CIP	EA	5	$ 1,182.50	$ 5,912.50
CO #02	5' Concrete Sidewalk, Per Linear Feet, CIP	LF	275	$ 38.52	$ 10,593.00
CO #02	Additional Staking	LS	1	$ 1,500.00	$ 1,500.00
				Subtotal for Street Improvements	**$ 1,009,038.84**
				TOTAL FOR CITY OF HUTTO IMPROVEMENTS	**$ 2,477,700.38**
	Maintenace Bond Holder		Percent	Duration	Bond Amount
	City of Hutto		100%	2 years	$ 2,477,700.38


STATE OF TEXAS
SCOTT A. SWIDERSKI
94338
LICENSED
PROFESSIONAL ENGINEER

5-05-26

Doc #2025006497

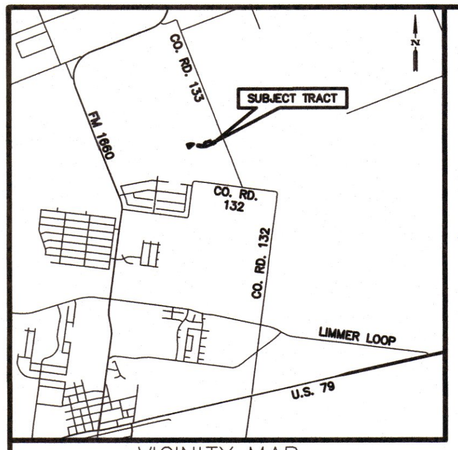

VICINITY MAP
NOT TO SCALE

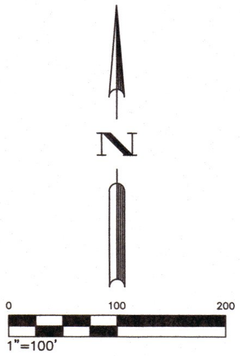

BEARING BASIS NOTE:

BEARING ORIENTATION IS BASED ON THE TEXAS STATE PLANE COORDINATE SYSTEM, CENTRAL ZONE 4203, NAD83. DISTANCES SHOWN HEREON ARE SURFACE VALUES
COMBINED SCALE FACTOR = 0.99988116

SUBMITTED DATE: NOVEMBER 22, 2024

OWNERS:

GRBK EDGEWOOD LLC
A TEXAS LIMITED LIABILITY COMPANY
5501 HEADQUARTERS DRIVE, SUITE 300W
PLANO, TEXAS 75024
TEL: (469) 573-6721

MERITAGE HOMES OF TEXAS, LLC
AN ARIZONA LIMITED LIABILITY COMPANY
12301 RESEARCH BLVD.
BUILDING 4 - 4TH FLOOR
AUSTIN, TEXAS 78759
TEL: (737) 309-5487

SURVEYOR:

BGE, INC.
101 W. LOUIS HENNA BLVD, STE 400
AUSTIN, TEXAS 78728
TEL: 512-879-0400

ENGINEER:

GRAY ENGINEERING, INC.
8834 N CAPITAL OF TEXAS HIGHWAY, SUITE 140
AUSTIN, TEXAS 78759
TEL: 512-452-0371

LEGEND

D.E.	DRAINAGE EASEMENT
DOC.	DOCUMENT
D.R.W.C.	DEED RECORDS OF WILLIAMSON COUNTY
ESMT.	EASEMENT
NO.	NUMBER
NOS.	NUMBERS
O.S.	OPEN SPACE
O.P.R.W.C.	OFFICIAL PUBLIC RECORDS OF WILLIAMSON COUNTY
O.R.W.C.	OFFICIAL RECORDS OF WILLIAMSON COUNTY
PG.	PAGE
P.O.B.	POINT OF BEGINNING
P.O.R.	POINT OF REFERENCE
R.O.W.	RIGHT-OF-WAY
VOL.	VOLUME
( )	RECORD INFORMATION DOC. NO. 202137021 O.P.R.W.C.
{ }	RECORD INFORMATION DOC. NO. 2009044814 O.P.R.W.C.
[ ]	RECORD INFORMATION DOC. NO. 2023089401 O.P.R.W.C.
< >	RECORD INFORMATION VOL. 866, PG. 661 D.R.W.C.
/ /	RECORD INFORMATION DOC. NO. 2024062745 O.P.R.W.C.
●	FOUND 1/2" IRON ROD
▲	FOUND MAG NAIL
○	SET 1/2" IRON ROD W/CAP STAMPED "BGE INC"
△	CALCULATED POINT

SHEET LEGEND

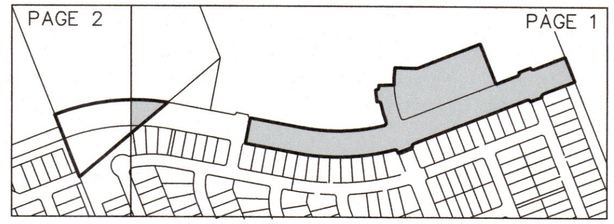

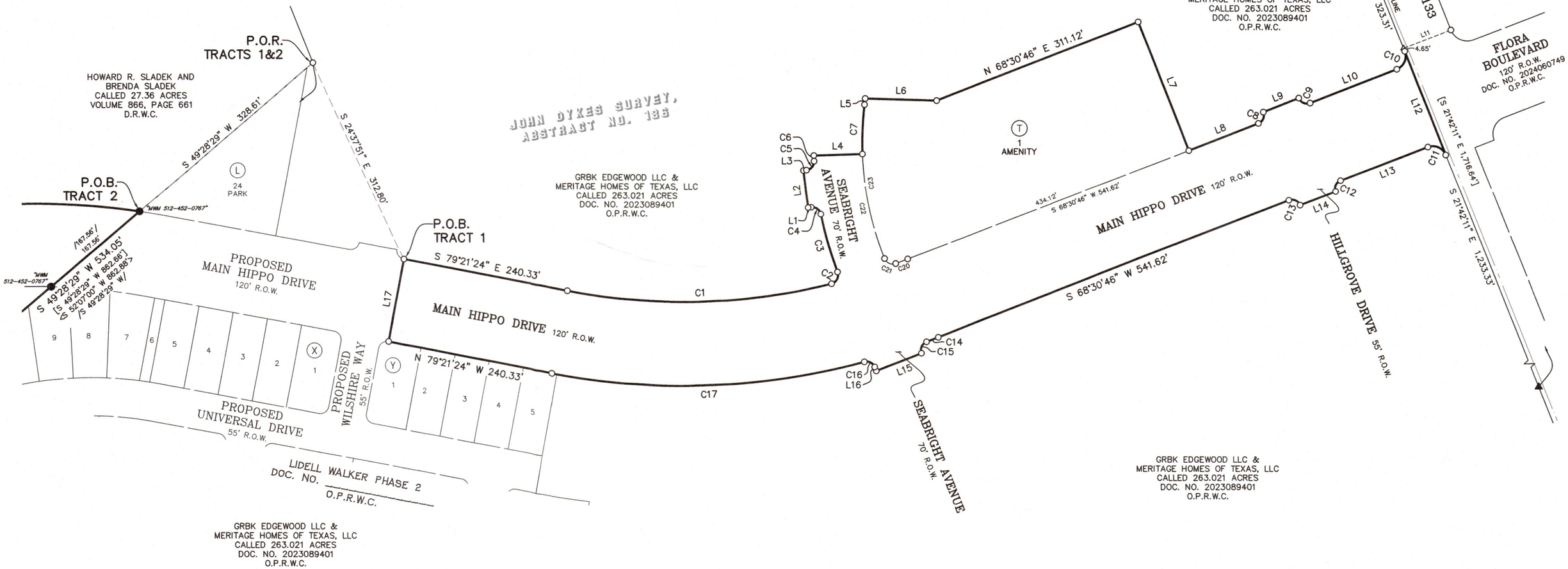

FINAL PLAT

LIDELL WALKER PHASE 2B

A SUBDIVISION OF 8.841 ACRES OF LAND LOCATED IN THE JOHN DYKES SURVEY, ABSTRACT NO. 186, WILLIAMSON COUNTY, TEXAS

BGE, Inc.
101 West Louis Henna Blvd., Suite 400
Austin, Texas 78728
Tel: 512-879-0400 • www.bgeinc.com
TBPELS Registration No. F-1046
TBPELS Licensed Surveying Firm No. 10106502

\\bgeinc\data\TXC\Projects\Green_Brick_Partners\12802-01-Prairie-Winds_Ph-2B\SV\04_Finals\Drawings\Plat\12802-01_Lidell-Walker_Ph2B.dwg, 12/19/2024 11:22 AM, Matthew Misiak

Doc #2025006497

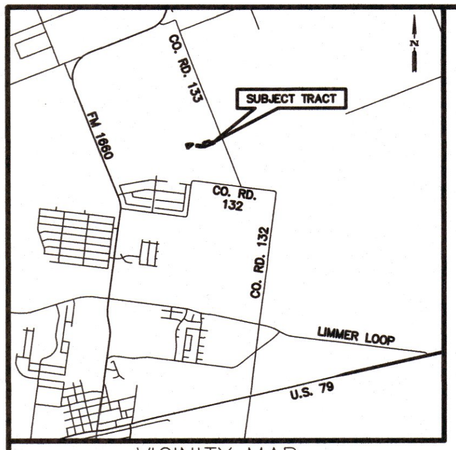

VICINITY MAP
NOT TO SCALE

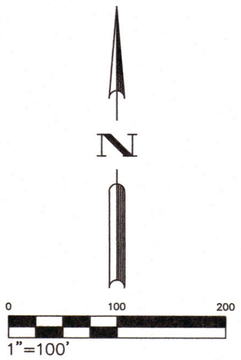

BEARING BASIS NOTE:

BEARING ORIENTATION IS BASED ON THE TEXAS STATE PLANE COORDINATE SYSTEM, CENTRAL ZONE 4203, NAD83. DISTANCES SHOWN HEREON ARE SURFACE VALUES
COMBINED SCALE FACTOR = 0.99988116

LINE TABLE		
NUMBER	BEARING	DISTANCE
L1	S 82°57'24" W	4.50'
L2	N 07°02'36" W	55.00'
L3	N 82°57'24" E	4.50'
L4	N 88°00'19" E	70.00'
L5	N 06°43'31" E	8.75'
L6	S 88°27'36" E	102.68'
L7	S 21°29'14" E	198.82'
L8	N 68°30'46" E	107.50'
L9	N 68°30'46" E	55.00'
L10	N 68°30'46" E	134.20'
L11	N 68°17'49" E	73.32'
L12	S 21°42'11" E	160.00'
L13	S 68°30'46" W	134.81'
L14	S 68°30'46" W	55.00'
L15	S 68°30'46" W	70.00'
L16	N 21°29'14" W	6.14'
L17	N 10°38'36" E	120.00'

LAND USE SCHEDULE		
DESCRIPTION	NO.	ACREAGE
AMENITY	1	2.119 AC.
OPEN SPACE	1	0.856 AC.
RIGHT-OF-WAY	–	5.866 AC.
TOTAL	2	8.841 AC.

SHEET LEGEND

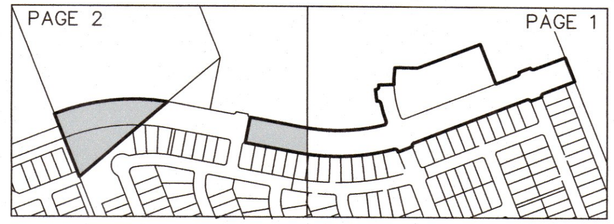

STREET NAMES		
STREET	R.O.W. WIDTH	CENTERLINE LENGTH
MAIN HIPPO DRIVE	120 FT.	1,994 FT.
SEABRIGHT AVENUE	70 FT.	314 FT.
HILLGROVE DRIVE	55 FT.	145 FT.
TOTAL LINEAR FEET	–	2,453 FT.

LOT AREA TABLE			
LOT	BLOCK	SQUARE FEET	TYPE
1	T	92,309	AMENITY

LOT AREA TABLE			
LOT	BLOCK	SQUARE FEET	TYPE
1	U	37,266	O.S.

CURVE TABLE					
NUMBER	ARC LENGTH	RADIUS	DELTA	CHORD BEARING	CHORD DISTANCE
C1	383.84'	890.00'	24°42'38"	N 88°17'17" E	380.87'
C2	21.06'	12.50'	96°32'28"	N 27°39'44" E	18.66'
C3	87.55'	535.00'	9°22'33"	N 15°55'13" W	87.45'
C4	18.72'	12.50'	85°48'39"	N 54°08'16" W	17.02'
C5	18.72'	12.50'	85°48'34"	N 40°03'07" E	17.02'
C6	8.01'	535.00'	0°51'29"	N 02°25'26" W	8.01'
C7	70.77'	465.00'	8°43'13"	N 02°21'55" E	70.70'
C8	19.63'	12.50'	90°00'00"	N 23°30'46" E	17.68'
C9	19.63'	12.50'	90°00'00"	S 66°29'14" E	17.68'
C10	31.49'	20.00'	90°12'57"	N 23°24'18" E	28.34'
C11	31.34'	20.00'	89°47'03"	N 66°35'42" W	28.23'
C12	19.63'	12.50'	90°00'00"	S 23°30'46" W	17.68'
C13	19.63'	12.50'	90°00'00"	N 66°29'14" W	17.68'
C14	18.16'	1,010.00'	1°01'49"	N 69°01'41" E	18.16'
C15	19.86'	12.50'	91°01'49"	S 24°01'41" W	17.84'
C16	18.25'	12.50'	83°38'00"	N 63°18'14" W	16.67'
C17	454.16'	1,010.00'	25°45'50"	N 87°45'41" E	450.34'
C18	529.92'	1,010.00'	30°03'41"	N 83°36'22" E	523.86'
C19	356.61'	890.00'	22°57'27"	S 80°05'10" W	354.23'
C20	18.65'	890.00'	1°12'01"	N 69°06'47" E	18.65'
C21	19.41'	12.50'	88°57'25"	S 65°48'30" E	17.52'
C22	156.92'	465.00'	19°20'06"	S 11°39'44" E	156.18'
C23	227.68'	465.00'	28°03'16"	S 07°18'05" E	225.42'

RECORD CURVE TABLE					
NUMBER	ARC LENGTH	RADIUS	DELTA	CHORD BEARING	CHORD DISTANCE
/C18/	/530.03'/	/1,010.00'/	/30°04'05"/	/N 83°36'10" E/	/523.97'/
/C19/	/356.70'/	/890.00'/	/22°57'48"/	/S 80°05'00" W/	/354.32'/

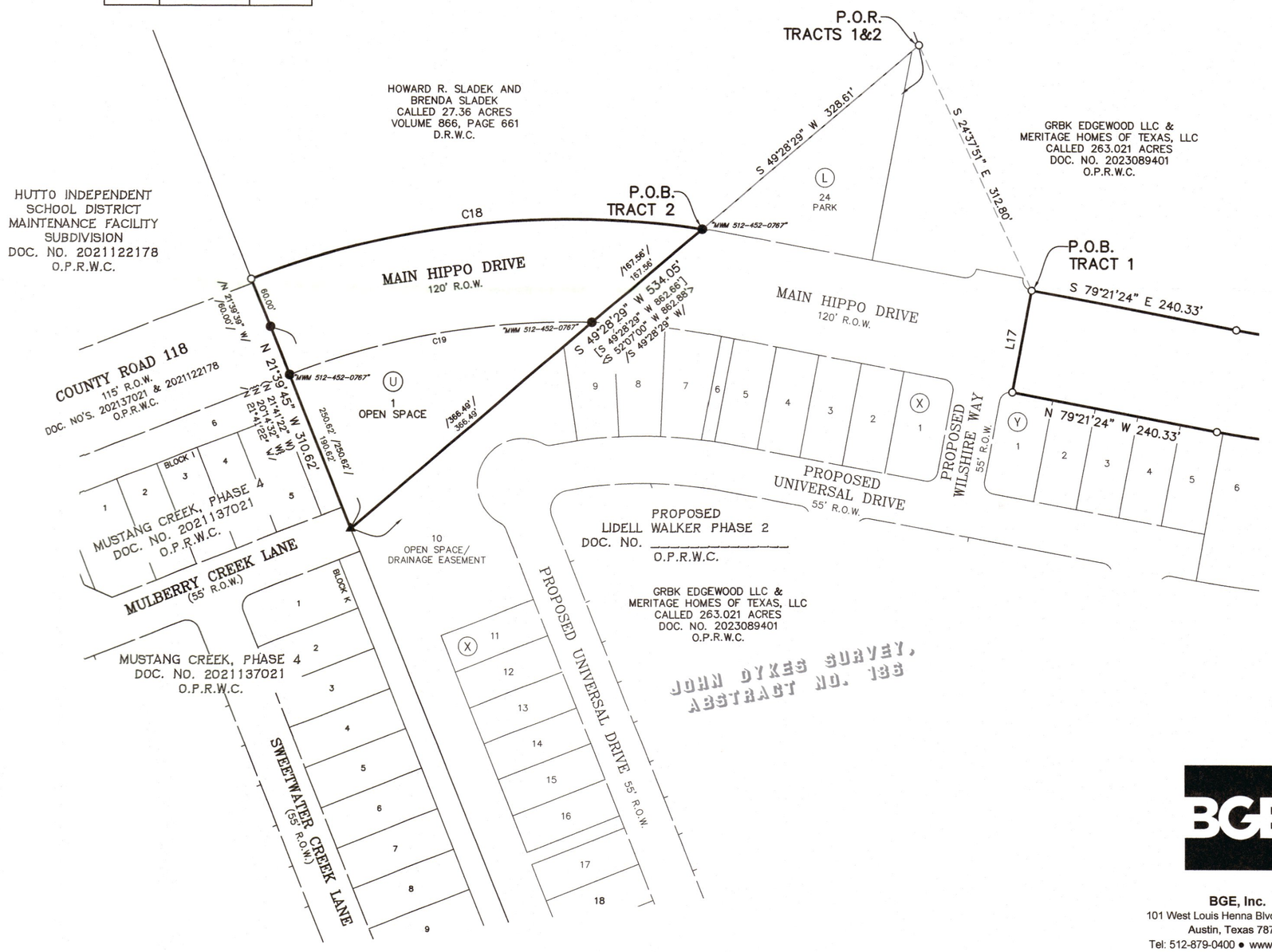

FINAL PLAT

LIDELL WALKER PHASE 2B

A SUBDIVISION OF 8.841 ACRES OF LAND LOCATED IN THE JOHN DYKES SURVEY, ABSTRACT NO. 186, WILLIAMSON COUNTY, TEXAS

BGE, Inc.
101 West Louis Henna Blvd., Suite 400
Austin, Texas 78728
Tel: 512-879-0400 • www.bgeinc.com
TBPELS Registration No. F-1046
TBPELS Licensed Surveying Firm No. 10106502

\\bgeinc\data\TXC\Projects\Green_Brick_Partners\12802-01-Prairie-Winds_Ph-2B\SV\04_Finals\Drawings\Plat\12802-01_Lidell-Walker_Ph2B.dwg, 12/19/2024 11:22 AM, Matthew Mielok

DOC #20250006497

METES & BOUNDS DESCRIPTION

FIELD NOTES FOR A 8.841 ACRE TRACT OF LAND OUT OF THE JOHN DYKES SURVEY, ABSTRACT NO. 186, WILLIAMSON COUNTY, TEXAS; BEING A PORTION OF A CALLED 263.021 ACRE TRACT OF LAND AS TO CONVEYED TO GRBK EDGEWOOD LLC AND MERITAGE HOMES OF TEXAS, LLC BY SPECIAL WARRANTY DEED AS RECORDED IN DOCUMENT NUMBER 2023089401 OF THE OFFICIAL PUBLIC RECORDS OF WILLIAMSON COUNTY, TEXAS; AND ALL OF A CALLED 0.86 ACRE TRACT (TRACT I) AND A CALLED 1.22 ACRE TRACT (TRACT II) OF LAND AS TO CONVEYED TO GRBK EDGEWOOD LLC BY GENERAL WARRANTY DEED RECORDED IN DOCUMENT NUMBER 2024062745 OF THE OFFICIAL PUBLIC RECORDS OF WILLIAMSON COUNTY, TEXAS; SAID 8.841 ACRE TRACT OF LAND CONSISTING OF TWO TRACTS AND BEING MORE PARTICULARLY DESCRIBED BY METES AND BOUNDS IN TWO PARTS AS FOLLOWS:

TRACT 1:

COMMENCING for POINT OF REFERENCE at a 1/2–inch iron rod with cap stamped "BGE INC" set at the southeast corner of the remainder of a called 27.36 acre tract of land as conveyed to Howard R. Sladek and Brenda Sladek by warranty deed recorded in Volume 866, Page 661 of the Deed Records of Williamson County, Texas, at an interior corner of the above described 263.021–acre tract; Thence, over and across said 263.021–acre tract, S 24°37'51" E a distance of 312.80 feet to a 1/2–inch iron rod with cap stamped "BGE INC" set for the most westerly northwest corner and POINT OF BEGINNING of the herein described tract;

THENCE, continuing over and across said 263.021–acre tract, S 79°21'24" E a distance of 240.33 feet to a 1/2–inch iron rod with cap stamped "BGE INC" set at a point of curvature of a curve to the left;

THENCE, continuing over and across said 263.021–acre tract, along said curve to the left, an arc distance of 383.84 feet, having a radius of 890.00 feet, a central angle of 24°42'38" and chord which bears N 88°17'17" E a distance of 380.87 feet to a 1/2–inch iron rod with cap stamped "BGE INC" set at a point of compound curvature;

THENCE, continuing over and across said 263.021–acre tract, along said curve to the left, an arc distance of 21.06 feet, having a radius of 12.50 feet, a central angle of 96°32'28" and chord which bears N 27°39'44" E a distance of 18.66 feet to a 1/2–inch iron rod with cap stamped "BGE INC" set for a point of reverse curvature;

THENCE, continuing over and across said 263.021–acre tract, along said curve to the right, an arc distance of 87.55 feet, having a radius of 535.00 feet, a central angle of 9°22'33" and chord which bears N 15°55'13" W a distance of 87.45 feet to a 1/2–inch iron rod with cap stamped "BGE INC" set for a point of reverse curvature;

THENCE, continuing over and across said 263.021–acre tract, along said curve to the left, an arc distance of 18.72 feet, having a radius of 12.50 feet, a central angle of 85°48'39" and chord which bears N 54°08'16" W a distance of 17.02 feet to a 1/2–inch iron rod with cap stamped "BGE INC" set for a point of tangency;

THENCE, continuing over and across said 263.021–acre tract, S 82°57'24" W a distance of 4.50 feet to a 1/2–inch iron rod with cap stamped "BGE INC" set for an exterior corner of the herein described tract;

THENCE, continuing over and across said 263.021–acre tract, N 07°02'36" W a distance of 55.00 feet to a 1/2–inch iron rod with cap stamped "BGE INC" set for an exterior corner of the herein described tract;

THENCE, continuing over and across said 263.021–acre tract, N 82°57'24" E a distance of 4.50 feet to a 1/2–inch iron rod with cap stamped "BGE INC" set at an a point of curvature of a curve to the left;

THENCE, continuing over and across said 263.021–acre tract, along said curve to the left, an arc distance of 18.72 feet, having a radius of 12.50 feet, a central angle of 85°48'34" and chord which bears N 40°03'07" E a distance of 17.02 feet to a 1/2–inch iron rod with cap stamped "BGE INC" set for a point of reverse curvature;

THENCE, continuing over and across said 263.021–acre tract, along said curve to the right, an arc distance of 8.01 feet, having a radius of 535.00 feet, a central angle of 0°51'29" and chord which bears N 02°25'26" W a distance of 8.01 feet to a 1/2–inch iron rod with cap stamped "BGE INC" set for an exterior corner of the herein described tract;

THENCE, continuing over and across said 263.021–acre tract, N 88°00'19" E a distance of 70.00 feet to a 1/2–inch iron rod with cap stamped "BGE INC" set at an a point of curvature of a curve to the left;

THENCE, continuing over and across said 263.021–acre tract, along a curve to the right, an arc distance of 70.77 feet, having a radius of 465.00 feet, a central angle of 08°43'13" and chord which bears N 02°21'55" E a distance of 70.70 feet to a 1/2–inch iron rod with cap stamped "BGE INC" set at a point of tangency;

THENCE, continuing over and across said 263.021–acre tract, N 06°43'31" E a distance of 8.75 feet to a 1/2–inch iron rod with cap stamped "BGE INC" set for the most northerly west corner of the herein described tract;

THENCE, continuing over and across said 263.021–acre tract, S 88°27'36" E a distance of 102.68 feet to a 1/2–inch iron rod with cap stamped "BGE INC" set for an angle point;

THENCE, continuing over and across said 263.021–acre tract, N 68°30'46" E a distance of 311.12 feet to a 1/2–inch iron rod with cap stamped "BGE INC" set for the most northerly corner of the herein described tract;

THENCE, continuing over and across said 263.021–acre tract, S 21°29'14" E a distance of 198.82 feet to a 1/2–inch iron rod with cap stamped "BGE INC" set for an interior corner of the herein described tract;

THENCE, continuing over and across said 263.021–acre tract, N 68°30'46" E a distance of 107.50 feet to a 1/2–inch iron rod with cap stamped "BGE INC" set at a point of curvature of a curve to the left;

THENCE, continuing over and across said 263.021–acre tract, along said curve to the left, an arc distance of 19.63 feet, having a radius of 12.50 feet, a central angle of 90°00'00" and chord which bears N 23°30'46" E a distance of 17.68 feet to a 1/2–inch iron rod with cap stamped "BGE INC" set for an exterior corner of the herein described tract;

THENCE, continuing over and across said 263.021–acre tract, N 68°30'46" E a distance of 55.00 feet to a 1/2–inch iron rod with cap stamped "BGE INC" set for an exterior corner of the herein described tract at a point of curvature of a non–tangent curve to the left;

THENCE, continuing over and across said 263.021–acre tract, along a curve to the left, an arc distance of 19.63 feet, having a radius of 12.50 feet, a central angle of 90°00'00" and chord which bears S 66°29'14" E a distance of 17.68 feet to a 1/2–inch iron rod with cap stamped "BGE INC" set at a point of tangency;

THENCE, continuing over and across said 263.021–acre tract, N 68°30'46" E a distance of 134.20 feet to 1/2–inch iron rod with cap stamped "BGE INC" set at a point of curvature of a curve to the left;

THENCE, continuing over and across said 263.021–acre tract, along said curve to the left an arc distance of 31.49 feet, having a radius of 20.00 feet, a central angle of 90°12'57" and a chord which bears N 23°24'18" E a distance of 28.34 feet to 1/2–inch iron rod with cap stamped "BGE INC" set on the westerly right–of–way of County Road 133 (R.O.W varies) and the east line of said 263.021–acre tract, for a northeast corner of the herein described tract, from which a 1/2–inch iron rod with cap stamped "BGE INC" set on the westerly right–of–way of said County Road 133, at an angle point of said 263.021–acre tract bears N 21°42'11" W a distance of 323.31 feet;

THENCE, with the westerly right–of–way line of said County Road 133 and the east line of said 263.021–acre tract, S 21°42'11" E a distance of 160.00 feet to a 1/2–inch iron rod with cap stamped "BGE INC" set at a point of curvature of a non–tangent curve to the left, for the southeast corner of the herein described tract, from which a 60D nail found on the westerly right–of–way of said County Road 133, at an angle point of said 263.021–acre tract bears S 21°42'11" E a distance of 1,233.33 feet;

THENCE, departing the westerly right–of–way line of said County Road 133, over and across said 263.021–acre tract, along said curve to the left an arc distance of 31.34 feet, having a radius of 20.00 feet, a central angle of 89°47'03" and a chord which bears N 66°35'42" W a distance of 28.23 feet to a 1/2–inch iron rod with cap stamped "BGE INC" set at a point tangency;

THENCE, continuing over and across said 263.021–acre tract, S 68°30'46" W a distance of 134.81 feet to a 1/2–inch iron rod with cap stamped "BGE INC" set at a point of curvature of a curve to the left;

THENCE, continuing over and across said 263.021–acre tract, along said curve to the left, an arc distance of 19.63 feet, having a radius of 12.50 feet, a central angle of 90°00'00" and chord which bears S 23°30'46" W a distance of 17.68 feet to a 1/2–inch iron rod with cap stamped "BGE INC" set for an exterior corner of the herein described tract;

THENCE, continuing over and across said 263.021–acre tract, S 68°30'46" W a distance of 55.00 feet to a 1/2–inch iron rod with cap stamped "BGE INC" set for an exterior corner of the herein described tract at a point of curvature of a non–tangent curve to the left;

THENCE, continuing over and across said 263.021–acre tract, along said curve to the left, an arc distance of 19.63 feet, having a radius of 12.50 feet, a central angle of 90°00'00" and chord which bears N 66°29'14" W a distance of 17.68 feet to a 1/2–inch iron rod with cap stamped "BGE INC" set at a point of tangency;

THENCE, continuing over and across said 263.021–acre tract, S 68°30'46" W a distance of 541.62 feet to a 1/2–inch iron rod with cap stamped "BGE INC" set at a point of curvature of a curve to the right;

THENCE, continuing over and across said 263.021–acre tract, along said curve to the right, an arc distance of 18.16 feet, having a radius of 1,010.00 feet, a central angle of 01°01'49" and chord which bears S 69°01'41" W a distance of 18.16 feet to a 1/2–inch iron rod with cap stamped "BGE INC" set at a point of reverse curvature;

THENCE, continuing over and across said 263.021–acre tract, along said curve to the left, an arc distance of 19.86 feet, having a radius of 12.50 feet, a central angle of 91°01'49" and chord which bears S 24°01'41" W a distance of 17.84 feet to a 1/2–inch iron rod with cap stamped "BGE INC" set at a point of tangency;

THENCE, continuing over and across said 263.021–acre tract, S 68°30'46" W a distance of 70.00 feet to a 1/2–inch iron rod with cap stamped "BGE INC" set for an exterior corner of the herein described tract;

THENCE, continuing over and across said 263.021–acre tract, N 21°29'14" W a distance of 6.14 feet to a 1/2–inch iron rod with cap stamped "BGE INC" set at a point of curvature of a curve to the left;

THENCE, continuing over and across said 263.021–acre tract, along said curve to the left, an arc distance of 18.25 feet, having a radius of 12.50 feet, a central angle of 83°38'00" and chord which bears N 63°18'14" W a distance of 16.67 feet to a 1/2–inch iron rod with cap stamped "BGE INC" set at a point of reverse curvature;

THENCE, continuing over and across said 263.021–acre tract, along said curve to the right, an arc distance of 454.16 feet, having a radius of 1,010.00 feet, a central angle of 25°45'50" and chord which bears S 87°45'41" W a distance of 450.34 feet to a 1/2–inch iron rod with cap stamped "BGE INC" set at a point of tangency;

THENCE, continuing over and across said 263.021–acre tract, N 79°21'24" W a distance of 240.33 feet to a 1/2–inch iron rod with cap stamped "BGE INC" set for the southwest corner of the herein described tract;

THENCE, continuing over and across said 263.021–acre tract, N 10°38'36" E a distance of 120.00 feet to the POINT OF BEGINNING and containing 6.761 acres of land, more or less.

TRACT 2:

COMMENCING for POINT OF REFERENCE at a 1/2–inch iron rod with cap stamped "BGE INC" set at the southeast corner of the remainder of a called 27.36 acre tract of land as conveyed to Howard R. Sladek and Brenda Sladek by warranty deed recorded in Volume 866, Page 661 of the Deed Records of Williamson County, Texas, at an interior corner of the above described 263.021–acre tract; Thence; with the southeast line of said 27.36–acre tract and a northwest line of said 263.021–acre tract, S 49°28'29" W a distance of 328.61 feet to a 1/2–inch iron rod with cap stamped "MWM 512–452–0767" found at the northeast corner of the above described 1.22–acre tract (Tract II) for the northeast corner and POINT OF BEGINNING of the herein described tract;

THENCE, with the southeast line of said 1.22–acre tract (Tract II) and a northwest line of said 263.021–acre tract, S 49°28'29" W pass a 1/2–inch iron rod with cap stamped "MWM 512–452–0767" found at the common east corner of said 1.22–acre tract (Tract II) and the above described 0.86–acre tract (Tract I) and continuing on for a total distance of 534.05 feet to a mag nail found on the northwest line of Mustang Creek, Phase 4 a subdivision as recorded in Document Number 2021137021 of the Official Public Records of Williamson County, Texas, at the south corner of said 0.86–acre tract (Tract I) and a west corner of said 263.021–acre tract, for the south corner of the herein described tract;

THENCE, with the southwest lines of said 0.86–acre tract (Tract I) and 1.22–acre tract (Tract II) and the northwest lines of said Mustang Creek, Phase 4 and the Hutto Independent School District Maintenance Facility Subdivision as recorded in Document Number 2021122178 of the Official Public Records of Williamson County, Texas, N 21°39'45" W, pass a 1/2–inch iron rod with cap stamped "MWM 512–452–0767" found at the common west corner of said 0.86–acre tract (Tract I) and said 1.22–acre tract (Tract II), at the southeast terminus of County Road 118 (60' right–of–way) as dedicated by said Mustang Creek, Phase 4 subdivision at a distance of 190.62 feet, pass a 1/2–inch iron rod found at the northeast corner of said Mustang Creek, Phase 4, being the common east terminus that portion of said County Road 118 (60' right–of–way) and the portion of County Road 118 (55' right–of–way) as dedicated by said Hutto Independent School District Maintenance Facility Subdivision a distance of 250.62 feet, and continuing on for a total distance of 310.62 feet to a 1/2–inch iron rod with cap stamped "BGE INC" set at the northwest corner of said 1.22–acre tract (Tract II) being the southwest corner of said Sladek remainder tract, at a point of curvature of a non–tangent curve to the right, for the northwest corner of the herein described tract;

THENCE, with the north line of said 1.22–acre tract (Tract II) and the south line of said Sladek remainder tract, along said curve to the right on arc distance of 529.92 feet, having a radius of 1,010.00 feet, a central angle of 30°03'41" and chord which bears N 83°36'22" E, a distance of 523.86 feet to the POINT OF BEGINNING and containing 2.080 acres of land, more or less.

TRACT 1 AND TRACT 2 COMPRISING A TOTAL OF 8.841 ACRES OF LAND, MORE OR LESS.

FINAL PLAT

LIDELL WALKER PHASE 2B

A SUBDIVISION OF 8.841 ACRES OF LAND LOCATED IN THE JOHN DYKES SURVEY, ABSTRACT NO. 186, WILLIAMSON COUNTY, TEXAS

BGE, Inc.
101 West Louis Henna Blvd., Suite 400
Austin, Texas 78728
Tel: 512-879-0400 • www.bgeinc.com
TBPELS Registration No. F-1046
TBPELS Licensed Surveying Firm No. 10106502

\\bgeinc\data\TXC\Projects\Green Brick Partners\12802-01-Prairie Winds Ph-2B\SVY\04 Finals\Drawings\Plat\12802-01_Lidell-Walker_Ph2B.dwg, 12/19/2024 1:45 PM, Matthew Misiak

Doc #2025006497

STATE OF TEXAS §
COUNTY OF TRAVIS §

KNOW ALL MEN BY THESE PRESENTS:

THAT GRBK EDGEWOOD LLC, A TEXAS LIMITED LIABILITY COMPANY, ACTING HEREIN BY AND THROUGH AUSTIN EVETTS, IT'S AUTHORIZED SIGNER AND MERITAGE HOMES OF TEXAS, LLC, AN ARIZONA LIMITED LIABILITY COMPANY ACTING HEREIN BY AND THROUGH BRANDON HAMMANN, IT'S VICE PRESIDENT OF LAND DEVELOPMENT, OWNERS OF A CALLED 263.021 ACRE TRACT OF LAND AS CONVEYED TO THEM BY SPECIAL WARRANTY DEED RECORDED IN DOCUMENT NUMBER 2023089401 OF THE OFFICIAL PUBLIC RECORDS OF WILLIAMSON COUNTY, TEXAS; AND GRBK EDGEWOOD LLC, A TEXAS LIMITED LIABILITY COMPANY, BEING OWNER OF 2.08 ACRES OF LAND AS CONVEYED TO IT BY GENERAL WARRANTY DEED RECORDED IN DOCUMENT NUMBER 2024062745 OF THE OFFICIAL PUBLIC RECORDS OF WILLIAMSON COUNTY, TEXAS; DOES HEREBY SUBDIVIDE 8.841 ACRES OF LAND IN ACCORDANCE WITH THE PLAT SHOWN HEREON, TO BE KNOWN AS:

LIDELL WALKER PHASE 2B

AND DOES HEREBY DEDICATE TO THE PUBLIC THE USE OF THE STREETS AND EASEMENTS SHOWN HEREON, SUBJECT TO ANY EASEMENTS AND/OR RESTRICTIONS HERETOFORE GRANTED AND NOT RELEASED.

WITNESS MY HAND, THIS THE 19 DAY OF December, 2024, A.D.

AUSTIN EVETTS, AUTHORIZED SIGNER
GRBK EDGEWOOD LLC
5501 HEADQUARTERS DRIVE, SUITE 300W
PLANO, TEXAS 75024

STATE OF TEXAS §
COUNTY OF TRAVIS §

BEFORE ME, THE UNDERSIGNED AUTHORITY, PERSONALLY APPEARED AUSTIN EVETTS, KNOWN TO ME TO BE THE PERSON WHOSE NAME IS SUBSCRIBED TO THE FOREGOING INSTRUMENT AND ACKNOWLEDGED TO ME THAT HE EXECUTED THE SAME FOR THE PURPOSES AND CONSIDERATION THEREIN EXPRESSED AND IN THE CAPACITY THEREIN STATED.

NOTARY PUBLIC, STATE OF TEXAS

SAVANNAH AMBER SUPPAN
Notary ID #132523553
My Commission Expires
June 16, 2028

Savannah amber Suppan
PRINT NOTARY'S NAME
MY COMMISSION EXPIRES 06/16/2028

WITNESS MY HAND, THIS THE 19 DAY OF December, 2024 A.D.

BRANDON HAMMANN, VICE PRESIDENT OF LAND DEVELOPMENT
MERITAGE HOMES OF TEXAS, LLC
12301 RESEARCH BLVD.
BUILDING 4 – 4TH FLOOR
AUSTIN, TEXAS 78759

STATE OF TEXAS §
COUNTY OF TRAVIS §

BEFORE ME, THE UNDERSIGNED AUTHORITY, PERSONALLY APPEARED BRANDON HAMMANN, KNOWN TO ME TO BE THE PERSON WHOSE NAME IS SUBSCRIBED TO THE FOREGOING INSTRUMENT AND ACKNOWLEDGED TO ME THAT HE EXECUTED THE SAME FOR THE PURPOSES AND CONSIDERATION THEREIN EXPRESSED AND IN THE CAPACITY THEREIN STATED.

NOTARY PUBLIC, STATE OF TEXAS

SAVANNAH AMBER SUPPAN
Notary ID #132523553
My Commission Expires
June 16, 2028

Savannah amber Suppan
PRINT NOTARY'S NAME
MY COMMISSION EXPIRES 06/16/2028

FINAL PLAT
LIDELL WALKER PHASE 2B

A SUBDIVISION OF 8.841 ACRES OF LAND LOCATED IN THE JOHN DYKES SURVEY, ABSTRACT NO. 186, WILLIAMSON COUNTY, TEXAS

I, TIMOTHY M. HOLLAND, AM AUTHORIZED UNDER THE LAWS OF THE STATE OF TEXAS, TO PRACTICE THE PROFESSION OF ENGINEERING, AND DO HEREBY CERTIFY THAT THIS PLAT IS FEASIBLE FROM AN ENGINEERING STANDPOINT, AND IS TRUE AND CORRECT TO THE BEST OF MY KNOWLEDGE.

TIMOTHY M. HOLLAND, P.E.
LICENSED PROFESSIONAL ENGINEER NO. 94848
GRAY ENGINEERING, INC.
8834 N. CAPITAL OF TEXAS HIGHWAY, SUITE 140
AUSTIN, TX 78759

12/20/2024
DATE

STATE OF TEXAS
TIMOTHY M. HOLLAND
94848
LICENSED
PROFESSIONAL ENGINEER

I, JONATHAN O. NOBLES, AM AUTHORIZED UNDER THE LAWS OF THE STATE OF TEXAS, TO PRACTICE THE PROFESSION OF LAND SURVEYING, AND DO HEREBY CERTIFY THAT THIS PLAT IS TRUE AND CORRECT TO THE BEST OF MY KNOWLEDGE AND WAS PREPARED FROM AN ACTUAL ON THE GROUND SURVEY OF THE PROPERTY UNDER MY SUPERVISION ON APRIL 21, 2021.

JONATHAN O. NOBLES, R.P.L.S.
REGISTERED PROFESSIONAL LAND SURVEYOR NO. 5777
BGE, INC.
101 WEST LOUIS HENNA BLVD., SUITE 400
AUSTIN, TEXAS 78728

12/19/2024
DATE

STATE OF TEXAS
REGISTERED
JONATHAN O. NOBLES
5777
PROFESSIONAL
LAND SURVEYOR

GENERAL NOTES:

1. BEARING ORIENTATION IS BASED ON THE TEXAS STATE PLANE COORDINATE SYSTEM, CENTRAL ZONE 4203, NAD83.
2. NO BUILDING, FENCING, LANDSCAPING OR STRUCTURES ARE ALLOWED WITHIN ANY DRAINAGE OR WASTEWATER EASEMENT UNLESS EXPRESSLY PERMITTED BY THE CITY OF HUTTO.
3. BUILDING SETBACKS SHALL CONFORM TO UDC REQUIREMENTS, AS AMENDED.
4. A TEN (10) FOOT PUBLIC UTILITY EASEMENT (PUE) IS HEREBY DEDICATED ALONG AND ADJACENT TO ALL STREET SIDE PROPERTY LINES.
5. A THREE (3) FOOT PUBLIC UTILITY EASEMENT (PUE) IS HEREBY DEDICATED ON EACH SIDE OF ALL INTERIOR SIDE LOT LINES.
6. IF PARKING IS DESIRED ON BOTH SIDES OF THE STREET THEN THE STREETS MUST BE A MINIMUM OF 33 FEET WIDE. IF THE STREETS ARE LESS THAN 33 FEET IN WIDTH FIRE LANE SIGNAGE IS REQUIRED. (2018 IFC APPENDIX D SEC. 103.6 – D103.6.2)
7. NO LOT IN THIS SUBDIVISION SHALL BE OCCUPIED UNTIL CONNECTION IS MADE TO PUBLIC WATER AND WASTEWATER UTILITIES.
8. SIDEWALKS AND TREES SHALL BE PROVIDED ON BOTH SIDES OF ALL STREETS WITHIN THIS SUBDIVISION.
9. SIDEWALKS AND TREES SHALL BE PROVIDED ALONG ALL STREETS BOUNDING THIS SUBDIVISION.
10. ALL FENCING THAT IS NOT ON A PRIVATE LOT TO BE MAINTAINED BY THE HOME OWNERS ASSOCIATION.
11. STREET LIGHTING SHALL BE PROVIDED BY THE DEVELOPER IN CONFORMANCE WITH THE UDC REQUIREMENTS, AS AMENDED.
12. THIS TRACT IS WITHIN WATER CCN SERVICE AREA 10970. WATER AND WASTEWATER WILL BE AVAILABLE THROUGH THE CITY OF HUTTO AFTER THE APPROPRIATE WATER AND WASTEWATER SYSTEMS ARE INSTALLED TO THIS SITE. THE CITY OF HUTTO ASSUMES NO OBLIGATIONS FOR INSTALLING ANY WATER AND WASTEWATER IMPROVEMENTS REQUIRED TO SERVE THIS SITE.
13. NO PORTION OF THIS TRACT IS ENCROACHED BY THE ULTIMATE 1% ANNUAL CHANCE FLOODPLAIN.
14. NO PORTION OF THIS TRACT IS ENCROACHED BY ANY SPECIAL FLOOD HAZARD AREAS INUNDATED BY THE 1% ANNUAL CHANCE FLOODPLAIN AS IDENTIFIED BY THE U.S. FEDERAL EMERGENCY MANAGEMENT AGENCY BOUNDARY MAP (FLOOD INSURANCE RATE MAP) COMMUNITY PANEL NUMBER 48491C0510F, EFFECTIVE DATE DECEMBER 20, 2019, FOR WILLIAMSON COUNTY, TEXAS.
15. IN ORDER TO PROMOTE DRAINAGE AWAY FROM A STRUCTURE, THE SLAB ELEVATIONS SHALL BE BUILT AT LEAST ONE (1) FOOT ABOVE THE SURROUNDING GROUND AND SHOULD BE GRADED AWAY FROM THE STRUCTURE AT A SLOPE OF ½" PER FOOT FOR A DISTANCE OF AT LEAST TEN (10) FEET.
16. ALL SUBDIVISION CONSTRUCTION SHALL CONFORM TO THE CITY OF HUTTO UNIFIED DEVELOPMENT CODE AS AMENDED, CONSTRUCTION STANDARDS, AND GENERALLY ACCEPTED ENGINEERING PRACTICES.
17. ON-SITE STORMWATER DETENTION FACILITIES WILL BE PROVIDED TO REDUCE POST-DEVELOPMENT PEAK RATES OF DISCHARGE OF THE 2, 10, 25 AND 100-YEAR STORM EVENTS, IF NECESSARY.
18. ALL EASEMENTS ON PRIVATE PROPERTY SHALL BE MAINTAINED BY THE PROPERTY OWNER OR HIS OR HER ASSIGNS.
19. ALL DRAINAGE LOTS SHALL BE OWNED AND MAINTAINED BY THE HOMEOWNER'S ASSOCIATION.
20. THIS SUBDIVISION IS ZONED SF-1 VILLAGE.
21. ALL LOTS IN THIS SUBDIVISION ARE RESTRICTED TO SINGLE FAMILY RESIDENTIAL USE, UNLESS OTHERWISE INDICATED.
22. THE MAXIMUM IMPERVIOUS COVERAGE PER RESIDENTIAL LOT IS 57%.
23. SUBDIVISION WALLS SHALL BE LOCATED AND CONSTRUCTED IN ACCORDANCE WITH CHAPTER 4 OF THE UDC, AS AMENDED.
24. STREETS 26 FEET WIDE TO LESS THAN 32 FEET WIDE REQUIRE FIRE LANE STRIPING ON ONE SIDE OF THE STREET.
25. TRAFFIC IMPACT FEES WILL BE DUE BASED ON RESOLUTION R-2021-147A.
26. A SECOND POINT OF ACCESS, MEETING ALL CRITERIA OF THE MOST RECENTLY ADOPTED FIRE CODE, AS AMENDED, SHALL BE REQUIRED ON ALL PLATS OF RESIDENTIAL SUBDIVISIONS CONTAINING MORE THAN 29 DWELLING UNITS.

CITY DEVELOPMENT SERVICES SIGNATURES:

THIS SUBDIVISION IS LOCATED WITHIN THE CITY LIMITS OF HUTTO, THIS THE 10 DAY OF January, 2025.

ASHLEY BAILEY, DEVELOPMENT SERVICES DIRECTOR

1-10-25
DATE

THIS PLAT WAS APPROVED FOR RECORDING BY THE HUTTO PLANNING AND ZONING COMMISSION ON THE ON THE 3 DAY OF December, 2024.

~~SUSANNA BOYER~~, CHAIR
RICHARD J. HUDSON

1-7-25
DATE

STATE OF TEXAS §
§ KNOW ALL MEN BY THESE PRESENTS:
COUNTY OF WILLIAMSON §

THAT I, NANCY E. RISTER, CLERK OF THE COUNTY COURT OF SAID COUNTY, DO HEREBY CERTIFY THAT THE FOREGOING INSTRUMENT IN WRITING, WITH ITS CERTIFICATION OF AUTHENTICATION, WAS FILED FOR RECORD IN MY OFFICE ON THE 29th DAY OF January, 2025 A.D., AT 8:15 O'CLOCK A.M. AND DULY RECORDED ON THE 30th DAY OF January, 2025 A.D., AT 8:46 O'CLOCK A.M. IN THE PLAT RECORDS OF SAID COUNTY, IN DOCUMENT NO. 2025006497.

WITNESS MY HAND AND SEAL OF THE COUNTY COURT OF SAID COUNTY, AT MY OFFICE IN GEORGETOWN, TEXAS, THE DATE LAST ABOVE WRITTEN.

NANCY E. RISTER, CLERK, COUNTY COURT
WILLIAMSON COUNTY, TEXAS

BY: _____, Deputy
DEPUTY

COUNTY COURT
WILLIAMSON COUNTY TEXAS

BGE, Inc.
101 West Louis Henna Blvd., Suite 400
Austin, Texas 78728
Tel: 512-879-0400 • www.bgeinc.com
TBPELS Registration No. F-1046
TBPELS Licensed Surveying Firm No. 10106502

\\bgeinc\data\TXC\Projects\Green_Brick_Partners\12802-01-Prairie_Winds_Ph-2B\SVA\04_Finals\Drawings\Plat\12802-01_Lidell-Walker_Ph2B.dwg, 12/19/2024 11:22 AM, Matthew Misiak

CITY OF HUTTO
SURVEY CONTROL POINT DESCRIPTION

PROJECT: LIDELL WALKER PHASE 2B

TYPE OF MARK: Brass Disc stamped "CITY OF HUTTO BENCHMARK"

VERTICAL CONTROL DATA			
ELEVATION (Z)	**DATUM**	**ORDER**	**ESTABLISHED BY (FIRM)**
674.28	Texas State Plane Coordinate System, Central Zone 4203, NAD83 NAVD 88, GEIOD 18		BGE, Inc. Project # 11489-02 TBPELS Licensed Surveying Firm No. 10106500

METHOD OF SURVEY:	**DATE OF SURVEY**
GPS OBSERVATIONS	04/28/2026

WRITTEN DESCRIPTION (to include X- and Y- coordinate

Brass Disc stamped "CITY OF HUTTO BENCHMARK" set near the southeast intersection of Wilshire Way (55' R.O.W.) as dedicated by Lidell Walker Phase 2 recorded in Doc. No. 2025006489 and Main Hippo Drive (120' R.O.W.) as dedicated Lidell Walker Phase 2B recorded in Doc. No. 2025006497 both of the Official Public Records of Williamson County, Texas.

GRID Northing 10,185,908.59, GRID Easting 3,176,845.06

LOCATION MAP

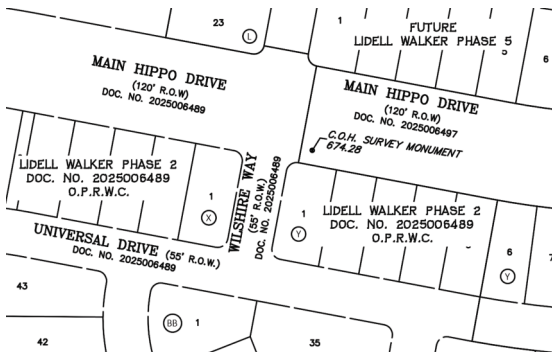

BENCHMARK PHOTO



I, Jonathan Nobles **, do hereby certify the control point information listed above was prepared from and based on an actual on-the-ground survey performed under my direct supervision.**

STATE OF TEXAS
REGISTERED
JONATHAN O. NOBLES
5777
PROFESSIONAL
LAND SURVEYOR

06/29/2026

Signature and Date

AGENDA ITEM REPORT
10.4.

To:	City Council
Subject:	Consideration and possible action on Resolution No. R-2026-177 accepting the infrastructure improvements for private development known as Heritage Mill North Section 1. (Kate Moriarty)
Meeting:	Thursday, September 3, 2026
Department:	Engineering /
Staff Contact:	Kate Moriarty

ITEM SUMMARY:

This project is located in the south-east section of Hutto and consists of infrastructure acceptance of **wastewater and water** construction with the Heritage Mill North Section 1. The final inspection by staff accepts this infrastructure, including supporting documentation. Infrastructure documents include maintenance bonds, cost summary, areas approved and itemized infrastructure.

STAFF RECOMMENDATION:

Staff Recommends Approval

FISCAL NOTES:

No financial impact from acceptance of infrastructure improvements. Engineering has confirmed that maintenance bonds have been received and provided to City Secretary for recordkeeping.

ATTACHMENTS:

1. Map of Area Heritage_Mill_Phase_1
2. Heritage Mill Photo
3. 20260819 Hutto RES Heritage Mill Phase 1
4. 25003_~1
5. ASBUIL~2
6. HERITA~1
7. Image
8. As Built Heritage Mill North 1 Spectrum
9. As Built-Heritage Mill Phase 1 Oncor
10. Final Subdivision Checklist
11. Heritage Mill North Section 1 ECL
12. Heritage Mill PH 1 Construction Summary
13. 06-10-2026-Edward-Hill
14. Heritage Mill Ph 1 TDLR
15. Heritage Mill Phase 1 Maintenance Bond

16. Heritage Sec 1 Recorded Plat
17. NUMBER~1
18. Stamped Water & Wastewater FCQ

Heritage Mill Phase 1





RESOLUTION NO. R-2026-XXX

A RESOLUTION OF THE CITY OF HUTTO, TEXAS, APPROVING INFRASTRUCTURE IMPROVEMENTS FOR THE PROJECT KNOWN AS HERITAGE MILL PHASE 1 IN THE CITY OF HUTTO, WILLIAMSON COUNTY; PROVIDING PROPER NOTICE AND MEETING, AND PROVIDING AN EFFECTIVE DATE.

WHEREAS, the public infrastructure improvements for Heritage Mill Phase 1 project have been constructed and are ready for acceptance; and

WHEREAS, a final inspection was conducted by the City Construction Inspection and Public Works staff on all streets, sidewalks, ramps, drainage, water, and wastewater improvements; and

WHEREAS, Travelers Casualty and Surety Company submitted warranty bonds to cover the material and workmanship for two years.

NOW, THEREFORE, BE IT RESOLVED BY THE CITY COUNCIL OF THE CITY OF HUTTO, TEXAS, THAT:

SECTION 1: The findings set forth in the recitals of this Resolution are hereby found to be true and correct and are hereby adopted as findings of the City Council and are incorporated into the body of this Resolution as if fully set forth herein.

SECTION 2: That the Hutto City Council hereby approves and authorizes the City Manager to accept the infrastructure and enter into a two-year maintenance period.

SECTION 3: The City Council hereby finds and declares that written notice of the date, hour, place and subject of the meeting at which this Resolution was adopted was posted and that such meeting was open to the public as required by law at all times during which this Resolution and the subject matter hereof were discussed, considered and formally acted upon, all as required by the Open Meetings Act, Chapter 551, Texas Government Code, as amended.

SECTION 4: This Resolution shall take effect immediately upon its passage.

PASSED & APPROVED by the CITY COUNCIL of the CITY OF HUTTO, on the 3rd day of September 2026 on vote of __AYES; ___NAYS; __ABSTENTIONS

CITY OF HUTTO, TEXAS

_____
Mike Snyder, Mayor

ATTEST:

_____
Laura Hallmark, City Secretary

STATE OF TEXAS §

COUNTY OF Travis §

ALL BILLS PAID AFFIDAVIT
BY CONTRACTOR

WHEREAS, the undersigned representative of Cash Construction Co., Inc. ("Claimant") furnished materials, equipment, services, labor and/or warranty work reflected in the invoices listed below (collectively, the "Work") under an agreement with Brohn Homes (the "Developer") for development of certain public infrastructure improvements consisting of the items reflected on the invoices listed on **Attachment A** (the "Authorized Improvements"). Such Work being detailed in the invoices listed on **Attachment A** for the benefit of property within the Williamson County Municipal Utility District No. 35 located in City of Hutto, Texas in Williamson County, Texas, and which is referred to herein as the "Project".

WHEREAS, Claimant provided the aforementioned Work in connection with the Project prior to the date of this All Bills Paid Affidavit.

In consideration of Developer's payment for the amounts listed on **Attachment A** of the total sum of $4,041,818 DOLLARS AND 0/100 ($4,041,818.00) (the "Previous Payments Amount"), the sufficiency and receipt of which are hereby acknowledged by Claimant, and in order to induce payment by Developer of future progress payment to Claimant, Claimant warrants and represents that all bills, claims, and liabilities against Claimant or the Project arising out of: (i) any Work provided by or through Claimant to the Project on or before June 25, 2026; and (ii) all items purchased by Claimant in connection with the Project on or before June 25, 2026 have been paid and satisfied by Claimant.

This document shall bind Claimant and its legal representatives, successors and assigns and shall inure to the benefit of the Developer and Developer's legal representatives, successors and assigns. The person signing this document represents that he or she is duly authorized to execute this affidavit on behalf of the Claimant.

IN WITNESS WHEREOF, this instrument is hereby executed as of the 28th day of July, 2026.

Cash Construction Company, Inc.
By: _____
Name: Tyler Simmons
Title: Controller

STATE OF TEXAS §

COUNTY OF Travis §

Before me, a Notary Public, on this day personally appeared Tyler Simmons, known to me to be the person whose name is subscribed to the foregoing instrument and who, being duly sworn, stated that all of the facts herein are true and correct and acknowledged to me that the execution hereof was the act of himself or herself as Controller of Cash Construction Co., Inc., and that he or she has executed the same on behalf of the same for the purposes and consideration herein expressed, and in the capacity herein stated.

MARY CHAVEZ HERRERA
Notary Public, State of Texas
Comm. Expires 09-01-2028
Notary ID 11285245

Mary Chavez Herrera
Notary Public, in and for the State of Texas

Attachment A

Gray Civil, Inc.

Title: Heritage Mill Ph.1 Final Cost & Quantities
Description: Water, and Wastewater
Location: City of Hutto, Williamson County, Texas
Owner: Brohn Homes

Water Improvements

Item	Description	Unit	Quantity	Unit Price	Cost
PH1 - 1	4" PVC C-900 Cl 150 Waterline, Including Appurtenances, All Depths, Per Linear Foot, (Complete and in place) CIP	LF	63	$ 105.00	$ 6,615.00
PH1 - 2	8" PVC C-900 Cl 200 Waterline, Including Appurtenances, All Depths, Per Linear Foot, CIP	LF	4,486	$ 63.00	$ 282,618.00
PH1 - 3	12" PVC C-900 Cl 200 Waterline, Including Appurtenances, All Depths, Per Linear Foot, CIP	LF	984	$ 114.00	$ 112,176.00
PH1 - 4	8" Ductile Iron Waterline, Including Appurtenances, All Depths, Per Linear Foot, CIP	LF	25	$ 273.00	$ 6,825.00
PH1 - 5	18" Steel Encasement, Per Linear Foot, CIP	LF	40	$ 164.00	$ 6,560.00
PH1 - 6	24" Steel Encasement, Per Linear Foot, CIP	LF	34	$ 211.00	$ 7,174.00
PH1 - 7	4" Gate Valve with Box and Cover, Per Each, CIP	EA	1	$ 1,670.00	$ 1,670.00
PH1 - 8	8" Gate Valve with Box and Cover, Per Each, CIP	EA	21	$ 2,570.00	$ 53,970.00
PH1 - 9	12" Gate Valve with Box and Cover, Per Each, CIP	EA	3	$ 4,450.00	$ 13,350.00
PH1 - 10	Automatic Flushing Valve, Per Each, CIP	EA	4	$ 6,190.00	$ 24,760.00
PH1 - 11	1.5" Irrigation Meter, Per Each, CIP	EA	1	$ 2,610.00	$ 2,610.00
PH1 - 12	5/8" Irrigation Meter, Per Each, CIP	EA	3	$ 2,010.00	$ 6,030.00
PH1 - 13	Fire Hydrant Assembly, Per Each, CIP	EA	10	$ 7,780.00	$ 77,800.00
PH1 - 14	Single Water Service, Per Each, CIP	EA	23	$ 1,920.00	$ 44,160.00
PH1 - 15	Double Water Service, Per Each, CIP	EA	54	$ 1,960.00	$ 105,840.00
PH1 - 16	Trench Safety System, Per Linear Foot, CIP	LF	5,558	$ 0.50	$ 2,779.00
PH 1 - CO #01	8" PVC C-900 Cl 200 Waterline, Including Appurtenances, All Depths, Per Linear Foot, CIP	LF	(43)	$ 63.00	$ (2,709.00)
PH 1 - CO #01	8" Ductile Iron Waterline, Including Appurtenances, All Depths, Per Linear Foot, CIP	EA	75	$ 273.00	$ 20,475.00
PH 1 - CO #01	12" Gate Valve with Box and Cover, Per Each, CIP	EA	1	$ 4,450.00	$ 4,450.00
PH 1 - CO #01	Air Release Valve, Per Each, CIP	EA	4	$ 2,850.00	$ 11,400.00
PH 1 - CO #01	16" Steel Encasement, Per Linear Foot, CIP	EA	40	$ 145.00	$ 5,800.00
PH 1 - CO #03	6" Schedule 40 PVC Sleeves, Per Linear Foot, CIP	LF	550	$ 28.00	$ 15,400.00
Com-01	8" PVC C-900 Cl 200 Waterline, Including Appurtenances, All Depths, Per Linear Foot, CIP	LF	733	$ 63.00	$ 46,179.00
Com-02	12" PVC C-900 Cl 200 Waterline, Including Appurtenances, All Depths, Per Linear Foot, CIP	LF	927	$ 114.00	$ 105,678.00
Com-03	Bore 12" Ductile Iron Waterline, Including Pits, encasement pipe, end seals, spacers, etc., Per Linear Foot, CIP	LF	76	$ 856.00	$ 65,056.00
Com-04	18" Steel Encasement, Per Linear Foot, CIP	LF	12	$ 164.00	$ 1,968.00
Com-05	24" Steel Encasement, Per Linear Foot, CIP	LF	20	$ 211.00	$ 4,220.00
Com-06	8" Gate Valve with Box and Cover, Per Each, CIP	EA	5	$ 2,570.00	$ 12,850.00
Com-07	12" Gate Valve with Box and Cover, Per Each, CIP	EA	5	$ 4,450.00	$ 22,250.00
Com-08	Automatic Flushing Valve, Per Each, CIP	EA	1	$ 6,190.00	$ 6,190.00
Com-09	12" Wet Connection, Including Dewatering, Fittings, etc., Per Each, CIP	EA	1	$ 2,710.00	$ 2,710.00
Com-10	Connect to Existing 16", Including Tapping Sleeve, Valve, etc., Per Each, CIP	EA	1	$ 9,630.00	$ 9,630.00
Com-11	Air Release Valve, Per Each, CIP	EA	1	$ 2,850.00	$ 2,850.00
Com-12	Bac-T Sampling Station, Including Concrete Pad, Valves, etc., Per Each, CIP	EA	1	$ 2,340.00	$ 2,340.00
Com-13	Fire Hydrant Assembly, Per Each, CIP	EA	5	$ 7,780.00	$ 38,900.00
Com-14	2" Irrigation Meter, Per Each, CIP	EA	1	$ 2,800.00	$ 2,800.00
Com-15	10" Schedule 40 PVC Sleeves, Per Linear Foot, CIP	LF	61	$ 55.00	$ 3,355.00
Com-16	6" Schedule 40 PVC Sleeves, Per Linear Foot, CIP	LF	658	$ 28.00	$ 18,424.00
Com-17	Trench Safety System, Per Linear Foot, CIP	LF	1,660	$ 0.50	$ 830.00
CO #01	8" PVC C-900 Cl 200 Waterline, Including Appurtenances, All Depths, Per Linear Foot, CIP	LF	(75)	$ 63.00	$ (4,725.00)
CO #01	12" PVC C-900 Cl 200 Waterline, Including Appurtenances, All Depths, Per Linear Foot, CIP	LF	(147)	$ 114.00	$ (16,758.00)
CO #01	8" Ductile Iron Waterline, Including Appurtenances, All Depths, Per Linear Foot, CIP	LF	75	$ 273.00	$ 20,475.00
CO #01	12" Ductile Iron Waterline, Including Appurtenances, All Depths, Per Linear Foot, CIP	LF	125	$ 284.00	$ 35,500.00
CO #01	Fire Hydrant Assembly, Per Each, CIP	EA	1	$ 7,780.00	$ 7,780.00
CO #01	10" Schedule 40 PVC Sleeves, Per Linear Foot, CIP	LF	(61)	$ 55.00	$ (3,355.00)
CO #01	18" Steel Encasement, Per Linear Foot, CIP	LF	61	$ 157.00	$ 9,577.00
CO #06	Drain and Demo 16" Waterline, Per Linear Foot, CIP	LF	60	$ 38.50	$ 2,310.00
CO #06	Reinstall existing 16" PVC Waterline, Per Linear Foot, CIP	LF	60	$ 359.75	$ 21,585.00
CO #06	Drain and Demo 16" Waterline, Per Linear Foot, CIP	LF	330	$ 38.50	$ 12,705.00
CO #06	Reinstall existing 16" PVC Waterline, Per Linear Foot, CIP	LF	330	$ 160.00	$ 52,800.00
CO #06	Spilt Steel Encasement for Existing Waterline, Per Linear Foot, CIP	LF	(40)	$ 447.00	$ (17,880.00)
CO #06	Spilt Casing Material, Per Lump Sum, CIP	LS	1	$ 5,000.00	$ 5,000.00
				WATER IMPROVEMENTS	**$ 1,280,997.00**

Wastewater Improvements

Item	Description	Unit	Quantity	Unit Price	Cost
Ph 1 - 1	8" PVC SDR-26 Wastewater Line (0'-8' Depths), Including Appurtenances, Per Linear Foot, CIP	LF	422	$ 53.00	$ 22,366.00
Ph 1 - 2	8" PVC SDR-26 Wastewater Line (8'-10' Depths), Including Appurtenances, Per Linear Foot, CIP	LF	1,030	$ 64.00	$ 65,920.00
Ph 1 - 3	8" PVC SDR-26 Wastewater Line (10'-12' Depths), Including Appurtenances, Per Linear Foot, CIP	LF	1,076	$ 98.00	$ 105,448.00
Ph 1 - 4	8" PVC SDR-26 Wastewater Line (12'-14' Depths), Including Appurtenances, Per Linear Foot, CIP	LF	156	$ 90.00	$ 14,040.00
Ph 1 - 5	8" PVC SDR-26 Wastewater Line (14'-16' Depths), Including Appurtenances, Per Linear Foot, CIP	LF	640	$ 116.00	$ 74,240.00
Ph 1 - 6	8" PVC SDR-26 Wastewater Line (16'-18' Depths), Including Appurtenances, Per Linear Foot, CIP	LF	204	$ 169.00	$ 34,476.00
Ph 1 - 7	8" PVC 160 Pressure Line (All Depths), Including Appurtenances, Per Linear Foot, CIP	LF	140	$ 120.00	$ 16,800.00
Ph 1 - 8	4' Dia. Standard Wastewater Manhole, Per Each, CIP	EA	12	$ 5,910.00	$ 70,920.00
Ph 1 - 9	4' Dia. Drop Wastewater Manhole, Per Each, CIP	EA	2	$ 7,450.00	$ 14,900.00
Ph 1 - 10	Extra Depth 4' Dia. Manhole Extensions, Per Vertical Linear Foot, CIP	EA	44	$ 270.00	$ 11,880.00
Ph 1 - 11	Single Wastewater Service, All Lengths, Per Each, CIP	EA	21	$ 2,080.00	$ 43,680.00
Ph 1 - 12	Double Wastewater Service, All Lengths, Per Each, CIP	EA	55	$ 2,600.00	$ 143,000.00
Ph 1 - 13	Trench Safety System, Per Linear Foot, CIP	EA	3,688	$ 2.00	$ 7,376.00
PH 1 - CO #03	Extending Wastewater Services, Per Linear Foot, CIP	LF	630	$ 47.00	$ 29,610.00
PH 1 - CO #03	Added Manhole Risers to WWL T & U, Per Lump Sum, CIP	LS	1	$ 3,525.00	$ 3,525.00
COM - 1	8" PVC SDR-26 Wastewater Line (12'-14' Depths), Including Appurtenances, Per Linear Foot, CIP	LF	225	$ 90.00	$ 20,250.00
COM - 2	8" PVC SDR-26 Wastewater Line (14'-16' Depths), Including Appurtenances, Per Linear Foot, CIP	LF	269	$ 116.00	$ 31,204.00
COM - 3	8" PVC SDR-26 Wastewater Line (16'-18' Depths), Including Appurtenances, Per Linear Foot, CIP	LF	20	$ 169.00	$ 3,380.00
COM - 4	8" PVC SDR-26 Wastewater Line (18'-20' Depths), Including Appurtenances, Per Linear Foot, CIP	LF	20	$ 605.00	$ 12,100.00
COM - 5	8" PVC SDR-26 Wastewater Line (20'-22' Depths), Including Appurtenances, Per Linear Foot, CIP	LF	121	$ 204.00	$ 24,684.00
COM - 6	8" PVC 160 Pressure Line (All Depths), Including Appurtenances, Per Linear Foot, CIP	LF	20	$ 120.00	$ 2,400.00
COM - 7	12" PVC SDR-26 Wastewater Line (16'-18' Depths), Including Appurtenances, Per Linear Foot, CIP	LF	623	$ 150.00	$ 93,450.00
COM - 8	12" PVC SDR-26 Wastewater Line (18'-20' Depths), Including Appurtenances, Per Linear Foot, CIP	LF	931	$ 183.00	$ 170,373.00
COM - 9	12" PVC SDR-26 Wastewater Line (20'-22' Depths), Including Appurtenances, Per Linear Foot, CIP	LF	1,779	$ 180.00	$ 320,220.00
COM - 10	12" PVC 160 Pressure Line (All Depths), Including Appurtenances, Per Linear Foot, CIP	LF	60	$ 156.00	$ 9,360.00
COM - 11	15" PVC SDR-26 Wastewater Line (14'-16' Depths), Including Appurtenances, Per Linear Foot, CIP	LF	636	$ 168.00	$ 106,848.00
COM - 12	15" PVC SDR-26 Wastewater Line (16'-18' Depths), Including Appurtenances, Per Linear Foot, CIP	LF	792	$ 179.00	$ 141,768.00
COM - 13	15" PVC SDR-26 Wastewater Line (18'-20' Depths), Including Appurtenances, Per Linear Foot, CIP	LF	431	$ 189.00	$ 81,459.00
COM - 14	15" PVC SDR-26 Wastewater Line (20'-22' Depths), Including Appurtenances, Per Linear Foot, CIP	LF	1,120	$ 248.00	$ 277,760.00
COM - 15	4' Dia. Standard Wastewater Manhole, Per Each, CIP	EA	4	$ 5,910.00	$ 23,640.00
COM - 16	4' Dia. Drop Wastewater Manhole, Per Each, CIP	EA	2	$ 7,450.00	$ 14,900.00
COM - 17	4' Dia. Bolted & Gasketed Wastewater Manhole, Per Each, CIP	EA	6	$ 6,350.00	$ 38,100.00
COM - 18	5' Dia. Standard Wastewater Manhole, Per Each, CIP	EA	1	$ 8,060.00	$ 8,060.00
COM - 19	5' Dia. Bolted & Gasketed Wastewater Manhole, Per Each, CIP	EA	13	$ 8,190.00	$ 106,470.00
COM - 20	5' Dia. Bolted & Gasketed Drop Wastewater Manhole, Per Each, CIP	EA	4	$ 10,000.00	$ 40,000.00
COM - 21	Extra Depth 4' Dia. Manhole Extensions, Per Vertical Linear Foot, CIP	VLF	115	$ 270.00	$ 31,050.00
COM - 22	Extra Depth 5' Dia. Manhole Extensions, Per Vertical Linear Foot, CIP	VLF	232	$ 424.00	$ 98,368.00
COM - 23	Service Stud for Future, Including wyes and "Stack" to Finished Grade, Per Each, CIP	EA	18	$ 1,730.00	$ 31,140.00
COM - 24	Trench Safety System, Per Linear Foot, CIP	LF	7,027	$ 2.00	$ 14,054.00
CO #01	15" PVC SDR-26 Wastewater Line (14'-16' Depths), Including Appurtenances, Per Linear Foot, CIP	LF	8	$ 168.00	$ 1,344.00
CO #01	15" PVC SDR-26 Wastewater Line (16'-18' Depths), Including Appurtenances, Per Linear Foot, CIP	LF	(184)	$ 179.00	$ (32,936.00)
CO #01	15" PVC SDR-26 Wastewater Line (18'-20' Depths), Including Appurtenances, Per Linear Foot, CIP	LF	49	$ 189.00	$ 9,261.00
CO #01	15" PVC SDR-26 Wastewater Line (20'-22' Depths), Including Appurtenances, Per Linear Foot, CIP	LF	81	$ 248.00	$ 20,088.00
CO #01	15" PVC SDR-26 Wastewater Line (22'-24' Depths), Including Appurtenances, Per Linear Foot, CIP	LF	46	$ 295.00	$ 13,570.00
CO #01	Extra Depth 4' Dia. Manhole Extensions, Per Vertical Linear Foot, CIP	LF	4	$ 270.00	$ 1,080.00
CO #01 - ADD/ALT	Bore 12" Wastewater Line, Per Lump Sum, CIP	LS	110	$ 741.00	$ 81,510.00
CO #01 - ADD/ALT	Protect Gas Easement Crossing - Special Timber mats - (exclude silt fence), Per Linear Foot, CIP	LS	1	$ 120,000.00	$ 120,000.00
CO #02	Bore 12" WWL (20'-22') Wastewater Line, Per Linear Foot, CIP	LF	350	$ 731.00	$ 255,850.00
CO #02	12" PVC SDR-26 Wastewater Line (20'-22' Depths), Including Appurtenances, Per Linear Foot, CIP	LF	(350)	$ 180.00	$ (63,000.00)
CO #06	Relocate 8" Wastewater Line (Including cutting, capping and coring new hole), Per Linear Foot, CIP	LF	80	$ 121.00	$ 9,680.00
CO #06	Support Forcemain with Bracing & Restraints, Per Lump Sum, CIP	LS	1	$ 10,580.00	$ 10,580.00
CO #06	Relocate Existing Forcemain, Per Each, CIP	EA	(1)	$ 59,000.00	$ (59,000.00)
CO #08	Bedding for Ground Water Remediation (with Filter Fabric), Per Linear Foot, CIP	LF	395	$ 85.00	$ 33,575.00
				WASTEWATER IMPROVEMENTS	$ 2,760,821.00

TOTAL FOR ALL IMPROVEMENTS	$ 4,041,818.00

Maintenance Bond Holder	Percent	Duration	Bond Amount
City of Hutto	100%	2 Years	$ 4,041,818.00



6-19-26

FOR CONSTRUCTION – Oncor Requirements

- Materials & workmanship must be installed per Oncor specifications and be inspected by Oncor Electric Delivery prior to any coverup.
- Contact Agustin Estrada (806.392.1722) or Phillip Redman (254.541.3619) for inspections.
- A minimum twenty-four (24) hour notice is needed for scheduling inspections.
- All applicable Easements, DIP/WAS Agreements, Streetlight Agreements and Facility Extension Agreements must be secure prior to approval of project and ordering material.

FEEDER: HUTTO2723
PRIMARY VOLTAGE: 24.9KV/14.4KV
PROTECTIVE DEVICE: Trip Saver
FLN: 3772196-2773598
OFFSITE WO: N/A
NJUNS: N/A
PERMIT(S): No

NUMBER OF LOTS: 130
HANDHOLE OR PEDESTAL: Pedestal
NUMBER OF STREETLIGHTS: 11
SOIL CONDITION: Chunk Rock

TRANSFORMER AND PADS: TYPE I
PRIMARY: 1/0AL
SECONDARY: 350kcmil TPX UG
SERVICES: 1/0AL TPX
SERVICE LENGTH: 50FT
STREETLIGHT LUMINAIRE: 55W LED
STREETLIGHT STANDARD: Cobra Head Galvanized
STREETLIGHT ESID: 1137227
STREETLIGHT ENTITY: City of Hutto
STREETLIGHT CONDUCTOR: #6 DPX



DocuSigned by:
Ryan McBee
President
DUCT
08/05/2024 | 6:14:50 AM CDT

Signed by:

DESIGN CONCURRENCE
[x] APPROVED AS DESIGNED DATE: 08/02/2024 | 11:13:33 AM CDT
[ ] CHANGES AS REQUESTED DATE:
NAME: Hannah Burton
TITLE: Land Development Project Manager

CROSSING SLEEVE INFORMATION

ONCOR Conduit

1 IN.	REQUIRES	2 IN. SLEEVE
2 IN.	REQUIRES	4 IN. SLEEVE
3 IN.	REQUIRES	6 IN. SLEEVE
4 IN.	REQUIRES	6 IN. SLEEVE
6 IN.	REQUIRES	10 IN. SLEEVE

If crossing sleeves are to be installed place sleeves at all street crossing, and any other location where open trenching might be hindered.

ELECTRICAL FACILITIES LEGEND

- SECONDARY BOX
- STREET LIGHT
- TRANSFORMER PAD
- SWITCHGEAR PAD
- PULL BOX
- EXISTING ONCOR POLE
- PROPOSED ONCOR POLE
- DOWNGUY
- OVERHEAD TRANSFORMER

PRIMARY CONDUIT	SIZE	SECONDARY CONDUIT
	1 IN.	
	2 IN.	
	3 IN	
	4 IN.	
	6 IN.	

EASEMENT LINE

PHASE DIVISION

ONCOR ELECTRIC DELIVERY

DISTRIBUTION PROJECT MANAGEMENT AND DESIGN SERVICES

PROJ. NAME : Heritage Mill North Section 1
LOCATION : Hutto, Williamson
PROJ. MGR. : Lauren Simpson
DESIGNER : Lauren Gomez
WO # : 23996457
PLOT SCALE : Not To Scale

REV: 7/30/2024
DATE: 5/2/2024

Heritage Mill Ph. 1 punchlist

05/18/2026 / Edward Hill

Complete

Score	1 / 7 (14.29%)	Flagged items	0	Actions	0

Conducted on 05/18/2026 8:35 AM CDT

Gen Note. All auto flush valves need meters and boxes

Needs valve extension @ Heritage Mill & Bison Prairie 5+53

Pulpwoid & Heritage Mill
WL 18+50

FH needs 6” ext. valves need as well

Manifesto @ crown wheel

7+30 WL E - all valves need extension

5+40 WL c. Outhaul @ crown wheel

All FH & valves need adjust Heritage Mill @ Outhaul

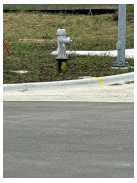
Photo 1



Photo 2



Photo 3



Photo 4

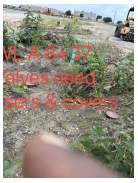
Photo 5


Photo 6



Photo 7



Photo 8


Photo 9

Prepared by Edward Hill

Inspection	1 / 7 (14.29%)
Project	
Name of project	
Who is the contractor?	
Proposed Completion Date	
NTP Date	
	0°F Should be between 1°F to 200°F
Weather	Clear
Site conditions	Clear
Day	Monday
Site Visit	
Condition of erosion controls	Construction entrance is in good condition
Number of requested rain days	
Significant event	
Any conversations that needed to be documented	
Number of people onsite	

Media summary



Photo 1

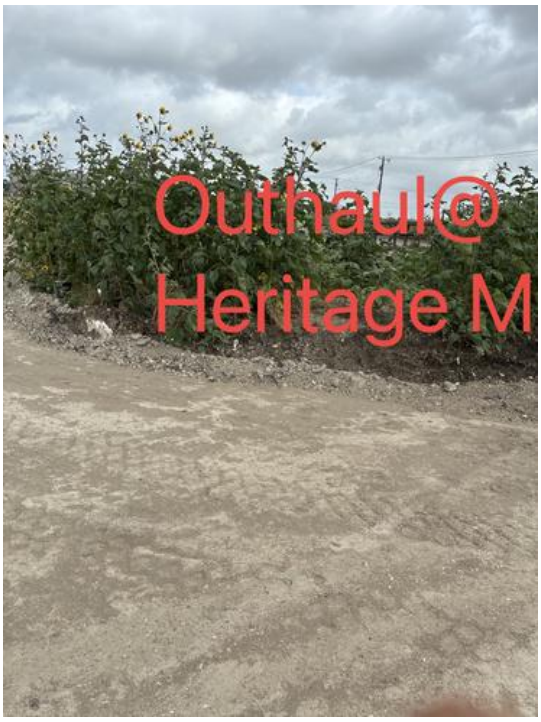

Photo 2



Photo 3



Photo 4



Photo 5



Photo 6



Photo 7



Photo 8



Photo 9


WILLIAMSON COUNTY
MUNICIPAL UTILITY
DISTRIC NO 35
SPEED
LIMIT
30
WL-A
Sta. 2+24
After
adjustment



NOT APPROVED FOR CONSTRUCTION

Charter Spectrum

APPROXIMATE JOINT TRENCH FOOTAGE:	9199'	DATE:	REVISIONS		LOCATION:	HERITAGE MILL / HUTTO	
APPROX SEC JOINT TRENCH FOOTAGE:	4652'	2/6/25	DESCRIPTION		ZONE/SYSTEM	ZONE NA / AUSTIN	
APPROX NON-JOINT TRENCH FOOTAGE:	230'		Heritage Mill North Section 1		DESIGNED BY:	GG	DATE: 2/10/25
1.25" CONDUIT:	7700'		PID: 20010488		# OF UNITS:	150	THOMAS GUIDE #:
2" CONDUIT:	7433'				PROJECT#:		SHEET: 1 of: 1
3" CONDUIT:	0'				MAP#:		TRACTS/DESCRIPTION: 20010488 Heritage Mill North Section 1
APPROXIMATE AERIAL FOOTAGE:	0'				SCALE:	NTS	

FOR CONSTRUCTION -- Oncor Requirements

- Materials & workmanship must be installed per Oncor specifications and be inspected by Oncor Electric Delivery prior to any coverup.
- Contact Agustin Estrada (806.392.1722) or Philip Redman (254.541.3619) for inspections.
- A minimum twenty-four (24) hour notice is needed for scheduling inspections.
- All applicable Easements, DIP/WAS Agreements, Streetlight Agreements and Facility Extension Agreements must be secure prior to approval of project and ordering of material.

FEEDER: HUTTO2723
PRIMARY VOLTAGE: 24.9KV/14.4KV
PROTECTIVE DEVICE: Trip Saver
FLN: 3772196-2773598
OFFSITE WO: N/A
NJUNS: N/A
PERMIT(S): No

NUMBER OF LOTS: 130
HANDHOLE OR PEDESTAL: Pedestal
NUMBER OF STREETLIGHTS: 11
SOIL CONDITION: Chunk Rock

TRANSFORMER AND PADS: TYPE I
PRIMARY: 1/0AL
SECONDARY: 350kcmil TPX UG
SERVICES: 1/0AL TPX
SERVICE LENGTH: 50FT
STREETLIGHT LUMINAIRE: 55W LED
STREETLIGHT STANDARD: Cobra Head Galvanized
STREETLIGHT ESID: 1137227
STREETLIGHT ENTITY: City of Hutto
STREETLIGHT CONDUCTOR: #6 DPX



DocuSigned by:
BC4FFCA4F27B4BD...
Ryan McBee
President
DUCT
08/05/2024 | 6:14:50 AM CDT

Signed by:
Hannah Burton
885E425250BB4AC...

DESIGN CONCURRENCE

[X] APPROVED AS DESIGNED DATE: 08/02/2024 | 11:13:33 AM CDT

[ ] CHANGES AS REQUESTED DATE: _____

NAME: Hannah Burton

TITLE: Land Development Project Manager

CROSSING SLEEVE INFORMATION

ONCOR Conduit

1 IN.	REQUIRES	2 IN. SLEEVE
2 IN.	REQUIRES	4 IN. SLEEVE
3 IN.	REQUIRES	6 IN. SLEEVE
4 IN.	REQUIRES	6 IN. SLEEVE
6 IN.	REQUIRES	10 IN. SLEEVE

If crossing sleeves are to be installed place sleeves at all street crossing, and any other location where open trenching might be hindered.

ELECTRICAL FACILITIES LEGEND

- SECONDARY BOX
- STREET LIGHT
- TRANSFORMER PAD
- SWITCHGEAR PAD
- PULL BOX
- EXISTING ONCOR POLE
- PROPOSED ONCOR POLE
- DOWNGUY
- OVERHEAD TRANSFORMER

PRIMARY CONDUIT	SIZE	SECONDARY CONDUIT
	1 IN.	
	2 IN.	
	3 IN	
	4 IN.	
	6 IN.	

EASEMENT LINE

PHASE DIVISION

ONCOR ELECTRIC DELIVERY

DISTRIBUTION PROJECT MANAGEMENT AND DESIGN SERVICES

PROJ. NAME : Heritage Mill North Section 1

LOCATION : Hutto, Williamson

PROJ. MGR. : Lauren Simpson

DESIGNER : Lauren Gomez

WO # : 23996457

PLOT SCALE : Not To Scale

REV: 7/30/2024
DATE: 5/2/2024

FINAL SUBDIVISION / SITE PROJECT CHECKLIST

Date: 6-26-26

Name of Project: Heritage Mill PH.1 & Brushy Creek 48" Interceptor Project
Conditional / Final Acceptance Date: _____

Inspector's Name: _____Ed Hill_____ Job Number(s): _____

Note: All spaces need to be initialed by Inspector including N/A.

EH 1. Project Construction Summary Date Received:6-25-26_ _____

__EH__2. Engineer's Concurrence Letter Date: 7-26-26 Received: _____

_EH__3. Maintenance Bond(s) Date:7-26-26 Received: _____

_EH_ 4. Final Cost & Quantities signed & sealed by engineer Date:6-25-26 Received: _____

___EH 5. As-built Reproducible Plans Date: 6-25-26 Received: _____

(1-24"X36", pdf scan, ACAD Base Map files< Shape File .SHP)

_EH___6. TDLR Inspection Report Received: 7-28-26

_____ EH 7. Test Reports

_____ Manhole Test
_____ TV Test
_____ Bacteriological Test
_____ WW Low Air Pressure Test / Mandrel Test
_____ Valve & Hydrant Test
_____ Water Pressure Test

___EH_ 8. Punch List Date Completed:___6-25-26_____

___EH_ 9. No. of Lots for Subdivisions 142_____ Total Acres in Subdivision. __38.163_____
__EH__ 10. Plans showing the location of installed all Dry Utilities. (Electric, Gas and communication lines)

____EH 11. Location and elevation of Benchmark from RPLS

__EH_ 12. Map showing Area being accepted.

__EH___ 13. Affidavit of all bills paid Received: 7-28-26

Comments: _____

_____

Please initial: ___EH_____ Inspector, Supervisor, _____TM_____

GRAY

July 14, 2026

Katie Moriarty
City of Hutto
500 W Live Oak Street
Hutto, Texas 78654

Re: Heritage Mill North Section One
Engineering Concurrence Letter
GC No. 1636-11739

Dear Edward,

Please find this letter as our formal engineering concurrence for the above-referenced project. On July 14, 2026, I, the undersigned Professional Engineer in the State of Texas, or my representative, made a final visual inspection of Heritage Mill North Section One construction project certifying it was at least 95% complete. This inspection represented the culmination of multiple site visits conducted by Gray Civil, Inc., singly as well as joint site visit(s) conducted with the City of Hutto staff accompanied by Contractor personnel. The conclusion drawn from this final inspection and those site visits conducted during construction is that the construction project has been constructed in general compliance with approved plans, specifications, and requirements of associated regulatory permits. I, therefore, recommend acceptance of this project by the City of Hutto.

Revegetation of areas disturbed in this construction project remain in progress with appropriate erosion controls in place to minimize erosive potential during the grow-in period.

Sincerely,

GRAY CIVIL, INC.

STATE OF TEXAS
SCOTT A. SWIDERSKI
94338
LICENSED
PROFESSIONAL ENGINEER
7-14-26

Scott Swiderski, P.E.
Manager, Construction Services

cc: Richard Pham, P.E.; BGE, Inc.

PROJECT CONSTRUCTION SUMMARY

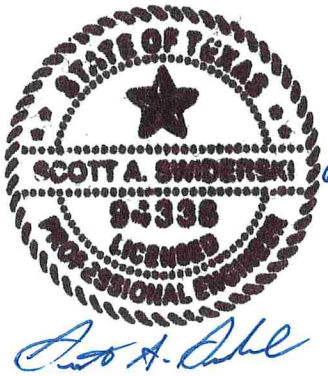

PROJECT NAME: Heritage Mill North Section 1

FINAL ACCEPTANCE DATE: _____

INSPECTOR: Edward Hill

CONTRACTOR: Cash Construction Company, Inc.

Maintained By:	
COH	Other
Boxes checked by COH	

CONSTRUCTION COSTS

STREET IMPROVEMENT COST: N/A

SIDEWALK IMPROVEMENT COST: N/A

SIDEWALK RAMP IMPROVEMENT COST: N/A

BRIDGE IMPROVEMENT COST: N/A

POND(S) COST: N/A

DRAINAGE IMPROVEMENT COST: N/A

WATER IMPROVEMENT COST: $ 1,280,997.00

WASTEWATER IMPROVEMENT COST: $ 2,760,821.00

RESTORATION COST: N/A

TOTAL IMPROVEMENT COST: $ 4,041,818.00

PREPARED BY (DESIGN ENGINEER): Scott Swiderski

CHECKED BY (CITY INSPECTOR): Edward Hill Digitally signed by Edward Hill DN: C=US, E=edward.hill@huttotx.gov, O=City of Hutto, OU=Engineering, CN=Edward Hill Date: 2026.07.28 10:42:49 -05'00' 07/28/2026

CONSTRUCTION SUMMARY FOR STREETS & SIDEWALKS

STREET PAVING							
STREET NAME	Address from	Address to	Pavement Design (Thickness) Asphalt / Base	Pavement Width (FT) (foc-foc)	L (FT)	PRIVATE	ETJ

SIDEWALKS / SIDEWALK RAMPS						
STREET NAME	Address from	Address to	W (FT)	L (FT)	SIDES [1]	CURB RAMP [2]

1 – Designates location of existing sidewalk (E, W, S, N, SE, SW, NE, NW of designated street)
2 – Number of Ramps

CONSTRUCTION SUMMARY FOR BRIDGES

BRIDGES / BRIDGE CLASS CULVERTS / DRAINAGE CULVERTS ACROSS ROW								
STREET NAME AND ADDRESS OR LOCATION	FEATURE CROSSED [1]	TYPE [2]	DESCRIPTION [3]	DECK		COST	PRIVATE	ETJ
				W (FT) [4]	L (FT) [5]			
N/A								

1 – Feature Crossed: Creek name if major creek or branch, or roadway name if overpass.

2 – Type: B – Bridge, C - Culvert, P – Pipe. All crossings 20’ and wider including multiple box culverts totaling 20’ or wider shall be classified as a B – Bridge. Culverts are precast of cast-in-place box culverts. Pipes are smaller drainage pipe crossings with or without headwalls.

3 – Description: i.e. 2 spans (Bridge), 2 – 5 X 7’ (Culverts), 2 – 24” RCP (Pipes).

4 – Deck Width: Use “footprint” of culvert/pipes for width on buried culvert/pipes; include full “out to out” dimension including sidewalks/railings for width of standard bridges.

5 – Deck Length: Measured along the centerline of the roadway

CONSTRUCTION SUMMARY FOR PONDS

PONDS						
POND TYPE [1]	LOCATION (ADDRESS OR LOT / BLOCK #)	SIZE (SY) [2]	DRAINAGE AREA (ACRES)	PRIVATE [3]	ETJ	COST
N/A						

1 – BD = Bio–Detention
D = Detention Only
DSF = Detention / Sedimentation / Filtration
F = Filtration Only
S = Sedimentation Only
SF = Sedimentation / Filtration
SFI = Sedimentation / Filtration / Infiltration
SI = Sedimentation / Irrigation
WP = Wet Pond

2 – Approximate boundary area

3 – Provide copy of recorded agreement for privately maintained ponds

CONSTRUCTION SUMMARY FOR DRAINAGE

STORM DRAIN			MANHOLES			INLETS		
SIZE (IN)	MATERIAL TYPE	L (FT)	QTY	SIZE (Dia – FT)	MATERIAL TYPE	QTY	SIZE (L – FT)	TYPE [1]

JUNCTION BOXES			OUTFALL STRUCTURES		
QTY	SIZE (FT x FT x FT)	MATERIAL TYPE [2]	QTY	SIZE [3]	DESCRIPTION [4]
N/A					

CHANNEL			
LENGTH (FT)	BOTTOM WIDTH (FT)	SIDE SLOPE (FT/FT)	LINING MATERIAL TYPE

1) Grate, Area, Curb, Recessed Curb, Combination, Slotted Drain
2) Cast-in-Place, Precast
3) Pipe size / Culvert Size

4) Headwall, Wing Walls, Gabions

CONSTRUCTION SUMMARY FOR WATER

VALVES INSTALLED			PIPE			FIRE HYDRANTS		
SIZE	DESCRIPTION	NO.	SIZE	TYPE	LENGTH	SIZE	TYPE	NO.
4”	Gate Valve	1	4”	PVC C-900 Cl 150	63 LF	5 1/4”	Dry Barrel, Traffic Model, 250 psi	16
8”	Gate Valve	26	8”	PVC C-900 Cl 200	5,101 LF			
12”	Gate Valve	9	12”	PVC C-900 Cl 200	1,764 LF			
2”	Auto Flush Valve	5						
			8”	Ductile	175 LF			
			12”	Ductile	201 LF			

AIR RELEASE		
SIZE	TYPE	NO.
2”	Automatic	5

SERVICES INSTALLED	
NO.	TYPE
23	Single
54	Double
5	Irrigation

REMARKS:

CONSTRUCTION SUMMARY FOR WASTEWATER

PIPE			MANHOLES					
SIZE	TYPE	LENGTH	DEPTH	MAKE	STA. NO.	B.C.	EYE	STREET
8”	PVC SDR-26	4,183 LF	23’	Precast	2+97.40	Yes	2	N/A
8”	PVC 160 PSI	160 LF	18’	Precast	5+01.45	Yes	3	N/A
12”	PVC SDR-26	3,333 LF	18’	Precast	5+82.16	Yes	3	N/A
12”	PVC 160 PSI	60 LF	18’	Precast	8+19.83	Yes	2	N/A
15”	PVC SDR-26	2,979 LF	18’	Precast	9+26.25	Yes	2	N/A
			19’	Precast	10+88.81	Yes	3	N/A
			16’	Precast	13+78.81	Yes	3	N/A
			17’	Precast	16+78.81	Yes	3	N/A
			20’	Precast	19+58.81	Yes	3	N/A
			23’	Precast	21+54.24	Yes	2	N/A
			22’	Precast	23+95.56	Yes	2	N/A
			21’	Precast	27+79.59	Yes	2	N/A
			21’	Precast	30+99.28	Yes	3	N/A
			21’	Precast	33+56.04	Yes	2	N/A
			21’	Precast	34+83.77	Yes	2	N/A
SERVICES INSTALLED			21’	Precast	38+69.08	Yes	2	N/A

NO.	**TYPE – S / D**
21	Single
55	Double

TYPE OF MANHOLE COATING: SprayRoq SprayWall High Build Epoxy

REMARKS:

18 Service Stubs for Future, Including Wyes and “Stack” to Finished Grade.

CONSTRUCTION SUMMARY FOR WASTEWATER CONTINUED

PIPE			MANHOLES					
SIZE	TYPE	LENGTH	DEPTH	MAKE	STA. NO.	B.C.	EYE	STREET
			21’	Precast	40+13.10	Yes	3	N/A
			21’	Precast	41+23.47	Yes	2	N/A
			21’	Precast	42+35.59	Yes	3	N/A
			21’	Precast	45+14.35	Yes	3	N/A
			21’	Precast	48+09.35	Yes	3	N/A
			21’	Precast	51+48.36	Yes	3	N/A
			19’	Precast	52+62.33	Yes	2	N/A
			19’	Precast	54+53.57	No	3	Manifest Road
			20’	Precast	56+92.91	No	2	Manifest Road
			19’	Precast	57+92.36	No	3	Manifest Road and Heritage Mill Blvd.
			17’	Precast	61+23.92	No	2	Heritage Mill Blvd.
			17’	Precast	64+52.42	No	3	Heritage Mill Blvd.
			15’	Precast	66+86.99	No	2	Heritage Mill Blvd.
			15’	Precast	68+01.02	No	3	Heritage Mill Blvd.
			11’	Precast	3+73.86	No	1	Outhaul Drive
SERVICES INSTALLED			10’	Precast	8+01.56	No	2	Outhaul Drive
NO.	**TYPE – S / D**		**TYPE OF MANHOLE COATING: SprayRoq SprayWall High Build Epoxy**					

REMARKS:

CONSTRUCTION SUMMARY FOR WASTEWATER CONTINUED

PIPE			MANHOLES					
SIZE	TYPE	LENGTH	DEPTH	MAKE	STA. NO.	B.C.	EYE	STREET
			8’	Precast	2+45.64	No	1	Outhaul Drive
			11’	Precast	4+73.06	No	2	Crown Wheel Place
			17’	Precast	3+23.96	No	3	Manifest Road and Windrow Run
			11’	Precast	6+18.96	No	3	Pulpwood Drive and Windrow Run
			10’	Precast	9+13.96	No	3	Bison Prairie Road and Windrow
			8’	Precast	12+74.00	No	1	Windrow Run
			15’	Precast	4+31.49	No	2	Windrow Run
			15’	Precast	7+60.00	No	2	Outhaul Drive and Windrow Run
			9’	Precast	8+69.34	No	1	Outhaul Drive
			10’	Precast	3+51.89	No	2	Bison Prairie Road
			8’	Precast	4+91.71	No	1	Bison Prairie Road
			10’	Precast	2+80.28	No	1	Pulpwood Drive
SERVICES INSTALLED								
NO.	**TYPE – S / D**		**TYPE OF MANHOLE COATING: SprayRoq SprayWall High Build Epoxy**					

REMARKS:

LIMITS OF CONSTRUCTION FOR WATER/WASTEWATER PROJECTS ONLY

PROJECT NAME Heritage Mill North Section 1 WORK ORDER #_____

W/WW JOB I.D. _____ SUBDIVISION FILE # _____

LIMITS OF PROJECT WILL BE GIVEN BY ADDRESS OF STREETS LISTED BELOW

STREET NAME	FROM	TO
Whipsaw Drive	STA 0+98.4	STA 3+32.76
Windrow Run	STA 1+00.00	STA 17+38.29
Outhaul Drive	STA 1+00.00	STA 8+14.75
Crown Wheel Place	STA 1+00.00	STA 7+92.37
Heritage Mill Blvd.	STA 1+56.35	STA 20+47.47
Manifest Road	STA 1+00.00	STA 7+98.92
Pulpwood Drive	STA 1+00.00	STA 3+92.81
Bison Prairie Road	STA 1+00.00	STA 5+84.99

THIS SHEET MUST BE USED WHEN THERE IS NOT A STREET AND DRAINAGE SUMMARY INCLUDED.

Heritage Mill Ph. 1 punchlist

06/10/2026 / Edward Hill

Incomplete

Score	0 / 7 (0%)	Flagged items	0	Actions	0

Conducted on 06/10/2026 3:42 PM CDT



Photo 1



Photo 2

Prepared by Edward Hill

Inspection	0 / 7 (0%)
Project	
Name of project	
Who is the contractor?	
Proposed Completion Date	
NTP Date	
	0°F Should be between 1°F to 200°F
Weather	
Site conditions	
Day	
Site Visit	
Condition of erosion controls	
Number of requested rain days	
Significant event	
Any conversations that needed to be documented	
Number of people onsite	

Media summary



Photo 1



Photo 2

July 28, 2026

CLIENT:
Brohn Homes
6720 Vaught Ranch Rd., Suite 200
Austin, TX 78730

PROJECT:
Heritage Mill Phase 1
Hutto, TX
Contour Project No: 25-217

REGISTERED ACCESSIBILITY SPECIALIST:
Andrea LaCour, RAS #1313
Co-Founder



INSPECTION COMPLETED – NO VIOLATIONS

To Whom It May Concern:

This report presents the findings of the on-site inspection for the **Heritage Mill Phase 1** Project for compliance with the Texas Accessibility Standards. This report is limited to inspecting the elements for compliance with the applicable technical standards and not scoping. An inspection of the site was conducted on July 28, 2026 which included the review of sidewalks, curb ramps and associated crosswalks within the phase.

All of the pedestrian elements were found to be in compliance with the Texas Accessibility Standards. The scope of work is limited to the inspection of the elements and excludes project registration with TDLR and a formal plan review of the design documents.

This determination is applicable only to ensuring compliance with Texas Government Code, Chapter 469 and does not address the requirements of the Americans with Disabilities Act (ADA), (P.L. 101-336), or any other federal, state, or local requirement.

If you have any questions, contact Andrea LaCour at (360) 631-1718 or Andrea@Contour-Collective.com.

Sincerely,

Andrea LaCour, RAS #1313

CITY OF HUTTO
MAINTENANCE BOND
BOND No. 108524352

THE STATE OF TEXAS §
§
COUNTY OF WILLIAMSON §

KNOW ALL MEN BY THESE PRESENTS,

That, Cash Construction Company, Inc., a [corporation, limited partnership, etc.] having a principal place of business at 217 Kingston Lacy Blvd., Pflugerville, TX 78660, as Principal and Travelers Casualty and Surety Company, a corporation authorized to issue surety bonds in the State of Texas, and having an office and place of business in ~~Texas~~ Connecticut at One Tower Square, Hartford, CT 06183, as Surety, are held and firmly bound unto the CITY OF HUTTO, TEXAS, a home-rule municipal corporation organized under the laws of the State of Texas with principal administrative offices at Hutto City Hall, 500 West Live Oak Street, Hutto, Texas 78634 in Williamson County, Texas, as Obligee, in the sum of Four Million Forty One Thousand Eight Hundred Eighteen and 00/100 DOLLARS ($4,041,818.00) lawful money of the United States, for the payment whereof to the Obligee, the Principal and the Surety bind themselves, their heirs, executors, administrators, successors, and assigns, jointly and severally, firmly to these presents:

WHEREAS, Principal is responsible for the completion of Streets, Drainage, Water & Wastewater Improvements located at Heritage Mill North, Section 1 in Williamson County, Texas (the "Work"), [as per the map or plat thereof recorded in _____ of the Deed Records of Williamson County, Texas under Williamson County Clerk File Number and ;][under a certain contract between Principal and Obligee for said Work approved by the Hutto City Council by the attached Resolution;

WHEREAS, Principal has certified in writing to Obligee that all required Work has been completed in accordance with the approved construction plans and Obligee's applicable standards and specifications;

WHEREAS, Principal has requested that the City of Hutto, Texas acknowledge completion and acceptance of the Work as provided by the Code of Ordinances of the City of Hutto, Texas, the issuance of such certificate being subject to the requirement that Principal shall correct all defects within publicly dedicated improvements and Work done for the benefit of Obligee that occur within two (2) years of the date of the acceptance of the Work;

WHEREAS, under the terms of the specifications for the Work, Principal is required to give a bond equal to ~~[percentage of bond]~~100 % of the amount of the contract to protect the Obligee against the result of faulty materials or workmanship for a period of 24 months after acceptance of the Work; and

WHEREAS, this Bond is intended as satisfying that bonding obligation of Principal to Obligee.

NOW, THEREFORE, THE CONDITION OF THIS OBLIGATION is such that if the above-

named Principal shall correct any defects to the Work within 2 years from the date of the issuance of the above-described certificate of completion, then this obligation is to be void; otherwise, to remain in full force and effect.

It is hereby understood and agreed that if Principal shall fail to correct any defects in the required improvements as required by such ordinances and regulations, then the [Planning Commission of the City of Hutto, Texas][the Obligee] may thereupon declare this bond to be in default and collect the sum remaining payable thereunder and upon receipt of the proceeds thereof, the Obligee may install or repair such improvements as are covered by this bond.

IN WITNESS WHEREOF, the said Principal and Surety have signed and sealed this instrument this 3rd **day of** August **20**26.

Cash Construction Company, Inc.,
Principal

By: 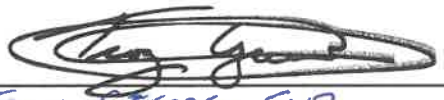
Title: TROY GJERDE, SVP
Address: 217 Kingston Lacy Blvd.
Pflugerville, TX 78660

Travelers Casualty and Surety Company
Surety

By: 
Title: Kimberly Fitzgerald, Attorney-in-Fact
Address: One Tower Square
Hartford, CT 06183

The name and address of the Resident Agent of Surety in ~~Williamson~~ Dallas County, Texas, is:
Marsh USA, LLC
1717 Main Street, STE 4400, Dallas, TX 75201

TRAVELERS

Travelers Casualty and Surety Company of America
Travelers Casualty and Surety Company
St. Paul Fire and Marine Insurance Company
Farmington Casualty Company

POWER OF ATTORNEY

Travelers Casualty and Surety Company of America, Travelers Casualty and Surety Company, St. Paul Fire and Marine Insurance Company, and Farmington Casualty Company are corporations duly organized under the laws of the State of Connecticut (herein collectively called the "Companies"), and the Companies do hereby make, constitute and appoint Kimberly Fitzgerald of Hartford , Connecticut , their true and lawful Attorney(s)-in-Fact to sign, execute, seal and acknowledge any and all bonds, recognizances, conditional undertakings and other writings obligatory in the nature thereof on behalf of the Companies in their business of guaranteeing the fidelity of persons, guaranteeing the performance of contracts and executing or guaranteeing bonds and undertakings required or permitted in any actions or proceedings allowed by law.

IN WITNESS WHEREOF, the Companies have caused this instrument to be signed, and their corporate seals to be hereto affixed, this **13th** day of **May, 2026.**

SEAL SEAL SEAL SEAL

State of Connecticut

By: _____
Bryce Grissom, Senior Vice President

City of Hartford ss.

On this the **13th** day of **May, 2026**, before me personally appeared **Bryce Grissom**, who acknowledged himself to be the Senior Vice President, Surety, Bond & Specialty Insurance, of each of the Companies, and that he, as such, being authorized so to do, executed the foregoing instrument for the purposes therein contained by signing on behalf of said Companies by himself as a duly authorized officer.

IN WITNESS WHEREOF, I hereunto set my hand and official seal.

My Commission expires the **31st** day of **March, 2031**

MARIE E. SORENSEN NOTARY PUBLIC CONNECTICUT

_____
Marie E. Sorensen, Notary Public

This Power of Attorney is granted under and by the authority of the following resolutions adopted by the Boards of Directors of each of the Companies, which resolutions are now in full force and effect, reading as follows:

RESOLVED, that the Chairman, the President, any Vice Chairman, any Executive Vice President, any Senior Vice President, any Vice President, any Second Vice President, the Treasurer, any Assistant Treasurer, the Corporate Secretary or any Assistant Secretary may appoint Attorneys-in-Fact and Agents to act for and on behalf of the Company and may give such appointee such authority as his or her certificate of authority may prescribe to sign with the Company's name and seal with the Company's seal bonds, recognizances, contracts of indemnity, and other writings obligatory in the nature of a bond, recognizance, or conditional undertaking, and any of said officers or the Board of Directors at any time may remove any such appointee and revoke the power given him or her; and it is

FURTHER RESOLVED, that the Chairman, the President, any Vice Chairman, any Executive Vice President, any Senior Vice President or any Vice President may delegate all or any part of the foregoing authority to one or more officers or employees of this Company, provided that each such delegation is in writing and a copy thereof is filed in the office of the Secretary; and it is

FURTHER RESOLVED, that any bond, recognizance, contract of indemnity, or writing obligatory in the nature of a bond, recognizance, or conditional undertaking shall be valid and binding upon the Company when (a) signed by the President, any Vice Chairman, any Executive Vice President, any Senior Vice President or any Vice President, any Second Vice President, the Treasurer, any Assistant Treasurer, the Corporate Secretary or any Assistant Secretary and duly attested and sealed with the Company's seal by a Secretary or Assistant Secretary; or (b) duly executed (under seal, if required) by one or more Attorneys-in-Fact and Agents pursuant to the power prescribed in his or her certificate or their certificates of authority or by one or more Company officers pursuant to a written delegation of authority; and it is

FURTHER RESOLVED, that the signature of each of the following officers: President, any Executive Vice President, any Senior Vice President, any Vice President, any Assistant Vice President, any Secretary, any Assistant Secretary, and the seal of the Company may be affixed by facsimile to any Power of Attorney or to any certificate relating thereto appointing Resident Vice Presidents, Resident Assistant Secretaries or Attorneys-in-Fact for purposes only of executing and attesting bonds and undertakings and other writings obligatory in the nature thereof, and any such Power of Attorney or certificate bearing such facsimile signature or facsimile seal shall be valid and binding upon the Company and any such power so executed and certified by such facsimile signature and facsimile seal shall be valid and binding on the Company in the future with respect to any bond or understanding to which it is attached.

I, **Kevin E. Hughes**, the undersigned, Assistant Secretary of each of the Companies, do hereby certify that the above and foregoing is a true and correct copy of the Power of Attorney executed by said Companies, which remains in full force and effect.

Dated this 3rd day of August , 2026 .

SEAL SEAL SEAL SEAL

_____
Kevin E. Hughes, Assistant Secretary

To verify the authenticity of this Power of Attorney, please call us at 1-800-421-3880.
Please refer to the above-named Attorney(s)-in-Fact and the details of the bond to which this Power of Attorney is attached.

2025075547 Total Pages: 8

PLAT MAP RECORDING SHEET

DEDICATOR(s):

DOMAIN TIMBERLAKE MULTISTATE LLC
S & H HUTTO INVESTMENTS LLC

SUBDIVISION NAME: HERITAGE MILL NORTH, SECTION 1, FINAL PLAT

PROPERTY IS DESCRIBED AS: 38.163 ACRES, WILLIAM GATLIN SURVEY NO. 23, ABSTRACT NO. 271

SUBMITTED BY: BGE, INC

DIGITALLY RECORDED

FILED AND RECORDED
OFFICIAL PUBLIC RECORDS 2025075547

Fee: $545.00
09/24/2025 03:06 PM AMAXEY

Nancy E. Rister, County Clerk
Williamson County, Texas

Unofficial Document

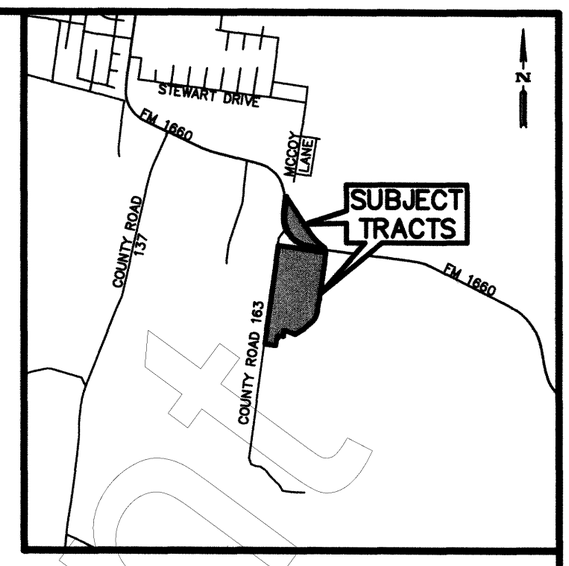

OWNER(S):
DOMAIN TIMBERLAKE MULTISTATE, LLC
590 MADISON AVE 13TH FL
NEW YORK, NEW YORK 10022
(512)334-6775

S&H HUTTO INVESTMENTS LLC
4408 SPICEWOOD SPRING
AUSTIN, TEXAS 78759
(512)596-6544

ENGINEER:
BGE, INC.,
TBPE F-1046
7330 SAN PEDRO AVE., SUITE 202
SAN ANTONIO, TEXAS 78216
(210)581-3600

WILLIAMSON COUNTY SUBMITTAL DATE: 7/28/2025



LAND USE SCHEDULE

DESCRIPTION	NO.	ACREAGE
RESIDENTIAL	130	16.129 AC.
OPEN SPACE	5	1.245 AC.
GREEN LINK & DRAINAGE	1	0.058 AC.
GREEN LINK & EASEMENT	1	0.087 AC.
OPEN SPACE & DRAINAGE	1	0.800 AC.
MIXED USE	2	5.061 AC.
AMENITY	1	3.441 AC.
POND/OPEN SPACE	1	1.664 AC.
RIGHT-OF-WAY	–	8.844 AC.
RIGHT-OF-WAY DEDICATION	–	0.834 AC.
TOTAL	142	38.163 AC.

FINAL PLAT
HERITAGE MILL NORTH SECTION 1

A SUBDIVISION OF 38.163 ACRES OF LAND LOCATED IN THE WILLIAM GATLIN, SURVEY NO. 23, ABSTRACT 271, WILLIAMSON COUNTY, TEXAS

BGE, Inc.
7330 San Pedro Ave., Suite 301
San Antonio, TX 78216
Tel: 210-581-3600 • www.bgeinc.com
TBPELS Registration No. F-1046
TBPELS Licensed Surveying Firm No. 10106500

Doc#2025075547

HUTTO VILLAGE COMMERCIAL, LLC
CALLED 7.770 ACRES
DOC. NO. 2023013454
O.P.R.W.C.

NEW HOPE CHRISTIAN CHURCH
CALLED 8.10 ACRES
(TRACT ONE)
DOC. NO. 2015099686 O.P.R.W.C.

NEW HOPE CHRISTIAN CHURCH
CALLED 2.00 ACRES
(TRACT TWO)
DOC. NO. 2015099686
O.P.R.W.C.

APPROXIMATE LIMITS OF CITY OF HUTTO E.T.J.
APPROXIMATE LIMITS OF THE CITY OF HUTTO

W. GATLIN
SURVEY NO. 23
ABSTRACT NO. 271

HUTTO INDEPENDENT SCHOOL DISTRICT
CALLED 15.01 ACRES
DOC. NO. 2006015406
O.P.R.W.C.

BROOKLANDS PARTNERS, LTD.
CALLED 63.5 ACRES
DOC. NO. 2017023816 O.P.R.W.C.

LEGEND

DOC.	DOCUMENT
D.R.W.C.	DEED RECORDS OF WILLIAMSON COUNTY
M.U.E.	MUNICIPAL UTILITY EASEMENT
NO.	NUMBER
O.P.R.W.C.	OFFICIAL PUBLIC RECORDS OF WILLIAMSON COUNTY
O.R.W.C.	OFFICIAL RECORDS OF WILLIAMSON COUNTY
PG.	PAGE
R.O.W.	RIGHT-OF-WAY
VOL.	VOLUME
●	FOUND 1/2" IRON ROD (UNLESS OTHERWISE NOTED)
O	SET 1/2" IRON ROD W/CAP STAMPED "BGE INC"
(A)	BLOCK
(25)	BUILDING SETBACK LINE– DISTANCE AS NOTED (IN FEET)
■	FOUND TXDOT TYPE I MONUMENT
◉	FOUND TXDOT TYPE II MONUMENT
1	TYPICAL M.U.E. DETAIL (SEE M.U.E. DETAIL 1, SHEET 2)
2	TYPICAL M.U.E. DETAIL (SEE M.U.E. DETAIL 2, SHEET 2)
3	TYPICAL M.U.E. DETAIL (SEE M.U.E. DETAIL 3, SHEET 2)

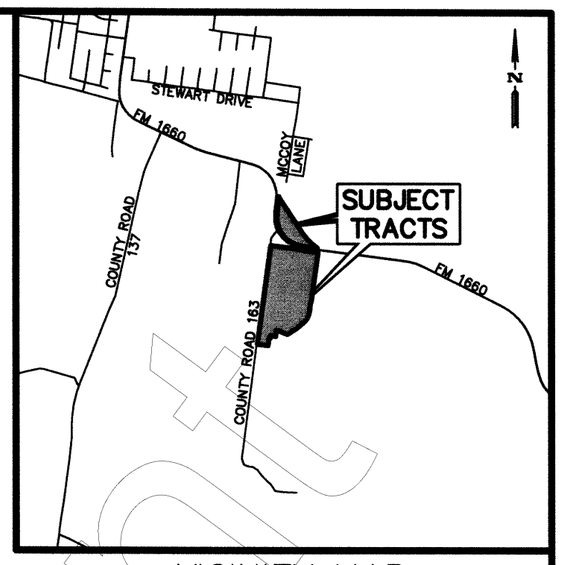

VICINITY MAP
NOT TO SCALE

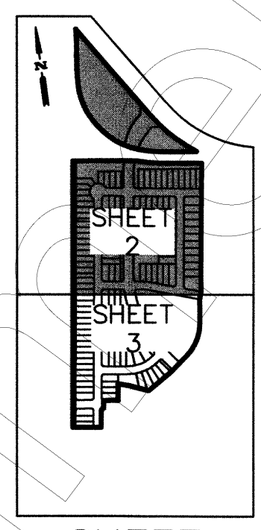

SHEET LEGEND

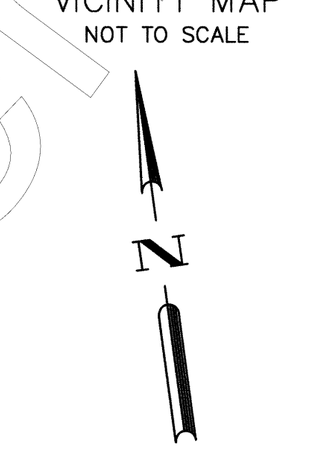

BEARING ORIENTATION IS BASED ON THE TEXAS STATE PLANE COORDINATE SYSTEM, CENTRAL ZONE 4203, NAD83. DISTANCES SHOWN HEREON ARE IN SURFACE AND CAN BE CONVERTED TO GRID BY DIVIDING BY THE COMBINED SCALE FACTOR = 1.0001097659

FM 1660
R.O.W. 150'
DOC. NOS. 2016064873, 2016064874, 2016064888, 2016075808 & 2016096242 O.P.R.W.C.

FM 1660
R.O.W. VARIES
VOL. 384, PGS. 602 & 608
& VOL. 386, PG. 411 D.R.W.C.

HERITAGE MILLS BLVD
R.O.W. VARIES
93' MINIMUM

HERITAGE MILL BOULEVARD
R.O.W. VARIES 70' MINIMUM

COUNTY ROAD 163
APPARENT R.O.W. VARIES
(NO DEED OF RECORD FOUND)

WINDROW RUN 55' R.O.W.

MANIFEST ROAD 55' R.O.W.

OUTHAUL DRIVE 55' R.O.W.

CROWN WHEEL PLACE 55' R.O.W.

"BROKEN"
"HALFF"
"3/8" IN CONC."

P.O.B. TRACT 1
P.O.B. TRACT 2

S 33°08'26" E 797.21'
N 83°07'32" W 172.79'
S 82°35'02" E 437.93'
S 82°49'08" E 208.63'
S 82°49'08" E 160.01'
S 82°49'08" E 441.24'
N 82°04'39" W 458.56'
S 8°15'06" W 780.51'
N 7°48'41" E 1,853.05'

D 1 4.135 AC MIXED USE
E 1 MIXED USE 0.927 AC
A 40 0.800 AC OPEN SPACE & DRAINAGE
B 0.575 AC OPEN SPACE
F 1 0.257 AC OPEN SPACE
G 1 1.664 AC POND/ OPEN SPACE
C 1

10' M.U.E. HEREBY DEDICATED
10' WIDE PIPELINE EASEMENT & R.O.W. DOC. NO. 2008001631 O.P.R.W.C.
WATER/WASTEWATER LINE EASEMENT DOC. NO. 2008018623 O.P.R.W.C.
APPROXIMATE ELECTRIC EASEMENTS VOL. 281, PG. 599, VOL. 328, PG. 337 & VOL. 892, PG. 754 D.R.W.C.
30' CHANNEL EASEMENT VOL. 386, PG. 409 O.P.R.W.C.
32 GREEN LINK & DRAINAGE
22 GREEN LINK & EASEMENT
RIGHT-OF-WAY DEDICATION 0.834 OF ONE ACRE
SEE DETAIL "A" SHEET 3
SEE DETAIL "H" SHEET 3
SEE DETAIL "I" SHEET 3
SEE DETAIL "K" SHEET 3

MICHAEL W. MAHER, II
CALLED 3.616 ACRES
DOC. NO. 2019100608
O.P.R.W.C.

MICHAEL W. MAHER, II
CALLED 2.000 ACRES
DOC. NO. 2019100609
O.P.R.W.C.

DOMAIN TIMBERLAKE MULTISTATE, LLC
CALLED 271.214 ACRE
DOC. NO. 2024034490
O.P.R.W.C.

MATCH LINE SHEET 2
MATCH LINE SHEET 3

M.U.E. DETAIL 1

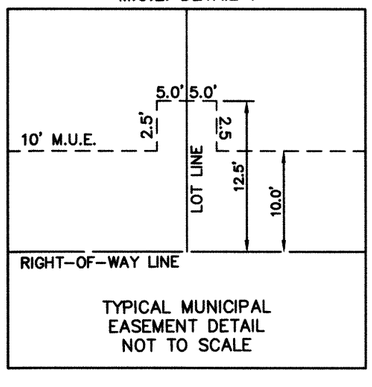

TYPICAL MUNICIPAL EASEMENT DETAIL NOT TO SCALE

M.U.E. DETAIL 2

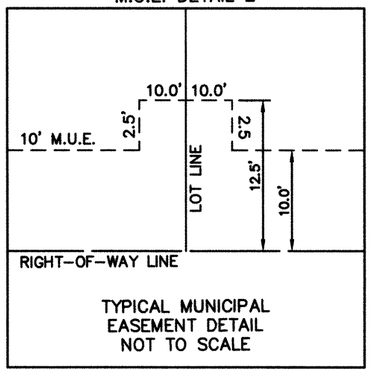

TYPICAL MUNICIPAL EASEMENT DETAIL NOT TO SCALE

M.U.E. DETAIL 3

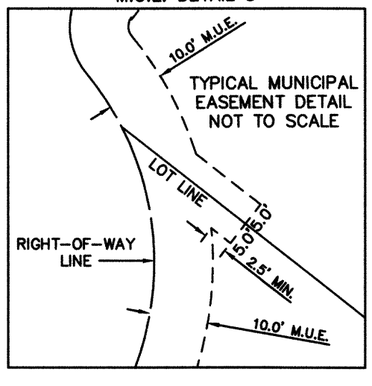

FINAL PLAT
HERITAGE MILL NORTH SECTION 1

A SUBDIVISION OF 38.163 ACRES OF LAND LOCATED IN THE WILLIAM GATLIN, SURVEY NO. 23, ABSTRACT 271, WILLIAMSON COUNTY, TEXAS

BGE, Inc.
7330 San Pedro Ave., Suite 301
San Antonio, TX 78216
Tel: 210-581-3600 • www.bgeinc.com
TBPELS Registration No. F-1046
TBPELS Licensed Surveying Firm No. 10106500

DOC # 2025075547

EAGLE LAKE DRIVE

RIGHT-OF-WAY DEDICATION
0.834 OF ONE ACRE

BROOKLANDS SECTION SIX
DOC. NO. 2023019268
O.P.R.W.C.

MATCH LINE SHEET 2
MATCH LINE SHEET 3

COUNTY ROAD 163
APPARENT R.O.W. VARIES
(NO DEED OF RECORD FOUND)

W. GATLIN
SURVEY NO. 23
ABSTRACT NO. 271

RIGHT-OF-WAY DEDICATION
0.834 OF ONE ACRE

TIMBER BROOK DRIVE

APPROXIMATE LIMITS OF THE CITY OF HUTTO E.T.J.

BROOKLANDS SECTION SIX
DOC. NO. 2023019268
O.P.R.W.C.

BROOKLANDS BOULEVARD

BROOKLANDS SECTION FIVE
DOC. NO. 2022044502
O.P.R.W.C.

N 7°48'41" E 1,853.05'

S 7°55'21" W 1,370.70'

10' M.U.E. HEREBY DEDICATED

GREEN LINK & EASEMENT

SEE DETAIL "H"

MANIFEST ROAD
55' R.O.W.

SEE DETAIL "K" SHEET 3

0.257 AC OPEN SPACE

1
1.664 AC
POND/
OPEN SPACE

CROWN WHEEL PLACE 55' R.O.W.

MICHAEL W. MAHER, II
CALLED 2.000 ACRES
DOC. NO. 2019100609
O.P.R.W.C.

MICHAEL W. MAHER, II
CALLED 3.616 ACRES
DOC. NO. 2019100608
O.P.R.W.C.

DOMAIN TIMBERLAKE MULTISTATE, LLC
CALLED 271.214 ACRE
DOC. NO. 2024034490
O.P.R.W.C.

10' M.U.E. HEREBY DEDICATED

VARIABLE WIDTH SIGHT DISTANCE EASEMENT HEREBY DEDICATED
SEE DETAIL "G" THIS SHEET

0.158 AC OPEN SPACE

HERITAGE MILL BOULEVARD
70' R.O.W.

SEE DETAIL "B"

M
1
3.441 AC
AMENITY CENTER

PULPWOOD ROAD
55' R.O.W.

WINDROW RUN
55' R.O.W.

0.203 AC OPEN SPACE

SEE DETAIL "E"

0.051 AC OPEN SPACE

BISON PRAIRIE ROAD 55' R.O.W.

DOMAIN TIMBERLAKE MULTISTATE, LLC
CALLED 271.214 ACRE
DOC. NO. 2024034490
O.P.R.W.C.

SEE DETAIL "C"

SEE DETAIL "F"

WHIPSAW DRIVE
VARIES 55' & 60' R.O.W.

N 82°04'39" W 198.81'

DOMAIN TIMBERLAKE MULTISTATE, LLC
CALLED 271.214 ACRE
DOC. NO. 2024034490
O.P.R.W.C.

W. GATLIN
SURVEY NO. 23
ABSTRACT NO. 271

0 100 200

DETAIL "A"
NOT TO SCALE

FM 1660
R.O.W. VARIES
VOL. 384, PGS. 602 & 608
& VOL. 386, PG. 411 D.R.W.C.

LOT 1

DETAIL "B"
NOT TO SCALE

MANIFEST ROAD

363.97'
S 72°04'39" E

S 72°04'39" E 364.66'

LOT 45

CLAYTON PROPERTIES GROUP, INC.
CALLED 271.214 ACRE
DOC. NO. 2021007407
O.P.R.W.C.

DETAIL "C"
NOT TO SCALE

LOT 6

LOT 5

PULPWOOD ROAD

DETAIL "D"
NOT TO SCALE

PULPWOOD ROAD

LOT 3

LOT 4

DETAIL "E"
NOT TO SCALE

BISON PRAIRIE RD

LOT 10

LOT 11
OPEN SPACE

DETAIL "F"
NOT TO SCALE

WHIPSAW DRIVE

SHEET LEGEND

SHEET 2

SHEET 3

DETAIL "G"
NOT TO SCALE

LOT 1

VARIABLE WIDTH SIGHT DISTANCE EASEMENT HEREBY DEDICATED

DETAIL "H"
NOT TO SCALE

LOT 23
S 82°04'39" E 126.00'

15' WATERLINE EASEMENT

WINDROW RUN
55' R.O.W.

LOT 22
GREEN LINK & EASEMENT LOT

15' DRAINAGE EASEMENT
S 82°04'39" E 126.00'

PROPOSED
RIGHT-OF-WAY DEDICATION
0.834 OF ONE ACRE

LOT 21

DETAIL "I"
NOT TO SCALE

PROPOSED
RIGHT-OF-WAY DEDICATION
0.834 OF ONE ACRE

LOT 33
S 82°04'39" E 126.00'

LOT 32
GREEN LINK & DRAINAGE LOT

10.0' M.U.E. HEREBY DEDICATED

S 82°04'39" E 126.00'

LOT 31
10.0' M.U.E. HEREBY DEDICATED

WINDROW RUN
55' R.O.W.

DETAIL "J"
NOT TO SCALE

LOT 1

DETAIL "K"
NOT TO SCALE

LOT 16

LOT 4

S 82°04'39" E
40.00'

DETAIL "L"
NOT TO SCALE

LOT 1

LEGEND

DOC.	DOCUMENT
D.R.W.C.	DEED RECORDS OF WILLIAMSON COUNTY
M.U.E.	MUNICIPAL UTILITY EASEMENT
NO.	NUMBER
O.P.R.W.C.	OFFICIAL PUBLIC RECORDS OF WILLIAMSON COUNTY
O.R.W.C.	OFFICIAL RECORDS OF WILLIAMSON COUNTY
PG.	PAGE
R.O.W.	RIGHT-OF-WAY
VOL.	VOLUME
●	FOUND 1/2" IRON ROD (UNLESS OTHERWISE NOTED)
○	SET 1/2" IRON ROD W/CAP STAMPED "BGE INC"
(A)	BLOCK
25	BUILDING SETBACK LINE– DISTANCE AS NOTED (IN FEET)
■	FOUND TXDOT TYPE I MONUMENT
◙	FOUND TXDOT TYPE II MONUMENT
1	TYPICAL M.U.E. DETAIL (SEE M.U.E. DETAIL 1, SHEET 2)
2	TYPICAL M.U.E. DETAIL (SEE M.U.E. DETAIL 2, SHEET 2)
3	TYPICAL M.U.E. DETAIL (SEE M.U.E. DETAIL 3, SHEET 2)

FINAL PLAT
HERITAGE MILL NORTH SECTION 1

A SUBDIVISION OF 38.163 ACRES OF LAND LOCATED IN THE WILLIAM GATLIN, SURVEY NO. 23, ABSTRACT 271, WILLIAMSON COUNTY, TEXAS

BGE, Inc.
7330 San Pedro Ave., Suite 301
San Antonio, TX 78216
Tel: 210-581-3600 • www.bgeinc.com
TBPELS Registration No. F-1046
TBPELS Licensed Surveying Firm No. 10106500

Unofficial Document
DOC# 2025075547

CURVE TABLE					
NUMBER	ARC LENGTH	RADIUS	DELTA	CHORD BEARING	CHORD DISTANCE
C1	405.39'	1,040.00'	22°20'02"	S 44°18'16" E	402.83'
C2	233.27'	1,433.05'	9°19'36"	N 78°27'44" W	233.01'
C3	621.45'	532.96'	66°48'33"	N 37°11'38" W	586.84'
C4	231.43'	1,642.70'	8°04'20"	N 04°21'56" E	231.24'
C5	182.11'	2,011.25'	5°11'17"	N 05°48'27" E	182.05'
C6	250.12'	1,741.28'	8°13'48"	S 78°42'14" E	249.91'
C7	21.41'	277.50'	4°25'15"	N 80°16'34" W	21.41'
C8	23.45'	15.00'	89°35'27"	S 52°43'05" W	21.14'
C9	109.31'	1,040.66'	6°01'07"	S 36°09'00" E	109.26'
C10	144.65'	400.00'	20°43'12"	S 38°38'29" W	143.87'
C11	93.10'	532.96'	10°00'30"	S 64°43'03" E	92.98'
C12	216.31'	420.00'	29°30'33"	S 32°34'07" W	213.93'
C13	30.94'	530.00'	3°20'43"	S 48°59'44" W	30.94'
C14	57.49'	400.00'	8°14'04"	S 12°02'23" W	57.44'
C15	23.56'	15.00'	90°00'00"	S 37°04'39" E	21.21'
C16	23.56'	15.00'	90°00'00"	S 52°55'21" W	21.21'
C17	20.94'	15.00'	80°00'00"	S 32°04'39" E	19.28'
C18	47.56'	272.50'	10°00'00"	N 77°04'39" W	47.50'
C19	25.90'	15.00'	98°56'03"	S 48°27'20" W	22.80'
C20	434.82'	665.00'	37°27'49"	S 19°44'37" E	427.11'
C21	23.56'	15.00'	90°00'31"	N 83°28'46" W	21.21'
C22	245.01'	302.50'	46°24'23"	N 74°43'10" E	238.37'
C23	23.56'	15.00'	90°00'00"	S 52°55'21" W	21.21'
C24	23.67'	15.00'	90°24'33"	S 37°16'55" E	21.29'
C25	23.67'	15.00'	90°24'33"	N 37°16'55" W	21.29'
C26	23.45'	15.00'	89°35'27"	S 52°43'05" W	21.14'
C27	23.67'	15.00'	90°24'33"	S 37°16'55" E	21.29'
C28	23.45'	15.00'	89°35'27"	N 52°43'05" E	21.14'
C29	14.53'	15.00'	55°28'55"	N 19°49'06" W	13.96'
C30	210.45'	60.00'	200°57'50"	S 52°55'21" W	118.00'
C31	14.53'	15.00'	55°28'55"	S 54°20'12" E	13.96'
C32	23.56'	15.00'	90°00'00"	N 52°55'21" E	21.21'
C33	35.34'	22.50'	90°00'00"	S 52°55'21" W	31.82'
C34	23.56'	15.00'	90°00'00"	N 37°04'39" W	21.21'
C35	15.63'	735.00'	1°13'06"	S 07°18'48" W	15.63'
C36	23.88'	15.00'	91°13'06"	N 52°18'48" E	21.44'
C37	23.56'	15.00'	90°00'00"	S 37°04'39" E	21.21'
C38	23.56'	15.00'	90°00'00"	S 52°55'21" W	21.21'
C39	23.56'	15.00'	90°00'00"	N 37°04'39" W	21.21'
C40	26.18'	15.00'	100°00'00"	N 57°55'21" E	22.98'
C41	57.16'	327.50'	10°00'00"	N 77°04'39" W	57.09'
C42	23.19'	15.00'	88°35'40"	S 37°46'49" E	20.95'
C43	16.31'	665.00'	1°24'20"	S 07°13'11" W	16.31'
C44	23.56'	15.00'	90°00'00"	S 52°55'21" W	21.21'
C45	21.54'	15.00'	82°15'54"	N 40°56'42" W	19.73'

CURVE TABLE					
NUMBER	ARC LENGTH	RADIUS	DELTA	CHORD BEARING	CHORD DISTANCE
C46	197.42'	735.00'	15°23'22"	S 07°30'26" E	196.82'
C47	22.83'	15.00'	87°11'46"	N 28°23'46" E	20.69'
C48	69.01'	152.50'	25°55'42"	N 84°57'30" E	68.42'
C49	23.56'	15.00'	90°00'00"	S 37°04'39" E	21.21'
C50	23.56'	15.00'	90°00'00"	S 52°55'21" W	21.21'
C51	93.90'	207.50'	25°55'42"	N 84°57'30" E	93.10'
C52	22.60'	15.00'	86°18'24"	N 64°51'09" W	20.52'
C53	193.23'	735.00'	15°03'48"	S 29°13'51" E	192.68'
C54	23.11'	15.00'	88°16'43"	N 07°22'37" E	20.89'
C55	200.46'	247.50'	46°24'23"	N 74°43'10" E	195.03'
C56	23.56'	15.00'	90°00'00"	S 37°04'39" E	21.21'
C57	520.20'	532.96'	55°55'26"	S 31°45'05" E	499.79'
C58	233.27'	1,433.05'	9°19'36"	S 78°27'44" E	233.01'
C59	8.15'	532.96'	0°52'36"	S 70°09'36" E	8.15'
C60	296.08'	1,040.00'	16°18'42"	S 47°18'56" E	295.08'
C61	28.11'	327.50'	4°55'03"	N 74°32'10" W	28.10'
C62	29.05'	327.50'	5°04'57"	N 79°32'10" W	29.04'
C63	27.38'	152.50'	10°17'07"	N 77°08'12" E	27.34'
C64	40.52'	152.50'	15°13'19"	N 89°53'25" E	40.40'
C65	1.12'	207.50'	0°18'35"	S 82°13'56" E	1.12'
C66	1.12'	152.50'	0°25'17"	S 82°17'17" E	1.12'
C67	36.00'	207.50'	9°56'26"	N 82°42'08" E	35.95'
C68	20.78'	207.50'	5°44'16"	N 74°51'47" E	20.77'
C69	69.78'	247.50'	16°09'16"	N 59°35'36" E	69.55'
C70	74.00'	247.50'	17°07'51"	N 76°14'10" E	73.72'
C71	56.68'	247.50'	13°07'15"	S 88°38'17" E	56.55'
C72	63.63'	302.50'	12°03'09"	S 88°06'13" E	63.52'
C73	36.97'	302.50'	7°00'08"	N 82°22'08" E	36.95'
C74	36.97'	302.50'	7°00'08"	N 75°22'00" E	36.95'
C75	36.97'	302.50'	7°00'08"	N 68°21'51" E	36.95'
C76	36.97'	302.50'	7°00'08"	N 61°21'43" E	36.95'
C77	33.50'	302.50'	6°20'41"	N 54°41'18" E	33.48'
C78	29.66'	60.00'	28°19'37"	S 33°23'45" E	29.36'
C79	41.15'	60.00'	39°17'35"	S 00°24'51" W	40.35'
C80	25.57'	60.00'	24°24'52"	S 32°16'04" W	25.37'
C81	35.98'	60.00'	34°21'26"	S 61°39'13" W	35.44'
C82	21.49'	60.00'	20°31'22"	S 89°05'37" W	21.38'
C83	44.33'	60.00'	42°19'47"	N 59°28'48" W	43.33'
C84	12.27'	60.00'	11°43'11"	N 32°27'20" W	12.25'
C85	14.14'	15.00'	54°00'12"	S 70°55'15" W	13.62'
C86	11.76'	15.00'	44°55'51"	S 21°27'13" W	11.46'
C87	220.16'	665.00'	18°58'07"	S 10°29'46" E	219.15'
C88	36.00'	207.50'	9°56'26"	S 87°21'26" E	35.95'

LINE TABLE		
NUMBER	BEARING	DISTANCE
L1	N 08°24'06" E	9.46'
L2	N 82°35'02" W	42.60'
L3	S 07°17'18" W	116.81'
L4	S 17°55'21" W	55.00'
L5	S 72°04'39" E	0.69'
L6	S 07°26'57" W	67.63'
L7	S 07°29'37" W	50.00'
L8	S 07°47'41" W	59.20'
L9	S 13°56'32" W	47.10'
L10	S 22°15'55" W	47.10'
L11	S 30°35'18" W	47.10'
L12	S 38°54'41" W	47.10'
L13	S 47°14'32" W	47.19'
L14	S 51°31'30" W	50.00'
L15	S 51°31'29" W	91.54'
L16	S 53°34'16" W	19.67'
L17	S 57°49'13" W	201.22'
L18	N 67°38'19" W	145.75'
L19	N 73°47'09" W	71.70'
L20	S 07°55'21" W	115.71'
L21	N 82°29'12" W	79.50'
L22	S 07°30'48" W	55.00'
L23	N 82°29'12" W	0.61'
L24	S 07°55'21" W	118.90'
L25	S 81°57'09" E	69.92'

LINE TABLE		
NUMBER	BEARING	DISTANCE
L26	N 49°00'04" E	41.79'
L27	S 11°08'44" W	68.72'
L28	S 82°04'39" E	108.14'
L29	N 72°04'39" W	110.58'
L30	S 82°04'39" E	33.21'
L31	S 38°28'31" E	101.70'
L32	N 51°30'58" E	8.43'
L33	S 07°55'21" W	115.79'
L34	S 82°29'12" E	96.00'
L35	N 82°29'12" W	96.00'
L36	N 82°04'39" W	99.70'
L37	S 82°04'39" E	40.90'
L38	N 71°59'39" E	5.85'
L39	S 71°59'39" W	6.51'
L40	N 82°04'39" W	111.50'
L41	S 45°31'30" E	28.35'
L42	S 28°49'37" E	44.82'
L43	N 51°30'58" E	8.78'
L44	N 86°57'35" E	34.61'
L45	S 85°21'07" E	40.07'
L46	N 08°58'40" W	228.96'
L47	N 82°35'02" W	21.41'
L48	N 80°56'09" E	39.55'
L49	N 74°00'55" E	40.61'

STREET NAMES						
STREET	R.O.W. WIDTH	CLASSIFICATION	PAVEMENT WIDTH	CENTERLINE LENGTH	DESIGN SPEED	TYPE
BISON PRAIRIE ROAD	55 FT.	LOCAL	33'	485 FT.	25 MPH	PUBLIC
CROWN WHEEL PLACE	55 FT.	LOCAL	33'	692 FT.	25 MPH	PUBLIC
HERITAGE MILL BOULEVARD	VARIES -70 FT MIN.	COLLECTOR	40'	1,807 FT.	35 MPH	PUBLIC
MANIFEST ROAD	55 FT.	LOCAL	33'	719 FT.	25 MPH	PUBLIC
OUTHAUL DRIVE	55 FT.	LOCAL	33'	720 FT.	25 MPH	PUBLIC
PULPWOOD ROAD	55 FT.	LOCAL	33'	293 FT.	25 MPH	PUBLIC
WHIPSAW DRIVE	55 FT.	LOCAL	33'	43 FT.	25 MPH	PUBLIC
WHIPSAW DRIVE	60 FT.	COLLECTOR	40'	153 FT.	35 MPH	PUBLIC
WINDROW RUN	55 FT.	LOCAL	33'	1,638 FT.	25 MPH	PUBLIC
TOTAL LINEAR FEET				6,550 FT.		

BUILDING SETBACK LINE
TYPICAL DETAIL
SEE NOTE #44

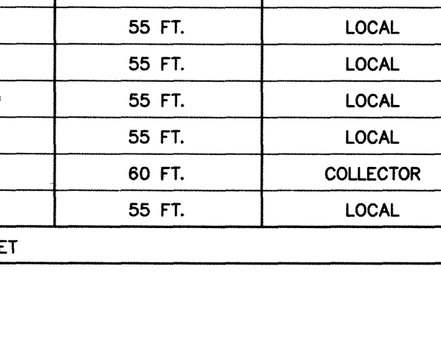

M.U.E. DETAIL 4
LOT 1, BLOCKS D & E

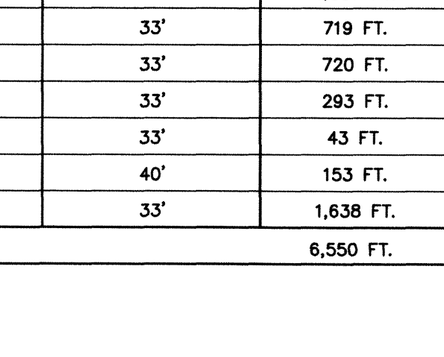

FINAL PLAT
HERITAGE MILL NORTH SECTION 1

A SUBDIVISION OF 38.163 ACRES OF LAND LOCATED IN THE WILLIAM GATLIN, SURVEY NO. 23, ABSTRACT 271, WILLIAMSON COUNTY, TEXAS

BGE, Inc.
7330 San Pedro Ave., Suite 301
San Antonio, TX 78216
Tel: 210-581-3600 • www.bgeinc.com
TBPELS Registration No. F-1046
TBPELS Licensed Surveying Firm No. 10106500

DOC # 2025075547

LOT AREA TABLE			
LOT	BLOCK	SQUARE FEET	TYPE
1	A	6,260	R
2	A	5,040	R
3	A	5,040	R
4	A	5,040	R
5	A	5,040	R
6	A	5,040	R
7	A	5,040	R
8	A	5,040	R
9	A	5,040	R
10	A	5,040	R
11	A	5,040	R
12	A	5,040	R
13	A	5,040	R
14	A	5,040	R
15	A	5,040	R
16	A	5,040	R
17	A	5,040	R
18	A	5,040	R
19	A	5,040	R
20	A	5,040	R
21	A	5,040	R
22	A	3,780	GL/E
23	A	5,040	R
24	A	5,040	R
25	A	5,040	R
26	A	5,040	R
27	A	5,040	R
28	A	5,040	R
29	A	5,040	R
30	A	5,040	R
31	A	5,040	R
32	A	2,520	GL/D
33	A	5,040	R
34	A	5,040	R
35	A	5,040	R
36	A	4,623	R
37	A	3,804	R
38	A	3,876	R
39	A	5,185	R
40	A	34,855	OS/D
41	A	3,519	R
42	A	4,508	R
43	A	4,644	R
44	A	4,665	R

LOT AREA TABLE			
LOT	BLOCK	SQUARE FEET	TYPE
1	B	25,056	OS
2	B	5,347	R
3	B	5,367	R
4	B	5,388	R
5	B	5,409	R
6	B	5,429	R
7	B	5,450	R
8	B	5,471	R
9	B	5,492	R
10	B	5,512	R
11	B	5,533	R
12	B	5,666	R

LOT AREA TABLE			
LOT	BLOCK	SQUARE FEET	TYPE
1	C	7,330	R
2	C	6,133	R
3	C	6,118	R
4	C	6,104	R
5	C	6,089	R
6	C	6,075	R
7	C	6,061	R
8	C	6,046	R
9	C	6,032	R
10	C	6,018	R
11	C	6,005	R
12	C	11,127	R

LOT AREA TABLE			
LOT	BLOCK	SQUARE FEET	TYPE
1	D	180,110	M.U.

LOT AREA TABLE			
LOT	BLOCK	SQUARE FEET	TYPE
1	E	40,363	M.U.

LOT AREA TABLE			
LOT	BLOCK	SQUARE FEET	TYPE
1	F	5,691	R
2	F	4,640	R
3	F	4,640	R
4	F	11,212	OS
5	F	5,200	R
6	F	5,200	R
7	F	5,200	R
8	F	5,200	R
9	F	5,200	R
10	F	5,200	R
11	F	5,200	R
12	F	5,200	R
13	F	5,200	R
14	F	5,902	R
15	F	4,760	R
16	F	4,760	R

LOT AREA TABLE			
LOT	BLOCK	SQUARE FEET	TYPE
1	G	72,498	P/OS
2	G	4,800	R
3	G	4,800	R
4	G	4,800	R
5	G	4,800	R
6	G	4,800	R
7	G	5,952	R
8	G	6,000	R
9	G	6,000	R
10	G	6,000	R
11	G	6,000	R
12	G	6,000	R
13	G	6,000	R
14	G	6,240	R
15	G	7,712	R
16	G	5,910	R
17	G	5,628	R
18	G	5,346	R
19	G	5,075	R
20	G	4,932	R

LOT AREA TABLE			
LOT	BLOCK	SQUARE FEET	TYPE
1	L	5,952	R
2	L	4,800	R
3	L	4,800	R
4	L	6,884	OS
5	L	4,723	R
6	L	4,800	R
7	L	4,800	R
8	L	5,952	R

LOT AREA TABLE			
LOT	BLOCK	SQUARE FEET	TYPE
1	M	149,877	AMEN

LOT AREA TABLE			
LOT	BLOCK	SQUARE FEET	TYPE
1	O	5,952	R
2	O	4,800	R
3	O	4,800	R
4	O	5,596	R
5	O	5,539	R
6	O	8,838	OS
7	O	6,419	R
8	O	7,078	R
9	O	6,077	R
10	O	4,846	R
11	O	4,800	R
12	O	4,800	R
13	O	5,952	R

LOT AREA TABLE			
LOT	BLOCK	SQUARE FEET	TYPE
1	P	5,940	R
2	P	4,640	R
3	P	4,640	R
4	P	5,752	R
5	P	10,649	R
6	P	5,258	R
7	P	6,002	R
8	P	5,341	R
9	P	5,014	R
10	P	4,969	R
11	P	2,240	OS

LOT AREA TABLE			
LOT	BLOCK	SQUARE FEET	TYPE
1	Q	6,260	R
2	Q	5,040	R
3	Q	5,040	R

LEGEND	
AMEN	AMENITY
R	RESIDENTIAL
GL/D	GREENLINK/ DRAINAGE LOT
GL/E	GREENLINK/ EASEMENT LOT
OS/D	OPEN SPACE/ DRAINAGE LOT
MU	MIXED USE
L/D	LANDSCAPE/ DRAINAGE
P/OS	POND/OPEN SPACE

Unofficial Document

FINAL PLAT

HERITAGE MILL NORTH SECTION 1

A SUBDIVISION OF 38.163 ACRES OF LAND LOCATED IN THE WILLIAM GATLIN, SURVEY NO. 23, ABSTRACT 271, WILLIAMSON COUNTY, TEXAS

BGE, Inc.
7330 San Pedro Ave., Suite 301
San Antonio, TX 78216
Tel: 210-581-3600 • www.bgeinc.com
TBPELS Registration No. F-1046
TBPELS Licensed Surveying Firm No. 10106500

Doc #2025075547

DESCRIPTION OF A 38.163 ACRE TRACT OF LAND

FIELD NOTES FOR A 38.163 ACRE TRACT OF LAND IN THE WILLIAM GATLIN SURVEY NUMBER 23, ABSTRACT 271, WILLIAMSON COUNTY, TEXAS; BEING ALL OF A CALLED 5.794 ACRE TRACT OF LAND (TRACT 2) AS CONVEYED UNTO S&H HUTTO INVESTMENTS, LLC IN DOCUMENT NUMBER 2021009582 OF THE OFFICIAL PUBLIC RECORDS OF WILLIAMSON COUNTY, TEXAS; AND A PORTION OF A CALLED 271.214 ACRE TRACT OF LAND AS CONVEYED UNTO DOMAIN TIMBERLAKE MULTISTATE, LLC IN DOCUMENT NUMBER 2024034490 OF THE OFFICIAL PUBLIC RECORDS OF WILLIAMSON COUNTY, TEXAS; SAID 38.163 ACRE TRACT OF LAND BEING MORE PARTICULARLY DESCRIBED AS TRACT 1 AND TRACT 2 BY METES AND BOUNDS AS FOLLOWS:

Tract No. 1, 5.794 Acres of Land

BEGINNING at a Texas Department of Transportation (TxDOT) Type II right-of-way monument found on the original north right-of-way line of F.M. 1660 (R.O.W. ~ Varies), as described in Volume 384, Pages 602 & 608 and Volume 386, Page 411 of the Deed Records of Williamson County, Texas, at the intersection with the current south right-of-way line F.M. 1660 (R.O.W. ~ Varies), as described in Document Numbers 2016064873, 2016064874, 2016064888, 2016075808, and 2016096242 of the Official Public Records of Williamson County, Texas, being the most easterly corner of said 5.794 acre tract, for the east corner and POINT OF BEGINNING of the herein described tract;

THENCE, coincident with the common line of the 5.794 acre tract and said original north right-of-way the following six (6) courses;

1) N 83°07'32" W, a distance of 172.79 feet, to a 3/8-inch iron rod found in concrete for a point of curvature of the herein described tract;
2) Curving to the right, with a radius of 1,433.05 feet, an arc length of 233.27 feet, a central angle of 09°19'36", a chord bearing of N 78°27'44" W, and a chord distance of 233.01 feet to a 1/2-inch iron rod with a cap stamped "HALFF ASSOCIATES" found at the end of this curve and the beginning of a non-tangent curve;
3) Curving to the right, with a radius of 532.96 feet, an arc length of 621.45 feet, a central angle of 66°48'33", a chord bearing of N 37°11'38" W, and a chord distance of 586.84 feet to a broken Texas Department of Transportation (TxDOT) Type I right-of-way monument found at the end of this curve and the beginning of another non-tangent curve;
4) Curving to the right, with a radius of 1,642.70 feet, an arc length of 231.43 feet, a central angle of 08°04'20", a chord bearing of N 04°21'56" E, and a chord distance of 231.24 feet to a TxDOT Type I right-of-way monument found for a point of tangency;
5) N 08°24'06" E, a distance of 9.46 feet, to a TxDOT Type I right-of-way monument found for a point of curvature;
6) Curving to the left, with a radius of 2,011.25 feet, an arc length of 182.11 feet, a central angle of 05°11'17", a chord bearing of N 05°48'27" E, and a chord distance of 182.05 feet to a 1/2-inch iron rod with a cap stamped "BGE INC" set on the aforementioned current southwest right-of-way line of F.M.1660, at the end of this curve for the north corner of the 5.794 acre tract and of the herein described tract;

THENCE, S 33°08'26" E, coincident with the common line of the 5.794 acre tract and said current right-of-way line, a distance of 797.21 feet to a TxDOT Type II right-of-way monument found for the beginning of a non-tangent curve of the herein described tract;

THENCE, continuing coincident with said common line, curving to the left, with a radius of 1,040.00 feet, an arc length of 405.39 feet, a central angle of 22°20'02", a chord bearing of S 44°18'16" E, and a chord distance of 402.83 feet to the POINT OF BEGINNING and containing 5.794 acres of land, more or less.

Tract No. 2, 32.369 Acres of Land

BEGINNING at a 1/2-inch iron rod found on the south right-of-way line of FM 1660 (R.O.W. ~ varies) as described in Volume 384, Pages 602 & 608 and Volume 386, Page 411 of the Deed Records of Williamson County, Texas, at the common corner of said 271.214 acre tract and a called 3.616 acre tract of land as conveyed unto Michael W. Maher, II in Document Number 2019100608 of the Official Public Records of Williamson County, Texas, for northeast corner and POINT OF BEGINNING of the herein described tract;

THENCE, S 08°15'06" W, departing the south right-of-way line of FM 1660, coincident with the common line of 271.214 acre tract and said 3.616 acre tract, a distance of 780.51 feet to a 1/2-inch iron rod found at the southwest corner of said 3.616 acre tract, for an angle point of the herein described tract;

THENCE, departing said common line, over and across the 271.214 acre tract the following twenty-five (25) courses:

1) S 07°17'18" W, a distance of 116.81 feet to a 1/2-inch iron rod with cap stamped "BGE INC" set for an angle point of the herein described tract;
2) S 17°55'21" W, a distance of 55.00 feet to a 1/2-inch iron rod with cap stamped "BGE INC" set for an interior corner of the herein described tract;
3) S 72°04'39" E, a distance of 0.69 feet to a 1/2-inch iron rod with cap stamped "BGE INC" set for an exterior corner of the herein described tract;
4) S 07°26'57" W, a distance of 67.63 feet to a 1/2-inch iron rod with cap stamped "BGE INC" set for an angle point of the herein described tract;
5) S 07°29'37" W, a distance of 50.00 feet to a 1/2-inch iron rod with cap stamped "BGE INC" set for an angle point of the herein described tract;
6) S 07°47'41" W, a distance of 59.20 feet to a 1/2-inch iron rod with cap stamped "BGE INC" set for an angle point of the herein described tract;
7) S 13°56'32" W, a distance of 47.10 feet to a 1/2-inch iron rod with cap stamped "BGE INC" set for an angle point of the herein described tract;
8) S 22°15'55" W, a distance of 47.10 feet to a 1/2-inch iron rod with cap stamped "BGE INC" set for an angle point of the herein described tract;
9) S 30°35'18" W, a distance of 47.10 feet to a 1/2-inch iron rod with cap stamped "BGE INC" set for an angle point of the herein described tract;
10) S 38°54'41" W, a distance of 47.10 feet to a 1/2-inch iron rod with cap stamped "BGE INC" set for an angle point of the herein described tract;
11) S 47°14'32" W, a distance of 47.19 feet to a 1/2-inch iron rod with cap stamped "BGE INC" set for an angle point of the herein described tract;
12) S 51°31'30" W, a distance of 50.00 feet to a 1/2-inch iron rod with cap stamped "BGE INC" set for an angle point of the herein described tract;
13) S 51°31'29" W, a distance of 91.54 feet to a 1/2-inch iron rod with cap stamped "BGE INC" set for an angle point of the herein described tract;
14) S 53°34'16" W, a distance of 19.67 feet to a 1/2-inch iron rod with cap stamped "BGE INC" set for an angle point of the herein described tract;
15) S 57°49'13" W, a distance of 201.22 feet to a 1/2-inch iron rod with cap stamped "BGE INC" set for a corner of the herein described tract;
16) N 67°38'19" W, a distance of 145.75 feet to a 1/2-inch iron rod with cap stamped "BGE INC" set for an angle point of the herein described tract;
17) N 73°47'09" W, a distance of 71.70 feet to a 1/2-inch iron rod with cap stamped "BGE INC" set for a re-entrant corner of the herein described tract;
18) S 07°55'21" W, a distance of 115.71 feet to a 1/2-inch iron rod with cap stamped "BGE INC" set at the beginning of a non-tangent curve for an exterior corner of the herein described tract;
19) Curving to the left, with a radius of 277.50 feet, an arc length of 21.41 feet, a central angle of 04°25'15", a chord bearing of N 80°16'34" W, and a chord distance of 21.41 feet to a 1/2-inch iron rod with cap stamped "BGE INC" set for a point of tangency of the herein described tract;
20) N 82°29'12" W, a distance of 79.50 feet to a 1/2-inch iron rod with cap stamped "BGE INC" set for a re-entrant corner of the herein described tract;
21) S 07°30'48" W, a distance of 55.00 feet to a 1/2-inch iron rod with cap stamped "BGE INC" set for a corner of the herein described tract;
22) N 82°29'12" W, a distance of 0.61 feet to a 1/2-inch iron rod with cap stamped "BGE INC" set for a point of curvature of the herein described tract;
23) Curving to the left, with a radius of 15.00 feet, an arc length of 23.45 feet, a central angle of 89°35'27", a chord bearing of S 52°43'05" W, and a chord distance of 21.14 feet to a 1/2-inch iron rod with cap stamped "BGE INC" set for a point of tangency of the herein described tract;
24) S 07°55'21" W, a distance of 118.90 feet to a 1/2-inch iron rod with cap stamped "BGE INC" set for the southeast corner of the herein described tract; and
25) N 82°04'39" W, a distance of 198.81 feet to a 1/2-inch iron rod with cap stamped "BGE INC" set on the apparent east right-of-way line of County Road 163 (Apparent R.O.W. ~ varies), no deed of record found, and the west line of the 271.214 acre tract for the southwest corner of the herein described tract;

THENCE, N 07°48'41" E, coincident with the common line of the 271.214 acre tract and said apparent right-of-way line, a distance of 1,853.05 feet to a 1/2-inch iron rod with cap stamped "BGE INC" set at the northeast corner of the apparent right-of-way of said County Road 163, at the northwest corner of the 271.214 acre tract, on the original aforementioned south right of-way line of F.M. 1660, for the northwest corner of the herein described tract, from which a broken TxDOT Type I concrete right-of-way monument found on the east line of a called 15.01 acre tract of land conveyed unto the Hutto Independent School District in Document Number 2006015406 of the Official Public Records of Williamson County, Texas, at the northwest corner of the apparent right-of-way of County Road 163, bears N 82°35'02" W a distance of 42.60 feet;

THENCE, coincident with the common line of the 271.214 acre tract and said south right-of-way line, the following three (3) courses:

1) S 82°35'02" E, a distance of 437.93 feet to a TxDOT Type I right-of-way monument found for the beginning of a non-tangent curve of the herein described tract;
2) Curving to the left, with a radius of 1,741.28 feet, an arc length of 250.12 feet, a central angle of 08°13'48", a chord bearing of S 78°42'14" E, and a chord distance 249.91 feet to a broken TxDOT Type I right-of-way monument found for a point of tangency of the herein described tract;
3) S 82°49'08" E, a distance of 208.63 feet to the POINT OF BEGINNING and containing 32.369 acres of land, more or less.

The resultant net acreage being 38.163 acres of land, more or less.

NOTES:

1. NO LOT IN THIS SUBDIVISION SHALL BE OCCUPIED UNTIL CONNECTED TO THE APPROVED WATER AND WASTEWATER SYSTEMS.
2. IT IS THE RESPONSIBILITY OF THE MUNICIPAL UTILITY DISTRICT NO. 35, NOT THE COUNTY, TO ASSURE COMPLIANCE WITH THE PROVISIONS OF ALL APPLICABLE STATE, FEDERAL AND LOCAL LAWS AND REGULATIONS RELATING TO THE PLATTING AND DEVELOPMENT OF THIS PROPERTY.
3. THIS SUBDIVISION IS SUBJECT TO STORM-WATER MANAGEMENT CONTROLS AS REQUIRED BY WILLIAMSON COUNTY SUBDIVISION REGULATIONS, SECTION B11.1, ON NEW DEVELOPMENT THAT WOULD EVOKE SUCH CONTROLS BEYOND EXISTING CONDITIONS.
4. SIDEWALKS SHALL BE CONSTRUCTED ON BOTH SIDES OF ALL STREETS WITHIN AND BOUNDING THIS SUBDIVISION, IN CONFORMANCE WITH THE UDC, AS AMENDED. ALL SIDEWALKS SHALL BE MAINTAINED BY MUNICIPAL UTILITY DISTRICT NO. 35
5. NO LOT IN THIS SUBDIVISION IS ENCROACHED BY A SPECIAL FLOOD HAZARD AREA(S) INUNDATED BY THE 100-YEAR (1% CHANCE) FLOOD AS IDENTIFIED BY THE U.S. FEDERAL EMERGENCY MANAGEMENT AGENCY FLOOD INSURANCE RATE MAP NO. 48491C0520F, DATED DECEMBER 20, 2019 FOR WILLIAMSON COUNTY, TEXAS.
6. THIS TRACT IS NOT LOCATED WITHIN THE EDWARDS AQUIFER RECHARGE ZONE.
7. NO PORTION OF THIS SUBDIVISION LIES WITHIN THE DESIGNATED 100 YEAR FLOOD PLAIN AS DEFINED BY F.E.M.A. MAP NO. 48491C0520F, DATED DECEMBER 20, 2019.
8. DRIVEWAYS SHALL ONLY CONNECT TO AN INTERNAL PLATTED ROADS
9. DRIVEWAY ACCESS TO LOTS WITHIN THIS SUBDIVISION FROM SIDE STREETS IS PROHIBITED.
10. NO BUILDING, FENCING, LANDSCAPING, OR STRUCTURES ARE ALLOWED WITHIN ANY DRAINAGE EASEMENT UNLESS EXPRESSLY PERMITTED BY THE CITY OF HUTTO.
11. MAINTENANCE RESPONSIBILITY FOR DRAINAGE WILL NOT BE ACCEPTED BY THE COUNTY OTHER THAN THAT ACCEPTED IN CONNECTION WITH DRAINING OR PROTECTING THE ROAD SYSTEM. MAINTENANCE RESPONSIBILITY FOR STORM WATER MANAGEMENT CONTROLS WILL REMAIN WITH THE OWNER.
12. WATER SERVICE IS PROVIDED BY: CITY OF HUTTO
13. WASTEWATER SERVICE IS PROVIDED BY: CITY OF HUTTO
14. THE LANDOWNER ASSUMES ALL RISKS ASSOCIATED WITH IMPROVEMENTS LOCATED IN THE RIGHT-OF-WAY OR ROAD WIDENING EASEMENTS. BY PLACING ANYTHING IN THE RIGHT-OF-WAY OR ROAD WIDENING EASEMENTS, THE LANDOWNER INDEMNIFIES AND HOLDS THE COUNTY, IT'S OFFICERS AND EMPLOYEES HARMLESS FROM ANY LIABILITY OWING TO PROPERTY DEFECTS OR NEGLIGENCE NOT ATTRIBUTABLE TO THEM AND ACKNOWLEDGES THAT THE IMPROVEMENTS MAY BE REMOVED BY THE COUNTY AND THAT THE OWNER OF THE IMPROVEMENTS MAY BE REMOVED BY THE COUNTY AND THAT THE OWNER OF THE IMPROVEMENT SHALL BE RESPONSIBLE FOR THE RELOCATION AND/OR REPLACEMENT OF THE IMPROVEMENT.
15. HERITAGE MILL NORTH SECTION 1 IS SUBJECT TO TRAFFIC IMPACT FEES IN ACCORDANCE WITH THE CONSENT AGREEMENT DOCUMENT NUMBER 2021043665.
16. A CERTIFICATE OF COMPLIANCE IS HEREBY ISSUED FOR ALL LOTS WITHIN THIS SUBDIVISION. THIS CERTIFICATE OF COMPLIANCE IS VALID UNTIL SUCH TIME AS FEMA OR THE COUNTY REVISES OR NEWLY ADOPTS FLOODPLAIN BOUNDARIES IN THIS VICINITY.
17. ALL PUBLIC DEDICATION SHALL BE ACCOMPLISHED FREE OF LIENS. RELEASE OF LIENS SHALL BE PROVIDED BY THE COMMISSIONER'S COURT.
18. A TEN FOOT WIDE MUNICIPAL UTILITY EASEMENT IS HEREBY DEDICATED ADJACENT TO ALL STREET RIGHT-OF-WAY.
19. DRIVEWAY MAINTENANCE WILL BE THE RESPONSIBILITY OF THE PROPERTY OWNER. IF OBSTRUCTIONS OCCUR WITHIN THE DRIVEWAY CULVERT, THE COUNTY RESERVES THE RIGHT TO CLEAR OBSTRUCTIONS THAT ARE CAUSING ADVERSE IMPACTS TO THE ROADWAY.
20. LOT 1, BLOCK G, IS DESIGNATED AS DETENTION POND, DRAINAGE, AND OPEN SPACE LOT AND SHALL BE DEEDED TO AND MAINTAINED BY WILLIAMSON COUNTY MUD 35.
21. LOTS 22, 32, 40, BLOCK A, ARE DESIGNATED AS GREEN LINK, DRAINAGE, AND OPEN SPACE LOTS AND SHALL BE DEEDED TO AND MAINTAINED BY WILLIAMSON COUNTY MUD 35.
22. LOT 1, BLOCK B, LOT 4, BLOCK F, LOT 4, BLOCK L, LOT 6, BLOCK O, AND LOT 11, BLOCK P ARE DESIGNATED AS OPEN SPACE LOTS AND SHALL TO BE DEDICATED TO THE HOA.
23. LOT 1, BLOCK M IS DESIGNATED AS AN AMENITY CENTER LOT AND SHALL TO BE DEDICATED TO THE HOA.
24. BUILDING SETBACK LINES SHALL CONFORM TO UDC REQUIREMENTS, AS AMENDED.
25. TREES SHALL BE INSTALLED ON BOTH SIDES OF ALL STREETS WITHIN AND BOUNDING THIS SUBDIVISION, IN CONFORMANCE WITH THE UDC, AS AMENDED.
26. WATER AND WASTEWATER SERVICE FOR THIS SUBDIVISION WILL BE AVAILABLE THROUGH THE CITY OF HUTTO AFTER THE APPROPRIATE WATER AND WASTEWATER SYSTEM IMPROVEMENTS ARE INSTALLED TO THIS SITE. THE CITY OF HUTTO ASSUMES NO OBLIGATIONS FOR INSTALLING ANY WATER AND WASTEWATER IMPROVEMENTS REQUIRED TO SERVE THIS SITE OUTSIDE OF THE CONSENT AGREEMENT (WILLIAMSON COUNTY MUD NO. 35).
27. IN ORDER TO PROMOTE DRAINAGE AWAY FROM A STRUCTURE, THE SLAB ELEVATION SHOULD BE BUILT AT LEAST ONE-FOOT ABOVE THE SURROUNDING GROUND, AND THE GROUND SHOULD BE GRADED AWAY FROM THE STRUCTURE AT A SLOPE OF 1/2" PER FOOT FOR A DISTANCE OF AT LEAST 10 FEET.
28. ELECTRIC SERVICE IS PROVIDED BY: ONCOR.
29. GAS SERVICE IS PROVIDED BY: TEXAS GAS SERVICE.
30. ALL SUBDIVISION CONSTRUCTION SHALL CONFORM TO THE CONSENT AGREEMENT (WILLIAMSON COUNTY MUD NO. 35), CITY OF HUTTO UNIFIED DEVELOPMENT CODE, CONSTRUCTION STANDARDS, AND GENERALLY ACCEPTED ENGINEERING PRACTICES.
31. ON-SITE STORMWATER DETENTION FACILITIES WILL BE PROVIDED TO REDUCE POST-DEVELOPMENT PEAK RATES OF DISCHARGE OF THE 2-, 10-, 25-, AND 100-YEAR STORM EVENTS.
32. ALL EASEMENTS ON PRIVATE PROPERTY SHALL BE MAINTAINED BY THE PROPERTY OWNER OR HIS OR HER ASSIGNS.
33. GREENLINK LOTS SHALL BE DEVELOPED IN CONFORMANCE WITH THE UDC, AS AMENDED.
34. MAXIMUM IMPERVIOUS COVER PER RESIDENTIAL AND NON-RESIDENTIAL LOTS SHALL BE BASED ON THE DRAINAGE REPORT.
35. A PORTION OF THIS DEVELOPMENT IS CONSIDERED EXEMPT FROM ON-SITE STORMWATER DETENTION CONTROLS BASED ON WILLIAMSON COUNTY SUBDIVISION REGULATION B11.1.1, WHICH STATES THAT A PROPOSED DEVELOPMENT MAY BE CONSIDERED EXEMPT FROM PROVIDING ON-SITE STORMWATER DETENTION IF THE DEVELOPMENT RELEASES UNDETAINED STORMWATER DIRECTLY INTO A DETENTION EXEMPT STREAM REACH.
36. NO CONSTRUCTION, PLANTING, OR GRADING SHALL BE PERMITTED TO INTERFERE WITH SIGHT EASEMENTS BETWEEN THE HEIGHTS OF THREE AND EIGHT FEET AS MEASURED FROM THE CROWNS OF THE ADJACENT STREETS.
37. THE OWNER SHALL CREATE A MANDATORY HOMEOWNERS ASSOCIATION THAT SHALL BE RESPONSIBLE FOR THE MAINTENANCE AND LIABILITY OF ANY LANDSCAPING, IRRIGATION, SIDEWALKS, ILLUMINATION, SUBDIVISION IDENTIFICATION SIGNS, WATER QUALITY FEATURES, ETC. PLACED WITHIN THE WILLIAMSON COUNTY RIGHT-OF-WAY. THIS HOMEOWNERS ASSOCIATION SHALL HAVE ASSESSMENT AUTHORITY TO INSURE THE PROPER FUNDING FOR MAINTENANCE.
38. RESIDENTIAL DRIVEWAYS ARE TO BE LOCATED NO CLOSER TO THE CORNER OF INTERSECTING RIGHTS OF WAY THAN 60 PERCENT OF THE PARCEL FRONTAGE OR 50 FEET, WHICHEVER IS LESS.
39. THIS SUBDIVISION IS SUBJECT TO STORM-WATER MANAGEMENT CONTROLS AS REQUIRED BY WILLIAMSON COUNTY SUBDIVISION REGULATIONS, SECTION B11.1 (PER DECEMBER 7, 2021, REGULATIONS), ON NEW DEVELOPMENT THAT WOULD EVOKE SUCH CONTROLS BEYOND EXISTING CONDITIONS.
40. IMPROVEMENTS WITHIN THE COUNTY ROAD RIGHT-OF-WAY INCLUDING, BUT NOT LIMITED TO, LANDSCAPING, IRRIGATION LIGHTING, CUSTOM SIGNS, IS PROHIBITED WITHOUT FIRST OBTAINING AN EXECUTED LICENSE AGREEMENT WITH WILLIAMSON COUNTY.
41. THE MINIMUM FFE SHALL BE AT LEAST ONE FOOT ABOVE THE ADJACENT FINISHED GRADE AND BFE. EXCEPTIONS CAN BE MADE AT ENTRANCE AND EGRESS POINTS, WHERE NECESSARY, TO MEET THE AMERICANS WITH DISABILITIES ACT (ADA). RECREATIONAL VEHICLE PARKING PADS MUST ALSO BE PLACED AT LEAST ONE FOOT ABOVE BFE.
42. A SECOND POINT OF ACCESS, MEETING ALL CRITERIA OF THE MOST RECENTLY ADOPTED FIRE CODE, AS AMENDED, SHALL BE REQUIRED ON ALL PLATS OF RESIDENTIAL SUBDIVISIONS CONTAINING MORE THAN 29 DWELLING UNITS.
43. FIRE LANE STRIPING SHALL BE POSTED ON ONE SIDE OF THE STREET FOR STREETS MORE THAN 26 FEET WIDE AND LESS THAN 32 FEET WIDE.
44. LOT 1, BLOCKS D AND E, SHALL INCLUDE A 50-FOOT BUILDING SETBACK ADJACENT TO FM 1660, 25-FOOT BUILDING SETBACK ADJACENT TO HERITAGE MILL BOULEVARD, AND 20-FOOT BUILDING SETBACK ADJACENT TO CR 163.

FINAL PLAT

HERITAGE MILL NORTH SECTION 1

A SUBDIVISION OF 38.163 ACRES OF LAND LOCATED IN THE WILLIAM GATLIN, SURVEY NO. 23, ABSTRACT 271, WILLIAMSON COUNTY, TEXAS

BGE, Inc.
7330 San Pedro Ave., Suite 301
San Antonio, TX 78216
Tel: 210-581-3600 • www.bgeinc.com
TBPELS Registration No. F-1046
TBPELS Licensed Surveying Firm No. 10106500

Doc # 2025075547

STATE OF TEXAS §
§ KNOW ALL MEN BY THESE PRESENTS:
COUNTY OF WILLIAMSON §

THAT DOMAIN TIMBERLAKE MULTISTATE, LLC, ACTING HEREBY AND THROUGH, HOUDIN HONARVAR, ACTING MANAGER, THE OWNER OF A CALLED 271.214 ACRE TRACT OF LAND AS CONVEYED BY SPECIAL WARRANTY DEED RECORDED IN DOCUMENT NUMBER 2024034490 OF THE OFFICIAL PUBLIC RECORDS OF WILLIAMSON, COUNTY, TEXAS, AND THAT S&H HUTTO INVESTMENTS, LLC, ACTING HEREBY AND THROUGH JOE STRAUB, MANAGER, THE OWNER OF A CALLED 5.794 ACRE TRACT OF LAND (TRACT 2) AS CONVEYED BY SPECIAL WARRANTY DEED RECORDED IN DOCUMENT NUMBER 2021009582 OF THE OFFICIAL PUBLIC RECORDS WILLIAMSON COUNTY, TEXAS, BEING IN THE WILLIAM GATLIN SURVEY NUMBER 23, ABSTRACT 271 LOCATED IN WILLIAMSON COUNTY, TEXAS, DOES HEREBY SUBDIVIDE 38.163 ACRES OF LAND AND DO HEREBY STATE THAT THERE ARE NO LIEN HOLDERS OF THOSE CERTAIN TRACTS OF LAND, AND THAT WE OWNERS OF 38.163 ACRES OF LAND AS SHOWN HEREON, DO HEREBY SUBDIVIDE AND CONSENT TO ALL PLAT NOTE REQUIREMENTS SHOWN HEREON, AND DO HEREBY FOREVER DEDICATE TO THE PUBLIC FOR SUCH PURPOSES AS WILLIAMSON COUNTY, TEXAS MAY DEEM APPROPRIATE AND DO HEREBY STATE THAT ALL PUBLIC ROADWAYS AND EASEMENTS AS SHOWN ON THIS PLAT ARE FREE OF LIENS.

THIS SUBDIVISION IS TO BE KNOWN AS:

HERITAGE MILL NORTH SECTION 1

WITNESS MY HAND, THIS THE 14th DAY OF May, 2025 A.D.

DOMAIN TIMBERLAKE MULTISTATE ~~2~~ NP, LLC,
A DELAWARE LIMITED LIABILITY COMPANY

HOUDIN HONARVAR, ACTING MANAGER

STATE OF ~~TEXAS~~ New York §
New York §
COUNTY OF ~~WILLIAMSON~~ §

BEFORE ME, THE UNDERSIGNED AUTHORITY, PERSONALLY APPEARED HOUDIN HONARVAR, ACTING MANAGER, KNOWN TO ME TO BE THE PERSON WHOSE NAME IS SUBSCRIBED TO THE FOREGOING INSTRUMENT AND ACKNOWLEDGED TO ME THAT HE EXECUTED THE SAME FOR THE PURPOSES AND CONSIDERATION THEREIN EXPRESSED AND IN THE CAPACITY THEREIN STATED.

Josephine G Cimino — 5-14-2025
NOTARY PUBLIC, STATE OF TEXAS ~~New York~~ — DATE

Josephine G. Cimino
PRINT NOTARY'S NAME
MY COMMISSION EXPIRES 7-5-2028

JOSEPHINE G CIMINO
NOTARY PUBLIC, STATE OF NEW YORK
Registration No. 01CI0026554
Qualified in Nassau County
My Commission Expires 7-5-2028

WITNESS MY HAND, THIS THE 29th DAY OF July, 2025 A.D.

S&H HUTTO INVESTMENTS, LLC., A TEXAS LIMITED LIABILITY COMPANY
4408 SPICEWOOD SPRINGS
AUSTIN, TEXAS 78759

BY: JOE STRAUB,
MANAGER

JOE STRAUB, MANAGER

STATE OF TEXAS §
§ KNOW ALL MEN BY THESE PRESENTS:
COUNTY OF WILLIAMSON §

BEFORE ME, THE UNDERSIGNED AUTHORITY, PERSONALLY APPEARED JOE STRAUB, MANAGER, KNOWN TO ME TO BE THE PERSON WHOSE NAME IS SUBSCRIBED TO THE FOREGOING INSTRUMENT AND ACKNOWLEDGED TO ME THAT HE EXECUTED THE SAME FOR THE PURPOSES AND CONSIDERATION THEREIN EXPRESSED AND IN THE CAPACITY THEREIN STATED.

Sharon Daniels — 7-29-25
NOTARY PUBLIC, STATE OF TEXAS — DATE

Sharon Daniels
PRINT NOTARY'S NAME
MY COMMISSION EXPIRES 12-18-27

SHARON DANIELS
My Notary ID # 8581670
Expires December 18, 2027

I, RICHARD PHAM, P.E., AM AUTHORIZED UNDER THE LAWS OF THE STATE OF TEXAS, TO PRACTICE THE PROFESSION OF ENGINEERING, AND DO HEREBY CERTIFY THAT THIS PLAT IS FEASIBLE FROM AN ENGINEERING STANDPOINT, AND IS TRUE AND CORRECT TO THE BEST OF MY KNOWLEDGE.

5/5/2025
DATE

RICHARD PHAM, P.E.
LICENSED PROFESSIONAL ENGINEER NO. 142275
BGE, INC.
101 WEST LOUIS HENNA BLVD., SUITE 400
AUSTIN, TEXAS 78728

STATE OF TEXAS
RICHARD PHAM
142275
LICENSED
PROFESSIONAL ENGINEER

I, DION P. ALBERTSON, AM AUTHORIZED UNDER THE LAWS OF THE STATE OF TEXAS, TO PRACTICE THE PROFESSION OF LAND SURVEYING, AND DO HEREBY CERTIFY THAT THIS PLAT IS TRUE AND CORRECT TO THE BEST OF MY KNOWLEDGE AND WAS PREPARED FROM AN ACTUAL ON THE GROUND SURVEY, BY EMPLOYEES OF BGE INC. ON JANUARY 2020.

4/30/25
DATE

DION P. ALBERTSON, R.P.L.S.
REGISTERED PROFESSIONAL LAND SURVEYOR NO. 4963
BGE, INC.
7330 SAN PEDRO AVE., SUITE 301
SAN ANTONIO, TEXAS 78216

STATE OF TEXAS
REGISTERED
DION P. ALBERTSON
4963
PROFESSIONAL
LAND SURVEYOR

ROAD NAME AND ADDRESS ASSIGNMENT VERIFIED THIS THE 5th DAY OF September, 2025 A.D.

Teresa Baker
WILLIAMSON COUNTY ADDRESS COORDINATOR

THIS PLAT WAS APPROVED FOR RECORDING BY THE PLANNING AND ZONING COMMISSION CHAIR ON THE 6 DAY OF May, 2025

[redacted] Richard Hudson — 9-2-25
PLANNING AND ZONING COMMISSION [redacted] CHAIR — DATE

ASHLEY BAILEY, AICP — 9-2-25
DEVELOPMENT SERVICES DIRECTOR — DATE

IN APPROVING THIS PLAT BY THE COMMISSIONERS' COURT OF WILLIAMSON COUNTY, TEXAS, IT IS UNDERSTOOD THAT THE BUILDING OF ALL STREETS, ROADS, AND OTHER PUBLIC THOROUGHFARES AND ANY BRIDGES OR CULVERTS NECESSARY TO BE CONSTRUCTED OR PLACED IS THE RESPONSIBILITY OF THE OWNERS OF THE TRACT OF LAND COVERED BY THIS PLAT IN ACCORDANCE WITH THE PLANS AND SPECIFICATIONS PRESCRIBED BY THE COMMISSIONERS' COURT OF WILLIAMSON COUNTY, TEXAS. SAID COMMISSIONERS' COURT ASSUMES NO OBLIGATION TO BUILD ANY OF THE STREETS, ROADS, OR OTHER PUBLIC THOROUGHFARES SHOWN ON THIS PLAT OR OF CONSTRUCTING ANY OF THE BRIDGES OR DRAINAGE IMPROVEMENTS IN CONNECTION THEREWITH. THE COUNTY WILL ASSUME NO RESPONSIBILITY FOR DRAINAGE WAYS OR EASEMENTS IN THE SUBDIVISION, OTHER THAN THOSE DRAINING OR PROTECTING THE ROAD SYSTEM AND STREETS.

THE COUNTY ASSUMES NO RESPONSIBILITY FOR THE ACCURACY OF REPRESENTATIONS BY OTHER PARTIES IN THIS PLAT. FLOOD PLAIN DATA, IN PARTICULAR, MAY CHANGE DEPENDING ON SUBSEQUENT DEVELOPMENT. IT IS FURTHER UNDERSTOOD THAT THE OWNERS OF THE TRACT OF LAND COVERED BY THIS PLAT MUST INSTALL AT THEIR OWN EXPENSE ALL TRAFFIC CONTROL DEVICES AND SIGNAGE THAT MAY BE REQUIRED BEFORE THE STREETS IN THE SUBDIVISION HAVE FINALLY BEEN ACCEPTED FOR MAINTENANCE BY THE COUNTY.

STATE OF TEXAS §
§ KNOW ALL MEN BY THESE PRESENTS:
COUNTY OF WILLIAMSON §

I, STEVEN SNELL, COUNTY JUDGE OF WILLIAMSON COUNTY, TEXAS, DO HEREBY CERTIFY THAT THIS MAP OR PLAT, WITH FIELD NOTES HEREON, FOR A SUBDIVISION HAVING BEEN FULLY PRESENTED TO THE COMMISSIONERS' COURT OF WILLIAMSON COUNTY, TEXAS, AND BY THE SAID COURT DULY CONSIDERED, WERE ON THIS DAY APPROVED AND THAT THIS PLAT IS AUTHORIZED TO BE REGISTERED AND RECORDED IN THE PROPER RECORDS OF THE COUNTY CLERK OF WILLIAMSON COUNTY, TEXAS.

Steven Snell — 9/23/25
STEVEN SNELL, COUNTY JUDGE — DATE
WILLIAMSON COUNTY, TEXAS

STATE OF TEXAS §
§ KNOW ALL MEN BY THESE PRESENTS:
COUNTY OF WILLIAMSON §

THAT I, NANCY E. RISTER, CLERK OF THE COUNTY COURT OF SAID COUNTY, DO HEREBY CERTIFY THAT THE FOREGOING INSTRUMENT IN WRITING, WITH ITS CERTIFICATION OF AUTHENTICATION, WAS FILED FOR RECORD IN MY OFFICE ON THE 24th DAY OF September A.D., 2025 AT 3:00 O'CLOCK P M., AND DULY RECORDED THIS THE 24th DAY OF September A.D., 2025 AT 3:00 O'CLOCK, P M. IN THE OFFICIAL PUBLIC RECORDS OF SAID COUNTY IN INSTRUMENT NO. 2025075547.

TO CERTIFY WHICH, WITNESS MY HAND AND SEAL AT THE COUNTY COURT OF SAID COUNTY, AT MY OFFICE IN GEORGETOWN, TEXAS, THE DATE LAST SHOWN ABOVE WRITTEN.

NANCY E. RISTER, CLERK COUNTY COURT
WILLIAMSON COUNTY, TEXAS

BY: Ashley Maxey, Deputy
DEPUTY

COUNTY COURT
WILLIAMSON COUNTY, TEXAS

FINAL PLAT
HERITAGE MILL NORTH SECTION 1

A SUBDIVISION OF 38.163 ACRES OF LAND LOCATED IN THE WILLIAM GATLIN, SURVEY NO. 23, ABSTRACT 271, WILLIAMSON COUNTY, TEXAS

BGE, Inc.
7330 San Pedro Ave., Suite 301
San Antonio, TX 78216
Tel: 210-581-3600 • www.bgeinc.com
TBPELS Registration No. F-1046
TBPELS Licensed Surveying Firm No. 10106500

Document
Unofficial
Doc #2025075547

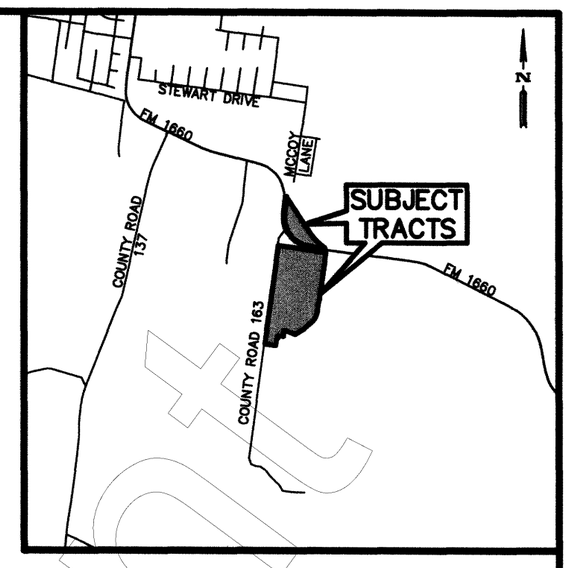

OWNER(S):
DOMAIN TIMBERLAKE MULTISTATE, LLC
590 MADISON AVE 13TH FL
NEW YORK, NEW YORK 10022
(512)334-6775

S&H HUTTO INVESTMENTS LLC
4408 SPICEWOOD SPRING
AUSTIN, TEXAS 78759
(512)596-6544

ENGINEER:
BGE, INC.,
TBPE F-1046
7330 SAN PEDRO AVE., SUITE 202
SAN ANTONIO, TEXAS 78216
(210)581-3600

WILLIAMSON COUNTY SUBMITTAL DATE: 7/28/2025

LAND USE SCHEDULE		
DESCRIPTION	NO.	ACREAGE
RESIDENTIAL	130	16.129 AC.
OPEN SPACE	5	1.245 AC.
GREEN LINK & DRAINAGE	1	0.058 AC.
GREEN LINK & EASEMENT	1	0.087 AC.
OPEN SPACE & DRAINAGE	1	0.800 AC.
MIXED USE	2	5.061 AC.
AMENITY	1	3.441 AC.
POND/OPEN SPACE	1	1.664 AC.
RIGHT-OF-WAY	–	8.844 AC.
RIGHT-OF-WAY DEDICATION	–	0.834 AC.
TOTAL	142	38.163 AC.



FINAL PLAT
HERITAGE MILL NORTH SECTION 1

A SUBDIVISION OF 38.163 ACRES OF LAND LOCATED IN THE WILLIAM GATLIN, SURVEY NO. 23, ABSTRACT 271, WILLIAMSON COUNTY, TEXAS

BGE, Inc.
7330 San Pedro Ave., Suite 301
San Antonio, TX 78216
Tel: 210-581-3600 • www.bgeinc.com
TBPELS Registration No. F-1046
TBPELS Licensed Surveying Firm No. 10106500

Unofficial Document
Doc#2025075547

Gray Civil, Inc.

Title: Heritage Mill Ph.1 Final Cost & Quantities
Description: Water, and Wastewater
Location: City of Hutto, Williamson County, Texas
Owner: Brohn Homes

Water Improvements

Item	Description	Unit	Quantity	Unit Price	Cost
PH1 - 1	4" PVC C-900 Cl 150 Waterline, Including Appurtenances, All Depths, Per Linear Foot, (Complete and in place) CIP	LF	63	$ 105.00	$ 6,615.00
PH1 - 2	8" PVC C-900 Cl 200 Waterline, Including Appurtenances, All Depths, Per Linear Foot, CIP	LF	4,486	$ 63.00	$ 282,618.00
PH1 - 3	12" PVC C-900 Cl 200 Waterline, Including Appurtenances, All Depths, Per Linear Foot, CIP	LF	984	$ 114.00	$ 112,176.00
PH1 - 4	8" Ductile Iron Waterline, Including Appurtenances, All Depths, Per Linear Foot, CIP	LF	25	$ 273.00	$ 6,825.00
PH1 - 5	18" Steel Encasement, Per Linear Foot, CIP	LF	40	$ 164.00	$ 6,560.00
PH1 - 6	24" Steel Encasement, Per Linear Foot, CIP	LF	34	$ 211.00	$ 7,174.00
PH1 - 7	4" Gate Valve with Box and Cover, Per Each, CIP	EA	1	$ 1,670.00	$ 1,670.00
PH1 - 8	8" Gate Valve with Box and Cover, Per Each, CIP	EA	21	$ 2,570.00	$ 53,970.00
PH1 - 9	12" Gate Valve with Box and Cover, Per Each, CIP	EA	3	$ 4,450.00	$ 13,350.00
PH1 - 10	Automatic Flushing Valve, Per Each, CIP	EA	4	$ 6,190.00	$ 24,760.00
PH1 - 11	1.5" Irrigation Meter, Per Each, CIP	EA	1	$ 2,610.00	$ 2,610.00
PH1 - 12	5/8" Irrigation Meter, Per Each, CIP	EA	3	$ 2,010.00	$ 6,030.00
PH1 - 13	Fire Hydrant Assembly, Per Each, CIP	EA	10	$ 7,780.00	$ 77,800.00
PH1 - 14	Single Water Service, Per Each, CIP	EA	23	$ 1,920.00	$ 44,160.00
PH1 - 15	Double Water Service, Per Each, CIP	EA	54	$ 1,960.00	$ 105,840.00
PH1 - 16	Trench Safety System, Per Linear Foot, CIP	LF	5,558	$ 0.50	$ 2,779.00
PH 1 - CO #01	8" PVC C-900 Cl 200 Waterline, Including Appurtenances, All Depths, Per Linear Foot, CIP	LF	(43)	$ 63.00	$ (2,709.00)
PH 1 - CO #01	8" Ductile Iron Waterline, Including Appurtenances, All Depths, Per Linear Foot, CIP	EA	75	$ 273.00	$ 20,475.00
PH 1 - CO #01	12" Gate Valve with Box and Cover, Per Each, CIP	EA	1	$ 4,450.00	$ 4,450.00
PH 1 - CO #01	Air Release Valve, Per Each, CIP	EA	4	$ 2,850.00	$ 11,400.00
PH 1 - CO #01	16" Steel Encasement, Per Linear Foot, CIP	EA	40	$ 145.00	$ 5,800.00
PH 1 - CO #03	6" Schedule 40 PVC Sleeves, Per Linear Foot, CIP	LF	550	$ 28.00	$ 15,400.00
Com-01	8" PVC C-900 Cl 200 Waterline, Including Appurtenances, All Depths, Per Linear Foot, CIP	LF	733	$ 63.00	$ 46,179.00
Com-02	12" PVC C-900 Cl 200 Waterline, Including Appurtenances, All Depths, Per Linear Foot, CIP	LF	927	$ 114.00	$ 105,678.00
Com-03	Bore 12" Ductile Iron Waterline, Including Pits, encasement pipe, end seals, spacers, etc., Per Linear Foot, CIP	LF	76	$ 856.00	$ 65,056.00
Com-04	18" Steel Encasement, Per Linear Foot, CIP	LF	12	$ 164.00	$ 1,968.00
Com-05	24" Steel Encasement, Per Linear Foot, CIP	LF	20	$ 211.00	$ 4,220.00
Com-06	8" Gate Valve with Box and Cover, Per Each, CIP	EA	5	$ 2,570.00	$ 12,850.00
Com-07	12" Gate Valve with Box and Cover, Per Each, CIP	EA	5	$ 4,450.00	$ 22,250.00
Com-08	Automatic Flushing Valve, Per Each, CIP	EA	1	$ 6,190.00	$ 6,190.00
Com-09	12" Wet Connection, Including Dewatering, Fittings, etc., Per Each, CIP	EA	1	$ 2,710.00	$ 2,710.00
Com-10	Connect to Existing 16", Including Tapping Sleeve, Valve, etc., Per Each, CIP	EA	1	$ 9,630.00	$ 9,630.00
Com-11	Air Release Valve, Per Each, CIP	EA	1	$ 2,850.00	$ 2,850.00
Com-12	Bac-T Sampling Station, Including Concrete Pad, Valves, etc., Per Each, CIP	EA	1	$ 2,340.00	$ 2,340.00
Com-13	Fire Hydrant Assembly, Per Each, CIP	EA	5	$ 7,780.00	$ 38,900.00
Com-14	2" Irrigation Meter, Per Each, CIP	EA	1	$ 2,800.00	$ 2,800.00
Com-15	10" Schedule 40 PVC Sleeves, Per Linear Foot, CIP	LF	61	$ 55.00	$ 3,355.00
Com-16	6" Schedule 40 PVC Sleeves, Per Linear Foot, CIP	LF	658	$ 28.00	$ 18,424.00
Com-17	Trench Safety System, Per Linear Foot, CIP	LF	1,660	$ 0.50	$ 830.00
CO #01	8" PVC C-900 Cl 200 Waterline, Including Appurtenances, All Depths, Per Linear Foot, CIP	LF	(75)	$ 63.00	$ (4,725.00)
CO #01	12" PVC C-900 Cl 200 Waterline, Including Appurtenances, All Depths, Per Linear Foot, CIP	LF	(147)	$ 114.00	$ (16,758.00)
CO #01	8" Ductile Iron Waterline, Including Appurtenances, All Depths, Per Linear Foot, CIP	LF	75	$ 273.00	$ 20,475.00
CO #01	12" Ductile Iron Waterline, Including Appurtenances, All Depths, Per Linear Foot, CIP	LF	125	$ 284.00	$ 35,500.00
CO #01	Fire Hydrant Assembly, Per Each, CIP	EA	1	$ 7,780.00	$ 7,780.00
CO #01	10" Schedule 40 PVC Sleeves, Per Linear Foot, CIP	LF	(61)	$ 55.00	$ (3,355.00)
CO #01	18" Steel Encasement, Per Linear Foot, CIP	LF	61	$ 157.00	$ 9,577.00
CO #06	Drain and Demo 16" Waterline, Per Linear Foot, CIP	LF	60	$ 38.50	$ 2,310.00
CO #06	Reinstall existing 16" PVC Waterline, Per Linear Foot, CIP	LF	60	$ 359.75	$ 21,585.00
CO #06	Drain and Demo 16" Waterline, Per Linear Foot, CIP	LF	330	$ 38.50	$ 12,705.00
CO #06	Reinstall existing 16" PVC Waterline, Per Linear Foot, CIP	LF	330	$ 160.00	$ 52,800.00
CO #06	Spilt Steel Encasement for Existing Waterline, Per Linear Foot, CIP	LF	(40)	$ 447.00	$ (17,880.00)
CO #06	Spilt Casing Material, Per Lump Sum, CIP	LS	1	$ 5,000.00	$ 5,000.00
				WATER IMPROVEMENTS	**$ 1,280,997.00**

Wastewater Improvements

Item	Description	Unit	Quantity	Unit Price	Cost
Ph 1 - 1	8" PVC SDR-26 Wastewater Line (0'-8' Depths), Including Appurtenances, Per Linear Foot, CIP	LF	422	$ 53.00	$ 22,366.00
Ph 1 - 2	8" PVC SDR-26 Wastewater Line (8'-10' Depths), Including Appurtenances, Per Linear Foot, CIP	LF	1,030	$ 64.00	$ 65,920.00
Ph 1 - 3	8" PVC SDR-26 Wastewater Line (10'-12' Depths), Including Appurtenances, Per Linear Foot, CIP	LF	1,076	$ 98.00	$ 105,448.00
Ph 1 - 4	8" PVC SDR-26 Wastewater Line (12'-14' Depths), Including Appurtenances, Per Linear Foot, CIP	LF	156	$ 90.00	$ 14,040.00
Ph 1 - 5	8" PVC SDR-26 Wastewater Line (14'-16' Depths), Including Appurtenances, Per Linear Foot, CIP	LF	640	$ 116.00	$ 74,240.00
Ph 1 - 6	8" PVC SDR-26 Wastewater Line (16'-18' Depths), Including Appurtenances, Per Linear Foot, CIP	LF	204	$ 169.00	$ 34,476.00
Ph 1 - 7	8" PVC 160 Pressure Line (All Depths), Including Appurtenances, Per Linear Foot, CIP	LF	140	$ 120.00	$ 16,800.00
Ph 1 - 8	4' Dia. Standard Wastewater Manhole, Per Each, CIP	EA	12	$ 5,910.00	$ 70,920.00
Ph 1 - 9	4' Dia. Drop Wastewater Manhole, Per Each, CIP	EA	2	$ 7,450.00	$ 14,900.00
Ph 1 - 10	Extra Depth 4' Dia. Manhole Extensions, Per Vertical Linear Foot, CIP	EA	44	$ 270.00	$ 11,880.00
Ph 1 - 11	Single Wastewater Service, All Lengths, Per Each, CIP	EA	21	$ 2,080.00	$ 43,680.00
Ph 1 - 12	Double Wastewater Service, All Lengths, Per Each, CIP	EA	55	$ 2,600.00	$ 143,000.00
Ph 1 - 13	Trench Safety System, Per Linear Foot, CIP	EA	3,688	$ 2.00	$ 7,376.00
PH 1 - CO #03	Extending Wastewater Services, Per Linear Foot, CIP	LF	630	$ 47.00	$ 29,610.00
PH 1 - CO #03	Added Manhole Risers to WWL T & U, Per Lump Sum, CIP	LS	1	$ 3,525.00	$ 3,525.00
COM - 1	8" PVC SDR-26 Wastewater Line (12'-14' Depths), Including Appurtenances, Per Linear Foot, CIP	LF	225	$ 90.00	$ 20,250.00
COM - 2	8" PVC SDR-26 Wastewater Line (14'-16' Depths), Including Appurtenances, Per Linear Foot, CIP	LF	269	$ 116.00	$ 31,204.00
COM - 3	8" PVC SDR-26 Wastewater Line (16'-18' Depths), Including Appurtenances, Per Linear Foot, CIP	LF	20	$ 169.00	$ 3,380.00
COM - 4	8" PVC SDR-26 Wastewater Line (18'-20' Depths), Including Appurtenances, Per Linear Foot, CIP	LF	20	$ 605.00	$ 12,100.00
COM - 5	8" PVC SDR-26 Wastewater Line (20'-22' Depths), Including Appurtenances, Per Linear Foot, CIP	LF	121	$ 204.00	$ 24,684.00
COM - 6	8" PVC 160 Pressure Line (All Depths), Including Appurtenances, Per Linear Foot, CIP	LF	20	$ 120.00	$ 2,400.00
COM - 7	12" PVC SDR-26 Wastewater Line (16'-18' Depths), Including Appurtenances, Per Linear Foot, CIP	LF	623	$ 150.00	$ 93,450.00
COM - 8	12" PVC SDR-26 Wastewater Line (18'-20' Depths), Including Appurtenances, Per Linear Foot, CIP	LF	931	$ 183.00	$ 170,373.00
COM - 9	12" PVC SDR-26 Wastewater Line (20'-22' Depths), Including Appurtenances, Per Linear Foot, CIP	LF	1,779	$ 180.00	$ 320,220.00
COM - 10	12" PVC 160 Pressure Line (All Depths), Including Appurtenances, Per Linear Foot, CIP	LF	60	$ 156.00	$ 9,360.00
COM - 11	15" PVC SDR-26 Wastewater Line (14'-16' Depths), Including Appurtenances, Per Linear Foot, CIP	LF	636	$ 168.00	$ 106,848.00
COM - 12	15" PVC SDR-26 Wastewater Line (16'-18' Depths), Including Appurtenances, Per Linear Foot, CIP	LF	792	$ 179.00	$ 141,768.00
COM - 13	15" PVC SDR-26 Wastewater Line (18'-20' Depths), Including Appurtenances, Per Linear Foot, CIP	LF	431	$ 189.00	$ 81,459.00
COM - 14	15" PVC SDR-26 Wastewater Line (20'-22' Depths), Including Appurtenances, Per Linear Foot, CIP	LF	1,120	$ 248.00	$ 277,760.00
COM - 15	4' Dia. Standard Wastewater Manhole, Per Each, CIP	EA	4	$ 5,910.00	$ 23,640.00
COM - 16	4' Dia. Drop Wastewater Manhole, Per Each, CIP	EA	2	$ 7,450.00	$ 14,900.00
COM - 17	4' Dia. Bolted & Gasketed Wastewater Manhole, Per Each, CIP	EA	6	$ 6,350.00	$ 38,100.00
COM - 18	5' Dia. Standard Wastewater Manhole, Per Each, CIP	EA	1	$ 8,060.00	$ 8,060.00
COM - 19	5' Dia. Bolted & Gasketed Wastewater Manhole, Per Each, CIP	EA	13	$ 8,190.00	$ 106,470.00
COM - 20	5' Dia. Bolted & Gasketed Drop Wastewater Manhole, Per Each, CIP	EA	4	$ 10,000.00	$ 40,000.00
COM - 21	Extra Depth 4' Dia. Manhole Extensions, Per Vertical Linear Foot, CIP	VLF	115	$ 270.00	$ 31,050.00
COM - 22	Extra Depth 5' Dia. Manhole Extensions, Per Vertical Linear Foot, CIP	VLF	232	$ 424.00	$ 98,368.00
COM - 23	Service Stud for Future, Including wyes and "Stack" to Finished Grade, Per Each, CIP	EA	18	$ 1,730.00	$ 31,140.00
COM - 24	Trench Safety System, Per Linear Foot, CIP	LF	7,027	$ 2.00	$ 14,054.00
CO #01	15" PVC SDR-26 Wastewater Line (14'-16' Depths), Including Appurtenances, Per Linear Foot, CIP	LF	8	$ 168.00	$ 1,344.00
CO #01	15" PVC SDR-26 Wastewater Line (16'-18' Depths), Including Appurtenances, Per Linear Foot, CIP	LF	(184)	$ 179.00	$ (32,936.00)
CO #01	15" PVC SDR-26 Wastewater Line (18'-20' Depths), Including Appurtenances, Per Linear Foot, CIP	LF	49	$ 189.00	$ 9,261.00
CO #01	15" PVC SDR-26 Wastewater Line (20'-22' Depths), Including Appurtenances, Per Linear Foot, CIP	LF	81	$ 248.00	$ 20,088.00
CO #01	15" PVC SDR-26 Wastewater Line (22'-24' Depths), Including Appurtenances, Per Linear Foot, CIP	LF	46	$ 295.00	$ 13,570.00
CO #01	Extra Depth 4' Dia. Manhole Extensions, Per Vertical Linear Foot, CIP	LF	4	$ 270.00	$ 1,080.00
CO #01 - ADD/ALT	Bore 12" Wastewater Line, Per Lump Sum, CIP	LS	110	$ 741.00	$ 81,510.00
CO #01 - ADD/ALT	Protect Gas Easement Crossing - Special Timber mats - (exclude silt fence), Per Linear Foot, CIP	LS	1	$ 120,000.00	$ 120,000.00
CO #02	Bore 12" WWL (20'-22') Wastewater Line, Per Linear Foot, CIP	LF	350	$ 731.00	$ 255,850.00
CO #02	12" PVC SDR-26 Wastewater Line (20'-22' Depths), Including Appurtenances, Per Linear Foot, CIP	LF	(350)	$ 180.00	$ (63,000.00)
CO #06	Relocate 8" Wastewater Line (Including cutting, capping and coring new hole), Per Linear Foot, CIP	LF	80	$ 121.00	$ 9,680.00
CO #06	Support Forcemain with Bracing & Restraints, Per Lump Sum, CIP	LS	1	$ 10,580.00	$ 10,580.00
CO #06	Relocate Existing Forcemain, Per Each, CIP	EA	(1)	$ 59,000.00	$ (59,000.00)
CO #08	Bedding for Ground Water Remediation (with Filter Fabric), Per Linear Foot, CIP	LF	395	$ 85.00	$ 33,575.00
				WASTEWATER IMPROVEMENTS	$ 2,760,821.00

TOTAL FOR ALL IMPROVEMENTS	$ 4,041,818.00

Maintenance Bond Holder	Percent	Duration	Bond Amount
City of Hutto	100%	2 Years	$ 4,041,818.00

STATE OF TEXAS
SCOTT A. SWIDERSKI
94338
LICENSED
PROFESSIONAL ENGINEER

6-19-26

AGENDA ITEM REPORT
10.5.

To:	City Council
Subject:	Consideration and possible action on Resolution No. R-2026-178 accepting the infrastructure improvements for the traffic signal at Innovation and Limmer Loop on (CIP T13-2024). (Kate Moriarty)
Meeting:	Thursday, September 3, 2026
Department:	Engineering /
Staff Contact:	Kate Moriarty

ITEM SUMMARY:

This project is located in the North-west section of Hutto and consists of infrastructure acceptance of Traffic Signal construction with the Innovation and Limmer Loop Intersection improvements. The final inspection by staff accepts this infrastructure, including supporting documentation. Infrastructure documents include maintenance bonds, cost summary, areas approved and itemized infrastructure.

STAFF RECOMMENDATION:

Staff has reviewed, approved and recommended acceptance of this private development project.

FISCAL NOTES:

No financial impact from acceptance of infrastructure improvements. Engineering has confirmed that maintenance bonds have been received and provided to City Secretary for recordkeeping.

ATTACHMENTS:

1. Innovation_at_Limmer_Loop_map
2. DJI_0162 (2)
3. 20260824 Hutto RES Limmer Loop Innovation JE
4. 2026-05-19 Construction Close Out Documents Meeting Minutes
5. Affidavit all bills paid
6. Bond - Maintenance (exec)
7. Final CIP Checklist 1
8. Hutto - Project #23-05E-002 - As-Builts (2026-06-26)
9. Hutto Const Summary (T13-2024)
10. Innovation_at_Limmer_Loop_map
11. Punch list
12. T13-2024 - Engineer Concurrence Letter
13. T13-2024 - Final Cost and Quantities

AGENDA ITEM REPORT
10.5.

Innovation at Limmer Loop - Traffic Signal

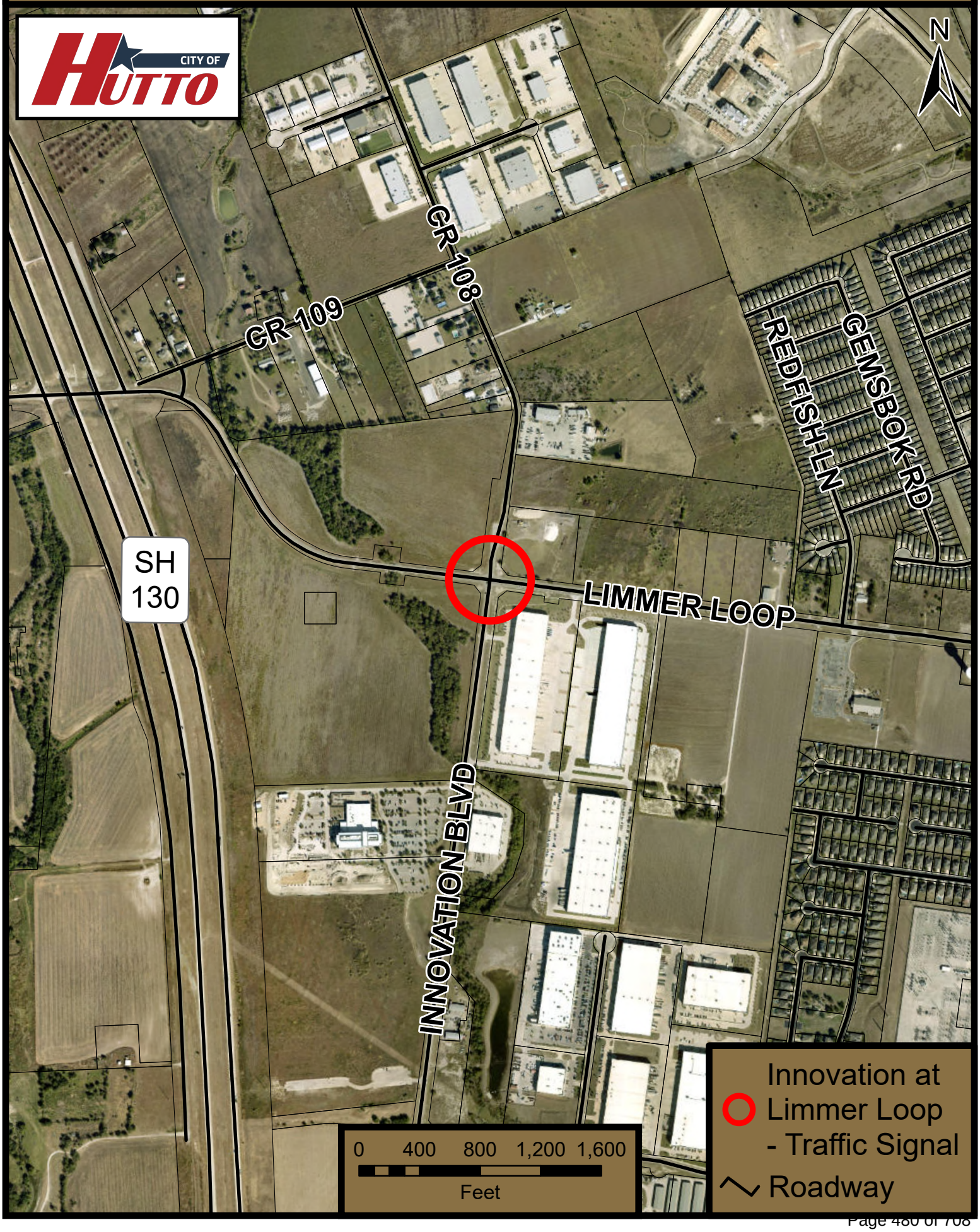


Limmer Lp
Limmer Lp
Limmer Lp
STOP

RESOLUTION NO. R-2026-XXX

A RESOLUTION OF THE CITY OF HUTTO, TEXAS, APPROVING INFRASTRUCTURE IMPROVEMENTS FOR THE PROJECT KNOWN AS LIMMER LOOP AND INNOVATION BLVD TRAFFIC SIGNALS IN THE CITY OF HUTTO, WILLIAMSON COUNTY; PROVIDING PROPER NOTICE AND MEETING, AND PROVIDING AN EFFECTIVE DATE.

WHEREAS, the public infrastructure improvements for Limmer Loop and Innovation Blvd Traffic Signals project have been constructed and are ready for acceptance; and

WHEREAS, a final inspection was conducted by the City Construction Inspection and Public Works staff on all streets, sidewalks, ramps, drainage, water, and wastewater improvements; and

WHEREAS, Liberty Mutual Insurance Company submitted warranty bonds to cover the traffic lights for two years.

NOW, THEREFORE, BE IT RESOLVED BY THE CITY COUNCIL OF THE CITY OF HUTTO, TEXAS, THAT:

SECTION 1: The findings set forth in the recitals of this Resolution are hereby found to be true and correct and are hereby adopted as findings of the City Council and are incorporated into the body of this Resolution as if fully set forth herein.

SECTION 2: That the Hutto City Council hereby approves and authorizes the City Manager to accept the infrastructure and enter into a two-year maintenance period.

SECTION 3: The City Council hereby finds and declares that written notice of the date, hour, place and subject of the meeting at which this Resolution was adopted was posted and that such meeting was open to the public as required by law at all times during which this Resolution and the subject matter hereof were discussed, considered and formally acted upon, all as required by the Open Meetings Act, Chapter 551, Texas Government Code, as amended.

SECTION 4: This Resolution shall take effect immediately upon its passage.

PASSED & APPROVED by the CITY COUNCIL of the CITY OF HUTTO, on the 3rd day of September 2026 on vote of __AYES; ___NAYS; __ABSTENTIONS

CITY OF HUTTO, TEXAS

_____
Mike Snyder, Mayor

ATTEST:

_____
Laura Hallmark, City Secretary

Meeting Agenda

Meeting Title: Construction Closeout Documents Meeting
Client Project ID: T13-2024
Date: May 19, 2026
Time: 9:30 AM – 10:00 AM

Attendees:

Name	Organization	Email
Todd Meaker	City of Hutto	Todd.Meaker@HuttoTX.gov
Shahanaz Sultana	City of Hutto	Shahanaz.Sultana@HuttoTX.gov
Elliot Cude	JMT	ECude@JMT.com
Gerard Falguera	Elecnor Belco	gfalguera@elecnor.com
Pau Pardo	Elecnor Belco	ppardo@elecnor.com

T13-2024 (TRAFFIC SIGNAL) AGENDA ITEMS:

1. **Final Cost and Quantities (Excel Document):**
    a. Should more categories be added, such as signals and pavement markings?
        i. Not at this time.
    b. Whose company letterhead goes at the top? The engineer or the contractor?
        i. No preference on whose letterhead is at the top. What's important is that they have the form.
    c. Regarding cost:
        i. Removed item: block sodding
            1. Should not include any items removed from the project, such as block sodding.
        ii. Change order costs not reflected yet
        iii. Final cost will reflect the cost in the maintenance bond.
    d. Change orders:
        i. Elecnor resubmitted change order documents on 5/5/2026.
        ii. Todd and team will get together internally to discuss it so that final cost and quantities can be determined.
        iii. Elecnor also submitted a timeline for the change orders in the same email. It came from Gerard with Elecnor.

2. **Hutto Construction Summary (Word Document):**
    a. Very little of this document appears to need to be filled out for this type of project, since there was no utility, road, or drainage work.
    b. Final acceptance date is currently listed as TBD until that date is given.
    c. Regarding cost:
        i. Same issues as above.

3. **Hutto Maintenance Bond Form (Word Document):**
    a. Confirming that this is a form that the contractor will fill out.
        i. Dollars will reflect the same as the costs above and will be determined after the City discusses change orders.

4. **Final CIP Project Checklist (PDF Document):**
    a. Project Construction Summary Document
    b. Engineer's Concurrence Letter
    c. As-built Reproducible Plans
        i. Only item not documented is specific location of the underground meter rack. We have mark ups of the approximate location.
    d. Map Showing Area Being Accepted
        i. Is a PDF of map on a memo style document acceptable?
            1. Todd has this internally already.
    e. Affidavit of all bills paid: if we don't have one, ask Todd and he'll share one.
    f. Punch List is done and checked off by Todd.

FINAL BILLS PAID AFFIDAVIT
BY CONTRACTOR

BEFORE ME, the undersigned authority, personally appeared as Gerard Falguera Mayoral (Name), known to me to be a credible person, and after being by me duly sworn, upon oath stated and affirmed that: "My name is Gerard Falguera Mayoral (Name) and I am the Project Manager (Title) of Elecnor Belco Electric Inc (Firm)", hereafter referred to in this affidavit as "Contractor". Contractor's business address is 4766 TX -123 Suite 600, San Marcos (Address) Texas, 78666 (Zip). The undersigned Contractor has personal knowledge of the facts stated herein and has full authority to make the agreements in this affidavit on behalf of Contractor.

Pursuant to and in accordance with a written contract between Contractor and City of Hutto, collectively referred to as Owner, Contractor furnished materials and labor for the construction, renovation, installation or repair of certain improvements (the "Improvements") as indicated in City of Hutto Project No. CIP T13-2024 (Project Number).

All work provided for under said written construction contract, together with all changes and supplements thereto, has been fully completed in accordance with the terms and provisions of said contract, except for Item Nos. 2,5,21-32,46 on the annexed *Contractor's Progress Estimate* which remained pending as of February 11, 2026. Contractor further reserves any and all rights in connection with requests for change orders relating to Contractor's T&M work in connection with electrical service and extra and additional work relating to ILSNs on the Project.

Contractor has paid each of its subcontractors, laborers, suppliers and materialmen in full for all labor and materials provided to Contractor for or in connection with the construction, renovation, or repair of the Improvements.

Contractor is not aware of any unpaid bills, claims, demands, or causes of action by any of its subcontractors, laborers, manufacturers, suppliers, or materialmen for or in connection

with the furnishing of labor materials, or both, for the construction, renovation, or repair of the Improvements.

Contractor further understands that this Final Bills Paid Affidavit is being given pursuant to and in accordance with Section 53.085 of the Texas Property Code and that the intentional, knowing, or reckless making of a false or misleading statement in this Affidavit constitutes an offense under said Section and is a Class A misdemeanor.

CONTRACTOR HEREBY INDEMNIFIES AND HOLDS HARMLESS THE CITY OF HUTTO FROM ANY AND ALL CLAIMS, DEMANDS OR CAUSES OF ACTION, AND ANY COSTS, EXPENSES, AND ATTORNEY'S FEES INCURRED IN CONNECTION THEREWITH, ARISING FROM OR CONNECTED WITH, THE STATEMENTS AND REPRESENTATIONS CONTAINED HEREIN.

EXECUTED this 6th day of March, 20 26.

CONTRACTOR:

By: G Falguera

Name: Gerard Falguera

Title: Project Manager

Notary's Acknowledgement

Before me, the undersigned authority, on this day personally appeared Gerard Falguera, who first being duly sworn by me to be the person whose name is subscribed to the foregoing Final Bills Paid Affidavit, acknowledged that he/she has the authority to make this Final Bills Paid Affidavit, and further acknowledged to me that he/she executed the same for the purpose and consideration therein expressed.

GIVEN UNDER MY HAND AND SEAL OF OFFICE on this the 10th day of March, 2026.

Mira Lynn Rodriguez Herrera
My Commission Expires
3/3/2029
Notary ID126131400

Mira Lynn Rodriguez Herrera

CITY OF HUTTO
MAINTENANCE BOND
BOND No. 015227342M

THE STATE OF TEXAS §
§
COUNTY OF WILLIAMSON §

KNOW ALL MEN BY THESE PRESENTS,

That, Elecnor Belco Electric, Inc., corporation, a [corporation, limited partnership, etc.] having a principal place of business at 14320 Albers Way, Chino, CA 91710, as Principal and Liberty Mutual Insurance Company, a corporation authorized to issue surety bonds in the State of Texas, and having an office and place of business in Texas at 175 Berkeley Street, Boston, MA 02116, as Surety, are held and firmly bound unto the CITY OF HUTTO, TEXAS, a home-rule municipal corporation organized under the laws of the State of Texas with principal administrative offices at Hutto City Hall, 500 West Live Oak Street, Hutto, Texas 78634 in Williamson County, Texas, as Obligee, in the sum of Four Hundred Eleven Thousand Seven Hundred Twenty-Five and 21/100 DOLLARS ($411,725.21) lawful money of the United States, for the payment whereof to the Obligee, the Principal and the Surety bind themselves, their heirs, executors, administrators, successors, and assigns, jointly and severally, firmly to these presents:

WHEREAS, Principal is responsible for the completion of Traffic Signals located at Limmer Loop and Innovation Blvd, Hutto Project Number T13-2024 (City of Hutto) - 2 YEAR 100% MAINTENANCE BOND in Williamson County, Texas (the "Work"), [as per the map or plat thereof recorded in _____ of the Deed Records of Williamson County, Texas under Williamson County Clerk File Number and ;][under a certain contract between Principal and Obligee for said Work approved by the Hutto City Council by the attached Resolution;

WHEREAS, Principal has certified in writing to Obligee that all required Work has been completed in accordance with the approved construction plans and Obligee's applicable standards and specifications;

WHEREAS, Principal has requested that the City of Hutto, Texas acknowledge completion and acceptance of the Work as provided by the Code of Ordinances of the City of Hutto, Texas, the issuance of such certificate being subject to the requirement that Principal shall correct all defects within publicly dedicated improvements and Work done for the benefit of Obligee that occur within two (2) years of the date of the acceptance of the Work;

WHEREAS, under the terms of the specifications for the Work, Principal is required to give a bond equal to 100% of the amount of the contract to protect the Obligee against the result of faulty materials or workmanship for a period of 24 months after acceptance of the Work; and

WHEREAS, this Bond is intended as satisfying that bonding obligation of Principal to Obligee.

NOW, THEREFORE, THE CONDITION OF THIS OBLIGATION is such that if the above-

named Principal shall correct any defects to the Work within 2 years from the date of the issuance of the above-described certificate of completion, then this obligation is to be void; otherwise, to remain in full force and effect.

It is hereby understood and agreed that if Principal shall fail to correct any defects in the required improvements as required by such ordinances and regulations, then the [Planning Commission of the City of Hutto, Texas][the Obligee] may thereupon declare this bond to be in default and collect the sum remaining payable thereunder and upon receipt of the proceeds thereof, the Obligee may install or repair such improvements as are covered by this bond.

IN WITNESS WHEREOF, the said Principal and Surety have signed and sealed this instrument this 30th **day of** June **20** 26.

Elecnor Belco Electric, Inc.
Principal

By:
Title: John Wong, Exec. V.P.
Address: 14320 Albers Way
Chino, CA 91710

Liberty Mutual Insurance Company
Surety

By:
Title: Malerie Janet Williams, Attorney-in-Fact
Address: 10 State House Square, Floor 11
Hartford, CT 06103

The name and address of the Resident Agent of Surety in Williamson County, Texas, is:
N/A

CALIFORNIA ALL- PURPOSE CERTIFICATE OF ACKNOWLEDGMENT

A notary public or other officer completing this certificate verifies only the identity of the individual who signed the document to which this certificate is attached, and not the truthfulness, accuracy, or validity of that document.

State of California }

County of San Bernardino }

On 7/1/26 before me, Rebecca Wilks, Notary Public
(Here insert name and title of the officer),

personally appeared John Wong,
who proved to me on the basis of satisfactory evidence to be the person(~~s~~) whose name(~~s~~) (is)/are subscribed to the within instrument and acknowledged to me that (he)/she/they executed the same in (his)/her/their authorized capacity(~~ies~~), and that by (his)/her/their signature(~~s~~) on the instrument the person(~~s~~), or the entity upon behalf of which the person(~~s~~) acted, executed the instrument.

I certify under PENALTY OF PERJURY under the laws of the State of California that the foregoing paragraph is true and correct.

WITNESS my hand and official seal.

Notary Public Signature

(Notary Public Seal)

REBECCA WILKS
Commission # 2462475
Notary Public - California
San Bernardino County
My Comm. Expires Sep. 9, 2027

ADDITIONAL OPTIONAL INFORMATION

DESCRIPTION OF THE ATTACHED DOCUMENT

(Title or description of attached document)

(Title or description of attached document continued)

Number of Pages _____ Document Date_____

CAPACITY CLAIMED BY THE SIGNER

- ☐ Individual (s)
- ☐ Corporate Officer

(Title)

- ☐ Partner(s)
- ☐ Attorney-in-Fact
- ☐ Trustee(s)
- ☐ Other _____

www.NotaryClasses.com 800-873-9865

INSTRUCTIONS FOR COMPLETING THIS FORM

This form complies with current California statutes regarding notary wording and, if needed, should be completed and attached to the document. Acknowledgments from other states may be completed for documents being sent to that state so long as the wording does not require the California notary to violate California notary law.

- State and County information must be the State and County where the document signer(s) personally appeared before the notary public for acknowledgment.
- Date of notarization must be the date that the signer(s) personally appeared which must also be the same date the acknowledgment is completed.
- The notary public must print his or her name as it appears within his or her commission followed by a comma and then your title (notary public).
- Print the name(s) of document signer(s) who personally appear at the time of notarization.
- Indicate the correct singular or plural forms by crossing off incorrect forms (i.e. ~~he~~/she/~~they,~~ is /~~are~~) or circling the correct forms. Failure to correctly indicate this information may lead to rejection of document recording.
- The notary seal impression must be clear and photographically reproducible. Impression must not cover text or lines. If seal impression smudges, re-seal if a sufficient area permits, otherwise complete a different acknowledgment form.
- Signature of the notary public must match the signature on file with the office of the county clerk.
  - ❖ Additional information is not required but could help to ensure this acknowledgment is not misused or attached to a different document.
  - ❖ Indicate title or type of attached document, number of pages and date.
  - ❖ Indicate the capacity claimed by the signer. If the claimed capacity is a corporate officer, indicate the title (i.e. CEO, CFO, Secretary).
- Securely attach this document to the signed document with a staple.

Liberty Mutual SURETY

POWER OF ATTORNEY

Liberty Mutual Insurance Company
The Ohio Casualty Insurance Company
West American Insurance Company

Certificate No: **8215803 - 985949**

KNOWN ALL PERSONS BY THESE PRESENTS: That The Ohio Casualty Insurance Company is a corporation duly organized under the laws of the State of New Hampshire, that Liberty Mutual Insurance Company is a corporation duly organized under the laws of the State of Massachusetts, and West American Insurance Company is a corporation duly organized under the laws of the State of Indiana (herein collectively called the "Companies"), pursuant to and by authority herein set forth, does hereby name, constitute and appoint, Alec Steinfeldt, Ashley Alexis, Chad Warren Johnson, Danielle M. Bechard, Doritza Mojica, Emma Pulley, Haley Pulley, Jason Martin, Jonathan Gleason, Kaden Tate, Katelyn Gingras, Kyle Williams, Liam Russell, Malerie Janet Williams, Michael DiPiro, Michelle Anne McMahon, Stacyann Morrison

all of the city of Hartford state of CT each individually if there be more than one named, its true and lawful attorney-in-fact to make, execute, seal, acknowledge and deliver, for and on its behalf as surety and as its act and deed, any and all undertakings, bonds, recognizances and other surety obligations, in pursuance of these presents and shall be as binding upon the Companies as if they have been duly signed by the president and attested by the secretary of the Companies in their own proper persons.

IN WITNESS WHEREOF, this Power of Attorney has been subscribed by an authorized officer or official of the Companies and the corporate seals of the Companies have been affixed thereto this 19th day of March, 2026.

Liberty Mutual Insurance Company
The Ohio Casualty Insurance Company
West American Insurance Company

By: _____
Nathan J. Zangerle, Assistant Secretary

State of PENNSYLVANIA
County of MONTGOMERY ss

On this 19th day of March, 2026 before me personally appeared Nathan J. Zangerle, who acknowledged himself to be the Assistant Secretary of Liberty Mutual Insurance Company, The Ohio Casualty Company, and West American Insurance Company, and that he, as such, being authorized so to do, execute the foregoing instrument for the purposes therein contained by signing on behalf of the corporations by himself as a duly authorized officer.

IN WITNESS WHEREOF, I have hereunto subscribed my name and affixed my notarial seal at Plymouth Meeting, Pennsylvania, on the day and year first above written.

Commonwealth of Pennsylvania - Notary Seal
Teresa Pastella, Notary Public
Montgomery County
My commission expires March 28, 2029
Commission number 1126044
Member, Pennsylvania Association of Notaries

By: _____
Teresa Pastella, Notary Public

This Power of Attorney is made and executed pursuant to and by authority of the following By-laws and Authorizations of The Ohio Casualty Insurance Company, Liberty Mutual Insurance Company, and West American Insurance Company which resolutions are now in full force and effect reading as follows:

ARTICLE IV – OFFICERS: Section 12. Power of Attorney.
Any officer or other official of the Corporation authorized for that purpose in writing by the Chairman or the President, and subject to such limitation as the Chairman or the President may prescribe, shall appoint such attorneys-in-fact, as may be necessary to act in behalf of the Corporation to make, execute, seal, acknowledge and deliver as surety any and all undertakings, bonds, recognizances and other surety obligations. Such attorneys-in-fact, subject to the limitations set forth in their respective powers of attorney, shall have full power to bind the Corporation by their signature and execution of any such instruments and to attach thereto the seal of the Corporation. When so executed, such instruments shall be as binding as if signed by the President and attested to by the Secretary. Any power or authority granted to any representative or attorney-in-fact under the provisions of this article may be revoked at any time by the Board, the Chairman, the President or by the officer or officers granting such power or authority.

ARTICLE XIII – Execution of Contracts: Section 5. Surety Bonds and Undertakings.
Any officer of the Company authorized for that purpose in writing by the chairman or the president, and subject to such limitations as the chairman or the president may prescribe, shall appoint such attorneys-in-fact, as may be necessary to act in behalf of the Company to make, execute, seal, acknowledge and deliver as surety any and all undertakings, bonds, recognizances and other surety obligations. Such attorneys-in-fact subject to the limitations set forth in their respective powers of attorney, shall have full power to bind the Company by their signature and execution of any such instruments and to attach thereto the seal of the Company. When so executed such instruments shall be as binding as if signed by the president and attested by the secretary.

Certificate of Designation – The President of the Company, acting pursuant to the Bylaws of the Company, authorizes Nathan J. Zangerle, Assistant Secretary to appoint such attorneys-in-fact as may be necessary to act on behalf of the Company to make, execute, seal, acknowledge and deliver as surety any and all undertakings, bonds, recognizances and other surety obligations.

Authorization – By unanimous consent of the Company's Board of Directors, the Company consents that facsimile or mechanically reproduced signature of any assistant secretary of the Company, wherever appearing upon a certified copy of any power of attorney issued by the Company in connection with surety bonds, shall be valid and binding upon the Company with the same force and effect as though manually affixed.

I, Renee C. Llewellyn, the undersigned, Assistant Secretary, The Ohio Casualty Insurance Company, Liberty Mutual Insurance Company, and West American Insurance Company do hereby certify that the original power of attorney of which the foregoing is a full, true and correct copy of the Power of Attorney executed by said Companies, is in full force and effect and has not been revoked.

IN TESTIMONY WHEREOF, I have hereunto set my hand and affixed the seals of said Companies this 30th day of June, 2026.

By: _____
Renee C. Llewellyn, Assistant Secretary

LMS-12873 LMIC OCIC WAIC Multi Co 02/24

Not valid for mortgage, note, loan, letter of credit, currency rate, interest rate or residual value guarantees.

For bond and/or Power of Attorney (POA) verification inquiries, please call 610-832-8240 or email HOSUR@libertymutual.com

Office of Risk Assessment
50 West Town Street
Third Floor - Suite 300
Columbus,Ohio 43215
(614)644-2658
Fax(614)644-3256
www.insurance.ohio.gov

Ohio Department of Insurance

Mike DeWine - Governor

Judith French - Director

Certificate of Compliance

Issued 03/09/2026

Effective 04/02/2026

Expires 04/01/2027

I, Judith French, hereby certify that I am the Director of Insurance in the State of Ohio and have supervision of insurance business in said State and as such I hereby certify that

LIBERTY MUTUAL INSURANCE COMPANY

of Massachusetts is duly organized under the laws of this State and is authorized to transact the business of insurance under the following section(s) of the Ohio Revised Code:

Section 3929.01 (A)

Accident & Health
Aircraft
Allied Lines
Boiler & Machinery
Burglary & Theft
Collectively Renewable A & H
Commercial Auto - Liability
Commercial Auto - No Fault
Commercial Auto - Physical Damage
Credit
Credit Accident & Health
Earthquake
Fidelity
Financial Guaranty
Fire
Glass
Group Accident & Health
Guaranteed Renewable A & H
Inland Marine
Medical Malpractice
Multiple Peril - Commercial
Multiple Peril - Farmowners
Multiple Peril - Homeowners
Noncancellable A & H
Nonrenew-Stated Reasons (A&H)
Ocean Marine
Other Accident only
Other Liability
Private Passenger Auto - Liability
Private Passenger Auto - No Fault
Private Passenger Auto - Physical Damage
Surety
Workers Compensation

LIBERTY MUTUAL INSURANCE COMPANY certified in its annual statement to this Department as of December 31, 2025 that it has admitted assets in the amount of $79,161,066,336, liabilities in the amount of $46,097,112,301, and surplus of at least $33,063,954,035.

IN WITNESS WHEREOF, I have hereunto subscribed my name and caused my seal to be affixed at Columbus, Ohio, this day and date.

Judith L. French

Judith French, Director

FINAL CIP PROJECT CHECKLIST

Date: 6/11/26

Name of Project: CIP\T13 - Innovation @ Limmer Loop - Traffic Signal

Conditional / Final Acceptance Date: _____

Inspector's Name: Todd Meaker Job Number(s): _____

Note: All spaces need to be initialed by Inspector including N/A.

TM 1. Project Construction Summary Date Received: 6/26/26

TM 2. Engineer's Concurrence Letter Date Received: 6/26/26

TM 3. Maintenance Bond(s) Date Received: 7/01/26

TM 4. Final Cost & Quantities signed & sealed by engineer Date Received: 7/21/26

TM 5. As-built Reproducible Plans Date Received: 6/26/26
(1-24"X36", pdf scan, ACAD Base Map files< Shape File .SHP)

N/A 6. TDLR report if applicable Date Received: _____

N/A 7. Test Reports
_____ Manhole Test
_____ TV Test
_____ Bacteriological Test
_____ WW Low Air Pressure Test / Mandrel Test
_____ Valve & Hydrant Test
_____ Water Pressure Test

TM 8. Final Inspection Punch List Date Completed: _____

_____ 9. Liquidated Damages (Yes or No) If yes, how much $ _____ for _____ days.

N/A 10. No. of Lots for Subdivisions _____ Total Acres in Subdivision. _____

TM 11. Affidavit of all Bills Paid Date Received: 6/26/26

_____ 12. Final Change Order Date Received: _____

N/A 13. Extended Warranty (Yes or No) If yes, how long _____

TM 14. Map showing Area being accepted.

Comments: _____

_____

_____

Please initial: TM Inspector, TM Supervisor, _____

INDEX OF SHEETS

GENERAL

1	TITLE SHEET
2-4	GENERAL NOTES
5	SUMMARY OF QUANTITIES
6	SUMMARY OF SMALL SIGNS
7	HALN DATA

TRAFFIC CONTROL STANDARDS

8	SEQUENCE OF CONSTRUCTION
9-20	BC(1)-21 THRU BC(12)-21
21	TCP(2-1)-18
22-23	WZ(BTS-1)-13 THRU WZ(BTS-2)-13

SURVEY & UTILITIES

24	SURVEY CONTROL SHEET
25	SURVEY HORIZONTAL AND VERTICAL CONTROL SHEET
26	SUE QL-B LAYOUT

TRAFFIC SIGNAL

27-28	TRAFFIC SIGNAL INSTALLATION PLAN
29	CFA-12
30	ED(1)-14
31	ED(3)-14
32	ED(4)-14
33	ED(5)-14
34	ED(6)-14
35	ED(7)-14
36	ED(8)-14
37	ED(10)-14
38	ED(11)-14
39	LUM-A-12
40	MA-C-12
41-42	SMA-80(1-2)-12
43-44	SMA-100(1-2)-12
45	MAC-C(ISLN)-12
46	MA-D-12
47	SNS-95
48	TS-FD-12
49	TS-BP-20
50	TS-CF-21

PAVEMENT MARKINGS AND SIGNS

51	PAVEMENT MARKING DESIGN
52	PM(1)-22
53	PM(2)-22
54	PM(3)-22
55	SMD(GEN)-08
56	SMD(SLIP-1)-08
57	SMD(SLIP-2)-08
58	SMD(SLIP-3)-08
59	TSR(3)-13
60	TSR(4)-13
61	TSR(5)-13

ENVIRONMENTAL

62	STORMWATER POLLUTION PREVENTION PLAN
63-65	EROSION CONTROL NOTES AND STANDARDS
66	EPIC

CITY OF HUTTO

CAPITAL IMPROVEMENT PROJECT T13-2024

TRAFFIC SIGNAL PROJECT
LIMMER LOOP (CR 164) AND
INNOVATION BOULEVARD (CR 108)

PROPOSED TRAFFIC SIGNAL

PROJECT LIMITS:
302 FT WEST OF INNOVATION BLVD (CR 108) TO
317 FT EAST OF INNOVATION BLVD (CR 108)

314 FT SOUTH OF LIMMER LOOP (CR 164) TO
317 FT NORTH OF LIMMER LOOP (CR 164)

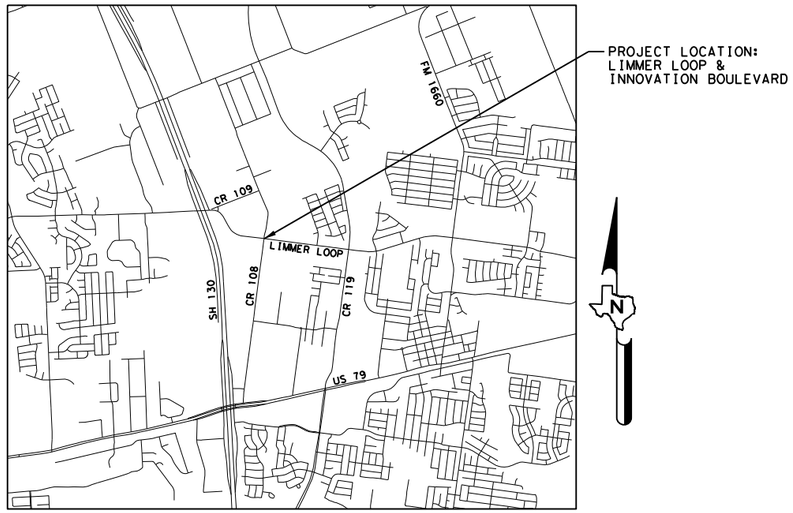

LOCATION MAP
NOT TO SCALE

EQUATIONS: NONE
EXCEPTIONS: NONE
RAILROAD CROSSINGS: NONE

100% SUBMITTAL
01/09/2025

PROJECT INFORMATION

CLASSIFICATION: MAJOR COLLECTOR
EXIST SPEED LIMIT: 50 MPH
DESIGN SPEED LIMIT: 50 MPH
AREA OF SOIL DISTURBANCE: <1 ACRE

MAYOR

MIKE SNYDER

CITY COUNCIL

BRIAN THOMPSON	-	COUNCIL PLACE 1
DAN THORNTON	-	COUNCIL PLACE 2
RANDAL CLARK	-	COUNCIL PLACE 3
PETER GORDON	-	MAYOR PRO TEM, COUNCIL PLACE 4
EVAN PORTERFIELD	-	COUNCIL PLACE 5
AMBERLEY KOLAR	-	COUNCIL PLACE 6

ACCEPTED FOR CONSTRUCTION:

CITY ENGINEER; CITY OF HUTTO, TEXAS
PUBLIC WORKS DEPARTMENT

TBPE FIRM REG. NO. F-16341

NOTE:

ALL RESPONSIBILITY FOR THE ADEQUACY OF THESE PLANS REMAINS WITH THE ENGINEER WHO PREPARED THEM. IN ACCEPTING THESE PLANS, THE CITY OF HUTTO MUST RELY UPON THE ADEQUACY OF THE WORK HERE IN SEALED BY THE DESIGN ENGINEER.

I, (LICENSED PROFESSIONAL ENGINEER), DO HEREBY CERTIFY THAT THE PUBLIC WORKS AND DRAINAGE IMPROVEMENTS DESCRIBED HERIN HAVE BEEN DESIGNED IN COMPLIANCE WITH THE SUBDIVISION AND BUILDING REGULATION ORDINANCES AND STORM WATER DRAINAGE POLICY ADOPTED BY THE CITY OF HUTTO, TEXAS.

SUBMITTED FOR APPROVAL BY:

STATE OF TEXAS
TARA TAYLOR ALEXANDER
109548
LICENSED PROFESSIONAL ENGINEER

Tara Alexander

(SEAL AND SIGNATURE OF PROFESSIONAL ENGINEER)
PROJECT MANAGER

1/15/2025
DATE

DRAWING DATE: 1/15/2025 FILENAME: pw:\\jmt-pw.bentley.com:jmt-pw-01\Documents\Projects\2022\22-01219-001\Design\4 - Design\Plan Set\1. General\HUTTO*TITLE01.DGN

FILENAME: pw:\\jmt-pw.bentley.com:jmt-pw-01\Documents\Projects\2022\22-01219-001\Design\4 - DesignPlan Set\1. General\HUTTO*GEN01.DGN.dgn
DRAWING DATE: 1/9/2025

City Of Hutto - General Construction Notes

Updated March 2019

1. The contractor is to contact one of the following:

Texas811	811
Lone star	1-800-669-8344

   For location of existing facilities at least 48 hours prior to commencement of any construction activities.
2. Prior to any construction, the design engineer shall convene a preconstruction conference between the City of Hutto, himself, the contractor, other utility companies, any affected parties and any other entity the City or engineer may require. If construction is not started on the site within 30 calendar days after the pre-construction conference, the engineer shall convene a new preconstruction conference between the City of Hutto, himself, and all the above mentioned entities.
3. Prior to any changes to the construction site, video of the site must be taken and provided to the City before construction commences.
4. All construction operations shall be performed in accordance with City of Hutto Engineering Manual and standard construction specifications and details. If City of Hutto Engineering Manual unavailable, or not applicable, refer to TxDOT and/or City of Georgetown Manual, standards and/or specifications.
5. All storm sewer bends and wyes shall be prefabricated.
6. All storm sewer mains to be field-tested for water tightness no sooner than 30 days after total completion of the storm sewer lines.
7. All storm sewer mains to be video taped by camera no sooner than 30 days after total completion of the storm sewer lines. Two digital copies shall be supplied to the City before closeout. All storm sewer conduits will be inspected by the city before city acceptance, video must show details of all irregularities or offsets (minimum 10 seconds of video time).
8. All construction operations shall be accomplished in accordance with applicable regulations of the U.S. Occupational Safety and Health Administration. OSHA standards may be purchased from the government printing office; information and related reference materials may be purchased from OSHA, 611 e. 6th Street, Austin, Texas.
9. Contractor shall take all due precautions to protect existing facilities from damage. Any damage incurred to existing facilities as a result of construction operations to be repaired immediately by the contractor, at no additional cost to owner.
10. Contractor to give notice to all authorized inspectors, superintendents or persons in charge of public and private utilities affected by his operations at least 48 hours prior to commencement of work.

11. Contractor to comply with all applicable local, state, and federal requirements regarding excess and waste material, including methods of handling and disposal.
12. Contractor to coordinate interruptions of all utilities and services. All work to be in accordance with the requirements of the applicable utility company or agency involved.
13. When un-located or incorrectly located, a break in utility lines, or other utilities and services are encountered during site work operations, contractor shall notify the applicable utility company immediately to obtain procedure directions. Contractor shall cooperate with the applicable utility company in maintaining active services in operation.
14. Contractor to locate, protect, and maintain benchmarks, monuments, control points and project engineering reference points. Re-establish disturbed or destroyed items by registered professional land surveyor in the State of Texas, at no additional cost to owner.
15. When construction is being carried out within easements, the contractor shall confine his work to within the permanent and temporary easements. Prior to final acceptance, the contractor shall be responsible for removing all trash and debris within the permanent and temporary easements. Clean-up shall be to the satisfaction of the engineer.
16. The contractor and the engineer shall keep accurate records of all construction that deviates from the plans. Accurate “record” drawings will be provided to the City of Hutto, along with a letter certification from a registered professional engineer licensed in the State of Texas, stating that said project has been constructed in accordance with these plans, prior to the owner being issued a certification of completion and final acceptance. These “record” drawings shall meet with the satisfaction of the Engineering and Development Services Departments prior to final acceptance.
17. Contractor shall strip six (6) inches of topsoil from all areas subject to grade modification. Remove all areas of weak soil.
18. The contractor shall protect all existing fences. In the event that a fence must be removed, the contractor shall replace said fence or portion thereof with the same type of fencing to a quality of equal or better than the original fence.
19. Upon completion of the project, the site(s) as defined herein shall be cleaned of all debris and left in a neat and presentable condition.
20. All adjoining pavement sections shall be protected during all phases of construction and any damages incurred due to contractor’s operation shall be repaired and/or replaced at the contractor’s expense.
21. Contractor to control dust caused by the work and comply with pollution control regulations of governing authorities (no separate pay).
22. Traffic controls to be installed in accordance with the current TxDOT manual on uniform traffic control devices and TxDOT barricade and construction standards.
23. Revegetate all disturbed areas upon completion of the work per City of Georgetown construction standards.

STATE OF TEXAS
ELLIOT R. CUDE
131513
LICENSED PROFESSIONAL ENGINEER

1/9/2025

CITY OF HUTTO

JMT
TBPE FIRM REG. NO. F-16341

CITY OF HUTTO
TRAFFIC SIGNAL PROJECT
LIMMER LOOP AND INNOVATION BLVD

GENERAL NOTES

SHEET 1 OF 3

(C) 2024	STATE	CITY	COUNTY	SHEET NO.
	TEXAS	HUTTO	WILLIAMSON	2

24. Contractor to exercise caution during construction near and around gas lines and power lines.
25. No work is to be performed between the hours of 6:00 p.m. and 7:00 a.m. all work requiring City inspection shall be performed Monday thru Friday. The City reserves the right to require the contractor to uncover all work performed without inspection.
26. The Contractor shall determine the exact location vertically and horizontally of all existing utilities prior to commencing work, and shall notify the engineer and the City if the existing utility location and depths are different from what is shown on the plans. The contractor agrees to be fully responsible for any and all damages which might be associated by the contractor's failure to exactly locate and preserve any and all underground utilities.
27. All Fire Lines shall be ductile iron.
28. Detectable tape shall be used for all underground utilities. Tape must be 12" wide 5 mil with applicable color and label.
29. Contractor will be responsible for keeping roads and drives adjacent to and near the site free from soil, sediment and debris. Contractor will not remove soil, sediment or debris from any area or vehicle by means of water, only shoveling and sweeping will be allowed. Contractor will be responsible for dust control from the site.
30. The Contractor shall be responsible for all damage to private property which occurs as a result of any portion of this project. Any damage to private property shall be repaired to equal or better condition. The Contractor shall pay and/or settle with private property owner(s) for all cost related to damage. The City will not provide separate pay for repair of damages, reimbursements or settlements.

PROJECT SPECIFIC GENERAL NOTES:

TO OBTAIN A PERMIT TO PERFORM CONSTRUCTION WITHIN THE PUBLIC RIGHT-OF-WAY, CONTRACTORS AND SUBCONTRACTORS MUST REGISTER WITH THE CITY OF HUTTO BEFORE THE PRECONSTRUCTION MEETING. ADDITIONAL INFORMATION REGARDING REGISTRATION FOR CONSTRUCTION WITHIN THE PUBLIC RIGHT-OF-WAY MAY BE OBTAINED BY GOING TO THE CITY OF HUTTO DEVELOPMENT SERVICES WEBSITE AT WWW.HUTTOTX.GOV.

REFERENCES TO MANUFACTURER'S TRADE NAME OR CATALOG NUMBERS ARE FOR THE PURPOSE OF IDENTIFICATION ONLY. SIMILAR MATERIALS FROM OTHER MANUFACTURERS ARE PERMITTED IF THEY ARE OF EQUAL QUALITY, COMPLY WITH THE SPECIFICATIONS FOR THIS PROJECT, AND ARE APPROVED.

ITEM 506 - TEMPORARY EROSION, SEDIMENTATION, AND ENVIRONMENTAL CONTROLS

CONTRACTOR SHALL INSTALL SW3P MEASURES IN ACCORDANCE WITH THE CITY OF HUTTO, AND TXDOT STANDARDS AND SPECIFICATIONS, OR AS DIRECTED BY THE CITY OF HUTTO.

CONTRACTOR SHALL CONDUCT AND DOCUMENT REQUIRED INSPECTION OF SW3P DEVICES IN ACCORDANCE WITH CURRENT ISSUE OF TCEQ GENERAL PERMIT TO DISCHARGE UNDER THE TEXAS POLLUTANT DISCHARGE ELIMINATION SYSTEM, TPDES GENERAL PERMIT NO. TXR150000 STORMWATER DISCHARGES ASSOCIATED WITH CONSTRUCTION ACTIVITIES.

ITEMS 600'S - LIGHTING, SIGNING, MARKINGS, AND SIGNALS

MEET THE REQUIREMENTS OF THE NEC, TEXAS MUTCD, TXDOT STANDARDS, AND TXDOT STANDARD SPECIFICATIONS. NOTIFY THE CITY IF EXISTING ELEMENTS TO REMAIN DO NOT MEET CODE OR SPECIFICATION.

PROVIDE A 14-DAY ADVANCE EMAIL NOTICE TO THE CITY ENGINEER TO REQUEST ILLUMINATION OR TRAFFIC SIGNAL PUNCH LIST INSPECTION.

ALL ITEMS MUST BE COMPLETED PER THE PLANS PRIOR TO TRAFFIC SIGNAL ACTIVATION INCLUDING DEFICIENCIES FOUND IN THE PUNCH LIST.
PROVIDE A 21-DAY ADVANCE NOTICE PRIOR TO PLANNED TRAFFIC SIGNAL ACTIVATION. SEND NOTICE BY EMAIL TO CITY ENGINEER MATT.RECTOR@HUTTOTX.GOV, CIP ENGINEER PATRICIA.DAVIS@HUTTOTX.GOV, PUBLIC WORKS DIRECTOR RICK.CORONADO@HUTTOTX.GOV, AND HUTTO COMMUNICATIONS DEPARTMENT HUTTOCOMM@HUTTOTX.GOV.
THE CONTRACTOR MUST HAVE A QUALIFIED TECHNICIAN AND A REPRESENTATIVE FROM THE CONTROLLER AND DETECTION SUPPLIER ON THE PROJECT SITE TO PLACE THE TRAFFIC SIGNALS IN OPERATIONS.

PRIOR TO RELIEF OF MAINTENANCE, A 30-DAY TEST PERIOD IS REQUIRED FOR SIGNALS AND ITS EQUIPMENT IN ACCODANCE WITH TXDOT ITEM 680.3.1.8. RESPONSE TIME TO REPORTED TROUBLE CALLS SHALL BE LESS THAN 2 HOURS.

COMPLETE REPAIRS WITHIN 24 HOURS. NOTIFY THE CITY ENGINEER AND MAINTAIN A LOGBOOK IN THE CONTROLLER CABINET OF EACH TROUBLE CALL. DO NOT CLEAR THE ERROR LOG IN THE CONFLICT MONITOR WITHOUT APPROVAL.

NEW SIGNS AND RELOCATED SIGNS SHALL MEET MINIMUM HEIGHT CLEARANCES FOR PEDESTRIAN FACILITIES.

ITEM 618 - CONDUIT

SHIFT THE LOCATIONS OF CONDUIT AND GROUND BOXES TO ACCOMMODATE FIELD CONDITIONS. INSTALL CONDUIT NOT EXCEEDING 2 FEET IN ANY DIRECTION FROM A STRAIGHT LINE. INSTALL CONDUIT AT A MINIMUM DEPTH OF 2 FT. BELOW FINISHED GRADE. INSTALLATION OF THE CONDUIT BY JACKING OR BORING METHOD WILL BE AT A DEPTH OF AT LEAST 1 FT. BELOW SUBGRADE.

FOR UNDERGROUND CONDUIT, SMOOTH WALL SCHEDULE 40 EQUIVALENT HDPE CAN BE SUBSTITUTED FOR SCHEDULE 40 PVC. SCHEDULE 80 BORE CAN BE REPLACED WITH A SCHEDULE 40 EQUIVALENT HDPE CARRIER PIPE OF ADEQUATE SIZE TO CARRY THE PROPOSED CONDUITS. HDPE MUST TRANSITION TO RMC/PVC PER ED (11)-14.

ITEM 620 - ELECTRICAL CONDUCTORS

PROVIDE 10-AMP TIME DELAY FUSES.

INSTALL A MINIMUM SIZE 8 AWG EQUIPMENT GROUNDING CONDUCTOR (EGC) IN ALL CONDUITS INCLUDING LOOP DETECTORS AND TRAFFIC SIGNAL CABLES. PAYMENT AND THE SIZE OF THE EGC WILL BE IN ACCORDANCE WITH STANDARD ED (3)-14 NOTE 12.

PERMANENTLY MARK ILLUMINATION ON THE LUMINAIRE CONDUCTORS INSTALLED INSIDE OF A TRAFFIC SIGNAL POLE. MAKE THE MARKS EASILY VISIBLE FROM THE HAND HOLE.

ITEM 624 - GROUND BOXES

AGGREGATE FOR FILL UNDER THE BOX WILL BE CRUSHED, HAVE A MAXIMUM SIZE OF 2 IN., MINIMUM SIZE OF 59/64 IN., AND REQUIREMENTS PER TXDOT ITEM 302 ARE WAIVED.

ITEM 6001 - PORTABLE CHANGEABLE MESSAGE SIGNS

PORTABLE DMS ARE TO BE PLACED IN THE VICINITY OF THE LIMMER LOOP PROJECT LIMITS, IN ADVANCE OF THE INNOVATION BLVD INTERSECTION, ADVISING THE PUBLIC OF A FUTURE CHANGE OF TRAFFIC OPERATIONS A MINIMUM OF 14-DAYS BEFORE ACTIVATION OF TRAFFIC SIGNALS.

TRAFFIC SIGNAL GENERAL NOTES

1. TXDOT STANDARD SHEETS SMA-80-12 AND TS-FD-12 HAVE BEEN MODIFIED.
2. THE CONTRACTOR SHALL CLEAN UP AND REMOVE FROM WORK AREA ALL LOOSE MATERIAL RESULTING FROM THE CONTRACT OPERATIONS EACH DAY BEFORE WORK IS SUSPENDED.
3. ANY OBSTRUCTIONS TO EXISTING DRAINAGE DUE TO THE CONTRACTOR'S OPERATIONS WILL BE REMOVED BY THE CONTRACTOR AS REQUIRED BY THE CITY AT THE CONTRACTOR'S ENTIRE EXPENSE.
4. UNLESS DIRECTED BY THE CITY, THE SIGNAL SHALL BE PLACED IN FULL OPERATION BETWEEN 9:00A.M. - 12:00 P.M. (NOON) ON MONDAY, TUESDAY, OR WEDNESDAY ONLY.

THE TRAFFIC SIGNAL INSTALLATION CONSISTS OF THE FOLLOWING PRINCIPAL ITEMS:

1. FURNISHING AND INSTALLING CABINET, CONTROLLER, DIGITAL DETECTORS, AND CARD RACK ASSEMBLIES, AS REQUIRED. CARD RACK ASSEMBLIES SHALL BE FAIL-SAFE. ALL EQUIPMENT SHALL BE COMPATIBLE WITH EXISTING CITY SYSTEMS.
2. FURNISHING AND INSTALLING MAST ARMS, SIGNAL POLES, LUMINAIRES, SIGNAL HEADS, LED STREET NAME SIGNS, AND SIGNAL CABLE.
3. FURNISHING AND INSTALLING A BATTERY BACK-UP SYSTEM THAT IS COMPATIBLE WITH EXISTING CITY SYSTEMS.
4. FURNISHING AND INSTALLING CONDUIT AND GROUND BOXES.
5. FURNISHING AND PLACING ALL CONCRETE AND REINFORCING STEEL FOR THE SIGNAL POLE FOUNDATIONS AND CONTROLLER FOUNDATIONS.
6. FURNISHING AND INSTALLING ANTI-GLARE VIDEO DETECTION VIVDS EQUIPMENT THAT IS COMPATIBLE WITH EXISTING CITY SYSTEMS.
7. THE CONTRACTOR SHALL ALSO FURNISH AND INSTALL ALL OTHER ITEMS NOT LISTED ABOVE WHICH ARE NEEDED TO PROVIDE THE COMPLETE TRAFFIC SIGNAL INSTALLATION AS CALLED FOR IN THE PLANS AND SPECIFICATIONS.

STATE OF TEXAS
ELLIOT R. CUDE
131513
LICENSED
PROFESSIONAL ENGINEER
2/12/2025

CITY OF HUTTO
JMT
TBPE FIRM REG. NO. F-16341

CITY OF HUTTO
TRAFFIC SIGNAL PROJECT
LIMMER LOOP AND INNOVATION BLVD

GENERAL NOTES

SHEET 2 OF 3

(C) 2024	STATE	CITY	COUNTY	SHEET NO.
	TEXAS	HUTTO	WILLIAMSON	3

1 2/12/2025 - REMOVED OPTICOM NOTES; CLARIFIED PAINT COLORS; REVISED CONTROLLER AND ILSN NOTES; REVISIONS TO SIGNAL DETAIL SHEET.

DRAWING DATE: 2/12/2025 FILENAME: pw:\\jmt-pw.bentley.com:jmt-pw-01\Documents\Projects\2022\22-01219-001\Design\4 - Design\Plan Set\1. General\HUTTO*GEN02.DGN.dgn

DRAWING DATE: 2/12/2025 FILENAME: pw:\\jmt-pw.bentley.com:jmt-pw-01\Documents\Projects\2022\22-01219-001\Design\4 - Design\Plan Set\1. General\HUTTO*GEN03.DGN

SIGNAL TECHNICIAN

1. A SIGNAL TECHNICIAN FROM THE CITY OF HUTTO SHALL BE PRESENT WHEN THE SIGNALS ARE PLACED IN OPERATION. THE CONTRACTOR SHALL NOTIFY THE CITY IN ADVANCE OF THE TURN ON.

TEST PERIOD FOR SIGNALS

1. ONCE THE PERMANENT SIGNALS HAVE BEEN INSTALLED AND PLACED IN OPERATION, THEY SHALL OPERATE CONTINUOUSLY FOR A MINIMUM OF 30 CALENDAR DAYS IN A SATISFACTORY MANNER. EQUIPMENT FAILURE DURING THIS 30 DAYS WILL CAUSE THE TEST PERIOD TO START OVER.

EXISTING UTILITIES

1. THE EXACT LOCATION OF THE UNDERGROUND UTILITIES IS NOT CERTAIN. THE CONTRACTOR SHALL CONTACT THE CITY OF HUTTO AND UTILITY COMPANIES IN THE AREA FOR EXACT LOCATION PRIOR TO DRILLING FOR FOUNDATIONS AND ANY OTHER WORK THAT MIGHT INTERFERE WITH OR DAMAGE PRESENT UTILITIES. NO ADDITIONAL PAYMENT WILL BE MADE FOR THE RELOCATION OF ANY FOUNDATIONS DUE TO UTILITIES.

2. TEXAS STATE LAW, ARTICLE 1436C, MAKES UNLAWFUL THE OPERATION OF EQUIPMENT OR MACHINES WITHIN 10 FEET OF ANY OVERHEAD ELECTRICAL LINE UNLESS DANGER AGAINST CONTACT WITH HIGH VOLTAGE LINES HAS BEEN EFFECTIVELY GUARDED AGAINST PURSUANT TO THE PROVISIONS OF THE ARTICLE. WHEN CONSTRUCTION OPERATIONS REQUIRES WORKING NEAR AN OVERHEAD ELECTRICAL LINE, THE CONTRACTOR SHALL CONTACT THE OWNER/OPERATOR OF THE OVERHEAD ELECTRICAL LINE TO MAKE ADEQUATE ARRANGEMENTS AND TO TAKE NECESSARY SAFETY PRECAUTIONS TO ENSURE THAT ALL LAWS ELECTRICAL LINE OWNER/OPERATOR REQUIREMENTS AND STANDARD INDUSTRY SAFETY PRACTICES ARE MET.

POLE FOUNDATIONS

1. NO MAST ARM POLE SHALL BE PLACED ON THE FOUNDATIONS PRIOR TO SEVEN (7) DAYS FOLLOWING PLACEMENT OF CONCRETE.

2. STAKE FOUNDATION LOCATIONS AND HAVE THEM APPROVED BY THE INSPECTOR BEFORE INSTALLATION. THIS WILL ENSURE THAT ALL LUMINAIRES AND MAST ARMS ARE CLEAR OF ALL OVERHEAD LINES AND UNDERGROUND UTILITIES BEFORE DRILLING BEGINS. THE SIGNAL INSPECTOR TOGETHER WITH THE CONTRACTOR WILL CALCULATE THE VERTICAL SIGNAL HEAD CLEARANCE BEFORE PLACING ANY TRAFFIC SIGNAL POLE FOUNDATION.

3. THE DIMENSIONS SHOWN ON THE PLANS FOR LOCATION OF SIGNAL FOUNDATIONS, CONDUIT, AND OTHER ITEMS MAY BE VARIED TO MEET LOCAL CONDITIONS, SUBJECT TO APPROVAL BY THE CITY.

4. THE CONTRACTOR SHALL NOTIFY THE CITY OF HUTTO DEPARTMENT OF PUBLIC WORKS AT (512) 759-4023 AT LEAST 48 HOURS BEFORE PLACING CONCRETE.

5. ALL EXPOSED SIGNAL POLE AND CONTROLLER FOUNDATIONS SHALL RECEIVE A CLASS C FINISH AS PER TXDOT ITEM 427.

ELECTRICAL CONDUCTORS

1. ALL ELECTRICAL CONNECTORS FOR BREAKAWAY POLES SHALL BE BREAKAWAY (BUCHANAN 65U, BUSSMAN HEBW, LITTLEFUSE LEB, OR EQUAL), IN ACCORDANCE WITH RID(2). ALL ELECTRICAL CONNECTIONS FOR NEUTRALS SHALL BE BREAKAWAY, SHALL HAVE A WHITE COLOR IN MARKING AND SHALL HAVE PERMANENTLY INSTALLED SOLED NEUTRAL (BUCHANAN 20U, BUSSMAN HET, LITTLEFUSE LET, OR EQUAL).

CONDUIT

1. UNDERGROUND CONDUIT FOR CABLE SHALL BE SCHEDULE 40 PVC. ALL COUPLINGS AND CONNECTIONS SHALL BE TIGHT AND WATER PROOF. △1 △1

2. A CONTINUOUS BARE OR GREEN INSULATED COPPER WIRE NO. 8 OR LARGER SHALL BE INSTALLED IN EVERY PVC CONDUIT THROUGHOUT THE ELECTRICAL SYSTEM IN ACCORDANCE WITH THE ELECTRICAL DETAIL SHEETS, AND THE LATEST EDITION OF THE ELECTRICAL CODE.

3. ALL PVC CONDUIT ELBOWS AND RIGID METAL EXTENSIONS REQUIRED TO BE INSTALLED ON PVC CONDUIT SYSTEMS WILL NOT BE PAID FOR SEPARATELY, BUT WILL BE CONSIDERED SUBSIDIARY TO VARIOUS BID ITEMS. △1 PVC CONDUIT SHALL BE SCHEDULE 40, UNLESS OTHERWISE APPROVED BY THE ENGINEER.

4. CONDUIT TO BE PLACED UNDER EXISTING PAVEMENT SHALL BE PLACED AT A MINIMUM DEPTH OF 2 FEET BELOW THE PAVEMENT SURFACE. IF IT IS DETERMINED BY THE ENGINEER THAT IT IS IMPRACTICAL TO PLACE CONDUIT BY JACKING OR BORING, THE OPEN TRENCH METHOD MAY BE USED, WHEN APPROVED, AT NO ADDITIONAL EXPENSE TO THE OWNER. IN THE EVENT THAT THE OPEN TRENCH METHOD IS USED, THE TRENCH SHALL BE BACKFILLED TO A CONDITION ACCEPTABLE TO THE ENGINEER.

5. DO NOT USE EXPANDABLE FOAM TO SEAL ENDS OF CONDUIT, WHETHER USED OR UNUSED. CAP AND PLUG METHOD SHALL BE USED.

ELECTRICAL SERVICE

1. CONTRACTOR SHALL COORDINATE WITH THE CITY OF HUTTO AND THE ELECTRICAL SERVICE PROVIDER AT LEAST 30 DAYS IN ADVANCE OF THE NEED FOR A SERVICE CONNECTION.

POLE ASSEMBLIES

1. CRITICAL POLE ASSEMBLY FEATURES AND DIMENSIONS REQUIRED FOR THIS PROJECT ARE SHOWN ON THE PLAN DETAIL SHEETS.

2. POLE SHAFT/MAST ARM IDENTIFICATION NUMBERS SHALL BE STENCILED ON POLE SHAFTS AND MAST ARM BEFORE SHIPMENT TO ENSURE MATCHING OF POLES AND MAST ARMS DURING FIELD ASSEMBLY.

3. ALL SIGNAL POLES AND MAST ARMS SHALL BE GALVANIZED STEEL AND HAVE A POWDER COAT OF MAHOGONY BROWN (COLOR: RAL 8016)

4. ALL SIGNAL POLES SHALL BE ROUND TYPE.

5. PROVIDE ALL SIGNAL POLES FROM THE SAME MANUFACTURER.

LUMINAIRE MAST ARMS/FIXTURES/LAMPS

1. LUMINAIRE MAST ARMS SHALL BE POSITIONED DIRECTLY ABOVE AND IN LINE WITH THE ASSOCIATED MAST ARM.

2. THE LUMINAIRE ARM SHALL BE PART NUMBER KIM HA11L OR APPROVED EQUAL. LUMINAIRE ARMS/HEADS/CONNECTIONS SHALL BE POWDER COATED MAHOGONY BROWN (COLOR: RAL 8016). THE LUMINAIRE FIXTURE/LAMP SHALL BE PART NUMBER KIM 1A/RA252-400MH480/BL-P/SAL-TM1 OR APPROVED EQUAL. △1

3. LUMINAIRE MAST ARMS, FIXTURES, AND LAMPS ARE CONSIDERED SUBSIDIARY TO ITEM 680.

SIGNAL HEADS

1. UNLESS OTHERWISE SHOWN IN THE PLANS, ALL SIGNAL HEADS SHALL BE MOUNTED HORIZONTALLY.

2. ALL SIGNAL HEADS SHALL BE COVERED IN BURLAP OR OTHER APPROVED MATERIAL FROM THE TIME OF INSTALLATION UNTIL THE SIGNAL IS PLACED IN OPERATION.

3. LED SIGNAL LAMPS SHALL BE USED FOR ALL SIGNAL INDICATIONS AND FURNISHED BY THE CONTRACTOR.

4. PROVIDE ALL SIGNAL HEADS FROM THE SAME MANUFACTURER.

5. ALL NEW VEHICLE AND COUNTDOWN PEDESTRIAN SIGNAL HEADS FOR THE PERMANENT SIGNAL SHALL BE ALUMINUM WITH ALUMINUM VENTED BACK PLATES. THESE ITEMS SHALL BE PRIMED PRIOR TO AND PAINTED WITH PERMANENENT BLACK PAINT.

6. ALL BRACKETS USED FOR MOUNTING SIGNAL HEADS SHALL BE PRIMED AND PAINTED MAHOGANY BROWN (COLOR: RAL 8016). △1

TRAFFIC SIGNAL CABLES

1. IDENTIFY EACH CABLE AS SHOWN ON THE PLANS (CABLE 1, ETC.) WITH PRE-NUMBERED IDENTIFICATION TAGS OF PLASTIC TAPE OR MARKING LABELS AT EACH SIGNAL HEAD, GROUND BOX, TERMINAL BLOCK, POLE BASE AND CONTROLLER.

2. ALL CABLES SHALL BE CONTINUOUS WITHOUT SPLICES FROM TERMINAL POINT TO TERMINAL POINT OR AS DIRECTED OR APPROVED. ALL PROPOSED SIGNAL CABLE AND NUMBER OF CONDUCTORS REQUIRED SHALL BE AS SHOWN ON THE PLANS.

3. TERMINATE ALL ELECTRICAL CONDUCTORS FORM THE CONTROLLER AT THE TERMINATION BLOCK IN THE SIGNAL POLE HAND HOLE WHETHER IN USE OR NOT.

4. PROVIDE AN EXTRA 10' FOR EACH CABLE TERMINATING IN THE CONTROLLER CABINET. ALL CABLES SHALL BE CONTINUOUS WITHOUT SPLICES FROM TERMINAL POINT TO TERMINAL POINT. PROVIDE THE NUMBER OF CONDUCTORS AS SHOWN ON THE PLANS.

TRAFFIC SIGNAL CONTROLLER & CABINET

1. THE CONTRACTOR SHALL FURNISH AND INSTALL AN ECONOLITE COBALT SERIES TRAFFIC SIGNAL CONTROLLER WITH NEMA CONNECTIONS, OR APPROVED EQUIVALENT OTHER, AND TS2 TYPE CABINET AS SPECIFIED UNDER TXDOT DMS-11170. △1

WIRING

1. EXTRA CABLE LENGTH SHALL BE INCLUDED IN EACH RUN TO PROVIDE ADEQUATE SLACK, AS DETERMINED BY THE CITY, AT EACH GROUND BOX OR FOUNDATION.

2. NO SPLICES SHALL BE ALLOWED IN THE VEHICLE DETECTOR CABLE. △1

3. THE CONDUIT CHARTS ON THE INTERSECTION LAYOUT SHEETS DO NOT REFLECT THE SIGNAL CABLE THAT IS REQUIRED FROM THE SIGNAL HEAD TO THE TERMINAL BLOCK. THE REQUIRED CABLE NEEDED WILL BE PAID FOR SUBSIDIARY TO THE INSTALLATION OF THE TRAFFIC SIGNAL BID ITEM.

SIGNING

1. ALL NEW SIGNS SHALL BE FURNISHED AND INSTALLED BY THE CONTRACTOR.

ILLUMINATED STREET NAME SIGNS (ILSN)

1. CONTRACTOR SHALL FURNISH AND INSTALL ILSN (SOUTHERN MANUFACTORING, CLEAN PROFILE, SINGLE SIDED) ON ILSN SUPPORT ARMS PER TXDOT STANDARDS. THE ILSN SHALL BE LED SIGNS.

2. CONTRACTOR SHALL PROVIDE DETAILED SHOP DRAWINGS FOR ALL SIGNS AND RELEVANT MOUNTING ACCESSORIES FOR ENGINEER APPROVAL PRIOR TO PROCUREMENT AND INSTALLATION. △1

3. CONTRACTOR SHALL COORDINATE THE CITY LOGO WITH THE CITY OF HUTTO PRIOR TO PROVIDING SHOP DRAWINGS FOR STREET NAME SIGNS.

4. ALL STREET NAME SIGN PANELS SHALL HAVE WHITE LETTERING ON GREEN BACKGROUND. STREET NAMES SHALL BE 12" SERIES D.

5. POWER ACCESS TO THE ILSN SHALL BE FROM THE SIDE OF THE SIGN LOCATED NEAREST THE SIGNAL POLE.

SALVAGED EQUIPMENT

1. EQUIPMENT REMOVED SHALL BE RETURNED TO THE CITY OF HUTTO PUBLIC WORKS DEPARTMENT.

BATTERY BACK-UP-SYSTEM

1. THE CONTRACTOR SHALL FURNISH AND INSTALL AN ALPHA NOVUS FXM HP (2000 W/VA OUTPUT) SYSTEM. IT SHALL INCLUDE ALPHA CELL 220 GXL BATTERIES, ALPHA GUARD BATTERY CHARGE MANAGEMENT SYSTEM, ALPHA TRANSFER SWITCH, AND A S6 OUTDOOR ENCLOSURE.

△1 2/12/2025 - REMOVED OPTICOM NOTES; CLARIFIED PAINT COLORS; REVISED CONTROLLER AND ILSN NOTES; REVISIONS TO SIGNAL DETAIL SHEET.

STATE OF TEXAS
ELLIOT R. CUDE
131513
LICENSED PROFESSIONAL ENGINEER
2/12/2025

CITY OF HUTTO

JMT

TBPE FIRM REG. NO. F-16341

CITY OF HUTTO
TRAFFIC SIGNAL PROJECT
LIMMER LOOP AND INNOVATION BLVD

GENERAL NOTES

SHEET 3 OF 3

(C) 2024	STATE	CITY	COUNTY	SHEET NO.
	TEXAS	HUTTO	WILLIAMSON	4

SUMMARY OF QUANTITIES

SHEET	CoG G1 BARRICADES, SIGNS AND TRAFFIC HANDLING (MO)	TXDOT 636 6001 ALUMINUM SIGNS (TY A) (SF)	TXDOT 644 6061 IN SM RD SN SUP&AM TYTWT (1)WS (T) (EA)	TXDOT 644 6076 REMOVE SM RD SN SUP&AM (EA)	TXDOT 666 6036 REFL PAV MARK TY I (W) 8" (SLD) (100MIL) (LF)	TXDOT 666 6048 REFL PAV MARK TY I (W) 24" (SLD) (100MIL) (LF)	TXDOT 666 6054 REFL PAV MARK TY I (W) (ARROW) (100MIL) (EA)	TXDOT 666 6078 REFL PAV MARK TY I (W) (WORD) (100MIL) (EA)	TXDOT 666 6321 RE PM W/RET REQ TY I (Y) 6" (SLD) (100MIL) (LF)	TXDOT 672 6007 REFL PAV MRKR TY I-C (EA)	TXDOT 672 6009 REFL PAV MRKR TY II-A-A (EA)	TXDOT 677 6002 ELIM EXT PAV MRK & MRKS (6") (LF)	TXDOT 677 6003 ELIM EXT PAV MRK & MRKS (8") (LF)	TXDOT 677 6005 ELIM EXT PAV MRK & MRKS (12") (LF)	TXDOT 677 6007 ELIM EXT PAV MRK & MRKS (24") (LF)	
PAVEMENT MARKING LAYOUT SHEET	3	117	4	2	66	100	1	1	118	4	14	624	71	24	136	
PROJECT TOTALS	3	117	4	2	66	100	1	1	118	4	14	624	71	24	136	

SUMMARY OF QUANTITIES

SHEET	CoG* G3 SITE CLEARING (EA)	CoG* G6 SILT FENCE (LF)	CoG* G6 ROCK BERM (LF)	CoG* G6 CONCRETE WASHOUT (SF)	TXDOT** 162 6002 BLOCK SODDING (SY)							
SW3P LAYOUT SHEET	1	221	27	36	770							
PROJECT TOTALS	1	221	27	36	770							

* USE CITY OF HUTTO STANDARDS WITH THE REFERENCED CONSTRUCTION SPECIFICATION

** TOPSOIL SHALL BE CONSIDERED SUBSIDIARY TO THIS BID ITEM

SUMMARY OF QUANTITIES

SHEET	TXDOT 416 6032 DRILL SHAFT (TRF SIG POLE) (36IN) (LF)	TXDOT 500 6001 MOBILIZATION (LS)	TXDOT 618 6023 CONDT (PVC) (SCH 40) (2") (LF)	TXDOT 618 6024 CONDT (PVC) (SCH 40) (2") BORE (LF)	TXDOT 618 6029 CONDT (PVC) (SCH 40) (3") (LF)	TXDOT 618 6030 CONDT (PVC) (SCH 40) (3") BORE (LF)	TXDOT 620 6007 ELEC CONDR (NO.8) BARE (LF)	TXDOT 620 6008 ELEC CONDR (NO.8) INSULATED (LF)	TXDOT 620 6010 ELEC CONDR (NO.6) INSULATED (LF)	TXDOT 624 6002 GROUND BOX TY A (122311) W/APRON (EA)	TXDOT 624 6010 GROUND BOX TY D (162922) W/APRON (EA)	TXDOT 628 6161 ELC SRV TY D 120/240 070 (NS)AL (E)EX (O) (EA)	TXDOT*** 680 6002 INSTALL HWY TRF SIG (ISOLATED) (EA)	TXDOT 682 6001 VEH SIG SEC (12")LED (GRN) (EA)	TXDOT 682 6002 VEH SIG SEC (12")LED (GRN ARW) (EA)	TXDOT 682 6003 VEH SIG SEC (12")LED (YEL) (EA)	TXDOT 682 6004 VEH SIG SEC (12")LED (YEL ARW) (EA)
SIGNAL LAYOUT SHEET	56	1	123	13	768	555	744	864	22	3	2	1	1	8	1	8	8
PROJECT TOTALS	56	1	123	13	768	555	744	864	22	3	2	1	1	8	1	8	8

*** FURNISH AND INSTALL SIGNS FOR SIGNAL (SUBSIDIARY TO ITEM 680).

1

SUMMARY OF QUANTITIES

SHEET	TXDOT 682 6005 VEH SIG SEC (12")LED (RED) (EA)	TXDOT 682 6006 VEH SIG SEC (12")LED (RED ARW) (EA)	TXDOT 682 6049 BACKPLATE W/REFL BRDR (4 SEC) (EA)	TXDOT 682 6060 BACKPLATE W/REFL BRDR (3 SEC) (EA)	TXDOT 684 6033 TRF SIG CBL (TY A) (14 AWG) (7 CONDR) (LF)	TXDOT 686 6040 INS TRF SIG PL AM (S)1 ARM (36')LUM&ILSN (EA)	TXDOT 686 6048 INS TRF SIG PL AM (S)1 ARM (44')LUM&ILSN (EA)	TXDOT 686 6052 INS TRF SIG PL AM (S)1 ARM (48')LUM&ILSN (EA)	TXDOT 6001 6001 PORTABLE CHANGEABLE MESSAGE SIGN (DAY)	TXDOT 6058 6001 BBU SYSTEM (EXTERNAL BATT CABINET) (EA)	TXDOT 6292 6003 RVDS (PRESENCE AND ADVANCE DET) (EA)
SIGNAL LAYOUT SHEET	8	4	1	11	3045	1	1	2	28	1	4
PROJECT TOTALS	8	4	1	11	3045	1	1	2	28	1	4

NO.	REVISION	BY	DATE
1	REVISED GROUND BOX TYPE	GIF	8/26/25

CITY OF HUTTO

JMT

TBPE FIRM REG. NO. F-16341

CITY OF HUTTO
TRAFFIC SIGNAL PROJECT
LIMMER LOOP AND INNOVATION BLVD

SUMMARY OF QUANTITIES

SHEET 1 OF 1

(C) 2024

STATE	CITY	COUNTY	SHEET NO.
TEXAS	HUTTO	WILLIAMSON	5

FILENAME: pw:\\jmt-pw.bentley.com:jmt-pw-01\Documents\Projects\2022\22-01219-001\Design\4 - Design\Plan Set\1. General\HUTTO*SUM01.DGN

DRAWING DATE: 8/26/2025

DISCLAIMER: The use of this standard is governed by the "Texas Engineering Practice Act". No warranty of any kind is made by TxDOT for any purpose whatsoever. TxDOT assumes no responsibility for the conversion of this standard to other formats or for incorrect results or damages resulting from its use.

DATE: 1/9/2025 $TIME$
FILE: pw:\\jmt-pw.bentley.com:jmt-pw-01\Documents\Projects\2022\22-01219-001\Design\4 - Design\Plan Set\1. General\HUTTO_SOSS01.DGN.dgn

SUMMARY OF SMALL SIGNS

SM RD SGN ASSM TY XXXXX (X) XX (X-XXXX)

PLAN SHEET NO.	SIGN NO.	SIGN NOMENCLATURE	SIGN	DIMENSIONS	FLAT ALUMINUM (TYPE A)	EXAL ALUMINUM (TYPE G)	POST TYPE FRP = Fiberglass TWT = Thin-Wall 10BWG = 10 BWG S80 = Sch 80	POSTS 1 or 2	ANCHOR TYPE UA=Universal Conc UB=Universal Bolt SA=Slipbase-Conc SB=Slipbase-Bolt WS=Wedge Steel WP=Wedge Plastic	MOUNTING DESIGNATION PREFABRICATED P = "Plain" T = "T" U = "U"	1EXT or 2EXT = # of Ext BM = Extruded Wind Beam WC = 1.12 #/ft Wing Channel EXAL= Extruded Alum Sign Panels	BRIDGE MOUNT CLEARANCE SIGNS (See Note 2) TY = TYPE TY N TY S
50	1	W3-3		36" X 36"	X		TWT	1	WS	T		
50	2	W3-3		36" X 36"	X		TWT	1	WS	T		
50	3	W3-3	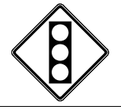	36" X 36"	X		TWT	1	WS	T		
50	4	W3-3		36" X 36"	X		TWT	1	WS	T		

ALUMINUM SIGN BLANKS THICKNESS	
Square Feet	Minimum Thickness
Less than 7.5	0.100"
7.5 or Greater	0.125"

The Standard Highway Sign Designs for Texas (SHSD) can be found at the following website.

http://www.txdot.gov/

NOTE:

1. Sign supports shall be located as shown on the plans, except that the Engineer may shift the sign supports, within design guidelines, where necessary to secure a more desirable location or to avoid conflict with utilities. Unless otherwise shown on the plans, the Contractor shall stake and the Engineer will verify all sign support locations.
2. For installation of bridge mount clearance signs, see Bridge Mounted Clearance Sign Assembly (BMCS)Standard Sheet.
3. For Sign Support Descriptive Codes, see Sign Mounting Details Small Roadside Signs General Notes & Details SMD(GEN).

Texas Department of Transportation

Traffic Operations Division Standard

SUMMARY OF SMALL SIGNS

SOSS

FILE: sums16.dgn	DN: TxDOT	CK: TxDOT	DW: TxDOT	CK: TxDOT
©TxDOT May 1987	CONT	SECT	JOB	HIGHWAY
REVISIONS				HWY
4-16	DIST	COUNTY		SHEET NO.
8-16				6

18

BEGINNING CHAIN LIMMER DESCRIPTION
==========
POINT LL001 N 10,179,067.2645 E 3,165,409.6742 STA 5+00.00
COURSE FROM LL001 TO LL002 S 82° 37' 59.84" E DIST 1,800.0000
POINT LL002 N 10,178,836.4696 E 3,167,194.8167 STA 23+00.00
==========
ENDING CHAIN LIMMER DESCRIPTION

BEGINNING CHAIN INNOVATION-S DESCRIPTION
==========
POINT IB001 N 10,178,624.4226 E 3,166,298.6195 STA 4+75.00
COURSE FROM IB001 TO IB002 N 7° 25' 23.73" E DIST 325.2067
POINT IB002 N 10,178,946.9037 E 3,166,340.6356 STA 8+00.21
==========
ENDING CHAIN INNOVATION-S DESCRIPTION

BEGINNING CHAIN INNOVATION-N DESCRIPTION
==========
POINT IB003 N 10,178,945.3227 E 3,166,352.8423 STA 5+00.00
COURSE FROM IB003 TO PC NIB-CV01 N 7° 21' 15.53" E DIST 135.9366
CURVE DATA

CURVE NIB-CV01
P.I. STATION 7+30.75 N 10,179,174.1753 E 3,166,382.3796
DELTA = 10° 49' 57.13" (RT)
DEGREE = 5° 43' 46.48"
TANGENT = 94.8143
LENGTH = 189.0634
RADIUS = 1,000.0000
EXTERNAL = 4.4848
LONG CHORD = 188.7820
MID. ORD. = 4.4648
P.C. STATION 6+35.94 N 10,179,080.1410 E 3,166,370.2429
P.T. STATION 8+25.00 N 10,179,264.2531 E 3,166,411.9727
C.C. N 10,178,952.1362 E 3,167,362.0164
BACK = N 7° 21' 15.53" E
AHEAD = N 18° 11' 12.67" E
CHORD BEAR = N 12° 46' 14.10" E
==========
ENDING CHAIN INNOVATION-N DESCRIPTION

STATE OF TEXAS
ELLIOT R. CUDE
131513
LICENSED
PROFESSIONAL ENGINEER
1/9/2025

CITY OF HUTTO

JMT
TBPE FIRM REG. NO. F-16341

CITY OF HUTTO
TRAFFIC SIGNAL PROJECT
LIMMER LOOP AND INNOVATION BLVD

HALN DATA

SHEET 1 OF 1

(C) 2024	STATE	CITY	COUNTY	SHEET NO.
	TEXAS	HUTTO	WILLIAMSON	7

DRAWING DATE: 1/9/2025 FILENAME: pw:\\jmt-pw.bentley.com:jmt-pw-01\Documents\Projects\2022\22-01219-001\Design\4 - Design\Plan Set\1. General\HUTTO*SUM02.DGN.dgn

FILENAME: pw:\\jmt-pw.bentley.com:jmt-pw-01\Documents\Projects\2022\22-01219-001\Design\4 - Design\Plan Set\2. TCP\HUTTO#c-SEQ.dgn
DRAWING DATE: 1/9/2025

CITY OF HUTTO TRAFFIC SIGNAL PROJECT AT LIMMER LOOP AND INNOVATION BLVD

TRAFFIC CONTROL PLAN SEQUENCE OF WORK

1. INSTALL ADVANCE WARNING SIGNS FOR SIGNAL WORK PER WZ(BTS-2)-13 ALONG PROJECT LIMITS. SIGNS MAY BE ADJUSTED DUE TO FIELD CONDITIONS AND SAFETY TO TRAVELING PUBLIC.

2. INSTALL SW3P ITEMS ACCORDING TO PLANS.

3. UTILIZE STANDARD SHEET TCP(2-1A)-18 (WORK SPACE NEAR SHOULDER) TO MANAGE TRAFFIC DURING OPERATIONS. ADDITIONAL SIGNS, BARRICADES AND/OR OTHER CHANNELIZING DEVICES MAY BE NEEDED, REQUIRED AND/OR ADJUSTED TO MATCH FIELD CONDITIONS AS DIRECTED BY THE ENGINEER.

4. CONSTRUCT CONDUIT BORES, CONDUIT TRENCHING, TRAFFIC SIGNAL FOUNDATION CONSTRUCTION, AND GROUND BOXES.

5. CONSTRUCT ABOVEGROUND SIGNAL POLES AND OTHER APPURTENANCES AS SHOWN IN THE PLANS.

6. CONSTRUCT WIRING AS REQUIRED.

7. CONNECT ELECTRICAL SERVICES.

8. PERFORM QUALITY CHECKS.

9. REMOVE EXISTING PAVEMENT MARKINGS AS SHOWN ON THE PLANS.

10. INSTALL PERMANENT PAVEMENT MARKINGS AND SIGNS AS SHOWN ON THE PLANS.

11. SET UP AND OPERATE TWO PORTABLE CHANGEABLE MESSAGE SIGNS (ONE ALONG EACH DIRECTION OF LIMMER LOOP APPROACHING THE INTERSECTION). SHOW MESSAGE INDICATING NEW TRAFFIC PATTERN AHEAD. OPERATE FOR 14 DAYS.

12. ONCE THE PORTABLE CHANGEABLE MESSAGE SIGNS ARE OPERATING, INITIATE FLASHING SIGNAL OPERATION TO SHOW FLASHING YELLOW ALONG LIMMER LOOP AND FLASHING RED ALONG INNOVATION BLVD. OPERATE FOR 14 DAYS.

13. AFTER THE 14 DAY PERIOD IS COMPLETE, INITIATE PERMANENT SIGNAL OPERATIONS AND REMOVE EXISTING STOP SIGNS ALONG INNOVATION BLVD.

14. REMOVE ALL TEMPORARY EROSION CONTROL DEVICES.

15. INSTALL BLOCK SODDING.

16. REMOVE ALL TRAFFIC CONTROL DEVICES, WORK ZONE SIGNAGE, AND BARRICADES.

17. BEGIN SIGNAL TEST PERIOD. PER THE GENERAL NOTES, A TEST PERIOD SHALL BE CONDUCTED ON THE SIGNALS FOR A MINIMUM OF 30 CALENDAR DAYS. EQUIPMENT FAILURES DURING THIS TIME WILL CAUSE THE TEST PERIOD TO START OVER.

NOTES:

1. CONSTRUCTION SHALL CEASE DAILY DURING PEAK TRAVEL PERIODS.

2. CONTRACTOR SHALL PROVIDE (2) PORTABLE CHANGEABLE MESSAGE SIGNS. SIGNS SHALL BE ABLE TO COMMUNICATE THE START DATE AND TIMES OF CONSTRUCTION AS WELL AS OTHER INFORMATION. LOCATION OF PORTABLE CHANGEABLE MESSAGE SIGNS SHALL BE APPROVED BY THE CITY OF HUTTO ENGINEERING DEPARTMENT.

STATE OF TEXAS
ELLIOT R. CUDE
131513
LICENSED
PROFESSIONAL ENGINEER

1/9/2025

CITY OF HUTTO

JMT
TBPE FIRM REG. NO. F-16341

CITY OF HUTTO
TRAFFIC SIGNAL PROJECT
LIMMER LOOP AND INNOVATION BLVD

SEQUENCE OF CONSTRUCTION

SHEET 1 OF 1

(C) 2024

STATE	CITY	COUNTY	SHEET NO.
TEXAS	HUTTO	WILLIAMSON	8

DISCLAIMER:
The use of this standard is governed by the "Texas Engineering Practice Act". No warranty of any kind is made by TxDOT for any purpose whatsoever. TxDOT assumes no responsibility for the conversion of this standard to other formats or for incorrect results or damages resulting from its use.

DATE: 1/9/2025 $TIME$
FILE: pw:\\jmt-pw.bentley.com:jmt-pw-01\Documents\Projects\2022\22-01219-001\Design\04 - Design\Plan Set\2. TCP\Standards\bc-21.dgn

BARRICADE AND CONSTRUCTION (BC) STANDARD SHEETS GENERAL NOTES:

1. The Barricade and Construction Standard Sheets (BC sheets) are intended to show typical examples for placement of temporary traffic control devices, construction pavement markings, and typical work zone signs. The information contained in these sheets meet or exceed the requirements shown in the "Texas Manual on Uniform Traffic Control Devices" (TMUTCD).

2. The development and design of the Traffic Control Plan (TCP)is the responsibility of the Engineer.

3. The Contractor may propose changes to the TCP that are signed and sealed by a licensed professional engineer for approval. The Engineer may develop, sign and seal Contractor proposed changes.

4. The Contractor is responsible for installing and maintaining the traffic control devices as shown in the plans. The Contractor may not move or change the approximate location of any device without the approval of the Engineer.

5. Geometric design of lane shifts and detours should, when possible, meet the applicable design criteria contained in manuals such as the American Association of State Highway and Transportation Officials (AASHTO), "A Policy on Geometric Design of Highways and Streets," the TxDOT "Roadway Design Manual" or engineering judgment.

6. When projects abut, the Engineer(s) may omit the END ROAD WORK, TRAFFIC FINES DOUBLE, and other advance warning signs if the signing would be redundant and the work areas appear continuous to the motorists. If the adjacent project is completed first, the Contractor shall erect the necessary warning signs as shown on these sheets, the TCP sheets or as directed by the Engineer. The BEGIN ROAD WORK NEXT X MILES sign shall be revised to show appropriate work zone distance.

7. The Engineer may require duplicate warning signs on the median side of divided highways where median width will permit and traffic volumes justify the signing.

8. All signs shall be constructed in accordance with the details found in the "Standard Highway Sign Designs for Texas," latest edition. Sign details not shown in this manual shall be shown in the plans or the Engineer shall provide a detail to the Contractor before the sign is manufactured.

9. The temporary traffic control devices shown in the illustrations of the BC sheets are examples. As necessary, the Engineer will determine the most appropriate traffic control devices to be used.

10. Where highway construction or maintenance work is being undertaken, other than mobile operations as defined by the Texas Manual on Uniform Traffic Control Devices, CSJ limit signs are required. CSJ limit signs are shown on BC(2). The OBEY WARNING SIGNS STATE LAW sign, STAY ALERT TALK OR TEXT LATER and the WORK ZONE TRAFFIC FINES DOUBLE sign with plaque shall be erected in advance of the CSJ limits. The BEGIN ROAD WORK NEXT X MILES, CONTRACTOR and END ROAD WORK signs shall be erected at or near the CSJ limits. For mobile operations, CSJ limit signs are not required.

11. Traffic control devices should be in place only while work is actually in progress or a definite need exists.

12. The Engineer has the final decision on the location of all traffic control devices.

13. Inactive equipment and work vehicles, including workers' private vehicles must be parked away from travel lanes. They should be as close to the right-of-way line as possible, or located behind a barrier or guardrail, or as approved by the Engineer.

WORKER SAFETY NOTES:

1. Workers on foot who are exposed to traffic or to construction equipment within the right-of-way shall wear high-visibility safety apparel meeting the requirements of ISEA "American National Standard for High-Visibility Apparel," or equivalent revisions, and labeled as ANSI 107-2004 standard performance for Class 2 or 3 risk exposure. Class 3 garments should be considered for high traffic volume work areas or night time work.

2. Except in emergency situations, flagger stations shall be illuminated when flagging is used at night.

COMPLIANT WORKZONE TRAFFIC CONTROL DEVICES

1. Only pre-qualified products shall be used. The "Compliant Work Zone Traffic Control Devices List" (CWZTCD) describes pre-qualified products and their sources.

2. Work zone traffic control devices shall be compliant with the Manual for Assessing safety Hardware (MASH).

THE DOCUMENTS BELOW CAN BE FOUND ON-LINE AT http://www.txdot.gov
COMPLIANT WORK ZONE TRAFFIC CONTROL DEVICES LIST (CWZTCD)
DEPARTMENTAL MATERIAL SPECIFICATIONS (DMS)
MATERIAL PRODUCER LIST (MPL)
ROADWAY DESIGN MANUAL - SEE "MANUALS (ONLINE MANUALS)"
STANDARD HIGHWAY SIGN DESIGNS FOR TEXAS (SHSD)
TEXAS MANUAL ON UNIFORM TRAFFIC CONTROL DEVICES (TMUTCD)
TRAFFIC ENGINEERING STANDARD SHEETS

SHEET 1 OF 12

Texas Department of Transportation | Traffic Safety Division Standard

BARRICADE AND CONSTRUCTION GENERAL NOTES AND REQUIREMENTS

BC(1)-21

FILE: bc-21.dgn	DN: TxDOT	CK: TxDOT	DW: TxDOT	CK: TxDOT
©TxDOT November 2002	CONT	SECT	JOB	HIGHWAY
REVISIONS 4-03 7-13 9-07 8-14 5-10 5-21	DIST	COUNTY		SHEET NO.
		WILLIAMSON		9

95

DISCLAIMER:
The use of this standard is governed by the "Texas Engineering Practice Act". No warranty of any kind is made by TxDOT for any purpose whatsoever. TxDOT assumes no responsibility for the conversion of this standard to other formats or for incorrect results or damages resulting from its use.

DATE: 1/9/2025 $TIME$
FILE: pw:\\jmt-pw.bentley.com:jmt-pw-01\Documents\Projects\2022\22-01219-001\Design\4 - Design Plan Set\2. TCP\Standards\bc-21.dgn

TYPICAL LOCATION OF CROSSROAD SIGNS

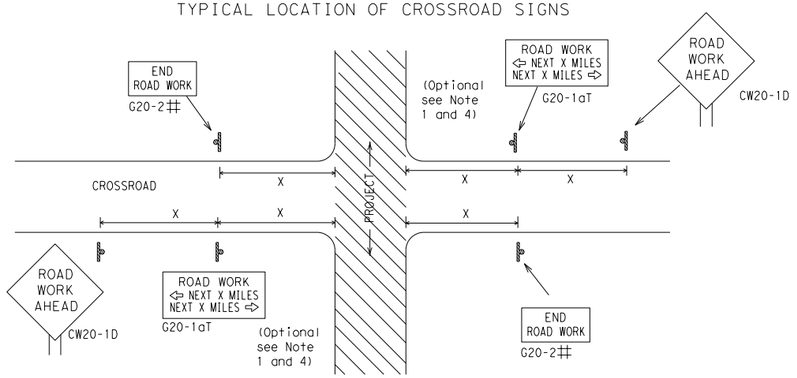

May be mounted on back of "ROAD WORK AHEAD"(CW20-1D) sign with approval of Engineer. (See note 2 below)

1. The typical minimum signing on a crossroad approach should be a "ROAD WORK AHEAD" (CW20-1D)sign and a (G20-2) "END ROAD WORK" sign, unless noted otherwise in plans.
2. The Engineer may use the reduced size 36" x 36" ROAD WORK AHEAD (CW20-1D) sign mounted back to back with the reduced size 36" x 18" "END ROAD WORK"(G20-2) sign on low volume crossroads (see Note 4 under "Typical Construction Warning Sign Size and Spacing"). See the "Standard Highway Sign Designs for Texas" manual for sign details. The Engineer may omit the advance warning signs on low volume crossroads. The Engineer will determine whether a road is low volume as per TMUTCD Part 5. This information shall be shown in the plans.
3. Based on existing field conditions, the Engineer/Inspector may require additional signs such as FLAGGER AHEAD, LOOSE GRAVEL, or other appropriate signs. When additional signs are required, these signs will be considered part of the minimum requirements. The Engineer/Inspector will determine the proper location and spacing of any sign not shown on the BC sheets, Traffic Control Plan sheets or the Work Zone Standard Sheets.
4. The "ROAD WORK NEXT X MILES"(G20-1aT)sign shall be required at high volume crossroads to advise motorists of the length of construction in either direction from the intersection. The Engineer will determine whether a roadway is considered high volume.
5. Additional traffic control devices may be shown elsewhere in the plans for higher volume crossroads.
6. When work occurs in the intersection area, appropriate traffic control devices, as shown elsewhere in the plans or as determined by the Engineer/Inspector, shall be in place.

T-INTERSECTION

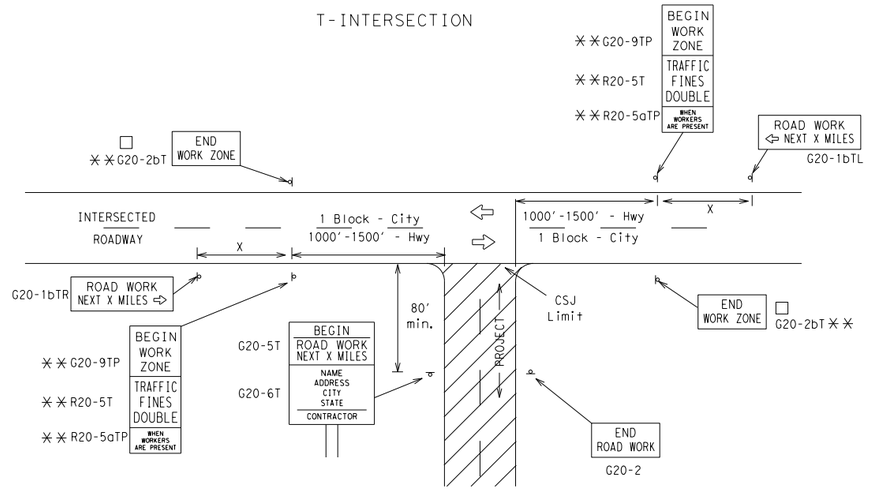

CSJ LIMITS AT T-INTERSECTION

1. The Engineer will determine the types and location of any additional traffic control devices, such as a flagger and accompanying signs, or other signs, that should be used when work is being performed at or near an intersection.
2. If construction closes the road at a T-intersection, the Contractor shall place the "CONTRACTOR NAME"(G20-6T) sign behind the Type 3 Barricades for the road closure (see BC(10) also). The "ROAD WORK NEXT X MILES" left arrow(G20-1bTL) and "ROAD WORK NEXT X MILES" right arrow (G20-1bTR)" signs shall be replaced by the detour signing called for in the plans.

TYPICAL CONSTRUCTION WARNING SIGN SIZE AND SPACING[1,5,6]

SIZE

Sign Number or Series	Conventional Road	Expressway/ Freeway
CW20[4] CW21 CW22 CW23 CW25	48" x 48"	48" x 48"
CW1, CW2, CW7, CW8, CW9, CW11, CW14	36" x 36"	48" x 48"
CW3, CW4, CW5, CW6, CW8-3, CW10, CW12	48" x 48"	48" x 48"

SPACING

Posted Speed	Sign △ Spacing "X"
MPH	Feet (Apprx.)
30	120
35	160
40	240
45	320
50	400
55	500[2]
60	600[2]
65	700[2]
70	800[2]
75	900[2]
80	1000[2]
✳	✳[3]

✳ For typical sign spacings on divided highways, expressways and freeways, see Part 6 of the "Texas Manual on Uniform Traffic Control Devices" (TMUTCD) typical application diagrams or TCP Standard Sheets.

△ Minimum distance from work area to first Advance Warning sign nearest the work area and/or distance between each additional sign.

GENERAL NOTES

1. Special or larger size signs may be used as necessary.
2. Distance between signs should be increased as required to have 1500 feet advance warning.
3. Distance between signs should be increased as required to have 1/2 mile or more advance warning.
4. 36" x 36" "ROAD WORK AHEAD" (CW20-1D)signs may be used on low volume crossroads at the discretion of the Engineer as per TMUTCD Part 5. See Note 2 under "Typical Location of Crossroad Signs".
5. Only diamond shaped warning sign sizes are indicated.
6. See sign size listing in "TMUTCD", Sign Appendix or the "Standard Highway Sign Designs for Texas" manual for complete list of available sign design sizes.

WORK AREAS IN MULTIPLE LOCATIONS WITHIN CSJ LIMITS

SAMPLE LAYOUT OF SIGNING FOR WORK BEGINNING AT THE CSJ LIMITS

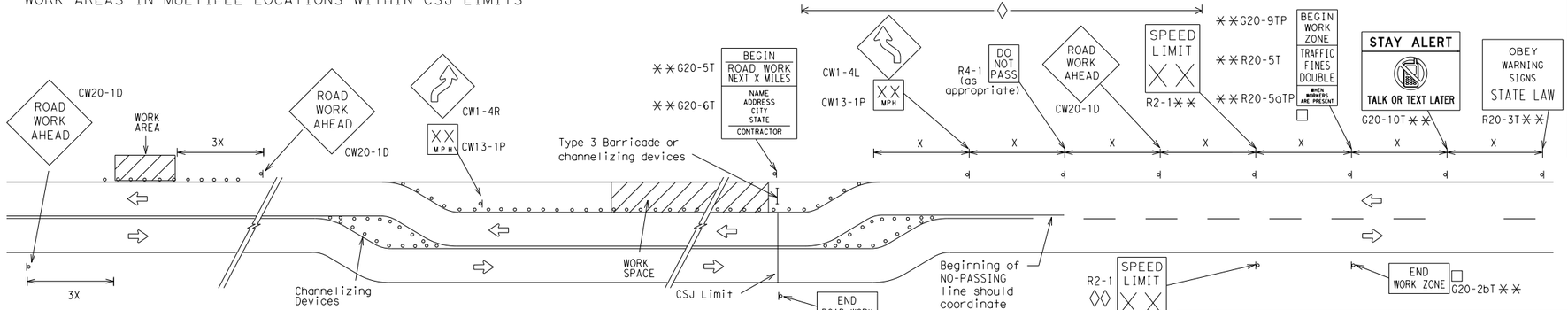

When extended distances occur between minimal work spaces, the Engineer/Inspector should ensure additional "ROAD WORK AHEAD"(CW20-1D)signs are placed in advance of these work areas to remind drivers they are still within the project limits. See the applicable TCP sheets for exact location and spacing of signs and channelizing devices.

SAMPLE LAYOUT OF SIGNING FOR WORK BEGINNING DOWNSTREAM OF THE CSJ LIMITS

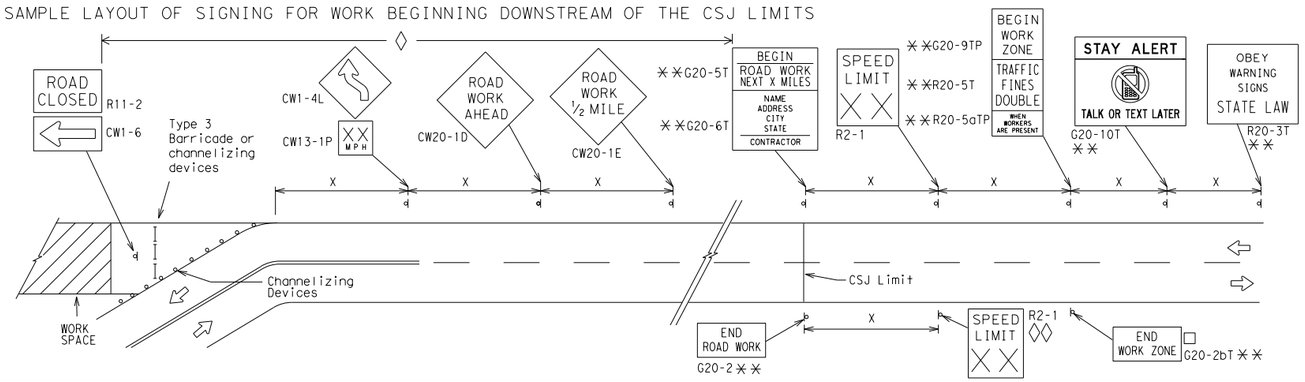

NOTES

The Contractor shall determine the appropriate distance to be placed on the G20-1 series signs and "BEGIN ROAD WORK NEXT X MILES"(G20-5T)sign for each specific project. This distance shall replace the "X" and shall be rounded to the nearest whole mile with the approval of the Engineer. No decimals shall be used.

☐ The "BEGIN WORK ZONE"(G20-9TP) and "END WORK ZONE" (G20-2bT) shall be used as shown on the sample layout when advance signs are required outside the CSJ Limits. They inform the motorist of entering or leaving a part of the work zone lying outside the CSJ Limits where traffic fines may double if workers are present.

✳✳ CSJ limit signing is required for highway construction and maintenance work, with the exception of mobile operations.

◊ Area for placement of "ROAD WORK AHEAD" (CW20-1D)sign and other signs or devices as called for on the Traffic Control Plan.

◊◊ Contractor will install a regulatory speed limit sign at the end of the work zone.

LEGEND	
⊢⊣	Type 3 Barricade
○ ○ ○	Channelizing Devices
▬	Sign
X	See Typical Construction Warning Sign Size and Spacing chart or the TMUTCD for sign spacing requirements.

Texas Department of Transportation | Traffic Safety Division Standard

BARRICADE AND CONSTRUCTION PROJECT LIMIT

BC(2)-21

FILE: bc-21.dgn	DN: TxDOT	CK: TxDOT	DW: TxDOT	CK: TxDOT
©TxDOT November 2002	CONT	SECT	JOB	HIGHWAY
REVISIONS				
9-07 8-14	DIST	COUNTY		SHEET NO.
7-13 5-21		WILLIAMSON		10

96

DISCLAIMER:
The use of this standard is governed by the "Texas Engineering Practice Act". No warranty of any kind is made by TxDOT for any purpose whatsoever. TxDOT assumes no responsibility for the conversion of this standard to other formats or for incorrect results or damages resulting from its use.

DATE: 1/9/2025 $TIME$
FILE: pw:\\jmt-pw.bentley.com:jmt-pw-01\Documents\Projects\2022\22-01219-001\Design\Standards\bc-21.dgn

TYPICAL APPLICATION OF WORK ZONE SPEED LIMIT SIGNS

Work zone speed limits shall be regulatory, established in accordance with the "Procedures for Establishing Speed Zones," and approved by the Texas Transportation Commission, or by City Ordinance when within Incorporated City Limits.

Reduced speeds should only be posted in the vicinity of work activity and not throughout the entire project.

Regulatory work zone speed signs (R2-1) shall be removed or covered during periods when they are not needed.

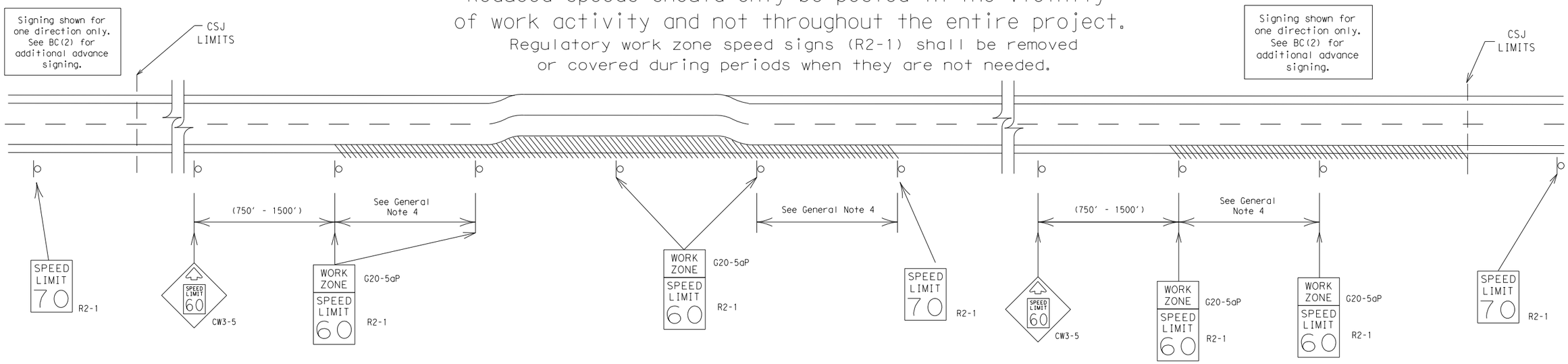

GUIDANCE FOR USE:

LONG/INTERMEDIATE TERM WORK ZONE SPEED LIMITS

This type of work zone speed limit should be included on the design of the traffic control plans when restricted geometrics with a lower design speed are present in the work zone and modification of the geometrics to a higher design speed is not feasible.

Long/Intermediate Term Work Zone Speed Limit signs, when approved as described above, should be posted and visible to the motorist when work activity is present. Work activity may also be defined as a change in the roadway that requires a reduced speed for motorists to safely negotiate the work area, including:

a) rough road or damaged pavement surface
b) substantial alteration of roadway geometrics (diversions)
c) construction detours
d) grade
e) width
f) other conditions readily apparent to the driver

As long as any of these conditions exist, the work zone speed limit signs should remain in place.

SHORT TERM WORK ZONE SPEED LIMITS

This type of work zone speed limit may be included on the design of the traffic control plans when workers or equipment are not behind concrete barrier, when work activity is within 10 feet of the traveled way or actually in the traveled way.

Short Term Work Zone Speed Limit signs should be posted and visible to the motorists only when work activity is present. When work activity is not present, signs shall be removed or covered.
(See Removing or Covering on BC(4)).

GENERAL NOTES

1. Regulatory work zone speed limits should be used only for sections of construction projects where speed control is of major importance.
2. Regulatory work zone speed limit signs shall be placed on supports at a 7 foot minimum mounting height.
3. Speed zone signs are illustrated for one direction of travel and are normally posted for each direction of travel.
4. Frequency of work zone speed limit signs should be:
   40 mph and greater 0.2 to 2 miles
   35 mph and less 0.2 to 1 mile
5. Regulatory speed limit signs shall have black legend and border on a white reflective background (See "Reflective Sheeting" on BC(4)).
6. Fabrication, erection and maintenance of the"ADVANCE SPEED LIMIT"(CW3-5)sign, "WORK ZONE"(G20-5aP) plaque and the "SPEED LIMIT"(R2-1)signs shall not be paid for directly, but shall be considered subsidiary to Item 502.
7. Turning signs from view, laying signs over or down will not be allowed, unless as otherwise noted under "REMOVING OR COVERING" on BC(4).
8. Techniques that may help reduce traffic speeds include but are not limited to:
   A. Law enforcement.
   B. Flagger stationed next to sign.
   C. Portable changeable message sign (PCMS).
   D. Low-power (drone) radar transmitter.
   E. Speed monitor trailers or signs.
9. Speeds shown on details above are for illustration only. Work Zone Speed Limits should only be posted as approved for each project.
10. For more specific guidance concerning the type of work, work zone conditions and factors impacting allowable regulatory construction speed zone reduction see TxDOT form #1204 in the TxDOT e-form system.

Texas Department of Transportation | Traffic Safety Division Standard

BARRICADE AND CONSTRUCTION WORK ZONE SPEED LIMIT

BC(3)-21

FILE: bc-21.dgn	DN: TxDOT	CK: TxDOT	DW: TxDOT	CK: TxDOT
©TxDOT November 2002	CONT	SECT	JOB	HIGHWAY
REVISIONS 9-07 8-14 7-13 5-21	DIST	COUNTY		SHEET NO.
		WILLIAMSON		11

97

DISCLAIMER:
The use of this standard is governed by the "Texas Engineering Practice Act". No warranty of any kind is made by TxDOT for any purpose whatsoever. TxDOT assumes no responsibility for the conversion of this standard to other formats or for incorrect results or damages resulting from its use.

DATE: 1/9/2025 $TIME$
FILE: pw:\\jmt-pw.bentley.com:jmt-pw-01\Documents\Projects\2022\22-01219-001\Design\4 - Design\Plan Set\2. TCP\Standards\bc-21.dgn

TYPICAL MINIMUM CLEARANCES FOR LONG TERM AND INTERMEDIATE TERM SIGNS

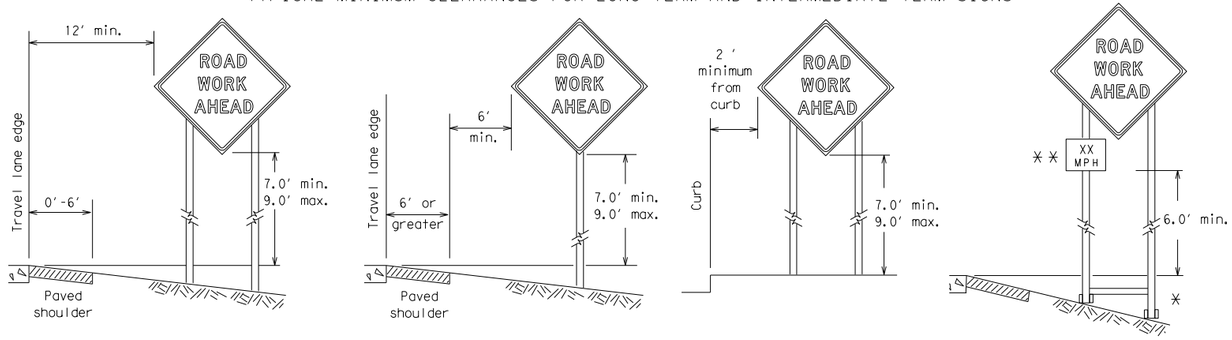

⁎ When placing skid supports on unlevel ground, the leg post lengths must be adjusted so the sign appears straight and plumb. Objects shall NOT be placed under skids as a means of leveling.

⁎⁎ When plaques are placed on dual-leg supports, they should be attached to the upright nearest the travel lane. Supplemental plaques (advisory or distance) should not cover the surface of the parent sign.

ATTACHMENT FOR SIGN SUPPORTS

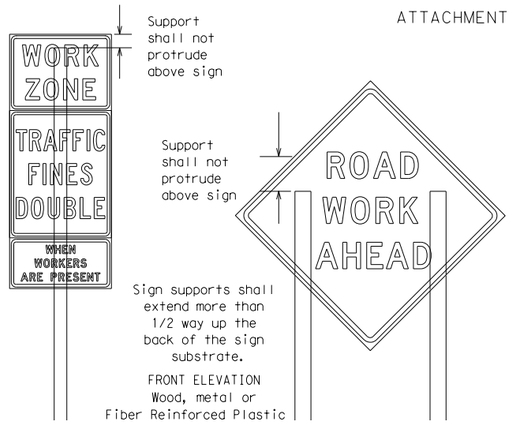

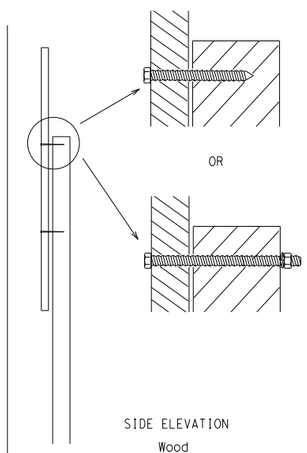

Attachment to wooden supports will be by bolts and nuts or screws. Use TxDOT's or manufacturer's recommended procedures for attaching sign substrates to other types of sign supports

Nails shall NOT be allowed. Each sign shall be attached directly to the sign support. Multiple signs shall not be joined or spliced by any means. Wood supports shall not be extended or repaired by splicing or other means.

Splicing embedded perforated square metal tubing in order to extend post height will only be allowed when the splice is made using four bolts, two above and two below the spice point. Splice must be located entirely behind the sign substrate, not near the base of the support. Splice insert lengths should be at least 5 times nominal post size, centered on the splice and of at least the same gauge material.

STOP/SLOW PADDLES

1. STOP/SLOW paddles are the primary method to control traffic by flaggers. The STOP/SLOW paddle size should be 24" x 24".
2. STOP/SLOW paddles shall be retroreflectorized when used at night.
3. STOP/SLOW paddles may be attached to a staff with a minimum length of 6' to the bottom of the sign.
4. Any lights incorporated into the STOP or SLOW paddle faces shall only be as specifically described in Section 6E.03 Hand Signaling Devices in the TMUTCD.

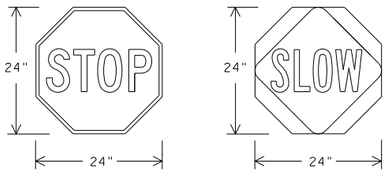

SHEETING REQUIREMENTS (WHEN USED AT NIGHT)		
USAGE	COLOR	SIGN FACE MATERIAL
BACKGROUND	RED	TYPE B OR C SHEETING
BACKGROUND	ORANGE	TYPE B_{FL} OR C_{FL} SHEETING
LEGEND & BORDER	WHITE	TYPE B OR C SHEETING
LEGEND & BORDER	BLACK	ACRYLIC NON-REFLECTIVE FILM

CONTRACTOR REQUIREMENTS FOR MAINTAINING PERMANENT SIGNS WITHIN THE PROJECT LIMITS

1. Permanent signs are used to give notice of traffic laws or regulations, call attention to conditions that are potentially hazardous to traffic operations, show route designations, destinations, directions, distances, services, points of interest, and other geographical, recreational, specific service (LOGO), or cultural information. Drivers proceeding through a work zone need the same, if not better route guidance as normally installed on a roadway without construction.
2. When permanent regulatory or warning signs conflict with work zone conditions, remove or cover the permanent signs until the permanent sign message matches the roadway condition. For details for covering large guide signs see the TS-CD standard.
3. When existing permanent signs are moved and relocated due to construction purposes, they shall be visible to motorists at all times.
4. If existing signs are to be relocated on their original supports, they shall be installed on crashworthy bases as shown on the SMD Standard sheets. The signs shall meet the required mounting heights shown on the BC Sheets or the SMD Standards. This work should be paid for under the appropriate pay item for relocating existing signs.
5. If permanent signs are to be removed and relocated using temporary supports, the Contractor shall use crashworthy supports as shown on the BC standard sheets, TLRS standard sheets or the CWZTCD list. The signs shall meet the required mounting heights shown on the BC, or the SMD standard sheets during construction. This work should be paid for under the appropriate pay item for relocating existing signs.
6. Any sign or traffic control device that is struck or damaged by the Contractor or his/her construction equipment shall be replaced as soon as possible by the Contractor to ensure proper guidance for the motorists. This will be subsidiary to Item 502.

GENERAL NOTES FOR WORK ZONE SIGNS

1. Contractor shall install and maintain signs in a straight and plumb condition and/or as directed by the Engineer.
2. Wooden sign posts shall be painted white.
3. Barricades shall NOT be used as sign supports.
4. All signs shall be installed in accordance with the plans or as directed by the Engineer. Signs shall be used to regulate, warn, and guide the traveling public safely through the work zone.
5. The Contractor may furnish either the sign design shown in the plans or in the "Standard Highway Sign Designs for Texas" (SHSD). The Engineer/Inspector may require the Contractor to furnish other work zone signs that are shown in the TMUTCD but may have been omitted from the plans. Any variation in the plans shall be documented by written agreement between the Engineer and the Contractor's Responsible Person. All changes must be documented in writing before being implemented. This can include documenting the changes in the Inspector's TxDOT diary and having both the Inspector and Contractor initial and date the agreed upon changes.
6. The Contractor shall furnish sign supports listed in the "Compliant Work Zone Traffic Control Device List" (CWZTCD) for small roadside signs. Supports for temporary large roadside signs shall meet the requirements detailed on the Temporary Large Roadside Signs (TLRS) standard sheets.The Contractor shall install the sign support in accordance with the manufacturer's recommendations. If there is a question regarding installation procedures, the Contractor shall furnish the Engineer a copy of the manufacturer's installation recommendations so the Engineer can verify the correct procedures are being followed.
7. The Contractor is responsible for installing signs on approved supports and replacing signs with damaged or cracked substrates and/or damaged or marred reflective sheeting as directed by the Engineer/Inspector.
8. Identification markings may be shown only on the back of the sign substrate. The maximum height of letters and/or company logos used for identification shall be 1 inch.
9. The Contractor shall replace damaged wood posts. New or damaged wood sign posts shall not be spliced.

DURATION OF WORK (as defined by the "Texas Manual on Uniform Traffic Control Devices" Part 6)

1. The types of sign supports, sign mounting height,the size of signs, and the type of sign substrates can vary based on the type of work being performed. The Engineer is responsible for selecting the appropriate size sign for the type of work being performed. The Contractor is responsible for ensuring the sign support, sign mounting height and substrate meets manufacturer's recommendations in regard to crashworthiness and duration of work requirements.
   a. Long-term stationary - work that occupies a location more than 3 days.
   b. Intermediate-term stationary - work that occupies a location more than one daylight period up to 3 days, or nighttime work lasting more than one hour.
   c. Short-term stationary - daytime work that occupies a location for more than 1 hour in a single daylight period.
   d. Short, duration - work that occupies a location up to 1 hour.
   e. Mobile - work that moves continuously or intermittently (stopping for up to approximately 15 minutes.)

SIGN MOUNTING HEIGHT

1. The bottom of Long-term/Intermediate-term signs shall be at least 7 feet, but not more than 9 feet, above the paved surface, except as shown for supplemental plaques mounted below other signs.
2. The bottom of Short-term/Short Duration signs shall be a minimum of 1 foot above the pavement surface but no more than 2 feet above the ground.
3. Long-term/Intermediate-term Signs may be used in lieu of Short-term/Short Duration signing.
4. Short-term/Short Duration signs shall be used only during daylight and shall be removed at the end of the workday or raised to appropriate Long-term/Intermediate sign height.
5. Regulatory signs shall be mounted at least 7 feet, but not more than 9 feet, above the paved surface regardless of work duration.

SIZE OF SIGNS

1. The Contractor shall furnish the sign sizes shown on BC (2) unless otherwise shown in the plans or as directed by the Engineer.

SIGN SUBSTRATES

1. The Contractor shall ensure the sign substrate is installed in accordance with the manufacturer's recommendations for the type of sign support that is being used. The CWZTCD lists each substrate that can be used on the different types and models of sign supports.
2. "Mesh" type materials are NOT an approved sign substrate, regardless of the tightness of the weave.
3. All wooden individual sign panels fabricated from 2 or more pieces shall have one or more plywood cleat, 1/2" thick by 6" wide, fastened to the back of the sign and extending fully across the sign. The cleat shall be attached to the back of the sign using wood screws that do not penetrate the face of the sign panel. The screws shall be placed on both sides of the splice and spaced at 6" centers. The Engineer may approve other methods of splicing the sign face.

REFLECTIVE SHEETING

1. All signs shall be retroreflective and constructed of sheeting meeting the color and retro-reflectivity requirements of DMS-8300 for rigid signs or DMS-8310 for roll-up signs. The web address for DMS specifications is shown on BC(1).
2. White sheeting, meeting the requirements of DMS-8300 Type A, shall be used for signs with a white background.
3. Orange sheeting, meeting the requirements of DMS-8300 Type B_{FL} or Type C_{FL}, shall be used for rigid signs with orange backgrounds.

SIGN LETTERS

1. All sign letters and numbers shall be clear, and open rounded type uppercase alphabet letters as approved by the Federal Highway Administration (FHWA) and as published in the "Standard Highway Sign Design for Texas" manual. Signs, letters and numbers shall be of first class workmanship in accordance with Department Standards and Specifications.

REMOVING OR COVERING

1. When sign messages may be confusing or do not apply, the signs shall be removed or completely covered.
2. Long-term stationary or intermediate stationary signs installed on square metal tubing may be turned away from traffic 90 degrees when the sign message is not applicable. This technique may not be used for signs installed in the median of divided highways or near any intersections where the sign may be seen from approaching traffic.
3. Signs installed on wooden skids shall not be turned at 90 degree angles to the roadway. These signs should be removed or completely covered when not required.
4. When signs are covered, the material used shall be opaque, such as heavy mil black plastic, or other materials which will cover the entire sign face and maintain their opaque properties under automobile headlights at night, without damaging the sign sheeting.
5. Burlap shall NOT be used to cover signs.
6. Duct tape or other adhesive material shall NOT be affixed to a sign face.
7. Signs and anchor stubs shall be removed and holes backfilled upon completion of work.

SIGN SUPPORT WEIGHTS

1. Where sign supports require the use of weights to keep from turning over, the use of sandbags with dry, cohesionless sand should be used.
2. The sandbags will be tied shut to keep the sand from spilling and to maintain a constant weight.
3. Rock, concrete, iron, steel or other solid objects shall not be permitted for use as sign support weights.
4. Sandbags should weigh a minimum of 35 lbs and a maximum of 50 lbs.
5. Sandbags shall be made of a durable material that tears upon vehicular impact. Rubber (such as tire inner tubes) shall NOT be used.
6. Rubber ballasts designed for channelizing devices should not be used for ballast on portable sign supports. Sign supports designed and manufactured with rubber bases may be used when shown on the CWZTCD list.
7. Sandbags shall only be placed along or laid over the base supports of the traffic control device and shall not be suspended above ground level or hung with rope, wire, chains or other fasteners. Sandbags shall be placed along the length of the skids to weigh down the sign support.
8. Sandbags shall NOT be placed under the skid and shall not be used to level sign supports placed on slopes.

FLAGS ON SIGNS

1. Flags may be used to draw attention to warning signs. When used, the flag shall be 16 inches square or larger and shall be orange or fluorescent red-orange in color. Flags shall not be allowed to cover any portion of the sign face.

Texas Department of Transportation | Traffic Safety Division Standard

BARRICADE AND CONSTRUCTION TEMPORARY SIGN NOTES

BC(4)-21

FILE: bc-21.dgn	DN: TxDOT	CK: TxDOT	DW: TxDOT	CK: TxDOT
©TxDOT November 2002	CONT	SECT	JOB	HIGHWAY
REVISIONS				
9-07 8-14	DIST	COUNTY		SHEET NO.
7-13 5-21		WILLIAMSON		12

DISCLAIMER:
The use of this standard is governed by the "Texas Engineering Practice Act". No warranty of any kind is made by TxDOT for any purpose whatsoever. TxDOT assumes no responsibility for the conversion of this standard to other formats or for incorrect results or damages resulting from its use.

DATE: 1/9/2025 $TIME$
FILE: pw:\\jmt-pw.bentley.com:jmt-pw-01\Documents\Projects\2022\22-01219-001\Design\14 - Design\Plan Set\2. TCP\Standards\bc-21.dgn

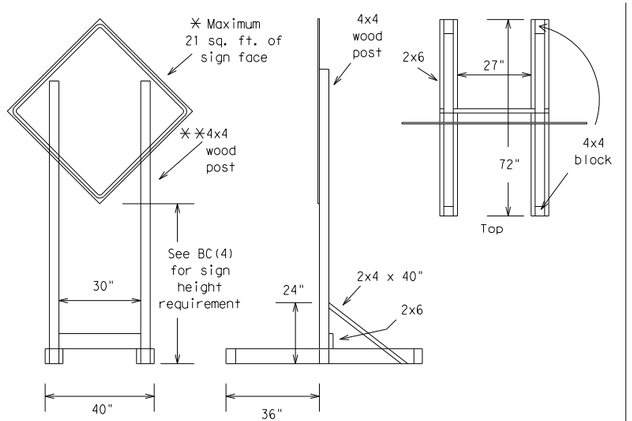

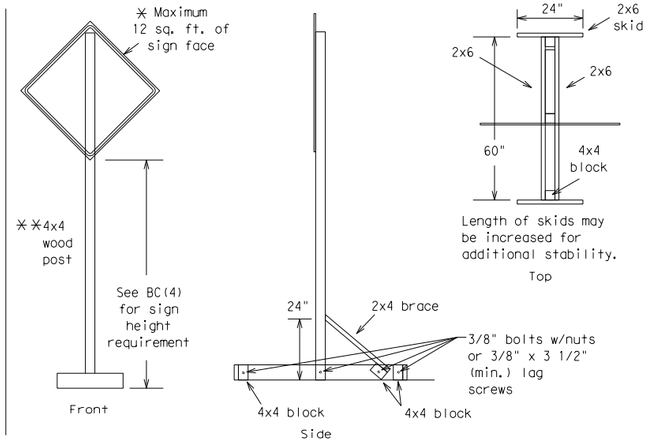

SKID MOUNTED WOOD SIGN SUPPORTS

* LONG/INTERMEDIATE TERM STATIONARY - PORTABLE SKID MOUNTED SIGN SUPPORTS

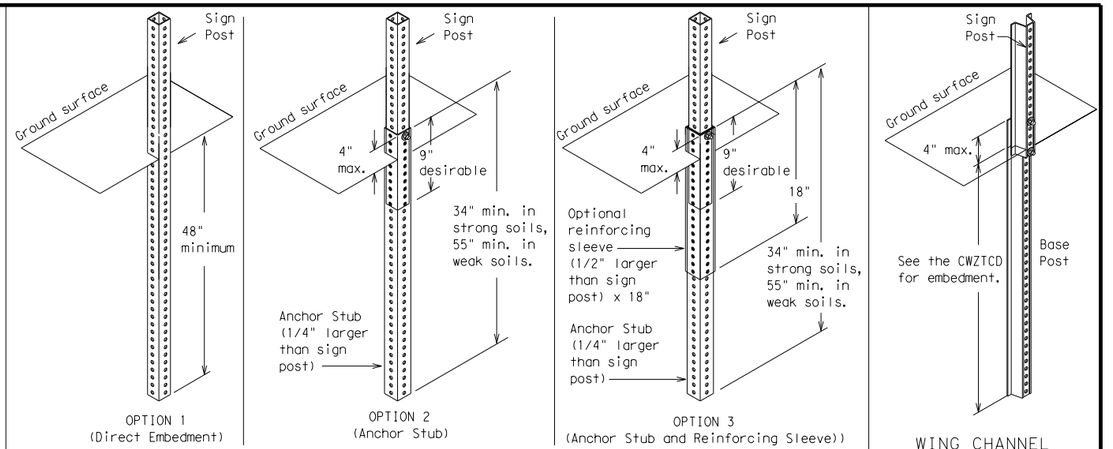

GROUND MOUNTED SIGN SUPPORTS

Refer to the CWZTCD and the manufacturer's installation procedure for each type sign support.
The maximum sign square footage shall adhere to the manufacturer's recommendation.
Two post installations can be used for larger signs.

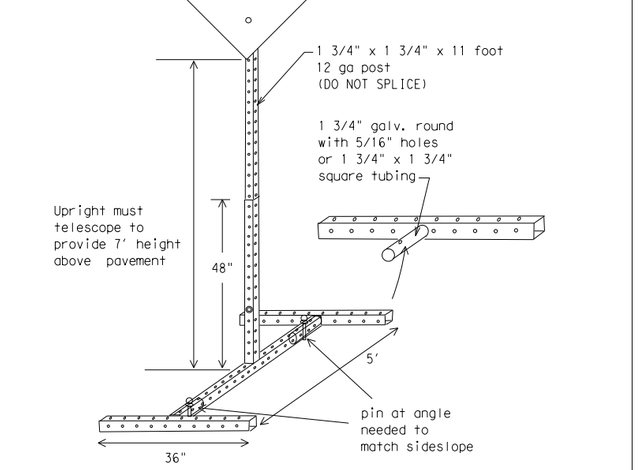

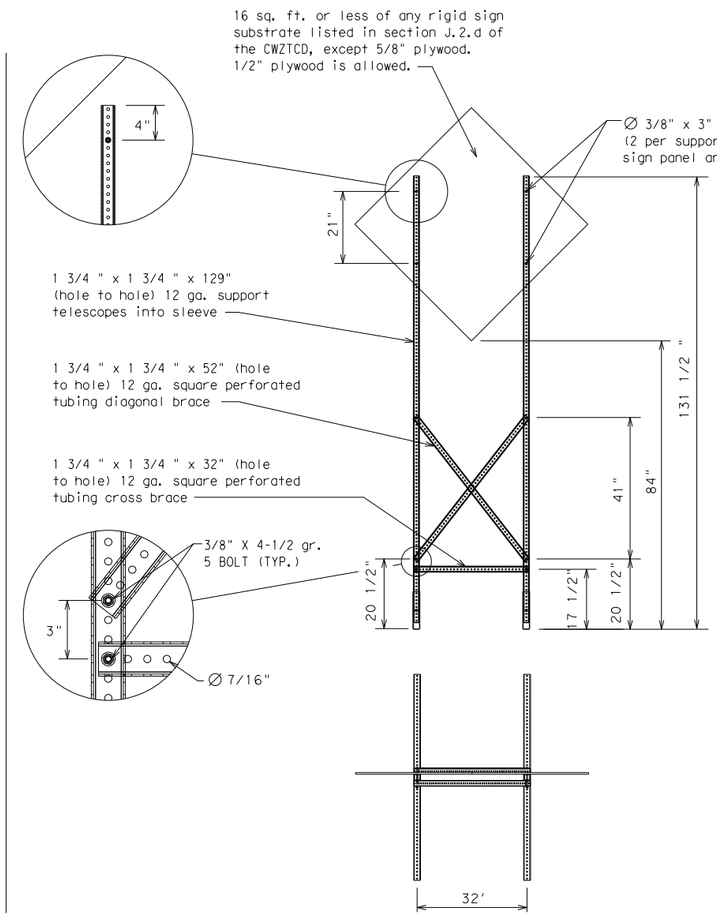

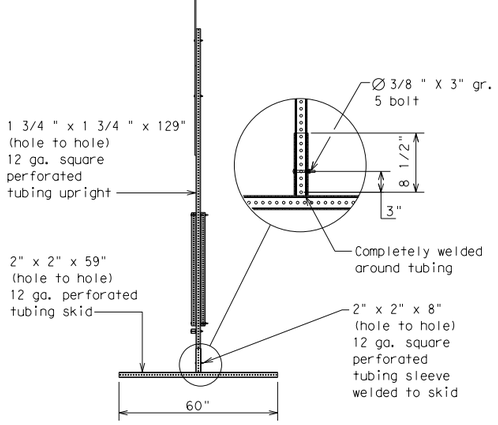

SKID MOUNTED PERFORATED SQUARE STEEL TUBING SIGN SUPPORTS

* LONG/INTERMEDIATE TERM STATIONARY - PORTABLE SKID MOUNTED SIGN SUPPORTS

WEDGE ANCHORS

Both steel and plastic Wedge Anchor Systems as shown on the SMD Standard Sheets may be used as temporary sign supports for signs up to 10 square feet of sign face. They may be set in concrete or in sturdy soils if approved by the Engineer. (See web address for "Traffic Engineering Standard Sheets" on BC(1)).

OTHER DESIGNS

MORE DETAILS OF APPROVED LONG/INTERMEDIATE AND SHORT TERM SUPPORTS CAN BE FOUND ON THE CWZTCD LIST. SEE BC(1) FOR WEBSITE LOCATION.

GENERAL NOTES

1. Nails may be used in the assembly of wooden sign supports, but 3/8" bolts with nuts or 3/8" x 3 1/2" lag screws must be used on every joint for final connection.
2. No more than 2 sign posts shall be placed within a 7 ft. circle, except for specific materials noted on the CWZTCD List.
3. When project is completed, all sign supports and foundations shall be removed from the project site. This will be considered subsidiary to Item 502.

* See BC(4) for definition of "Work Duration."

** Wood sign posts MUST be one piece. Splicing will NOT be allowed. Posts shall be painted white.

☐ See the CWZTCD for the type of sign substrate that can be used for each approved sign support.

Texas Department of Transportation | Traffic Safety Division Standard

BARRICADE AND CONSTRUCTION TYPICAL SIGN SUPPORT

BC(5)-21

FILE: bc-21.dgn	DN: TxDOT	CK: TxDOT	DW: TxDOT	CK: TxDOT
©TxDOT November 2002	CONT	SECT	JOB	HIGHWAY
REVISIONS				
9-07 8-14	DIST	COUNTY		SHEET NO.
7-13 5-21		WILLIAMSON		13

99

DISCLAIMER:
The use of this standard is governed by the "Texas Engineering Practice Act". No warranty of any kind is made by TxDOT for any purpose whatsoever. TxDOT assumes no responsibility for the conversion of this standard to other formats or for incorrect results or damages resulting from its use.

DATE: 1/9/2025 $TIME$
FILE: pw:\\jmt-pw.bentley.com:jmt-pw-01\Documents\Projects\2022\22-01219-001\Design\V4 - Design\Plan Set\2. TCP\Standards\bc-21.dgn

WHEN NOT IN USE, REMOVE THE PCMS FROM THE RIGHT-OF-WAY OR PLACE THE PCMS BEHIND BARRIER OR GUARDRAIL WITH SIGN PANEL TURNED PARALLEL TO TRAFFIC

PORTABLE CHANGEABLE MESSAGE SIGNS

1. The Engineer/Inspector shall approve all messages used on portable changeable message signs (PCMS).
2. Messages on PCMS should contain no more than 8 words (about four to eight characters per word), not including simple words such as "TO," "FOR," "AT," etc.
3. Messages should consist of a single phase, or two phases that alternate. Three-phase messages are not allowed. Each phase of the message should convey a single thought, and must be understood by itself.
4. Use the word "EXIT" to refer to an exit ramp on a freeway; i.e., "EXIT CLOSED." Do not use the term "RAMP."
5. Always use the route or interstate designation (IH, US, SH, FM) along with the number when referring to a roadway.
6. When in use, the bottom of a stationary PCMS message panel should be a minimum 7 feet above the roadway, where possible.
7. The message term "WEEKEND" should be used only if the work is to start on Saturday morning and end by Sunday evening at midnight. Actual days and hours of work should be displayed on the PCMS if work is to begin on Friday evening and/or continue into Monday morning.
8. The Engineer/Inspector may select one of two options which are available for displaying a two-phase message on a PCMS. Each phase may be displayed for either four seconds each or for three seconds each.
9. Do not "flash" messages or words included in a message. The message should be steady burn or continuous while displayed.
10. Do not present redundant information on a two-phase message; i.e., keeping two lines of the message the same and changing the third line.
11. Do not use the word "Danger" in message.
12. Do not display the message "LANES SHIFT LEFT" or "LANES SHIFT RIGHT" on a PCMS. Drivers do not understand the message.
13. Do not display messages that scroll horizontally or vertically across the face of the sign.
14. The following table lists abbreviated words and two-word phrases that are acceptable for use on a PCMS. Both words in a phrase must be displayed together. Words or phrases not on this list should not be abbreviated, unless shown in the TMUTCD.
15. PCMS character height should be at least 18 inches for trailer mounted units. They should be visible from at least 1/2 (.5) mile and the text should be legible from at least 600 feet at night and 800 feet in daylight. Truck mounted units must have a character height of 10 inches and must be legible from at least 400 feet.
16. Each line of text should be centered on the message board rather than left or right justified.
17. If disabled, the PCMS should default to an illegible display that will not alarm motorists and will only be used to alert workers that the PCMS has malfunctioned. A pattern such as a series of horizontal solid bars is appropriate.

WORD OR PHRASE	ABBREVIATION
Access Road	ACCS RD
Alternate	ALT
Avenue	AVE
Best Route	BEST RTE
Boulevard	BLVD
Bridge	BRDG
Cannot	CANT
Center	CTR
Construction Ahead	CONST AHD
CROSSING	XING
Detour Route	DETOUR RTE
Do Not	DONT
East	E
Eastbound	(route) E
Emergency	EMER
Emergency Vehicle	EMER VEH
Entrance, Enter	ENT
Express Lane	EXP LN
Expressway	EXPWY
XXXX Feet	XXXX FT
Fog Ahead	FOG AHD
Freeway	FRWY, FWY
Freeway Blocked	FWY BLKD
Friday	FRI
Hazardous Driving	HAZ DRIVING
Hazardous Material	HAZMAT
High-Occupancy	HOV
Vehicle Highway	HWY
Hour(s)	HR, HRS
Information	INFO
It Is	ITS
Junction	JCT
Left	LFT
Left Lane	LFT LN
Lane Closed	LN CLOSED
Lower Level	LWR LEVEL
Maintenance	MAINT

WORD OR PHRASE	ABBREVIATION
Major	MAJ
Miles	MI
Miles Per Hour	MPH
Minor	MNR
Monday	MON
Normal	NORM
North	N
Northbound	(route) N
Parking	PKING
Road	RD
Right Lane	RT LN
Saturday	SAT
Service Road	SERV RD
Shoulder	SHLDR
Slippery	SLIP
South	S
Southbound	(route) S
Speed	SPD
Street	ST
Sunday	SUN
Telephone	PHONE
Temporary	TEMP
Thursday	THURS
To Downtown	TO DWNTN
Traffic	TRAF
Travelers	TRVLRS
Tuesday	TUES
Time Minutes	TIME MIN
Upper Level	UPR LEVEL
Vehicles (s)	VEH, VEHS
Warning	WARN
Wednesday	WED
Weight Limit	WT LIMIT
West	W
Westbound	(route) W
Wet Pavement	WET PVMT
Will Not	WONT

Roadway designation # IH-number, US-number, SH-number, FM-number

RECOMMENDED PHASES AND FORMATS FOR PCMS MESSAGES DURING ROADWORK ACTIVITIES

(The Engineer may approve other messages not specifically covered here.)

Phase 1: Condition Lists

Road/Lane/Ramp Closure List

- FREEWAY CLOSED X MILE
- FRONTAGE ROAD CLOSED
- ROAD CLOSED AT SH XXX
- SHOULDER CLOSED XXX FT
- ROAD CLSD AT FM XXXX
- RIGHT LN CLOSED XXX FT
- RIGHT X LANES CLOSED
- RIGHT X LANES OPEN
- CENTER LANE CLOSED
- DAYTIME LANE CLOSURES
- NIGHT LANE CLOSURES
- I-XX SOUTH EXIT CLOSED
- VARIOUS LANES CLOSED
- EXIT XXX CLOSED X MILE
- EXIT CLOSED
- RIGHT LN TO BE CLOSED
- MALL DRIVEWAY CLOSED
- X LANES CLOSED TUE - FRI
- XXXXXXXX BLVD CLOSED

Other Condition List

- ROADWORK XXX FT
- ROAD REPAIRS XXXX FT
- FLAGGER XXXX FT
- LANE NARROWS XXXX FT
- RIGHT LN NARROWS XXXX FT
- TWO-WAY TRAFFIC XX MILE
- MERGING TRAFFIC XXXX FT
- CONST TRAFFIC XXX FT
- LOOSE GRAVEL XXXX FT
- UNEVEN LANES XXXX FT
- DETOUR X MILE
- ROUGH ROAD XXXX FT
- ROADWORK PAST SH XXXX
- ROADWORK NEXT FRI-SUN
- BUMP XXXX FT
- US XXX EXIT X MILES
- TRAFFIC SIGNAL XXXX FT
- LANES SHIFT *

* LANES SHIFT in Phase 1 must be used with STAY IN LANE in Phase 2.

Phase 2: Possible Component Lists

Action to Take/Effect on Travel List

- MERGE RIGHT
- FORM X LINES RIGHT
- DETOUR NEXT X EXITS
- USE XXXXX RD EXIT
- USE EXIT XXX
- USE EXIT I-XX NORTH
- STAY ON US XXX SOUTH
- USE I-XX E TO I-XX N
- TRUCKS USE US XXX N
- WATCH FOR TRUCKS
- WATCH FOR TRUCKS
- EXPECT DELAYS
- EXPECT DELAYS
- PREPARE TO STOP
- REDUCE SPEED XXX FT
- END SHOULDER USE
- USE OTHER ROUTES
- WATCH FOR WORKERS
- STAY IN LANE *

Location List

- AT FM XXXX
- BEFORE RAILROAD CROSSING
- NEXT X MILES
- PAST US XXX EXIT
- XXXXXXX TO XXXXXXX
- US XXX TO FM XXXX

Warning List

- SPEED LIMIT XX MPH
- MAXIMUM SPEED XX MPH
- MINIMUM SPEED XX MPH
- ADVISORY SPEED XX MPH
- RIGHT LANE EXIT
- USE CAUTION
- DRIVE SAFELY
- DRIVE WITH CARE

** Advance Notice List

- TUE-FRI XX AM- X PM
- APR XX-XX X PM-X AM
- BEGINS MONDAY
- BEGINS MAY XX
- MAY X-X XX PM - XX AM
- NEXT FRI-SUN
- XX AM TO XX PM
- NEXT TUE AUG XX
- TONIGHT XX PM- XX AM

* LANES SHIFT in Phase 1 must be used with STAY IN LANE in Phase 2.

** See Application Guidelines Note 6.

APPLICATION GUIDELINES

1. Only 1 or 2 phases are to be used on a PCMS.
2. The 1st phase (or both) should be selected from the "Road/Lane/Ramp Closure List" and the "Other Condition List".
3. A 2nd phase can be selected from the "Action to Take/Effect on Travel, Location, General Warning, or Advance Notice Phase Lists".
4. A Location Phase is necessary only if a distance or location is not included in the first phase selected.
5. If two PCMS are used in sequence, they must be separated by a minimum of 1000 ft. Each PCMS shall be limited to two phases, and should be understandable by themselves.
6. For advance notice, when the current date is within seven days of the actual work date, calendar days should be replaced with days of the week. Advance notification should typically be for no more than one week prior to the work.

WORDING ALTERNATIVES

1. The words RIGHT, LEFT and ALL can be interchanged as appropriate.
2. Roadway designations IH, US, SH, FM and LP can be interchanged as appropriate.
3. EAST, WEST, NORTH and SOUTH (or abbreviations E, W, N and S) can be interchanged as appropriate.
4. Highway names and numbers replaced as appropriate.
5. ROAD, HIGHWAY and FREEWAY can be interchanged as needed.
6. AHEAD may be used instead of distances if necessary.
7. FT and MI, MILE and MILES interchanged as appropriate.
8. AT, BEFORE and PAST interchanged as needed.
9. Distances or AHEAD can be eliminated from the message if a location phase is used.

PCMS SIGNS WITHIN THE R.O.W. SHALL BE BEHIND GUARDRAIL OR CONCRETE BARRIER OR SHALL HAVE A MINIMUM OF FOUR (4) PLASTIC DRUMS PLACED PERPENDICULAR TO TRAFFIC ON THE UPSTREAM SIDE OF THE PCMS, WHEN EXPOSED TO ONE DIRECTION OF TRAFFIC. WHEN EXPOSED TO TWO WAY TRAFFIC, THE FOUR DRUMS SHOULD BE PLACED WITH ONE DRUM AT EACH OF THE FOUR CORNERS OF THE UNIT.

FULL MATRIX PCMS SIGNS

1. When Full Matrix PCMS signs are used, the character height and legibility/visibility requirements shall be maintained as listed in Note 15 under "PORTABLE CHANGEABLE MESSAGE SIGNS" above.
2. When symbol signs, such as the "Flagger Symbol"(CW20-7) are represented graphically on the Full Matrix PCMS sign and, with the approval of the Engineer, it shall maintain the legibility/visibility requirement listed above.
3. When symbol signs are represented graphically on the Full Matrix PCMS, they shall only supplement the use of the static sign represented, and shall not substitute for, or replace that sign.
4. A full matrix PCMS may be used to simulate a flashing arrow board provided it meets the visibility, flash rate and dimming requirements on BC(7), for the same size arrow.

Texas Department of Transportation

Traffic Safety Division Standard

BARRICADE AND CONSTRUCTION PORTABLE CHANGEABLE MESSAGE SIGN (PCMS)

BC(6)-21

FILE: bc-21.dgn	DN: TxDOT	CK: TxDOT	DW: TxDOT	CK: TxDOT
©TxDOT November 2002	CONT	SECT	JOB	HIGHWAY
REVISIONS				
9-07 8-14	DIST	COUNTY		SHEET NO.
7-13 5-21		WILLIAMSON		14

100

DISCLAIMER:
The use of this standard is governed by the "Texas Engineering Practice Act". No warranty of any kind is made by TxDOT for any purpose whatsoever. TxDOT assumes no responsibility for the conversion of this standard to other formats or for incorrect results or damages resulting from its use.

DATE: 1/9/2025 $TIME$
FILE: pw:\\jmf-pw.bentley.com:jmf-pw-01\Documents\Projects\2022\22-01219-001\Design\4 - Design\Plan Set\2. TCP\Standards\bc-21.dgn

1. Barrier Reflectors shall be pre-qualified, and conform to the color and reflectivity requirements of DMS-8600. A list of prequalified Barrier Reflectors can be found at the Material Producer List web address shown on BC(1).
2. Color of Barrier Reflectors shall be as specified in the TMUTCD. The cost of the reflectors shall be considered subsidiary to Item 512.

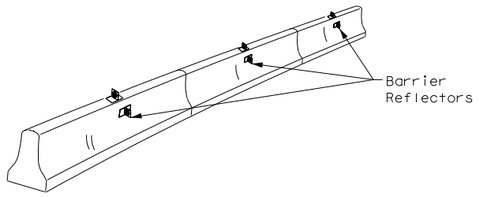

CONCRETE TRAFFIC BARRIER (CTB)

3. Where traffic is on one side of the CTB, two (2) Barrier Reflectors shall be mounted in approximately the midsection of each section of CTB. An alternate mounting location is uniformly spaced at one end of each CTB. This will allow for attachment of a barrier grapple without damaging the reflector. The Barrier Reflector mounted on the side of the CTB shall be located directly below the reflector mounted on top of the barrier, as shown in the detail above.
4. Where CTB separates two-way traffic, three barrier reflectors shall be mounted on each section of CTB. The reflector unit on top shall have two yellow reflective faces (Bi-Directional)while the reflectors on each side of the barrier shall have one yellow reflective face, as shown in the detail above.
5. When CTB separates traffic traveling in the same direction, no barrier reflectors will be required on top of the CTB.
6. Barrier Reflector units shall be yellow or white in color to match the edgeline being supplemented.
7. Maximum spacing of Barrier Reflectors is forty (40) feet.
8. Pavement markers or temporary flexible-reflective roadway marker tabs shall NOT be used as CTB delineation.
9. Attachment of Barrier Reflectors to CTB shall be per manufacturer's recommendations.
10. Missing or damaged Barrier Reflectors shall be replaced as directed by the Engineer.
11. Single slope barriers shall be delineated as shown on the above detail.

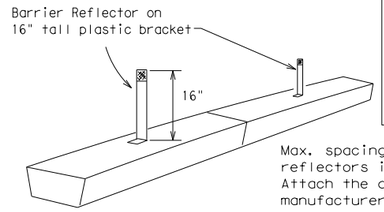

Max. spacing of barrier reflectors is 20 feet. Attach the delineators as per manufacturer's recommendations.

LOW PROFILE CONCRETE BARRIER (LPCB)

LOW PROFILE CONCRETE BARRIER (LPCB) USED IN WORK ZONES

LPCB is approved for use in work zone locations, where the posted speed is 45mph, or less. See Roadway Standard Sheet LPCB.

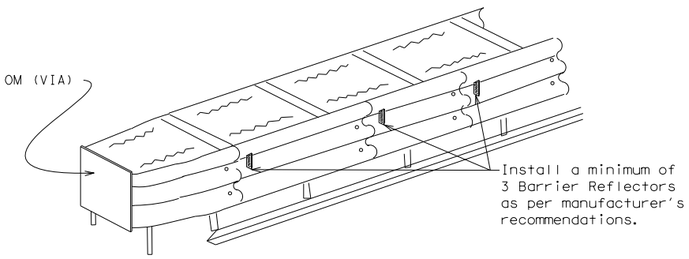

DELINEATION OF END TREATMENTS

END TREATMENTS FOR CTB'S USED IN WORK ZONES

End treatments used on CTB's in work zones shall meet the apppropriate crashworthy standards as defined in the Manual for Assessing Safety Hardware (MASH). Refer to the CWZTCD List for approved end treatments and manufacturers.

BARRIER REFLECTORS FOR CONCRETE TRAFFIC BARRIER AND ATTENUATORS

WARNING LIGHTS

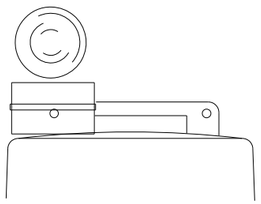

Type C Warning Light or approved substitute mounted on a drum adjacent to the travel way.

1. Warning lights shall meet the requirements of the TMUTCD.
2. Warning lights shall NOT be installed on barricades.
3. Type A-Low Intensity Flashing Warning Lights are commonly used with drums. They are intended to warn of or mark a potentially hazardous area. Their use shall be as indicated on this sheet and/or other sheets of the plans by the designation "FL". The Type A Warning Lights shall not be used with signs manufactured with Type B_{FL} or C_{FL} Sheeting meeting the requirements of Departmental Material Specification DMS-8300.
4. Type-C and Type D 360 degree Steady Burn Lights are intended to be used in a series for delineation to supplement other traffic control devices. Their use shall be as indicated on this sheet and/or other sheets of the plans by the designation "SB".
5. The Engineer/Inspector or the plans shall specify the location and type of warning lights to be installed on the traffic control devices.
6. When required by the Engineer, the Contractor shall furnish a copy of the warning lights certification. The warning light manufacturer will certify the warning lights meet the requirements of the latest ITE Purchase Specifications for Flashing and Steady-Burn Warning Lights.
7. When used to delineate curves, Type-C and Type D Steady Burn Lights should only be placed on the outside of the curve, not the inside.
8. The location of warning lights and warning reflectors on drums shall be as shown elsewhere in the plans.

WARNING LIGHTS MOUNTED ON PLASTIC DRUMS

1. Type A flashing warning lights are intended to warn drivers that they are approaching or are in a potentially hazardous area.
2. Type A random flashing warning lights are not intended for delineation and shall not be used in a series.
3. A series of sequential flashing warning lights placed on channelizing devices to form a merging taper may be used for delineation. If used, the successive flashing of the sequential warning lights should occur from the beginning of the taper to the end of the merging taper in order to identify the desired vehicle path. The rate of flashing for each light shall be 65 flashes per minute, plus or minus 10 flashes.
4. Type C and D steady-burn warning lights are intended to be used in a series to delineate the edge of the travel lane on detours, on lane changes, on lane closures, and on other similar conditions.
5. Type A, Type C and Type D warning lights shall be installed at locations as detailed on other sheets in the plans.
6. Warning lights shall not be installed on a drum that has a sign, chevron or vertical panel.
7. The maximum spacing for warning lights on drums should be identical to the channelizing device spacing.

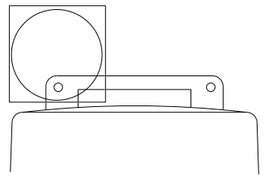

Warning reflector may be round or square.Must have a yellow reflective surface area of at least 30 square inches

WARNING REFLECTORS MOUNTED ON PLASTIC DRUMS AS A SUBSTITUTE FOR TYPE C (STEADY BURN) WARNING LIGHTS

1. A warning reflector or approved substitute may be mounted on a plastic drum as a substitute for a Type C, steady burn warning light at the discretion of the Contractor unless otherwise noted in the plans.
2. The warning reflector shall be yellow in color and shall be manufactured using a sign substrate approved for use with plastic drums listed on the CWZTCD.
3. The warning reflector shall have a minimum retroreflective surface area (one-side) of 30 square inches.
4. Round reflectors shall be fully reflectorized, including the area where attached to the drum.
5. Square substrates must have a minimum of 30 square inches of reflectorized sheeting. They do not have to be reflectorized where it attaches to the drum.
6. The side of the warning reflector facing approaching traffic shall have sheeting meeting the color and retroreflectivity requirements for DMS 8300-Type B or Type C.
7. When used near two-way traffic, both sides of the warning reflector shall be reflectorized.
8. The warning reflector should be mounted on the side of the handle nearest approaching traffic.
9. The maximum spacing for warning reflectors should be identical to the channelizing device spacing requirements.

Arrow Boards may be located behind channelizing devices in place for a shoulder taper or merging taper, otherwise they shall be delineated with four (4) channelizing devices placed perpendicular to traffic on the upstream side of traffic.

1. The Flashing Arrow Board should be used for all lane closures on multi-lane roadways, or slow moving maintenance or construction activities on the travel lanes.
2. Flashing Arrow Boards should not be used on two-lane, two-way roadways, detours, diversions or work on shoulders unless the "CAUTION" display (see detail below) is used.
3. The Engineer/Inspector shall choose all appropriate signs, barricades and/or other traffic control devices that should be used in conjunction with the Flashing Arrow Board.
4. The Flashing Arrow Board should be able to display the following symbols:

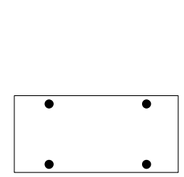

4 CORNER CAUTION

OR

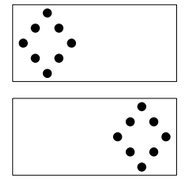

ALTERNATING DIAMOND CAUTION

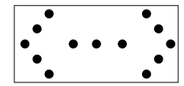

DOUBLE ARROW

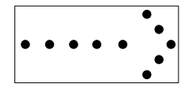

RIGHT/LEFT ARROW
(right arrow shown; left is similar)

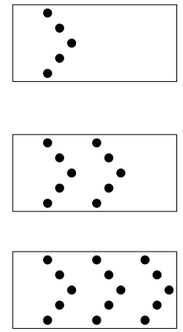

RIGHT/LEFT SEQUENTIAL CHEVRON
(right chevron shown; left is similar)

5. The "CAUTION" display consists of four corner lamps flashing simultaneously, or the Alternating Diamond Caution mode as shown.
6. The straight line caution display is NOT ALLOWED.
7. The Flashing Arrow Board shall be capable of minimum 50 percent dimming from rated lamp voltage. The flashing rate of the lamps shall not be less than 25 nor more than 40 flashes per minute.
8. Minimum lamp "on time" shall be approximately 50 percent for the flashing arrow and equal intervals of 25 percent for each sequential phase of the flashing chevron.
9. The sequential arrow display is NOT ALLOWED.
10. The flashing arrow display is the TxDOT standard; however, the sequential chevron display may be used during daylight operations.
11. The Flashing Arrow Board shall be mounted on a vehicle, trailer or other suitable support.
12. A Flashing Arrow Board SHALL NOT BE USED to laterally shift traffic.
13. A full matrix PCMS may be used to simulate a Flashing Arrow Board provided it meets visibility, flash rate and dimming requirements on this sheet for the same size arrow.
14. Minimum mounting height of trailer mounted Arrow Boards should be 7 feet from roadway to bottom of panel.

REQUIREMENTS			
TYPE	MINIMUM SIZE	MINIMUM NUMBER OF PANEL LAMPS	MINIMUM VISIBILITY DISTANCE
B	30 x 60	13	3/4 mile
C	48 x 96	15	1 mile

ATTENTION
Flashing Arrow Boards shall be equipped with automatic dimming devices.

WHEN NOT IN USE, REMOVE THE ARROW BOARD FROM THE RIGHT-OF-WAY OR PLACE THE ARROW BOARD BEHIND CONCRETE TRAFFIC BARRIER OR GUARDRAIL.

FLASHING ARROW BOARDS

TRUCK-MOUNTED ATTENUATORS

1. Truck-mounted attenuators (TMA) used on TxDOT facilities must meet the requirements outlined in the Manual for Assessing Safety Hardware (MASH).
2. Refer to the CWZTCD for the requirements of Level 2 or Level 3 TMAs.
3. Refer to the CWZTCD for a list of approved TMAs.
4. TMAs are required on freeways unless otherwise noted in the plans.
5. A TMA should be used anytime that it can be positioned 30 to 100 feet in advance of the area of crew exposure without adversely affecting the work performance.
6. The only reason a TMA should not be required is when a work area is spread down the roadway and the work crew is an extended distance from the TMA.

Texas Department of Transportation — Traffic Safety Division Standard

BARRICADE AND CONSTRUCTION ARROW PANEL, REFLECTORS, WARNING LIGHTS & ATTENUATOR

BC(7)-21

FILE: bc-21.dgn	DN: TxDOT	CK: TxDOT	DW: TxDOT	CK: TxDOT
©TxDOT November 2002	CONT	SECT	JOB	HIGHWAY
REVISIONS				
9-07 8-14	DIST	COUNTY		SHEET NO.
7-13 5-21		WILLIAMSON		15

101

DISCLAIMER:
The use of this standard is governed by the "Texas Engineering Practice Act". No warranty of any kind is made by TxDOT for any purpose whatsoever. TxDOT assumes no responsibility for the conversion of this standard to other formats or for incorrect results or damages resulting from its use.

DATE: 1/9/2025 $TIME$
FILE: pw:\\jmt-pw.bentley.com:jmt-pw-01\Documents\Projects\2022\22-01219-001\Design\4 - Design\Plan Set\2. TCP\Standards\bc-21.dgn

GENERAL NOTES

1. For long term stationary work zones on freeways, drums shall be used as the primary channelizing device.
2. For intermediate term stationary work zones on freeways, drums should be used as the primary channelizing device but may be replaced in tangent sections by vertical panels, or 42" two-piece cones. In tangent sections, one-piece cones may be used with the approval of the Engineer but only if personnel are present on the project at all times to maintain the cones in proper position and location.
3. For short term stationary work zones on freeways, drums are the preferred channelizing device but may be replaced in tapers, transitions and tangent sections by vertical panels, two-piece cones or one-piece cones as approved by the Engineer.
4. Drums and all related items shall comply with the requirements of the current version of the "Texas Manual on Uniform Traffic Control Devices" (TMUTCD) and the "Compliant Work Zone Traffic Control Devices List" (CWZTCD).
5. Drums, bases, and related materials shall exhibit good workmanship and shall be free from objectionable marks or defects that would adversely affect their appearance or serviceability.
6. The Contractor shall have a maximum of 24 hours to replace any plastic drums identified for replacement by the Engineer/Inspector. The replacement device must be an approved device.

GENERAL DESIGN REQUIREMENTS

Pre-qualified plastic drums shall meet the following requirements:

1. Plastic drums shall be a two-piece design; the "body" of the drum shall be the top portion and the "base" shall be the bottom.
2. The body and base shall lock together in such a manner that the body separates from the base when impacted by a vehicle traveling at a speed of 20 MPH or greater but prevents accidental separation due to normal handling and/or air turbulence created by passing vehicles.
3. Plastic drums shall be constructed of lightweight flexible, and deformable materials. The Contractor shall NOT use metal drums or single piece plastic drums as channelization devices or sign supports.
4. Drums shall present a profile that is a minimum of 18 inches in width at the 36 inch height when viewed from any direction. The height of drum unit (body installed on base) shall be a minimum of 36 inches and a maximum of 42 inches.
5. The top of the drum shall have a built-in handle for easy pickup and shall be designed to drain water and not collect debris. The handle shall have a minimum of two widely spaced 9/16 inch diameter holes to allow attachment of a warning light, warning reflector unit or approved compliant sign.
6. The exterior of the drum body shall have a minimum of four alternating orange and white retroreflective circumferential stripes not less than 4 inches nor greater than 8 inches in width. Any non-reflectorized space between any two adjacent stripes shall not exceed 2 inches in width.
7. Bases shall have a maximum width of 36 inches, a maximum height of 4 inches, and a minimum of two footholds of sufficient size to allow base to be held down while separating the drum body from the base.
8. Plastic drums shall be constructed of ultra-violet stabilized, orange, high-density polyethylene (HDPE) or other approved material.
9. Drum body shall have a maximum unballasted weight of 11 lbs.
10. Drum and base shall be marked with manufacturer's name and model number.

RETROREFLECTIVE SHEETING

1. The stripes used on drums shall be constructed of sheeting meeting the color and retroreflectivity requirements of Departmental Materials Specification DMS-8300, "Sign Face Materials." Type A or Type B reflective sheeting shall be supplied unless otherwise specified in the plans.
2. The sheeting shall be suitable for use on and shall adhere to the drum surface such that, upon vehicular impact, the sheeting shall remain adhered in-place and exhibit no delaminating, cracking, or loss of retroreflectivity other than that loss due to abrasion of the sheeting surface.

BALLAST

1. Unballasted bases shall be large enough to hold up to 50 lbs. of sand. This base, when filled with the ballast material, should weigh between 35 lbs (minimum) and 50 lbs (maximum). The ballast may be sand in one to three sandbags separate from the base, sand in a sand-filled plastic base, or other ballasting devices as approved by the Engineer. Stacking of sandbags will be allowed, however height of sandbags above pavement surface may not exceed 12 inches.
2. Bases with built-in ballast shall weigh between 40 lbs. and 50 lbs. Built-in ballast can be constructed of an integral crumb rubber base or a solid rubber base.
3. Recycled truck tire sidewalls may be used for ballast on drums approved for this type of ballast on the CWZTCD list.
4. The ballast shall not be heavy objects, water, or any material that would become hazardous to motorists, pedestrians, or workers when the drum is struck by a vehicle.
5. When used in regions susceptible to freezing, drums shall have drainage holes in the bottoms so that water will not collect and freeze becoming a hazard when struck by a vehicle.
6. Ballast shall not be placed on top of drums.
7. Adhesives may be used to secure base of drums to pavement.

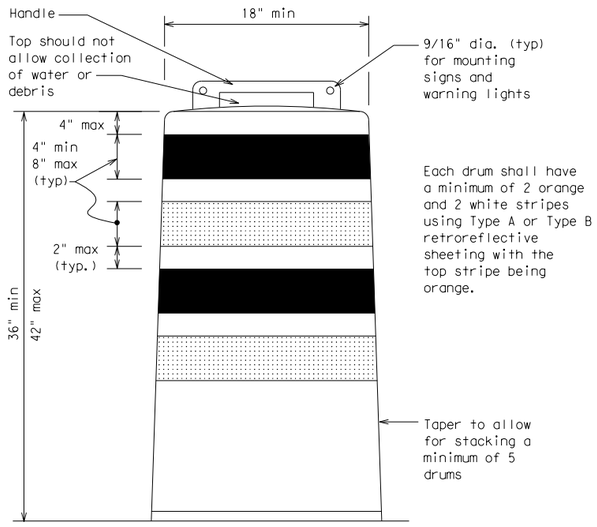

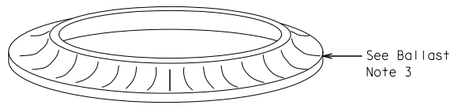

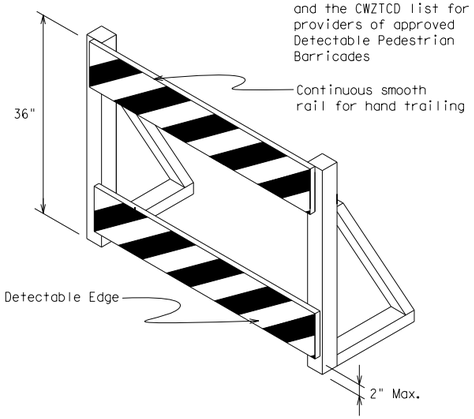

DETECTABLE PEDESTRIAN BARRICADES

1. When existing pedestrian facilities are disrupted, closed, or relocated in a TTC zone, the temporary facilities shall be detectable and include accessibility features consistent with the features present in the existing pedestrian facility. Refer to WZ(BTS-2) for Pedestrian Control requirements for Sidewalk Diversions, Sidewalk Detours and Crosswalk Closures.
2. Where pedestrians with visual disabilities normally use the closed sidewalk, a Detectable Pedestrian Barricade shall be placed across the full width of the closed sidewalk instead of a Type 3 Barricade.
3. Detectable pedestrian barricades similar to the one pictured above, longitudinal channelizing devices, some concrete barriers, and wood or chain link fencing with a continuous detectable edging can satisfactorily delineate a pedestrian path.
4. Tape, rope, or plastic chain strung between devices are not detectable, do not comply with the design standards in the "Americans with Disabilities Act Accessibility Guidelines (ADAAG)" and should not be used as a control for pedestrian movements.
5. Warning lights shall not be attached to detectable pedestrian barricades.
6. Detectable pedestrian barricades should use 8" nominal barricade rails as shown on BC(10) provided that the top rail provides a smooth continuous rail suitable for hand trailing with no splinters, burrs, or sharp edges.

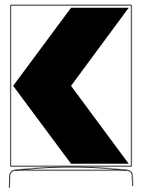

18" x 24" Sign
(Maximum Sign Dimension)
Chevron CW1-8, Opposing Traffic Lane Divider, Driveway sign D70a, Keep Right R4 series or other signs as approved by Engineer

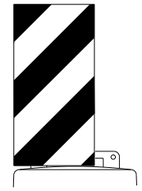

12" x 24"
Vertical Panel
mount with diagonals sloping down towards travel way

Plywood, Aluminum or Metal sign substrates shall NOT be used on plastic drums

SIGNS, CHEVRONS, AND VERTICAL PANELS MOUNTED ON PLASTIC DRUMS

1. Signs used on plastic drums shall be manufactured using substrates listed on the CWZTCD.
2. Chevrons and other work zone signs with an orange background shall be manufactured with Type B_{FL} or Type C_{FL} Orange sheeting meeting the color and retroreflectivity requirements of DMS-8300, "Sign Face Material," unless otherwise specified in the plans.
3. Vertical Panels shall be manufactured with orange and white sheeting meeting the requirements of DMS-8300 Type A or Type B. Diagonal stripes on Vertical Panels shall slope down toward the intended traveled lane.
4. Other sign messages (text or symbolic) may be used as approved by the Engineer. Sign dimensions shall not exceed 18 inches in width or 24 inches in height, except for the R9 series signs discussed in note 8 below.
5. Signs shall be installed using a 1/2 inch bolt (nominal) and nut, two washers, and one locking washer for each connection.
6. Mounting bolts and nuts shall be fully engaged and adequately torqued. Bolts should not extend more than 1/2 inch beyond nuts.
7. Chevrons may be placed on drums on the outside of curves, on merging tapers or on shifting tapers. When used in these locations, they may be placed on every drum or spaced not more than on every third drum. A minimum of three (3) should be used at each location called for in the plans.
8. R9-9, R9-10, R9-11 and R9-11a Sidewalk Closed signs which are 24 inches wide may be mounted on plastic drums, with approval of the Engineer.

Texas Department of Transportation | Traffic Safety Division Standard

BARRICADE AND CONSTRUCTION CHANNELIZING DEVICES

BC(8)-21

FILE: bc-21.dgn	DN: TxDOT	CK: TxDOT	DW: TxDOT	CK: TxDOT
©TxDOT November 2002	CONT	SECT	JOB	HIGHWAY
REVISIONS				
4-03 **8-14**	DIST	COUNTY		SHEET NO.
9-07 5-21		WILLIAMSON		16
7-13				
102				

DISCLAIMER:
The use of this standard is governed by the "Texas Engineering Practice Act". No warranty of any kind is made by TxDOT for any purpose whatsoever. TxDOT assumes no responsibility for the conversion of this standard to other formats or for incorrect results or damages resulting from its use.

DATE: 1/9/2025 $TIME$
FILE: pw:\\jmt-pw.bentley.com:jmt-pw-01\Documents\Projects\2022\22-01219-001\Design\04 - Design\Plan Set\2. TCP\Standards\bc-21.dgn

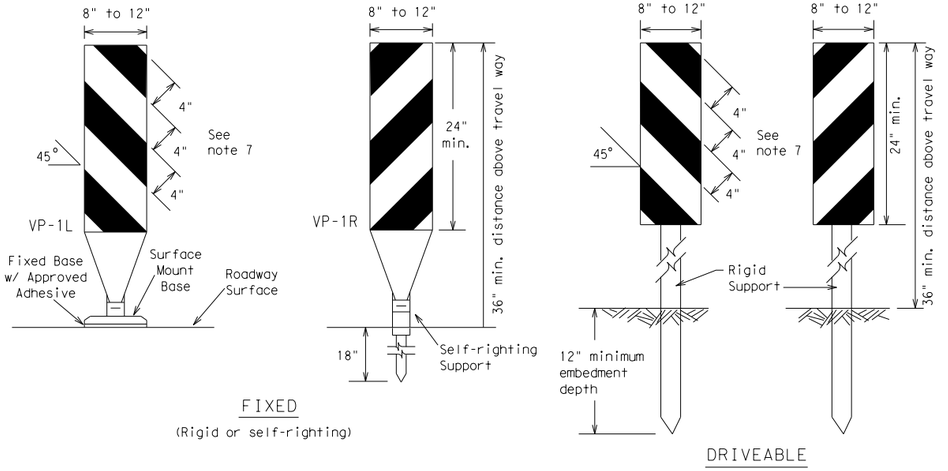

FIXED

(Rigid or self-righting)

DRIVEABLE

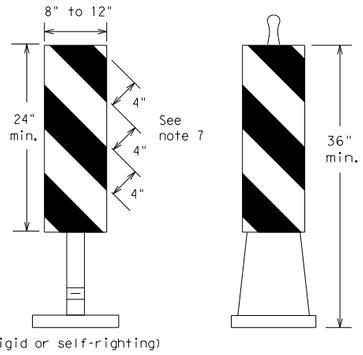

(Rigid or self-righting)

PORTABLE

1. Vertical Panels (VP's) are normally used to channelize traffic or divide opposing lanes of traffic.
2. VP's may be used in daytime or nighttime situations. They may be used at the edge of shoulder drop-offs and other areas such as lane transitions where positive daytime and nighttime delineation is required. The Engineer/Inspector shall refer to the Roadway Design Manual for additional requirements on the use VP's for drop-offs.
3. VP's should be mounted back to back if used at the edge of cuts adjacent to two-way two lane roadways. Stripes are to be reflective orange and reflective white and should always slope downward toward the travel lane.
4. VP's used on expressways and freeways or other high speed roadways, may have more than 270 square inches of retroreflective area facing traffic.
5. Self-righting supports are available with portable base. See "Compliant Work Zone Traffic Control Devices List" (CWZTCD).
6. Sheeting for the VP's shall be retroreflective Type A or Type B conforming to Departmental Material Specification DMS-8300, unless noted otherwise.
7. Where the height of reflective material on the vertical panel is 36 inches or greater, a panel stripe of 6 inches shall be used.

VERTICAL PANELS (VPs)

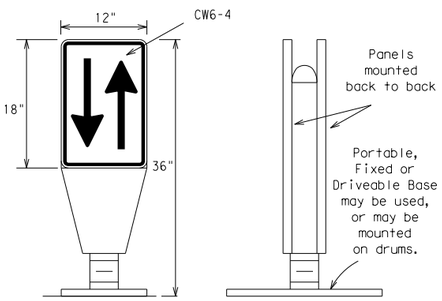

1. Opposing Traffic Lane Dividers (OTLD) are delineation devices designed to convert a normal one-way roadway section to two-way operation. OTLD's are used on temporary centerlines. The upward and downward arrows on the sign's face indicate the direction of traffic on either side of the divider. The base is secured to the pavement with an adhesive or rubber weight to minimize movement caused by a vehicle impact or wind gust.
2. The OTLD may be used in combination with 42" cones or VPs.
3. Spacing between the OTLD shall not exceed 500 feet. 42" cones or VPs placed between the OTLD's should not exceed 100 foot spacing.
4. The OTLD shall be orange with a black non-reflective legend. Sheeting for the OTLD shall be retroreflective Type B_{FL} or Type C_{FL} conforming to Departmental Material Specification DMS-8300, unless noted otherwise. The legend shall meet the requirements of DMS-8300.

OPPOSING TRAFFIC LANE DIVIDERS (OTLD)

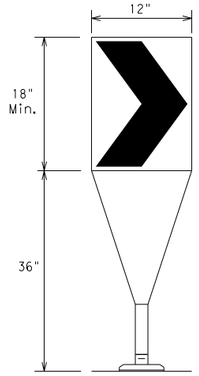

Fixed Base w/ Approved Adhesive (Driveable Base, or Flexible Support can be used)

1. The chevron shall be a vertical rectangle with a minimum size of 12 by 18 inches.
2. Chevrons are intended to give notice of a sharp change of alignment with the direction of travel and provide additional emphasis and guidance for vehicle operators with regard to changes in horizontal alignment of the roadway.
3. Chevrons, when used, shall be erected on the outside of a sharp curve or turn, or on the far side of an intersection. They shall be in line with and at right angles to approaching traffic. Spacing should be such that the motorist always has three in view, until the change in alignment eliminates its need.
4. To be effective, the chevron should be visible for at least 500 feet.
5. Chevrons shall be orange with a black nonreflective legend. Sheeting for the chevron shall be retroreflective Type B_{FL} or Type C_{FL} conforming to Departmental Material Specification DMS-8300, unless noted otherwise. The legend shall meet the requirements of DMS-8300.
6. For Long Term Stationary use on tapers or transitions on freeways and divided highways, self-righting chevrons may be used to supplement plastic drums but not to replace plastic drums.

CHEVRONS

GENERAL NOTES

1. Work Zone channelizing devices illustrated on this sheet may be installed in close proximity to traffic and are suitable for use on high or low speed roadways. The Engineer/Inspector shall ensure that spacing and placement is uniform and in accordance with the "Texas Manual on Uniform Traffic Control Devices" (TMUTCD).
2. Channelizing devices shown on this sheet may have a driveable, fixed or portable base. The requirement for self-righting channelizing devices must be specified in the General Notes or other plan sheets.
3. Channelizing devices on self-righting supports should be used in work zone areas where channelizing devices are frequently impacted by errant vehicles or vehicle related wind gusts making alignment of the channelizing devices difficult to maintain. Locations of these devices shall be detailed elsewhere in the plans. These devices shall conform to the TMUTCD and the "Compliant Work Zone Traffic Control Devices List" (CWZTCD).
4. The Contractor shall maintain devices in a clean condition and replace damaged, nonreflective, faded, or broken devices and bases as required by the Engineer/Inspector. The Contractor shall be required to maintain proper device spacing and alignment.
5. Portable bases shall be fabricated from virgin and/or recycled rubber. The portable bases shall weigh a minimum of 30 lbs.
6. Pavement surfaces shall be prepared in a manner that ensures proper bonding between the adhesives, the fixed mount bases and the pavement surface. Adhesives shall be prepared and applied according to the manufacturer's recommendations.
7. The installation and removal of channelizing devices shall not cause detrimental effects to the final pavement surfaces, including pavement surface discoloration or surface integrity. Driveable bases shall not be permitted on final pavement surfaces. The Engineer/Inspector shall approve all application and removal procedures of fixed bases.

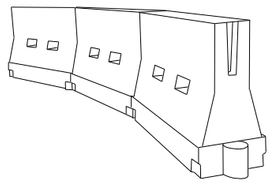

LONGITUDINAL CHANNELIZING DEVICES (LCD)

1. LCDs are crashworthy, lightweight, deformable devices that are highly visible, have good target value and can be connected together. They are not designed to contain or redirect a vehicle on impact.
2. LCDs may be used instead of a line of cones or drums.
3. LCDs shall be placed in accordance to application and installation requirements specific to the device, and used only when shown on the CWZTCD list.
4. LCDs should not be used to provide positive protection for obstacles, pedestrians or workers.
5. LCDs shall be supplemented with retroreflective delineation as required for temporary barriers on BC(7) when placed roughly parallel to the travel lanes.
6. LCDs used as barricades placed perpendicular to traffic should have at least one row of reflective sheeting meeting the requirements for barricade rails as shown on BC(10). Place reflective sheeting near the top of the LCD along the full length of the device.

WATER BALLASTED SYSTEMS USED AS BARRIERS

1. Water ballasted systems used as barriers shall not be used solely to channelize road users, but also to protect the work space per the appropriate Manual for Assessing Safety Hardware (MASH) crashworthiness requirements based on roadway speed and barrier application.
2. Water ballasted systems used to channelize vehicular traffic shall be supplemented with retroreflective delineation or channelizing devices to improve daytime/nighttime visibility. They may also be supplemented with pavement markings.
3. Water ballasted systems used as barriers shall be placed in accordance to application and installation requirements specific to the device, and used only when shown on the CWZTCD list.
4. Water ballasted systems used as barriers should not be used for a merging taper except in low speed (less than 45 MPH) urban areas. When used on a taper in a low speed urban area, the taper shall be delineated and the taper length should be designed to optimize road user operations considering the available geometric conditions.
5. When water ballasted systems used as barriers have blunt ends exposed to traffic, they should be attenuated as per manufacturer recommendations or flared to a point outside the clear zone.

If used to channelize pedestrians, longitudinal channelizing devices or water ballasted systems must have a continuous detectable bottom for users of long canes and the top of the unit shall not be less than 32 inches in height.

HOLLOW OR WATER BALLASTED SYSTEMS USED AS LONGITUDINAL CHANNELIZING DEVICES OR BARRIERS

Posted Speed	Formula	Minimum Desirable Taper Lengths ✳✳			Suggested Maximum Spacing of Channelizing Devices	
		10′ Offset	11′ Offset	12′ Offset	On a Taper	On a Tangent
30	$L=\frac{WS^2}{60}$	150′	165′	180′	30′	60′
35		205′	225′	245′	35′	70′
40		265′	295′	320′	40′	80′
45	L = WS	450′	495′	540′	45′	90′
50		500′	550′	600′	50′	100′
55		550′	605′	660′	55′	110′
60		600′	660′	720′	60′	120′
65		650′	715′	780′	65′	130′
70		700′	770′	840′	70′	140′
75		750′	825′	900′	75′	150′
80		800′	880′	960′	80′	160′

✳✳Taper lengths have been rounded off.
L=Length of Taper (FT.) W=Width of Offset (FT.)
S=Posted Speed (MPH)

SUGGESTED MAXIMUM SPACING OF CHANNELIZING DEVICES AND MINIMUM DESIRABLE TAPER LENGTHS

Texas Department of Transportation

Traffic Safety Division Standard

BARRICADE AND CONSTRUCTION CHANNELIZING DEVICES

BC(9)-21

FILE: bc-21.dgn	DN: TxDOT	CK: TxDOT	DW: TxDOT	CK: TxDOT
©TxDOT November 2002	CONT	SECT	JOB	HIGHWAY
REVISIONS				
9-07 8-14	DIST	COUNTY		SHEET NO.
7-13 5-21		WILLIAMSON		17

103

DISCLAIMER:
The use of this standard is governed by the "Texas Engineering Practice Act". No warranty of any kind is made by TxDOT for any purpose whatsoever. TxDOT assumes no responsibility for the conversion of this standard to other formats or for incorrect results or damages resulting from its use.

DATE: 1/9/2025 $TIME$
FILE: pw:\\jmt-pw.bentley.com:jmt-pw-01\Documents\Projects\2022\22-01219-001\Design\4 - Design Plan Set\2. TCP\Standards\bc-21.dgn

TYPE 3 BARRICADES

1. Refer to the Compliant Work Zone Traffic Control Devices List (CWZTCD) for details of the Type 3 Barricades and a list of all materials used in the construction of Type 3 Barricades.
2. Type 3 Barricades shall be used at each end of construction projects closed to all traffic.
3. Barricades extending across a roadway should have stripes that slope downward in the direction toward which traffic must turn in detouring. When both right and left turns are provided, the chevron striping may slope downward in both directions from the center of the barricade. Where no turns are provided at a closed road, striping should slope downward in both directions toward the center of roadway.
4. Striping of rails, for the right side of the roadway, should slope downward to the left. For the left side of the roadway, striping should slope downward to the right.
5. Identification markings may be shown only on the back of the barricade rails. The maximum height of letters and/or company logos used for identification shall be 1".
6. Barricades shall not be placed parallel to traffic unless an adequate clear zone is provided.
7. Warning lights shall NOT be installed on barricades.
8. Where barricades require the use of weights to keep from turning over, the use of sandbags with dry, cohesionless sand is recommended. The sandbags will be tied shut to keep the sand from spilling and to maintain a constant weight. Sand bags shall not be stacked in a manner that covers any portion of a barricade rails reflective sheeting. Rock, concrete, iron, steel or other solid objects will NOT be permitted. Sandbags should weigh a minimum of 35 lbs and a maximum of 50 lbs. Sandbags shall be made of a durable material that tears upon vehicular impact. Rubber (such as tire inner tubes) shall not be used for sandbags. Sandbags shall only be placed along or upon the base supports of the device and shall not be suspended above ground level or hung with rope, wire, chains or other fasteners.
9. Sheeting for barricades shall be retroreflective Type A or Type B conforming to Departmental Material Specification DMS-8300 unless otherwise noted.

Barricades shall NOT be used as a sign support.

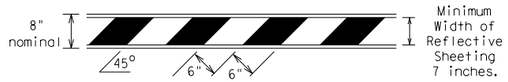

TYPICAL STRIPING DETAIL FOR BARRICADE RAIL

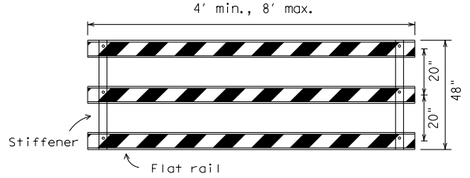

Stiffener may be inside or outside of support, but no more than 2 stiffeners shall be allowed on one barricade.

TYPICAL PANEL DETAIL
FOR SKID OR POST TYPE BARRICADES

Each roadway of a divided highway shall be barricaded in the same manner.

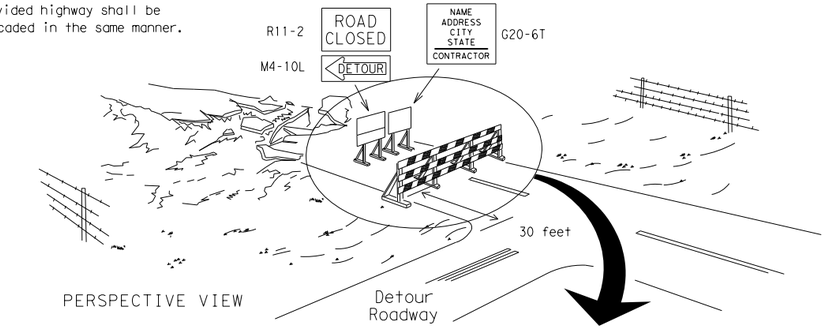

PERSPECTIVE VIEW

The three rails on Type 3 barricades shall be reflectorized orange and reflective white stripes on one side facing one-way traffic and both sides for two-way traffic.
Barricade striping should slant downward in the direction of detour.

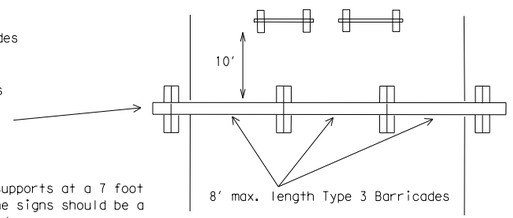

PLAN VIEW

1. Signs should be mounted on independent supports at a 7 foot mounting height in center of roadway. The signs should be a minimum of 10 feet behind Type 3 Barricades.
2. Advance signing shall be as specified elsewhere in the plans.

TYPE 3 BARRICADE (POST AND SKID) TYPICAL APPLICATION

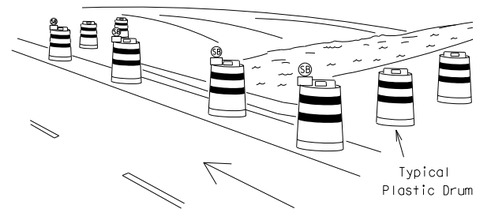

PERSPECTIVE VIEW

1. Where positive redirectional capability is provided, drums may be omitted.
2. Plastic construction fencing may be used with drums for safety as required in the plans.
3. Vertical Panels on flexible support may be substituted for drums when the shoulder width is less than 4 feet.
4. When the shoulder width is greater than 12 feet, steady-burn lights may be omitted if drums are used.
5. Drums must extend the length of the culvert widening.

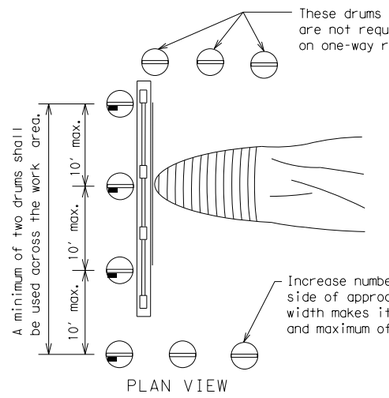

PLAN VIEW

LEGEND	
	Plastic drum
	Plastic drum with steady burn light or yellow warning reflector
SB	Steady burn warning light or yellow warning reflector

CULVERT WIDENING OR OTHER ISOLATED WORK WITHIN THE PROJECT LIMITS

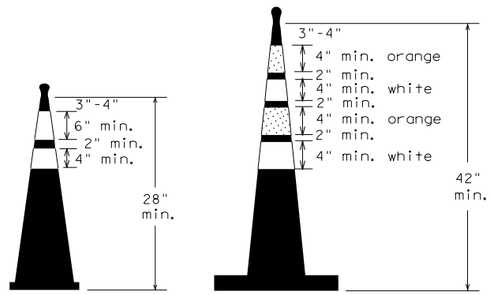

Two-Piece cones

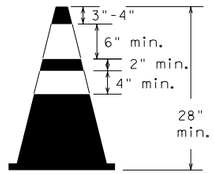

One-Piece cones

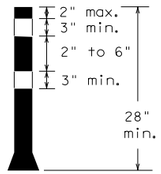

Tubular Marker

28" Cones shall have a minimum weight of 9 1/2 lbs.

42" 2-piece cones shall have a minimum weight of 30 lbs. including base.

1. Traffic cones and tubular markers shall be predominantly orange, and meet the height and weight requirements shown above.
2. One-piece cones have the body and base of the cone molded in one consolidated unit. Two-piece cones have a cone shaped body and a separate rubber base, or ballast, that is added to keep the device upright and in place.
3. Two-piece cones may have a handle or loop extending up to 8" above the minimum height shown, in order to aid in retrieving the device.
4. Cones or tubular markers shall have white or white and orange reflective bands as shown above. The reflective bands shall have a smooth, sealed outer surface and meet the requirements of Departmental Material Specification DMS-8300 Type A or Type B.
5. 28" cones and tubular markers are generally suitable for short duration and short-term stationary work as defined on BC(4). These should not be used for intermediate-term or long-term stationary work unless personnel is on-site to maintain them in their proper upright position.
6. 42" two-piece cones, vertical panels or drums are suitable for all work zone durations.
7. Cones or tubular markers used on each project should be of the same size and shape.

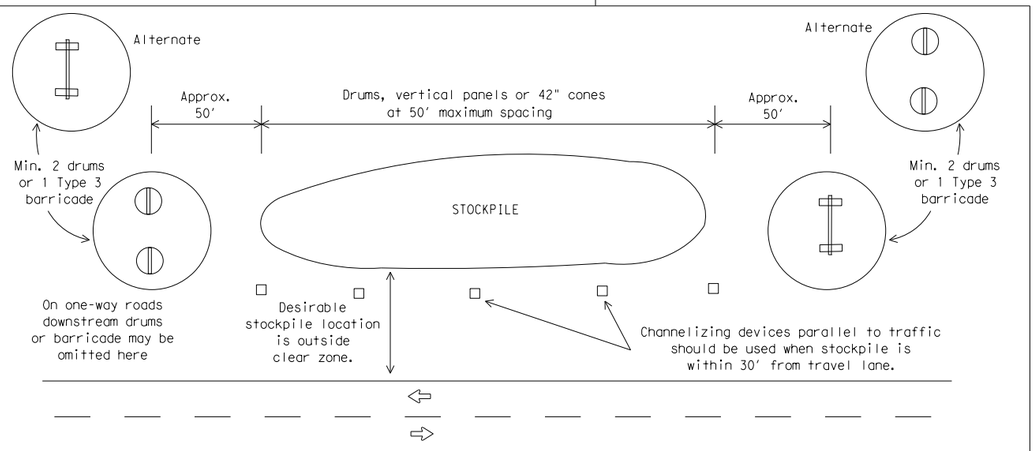

TRAFFIC CONTROL FOR MATERIAL STOCKPILES

SHEET 10 OF 12

Texas Department of Transportation

Traffic Safety Division Standard

BARRICADE AND CONSTRUCTION CHANNELIZING DEVICES

BC(10)-21

FILE: bc-21.dgn	DN: TxDOT	CK: TxDOT	DW: TxDOT	CK: TxDOT
©TxDOT November 2002	CONT	SECT	JOB	HIGHWAY
REVISIONS				
9-07 8-14	DIST	COUNTY		SHEET NO.
7-13 5-21		WILLIAMSON		18

104

DISCLAIMER:
The use of this standard is governed by the "Texas Engineering Practice Act". No warranty of any kind is made by TxDOT for any purpose whatsoever. TxDOT assumes no responsibility for the conversion of this standard to other formats or for incorrect results or damages resulting from its use.

DATE: 1/9/2025 $TIME$
FILE: pw:\\jmt-pw.bentley.com:jmt-pw-01\Documents\Projects\2022\22-01219-001\Design\Design\V4 - Design\Plan Set\2. TCP\Standards\bc-21.dgn

WORK ZONE PAVEMENT MARKINGS

GENERAL

1. The Contractor shall be responsible for maintaining work zone and existing pavement markings, in accordance with the standard specifications and special provisions, on all roadways open to traffic within the CSJ limits unless otherwise stated in the plans.
2. Color, patterns and dimensions shall be in conformance with the "Texas Manual on Uniform Traffic Control Devices" (TMUTCD).
3. Additional supplemental pavement marking details may be found in the plans or specifications.
4. Pavement markings shall be installed in accordance with the TMUTCD and as shown on the plans.
5. When short term markings are required on the plans, short term markings shall conform with the TMUTCD, the plans and details as shown on the Standard Plan Sheet WZ(STPM).
6. When standard pavement markings are not in place and the roadway is opened to traffic, DO NOT PASS signs shall be erected to mark the beginning of the sections where passing is prohibited and PASS WITH CARE signs at the beginning of sections where passing is permitted.
7. All work zone pavement markings shall be installed in accordance with Item 662, "Work Zone Pavement Markings."

RAISED PAVEMENT MARKERS

1. Raised pavement markers are to be placed according to the patterns on BC(12).
2. All raised pavement markers used for work zone markings shall meet the requirements of Item 672, "RAISED PAVEMENT MARKERS" and Departmental Material Specification DMS-4200 or DMS-4300.

PREFABRICATED PAVEMENT MARKINGS

1. Removable prefabricated pavement markings shall meet the requirements of DMS-8241.
2. Non-removable prefabricated pavement markings (foil back) shall meet the requirements of DMS-8240.

MAINTAINING WORK ZONE PAVEMENT MARKINGS

1. The Contractor will be responsible for maintaining work zone pavement markings within the work limits.
2. Work zone pavement markings shall be inspected in accordance with the frequency and reporting requirements of work zone traffic control device inspections as required by Form 599.
3. The markings should provide a visible reference for a minimum distance of 300 feet during normal daylight hours and 160 feet when illuminated by automobile low-beam headlights at night, unless sight distance is restricted by roadway geometrics.
4. Markings failing to meet this criteria within the first 30 days after placement shall be replaced at the expense of the Contractor as per Specification Item 662.

REMOVAL OF PAVEMENT MARKINGS

1. Pavement markings that are no longer applicable, could create confusion or direct a motorist toward or into the closed portion of the roadway shall be removed or obliterated before the roadway is opened to traffic.
2. The above shall not apply to detours in place for less than three days, where flaggers and/or sufficient channelizing devices are used in lieu of markings to outline the detour route.
3. Pavement markings shall be removed to the fullest extent possible, so as not to leave a discernable marking. This shall be by any method approved by TxDOT Specification Item 677 for "Eliminating Existing Pavement Markings and Markers".
4. The removal of pavement markings may require resurfacing or seal coating portions of the roadway as described in Item 677.
5. Subject to the approval of the Engineer, any method that proves to be successful on a particular type pavement may be used.
6. Blast cleaning may be used but will not be required unless specifically shown in the plans.
7. Over-painting of the markings SHALL NOT BE permitted.
8. Removal of raised pavement markers shall be as directed by the Engineer.
9. Removal of existing pavement markings and markers will be paid for directly in accordance with Item 677, "ELIMINATING EXISTING PAVEMENT MARKINGS AND MARKERS," unless otherwise stated in the plans.
10. Black-out marking tape may be used to cover conflicting existing markings for periods less than two weeks when approved by the Engineer.

Temporary Flexible-Reflective Roadway Marker Tabs

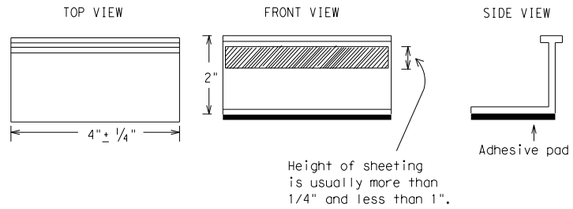

STAPLES OR NAILS SHALL NOT BE USED TO SECURE TEMPORARY FLEXIBLE-REFLECTIVE ROADWAY MARKER TABS TO THE PAVEMENT SURFACE

1. Temporary flexible-reflective roadway marker tabs used as guidemarks shall meet the requirements of DMS-8242.
2. Tabs detailed on this sheet are to be inspected and accepted by the Engineer or designated representative. Sampling and testing is not normally required, however at the option of the Engineer, either "A" or "B" below may be imposed to assure quality before placement on the roadway.
   A. Select five (5) or more tabs at random from each lot or shipment and submit to the Construction Division, Materials and Pavement Section to determine specification compliance.
   B. Select five (5) tabs and perform the following test. Affix five (5) tabs at 24 inch intervals on an asphaltic pavement in a straight line. Using a medium size passenger vehicle or pickup, run over the markers with the front and rear tires at a speed of 35 to 40 miles per hour, four (4) times in each direction. No more than one (1) out of the five (5) reflective surfaces shall be lost or displaced as a result of this test.
3. Small design variances may be noted between tab manufacturers.
4. See Standard Sheet WZ(STPM) for tab placement on new pavements. See Standard Sheet TCP(7-1) for tab placement on seal coat work.

RAISED PAVEMENT MARKERS USED AS GUIDEMARKS

1. Raised pavement markers used as guidemarks shall be from the approved product list, and meet the requirements of DMS-4200.
2. All temporary construction raised pavement markers provided on a project shall be of the same manufacturer.
3. Adhesive for guidemarks shall be bituminous material hot applied or butyl rubber pad for all surfaces, or thermoplastic for concrete surfaces.

Guidemarks shall be designated as:
YELLOW - (two amber reflective surfaces with yellow body).
WHITE - (one silver reflective surface with white body).

DEPARTMENTAL MATERIAL SPECIFICATIONS	
PAVEMENT MARKERS (REFLECTORIZED)	DMS-4200
TRAFFIC BUTTONS	DMS-4300
EPOXY AND ADHESIVES	DMS-6100
BITUMINOUS ADHESIVE FOR PAVEMENT MARKERS	DMS-6130
PERMANENT PREFABRICATED PAVEMENT MARKINGS	DMS-8240
TEMPORARY REMOVABLE, PREFABRICATED PAVEMENT MARKINGS	DMS-8241
TEMPORARY FLEXIBLE, REFLECTIVE ROADWAY MARKER TABS	DMS-8242

A list of prequalified reflective raised pavement markers, non-reflective traffic buttons, roadway marker tabs and other pavement markings can be found at the Material Producer List web address shown on BC(1).

Texas Department of Transportation | Traffic Safety Division Standard

BARRICADE AND CONSTRUCTION PAVEMENT MARKINGS

BC(11)-21

FILE: bc-21.dgn	DN: TxDOT	CK: TxDOT	DW: TxDOT	CK: TxDOT
©TxDOT February 1998	CONT	SECT	JOB	HIGHWAY
REVISIONS 2-98 9-07 5-21 / 1-02 7-13 / 11-02 8-14	DIST	COUNTY		SHEET NO.
105		WILLIAMSON		19

DISCLAIMER:
The use of this standard is governed by the "Texas Engineering Practice Act". No warranty of any kind is made by TxDOT for any purpose whatsoever. TxDOT assumes no responsibility for the conversion of this standard to other formats or for incorrect results or damages resulting from its use.

DATE: 1/9/2025 $TIME$
FILE: pw:\\jmt-pw.bentley.com:jmt-pw-01\Documents\Projects\2022\22-01219-001\Design\4 - Design\Plan Set\2. TCP\Standards\bc-21.dgn

PAVEMENT MARKING PATTERNS

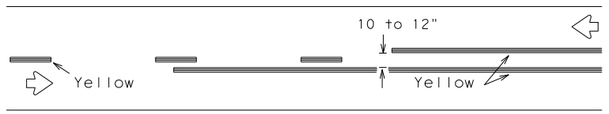

REFLECTORIZED PAVEMENT MARKINGS - PATTERN A

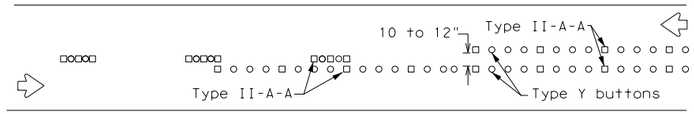

RAISED PAVEMENT MARKERS - PATTERN A

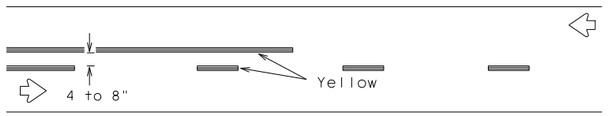

REFLECTORIZED PAVEMENT MARKINGS - PATTERN B

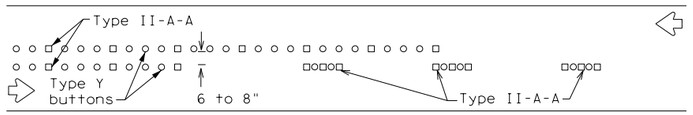

RAISED PAVEMENT MARKERS - PATTERN B

Pattern A is the TXDOT Standard, however Pattern B may be used if approved by the Engineer.
Prefabricated markings may be substituted for reflectorized pavement markings.

CENTER LINE & NO-PASSING ZONE BARRIER LINES FOR TWO-LANE, TWO-WAY HIGHWAYS

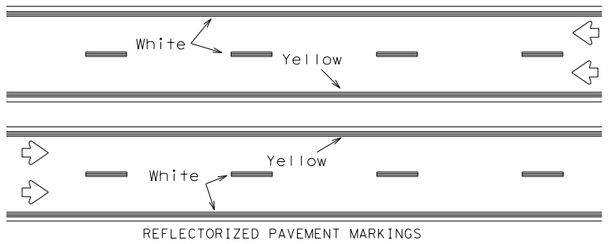

REFLECTORIZED PAVEMENT MARKINGS

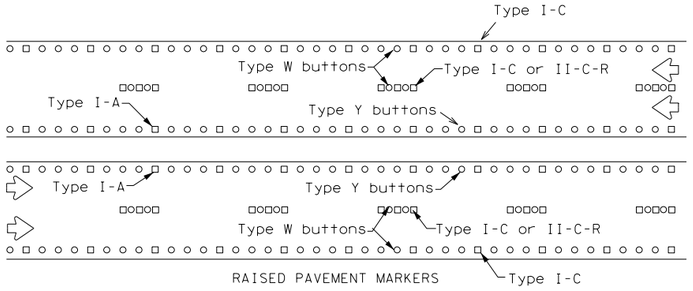

RAISED PAVEMENT MARKERS

Prefabricated markings may be substituted for reflectorized pavement markings.

EDGE & LANE LINES FOR DIVIDED HIGHWAY

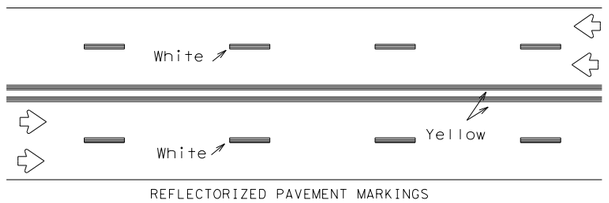

REFLECTORIZED PAVEMENT MARKINGS

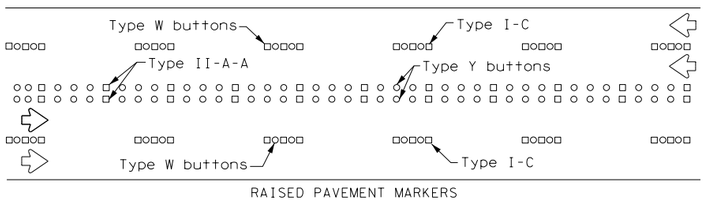

RAISED PAVEMENT MARKERS

Prefabricated markings may be substituted for reflectorized pavement markings.

LANE & CENTER LINES FOR MULTILANE UNDIVIDED HIGHWAYS

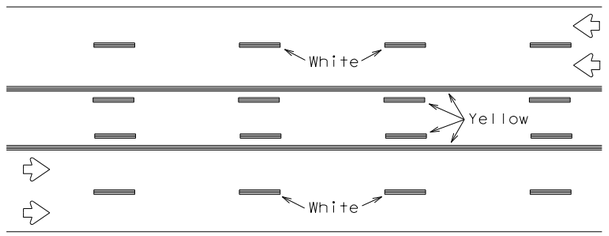

REFLECTORIZED PAVEMENT MARKINGS

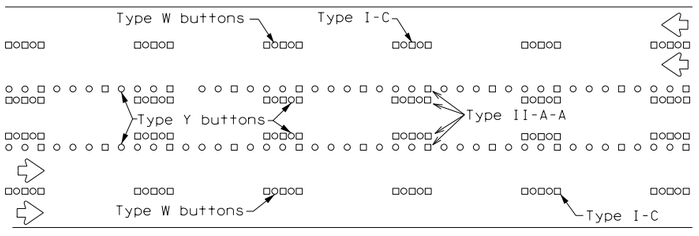

RAISED PAVEMENT MARKERS

Prefabricated markings may be substituted for reflectorized pavement markings.

TWO-WAY LEFT TURN LANE

STANDARD WORK ZONE PAVEMENT MARKINGS DETAILS

SOLID LINES

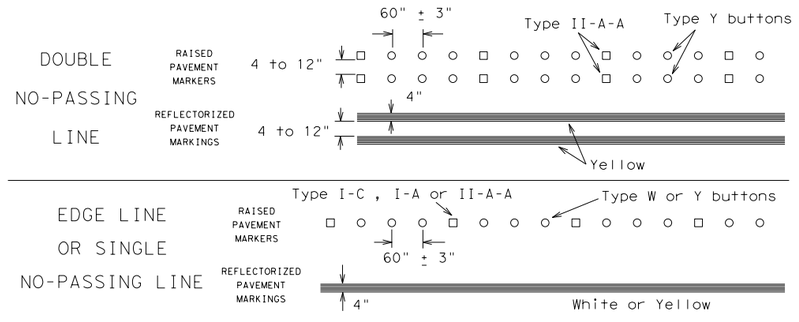

BROKEN LINES

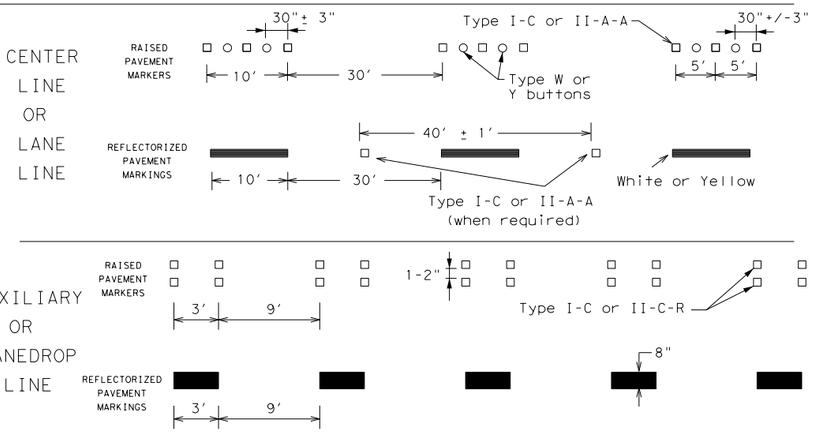

REMOVABLE MARKINGS WITH RAISED PAVEMENT MARKERS

If raised pavement markers are used to supplement REMOVABLE markings, the markers shall be applied to the top of the tape at the approximate mid length of tape used for broken lines or at 20 foot spacing for solid lines. This allows an easier removal of raised pavement markers and tape.

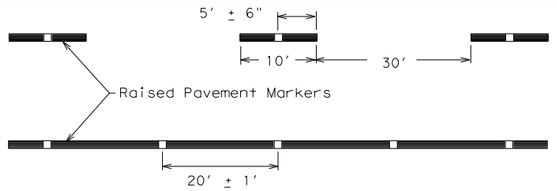

Centerline only - not to be used on edge lines

Raised pavement markers used as standard pavement markings shall be from the approved products list and meet the requirements of Item 672 "RAISED PAVEMENT MARKERS."

SHEET 12 OF 12

Texas Department of Transportation

Traffic Safety Division Standard

BARRICADE AND CONSTRUCTION PAVEMENT MARKING PATTERNS

BC(12)-21

FILE: bc-21.dgn	DN: TxDOT	CK: TxDOT	DW: TxDOT	CK: TxDOT
©TxDOT February 1998	CONT	SECT	JOB	HIGHWAY
REVISIONS 1-97 9-07 5-21 2-98 7-13 11-02 8-14	DIST	COUNTY		SHEET NO.
		WILLIAMSON		20

106

DISCLAIMER:
The use of this standard is governed by the "Texas Engineering Practice Act". No warranty of any kind is made by TxDOT for any purpose whatsoever. TxDOT assumes no responsibility for the conversion of this standard to other formats or for incorrect results or damages resulting from its use.

DATE: 1/9/2025 $TIME$
FILE: pw:\\jmt-pw.bentley.com:jmt-pw-01\Documents\Projects\2022\22-01219-001\design\standards\tcp2-1-18.dgn

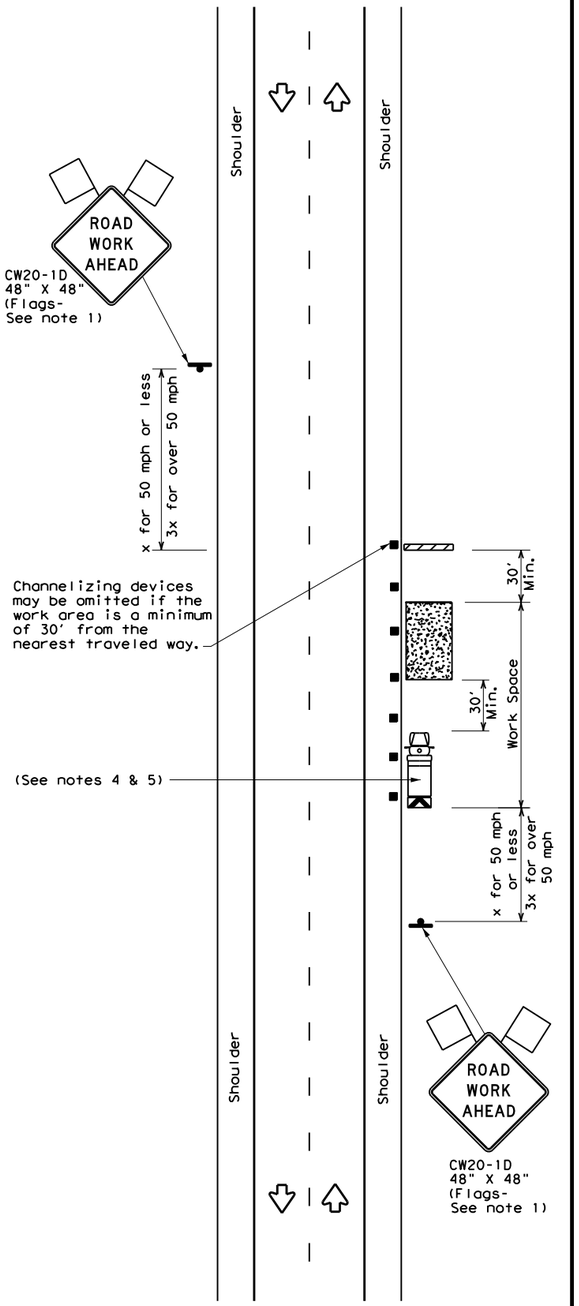

TCP (2-1a)

WORK SPACE NEAR SHOULDER
Conventional Roads

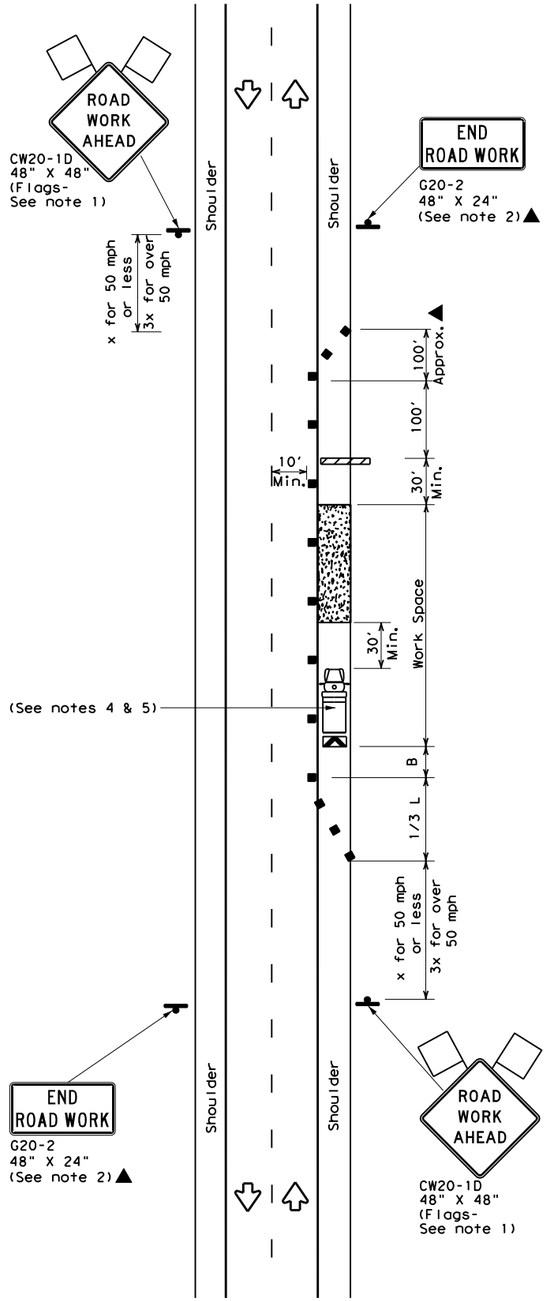

TCP (2-1b)

WORK SPACE ON SHOULDER
Conventional Roads

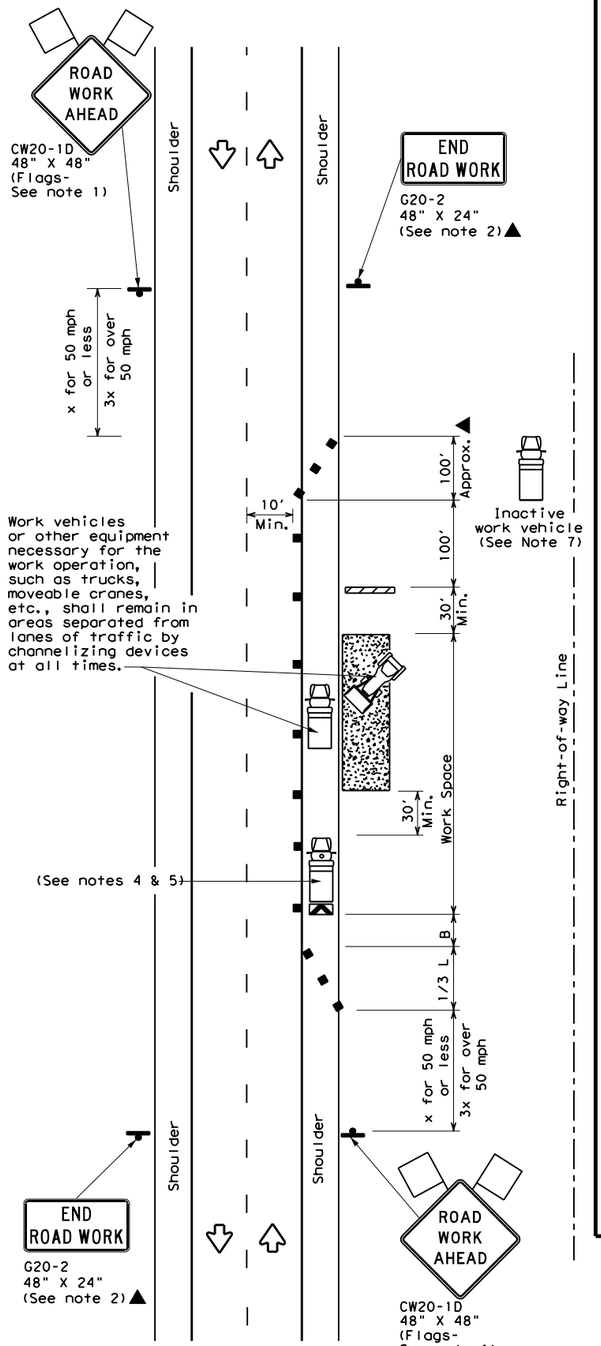

TCP (2-1c)

WORK VEHICLES ON SHOULDER
Conventional Roads

LEGEND			
	Type 3 Barricade	■ ■	Channelizing Devices
	Heavy Work Vehicle		Truck Mounted Attenuator (TMA)
	Trailer Mounted Flashing Arrow Board	M	Portable Changeable Message Sign (PCMS)
	Sign		Traffic Flow
	Flag		Flagger

Posted Speed *	Formula	Minimum Desirable Taper Lengths ** 10' Offset	11' Offset	12' Offset	Suggested Maximum Spacing of Channelizing Devices On a Taper	On a Tangent	Minimum Sign Spacing "X" Distance	Suggested Longitudinal Buffer Space "B"
30	$L=\frac{WS^2}{60}$	150'	165'	180'	30'	60'	120'	90'
35		205'	225'	245'	35'	70'	160'	120'
40		265'	295'	320'	40'	80'	240'	155'
45	L=WS	450'	495'	540'	45'	90'	320'	195'
50		500'	550'	600'	50'	100'	400'	240'
55		550'	605'	660'	55'	110'	500'	295'
60		600'	660'	720'	60'	120'	600'	350'
65		650'	715'	780'	65'	130'	700'	410'
70		700'	770'	840'	70'	140'	800'	475'
75		750'	825'	900'	75'	150'	900'	540'

* Conventional Roads Only

** Taper lengths have been rounded off.
L=Length of Taper(FT) W=Width of Offset(FT) S=Posted Speed(MPH)

TYPICAL USAGE				
MOBILE	SHORT DURATION	SHORT TERM STATIONARY	INTERMEDIATE TERM STATIONARY	LONG TERM STATIONARY
	✓	✓	✓	✓

GENERAL NOTES

1. Flags attached to signs where shown, are REQUIRED.
2. All traffic control devices illustrated are REQUIRED, except those denoted with the triangle symbol may be omitted when stated in the plans, or for routine maintenance work, when approved by the Engineer.
3. Stockpiled material should be placed a minimum of 30 feet from nearest traveled way.
4. Shadow Vehicle with TMA and high intensity rotating, flashing, oscillating or strobe lights. A Shadow Vehicle with a TMA should be used anytime it can be positioned 30 to 100 feet in advance of the area of crew exposure without adversely affecting the performance or quality of the work. If workers are no longer present but road or work conditions require the traffic control to remain in place, Type 3 Barricades or other channelizing devices may be substituted for the Shadow Vehicle and TMA.
5. Additional Shadow Vehicles with TMAs may be positioned off the paved surface, next to those shown in order to protect a wider work space.
6. See TCP(5-1) for shoulder work on divided highways, expressways and freeways.
7. Inactive work vehicles or other equipment should be parked near the right-of-way line and not parked on the paved shoulder.
8. CW21-5 "SHOULDER WORK" signs may be used in place of CW20-1D "ROAD WORK AHEAD" signs for shoulder work on conventional roadways.

Texas Department of Transportation

Traffic Operations Division Standard

TRAFFIC CONTROL PLAN CONVENTIONAL ROAD SHOULDER WORK

TCP(2-1)-18

FILE: tcp2-1-18.dgn	DN:	CK:	DW:	CK:
©TxDOT December 1985	CONT	SECT	JOB	HIGHWAY
REVISIONS	C	S	J	HWY
2-94 4-98	DIST	COUNTY		SHEET NO.
8-95 2-12	DST	WILLIAMSON		21
1-97 2-18				

161

DISCLAIMER:
The use of this standard is governed by the "Texas Engineering Practice Act". No warranty of any kind is made by TxDOT for any purpose whatsoever. TxDOT assumes no responsibility for the conversion of this standard to other formats or for incorrect results or damages resulting from its use.

DATE: 1/9/2025
FILE: pw:\\jmt-pw.bentley.com:jmt-pw-01\Documents\Projects\2022\22-01219-001\Design\wzbts-13.dgn

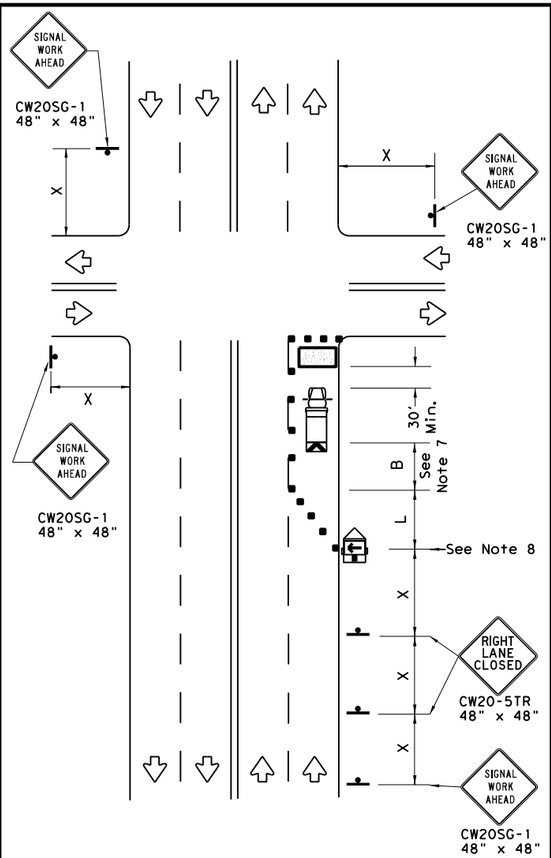

NEAR SIDE LANE CLOSURE

SHORT DURATION OR SHORT TERM STATIONARY

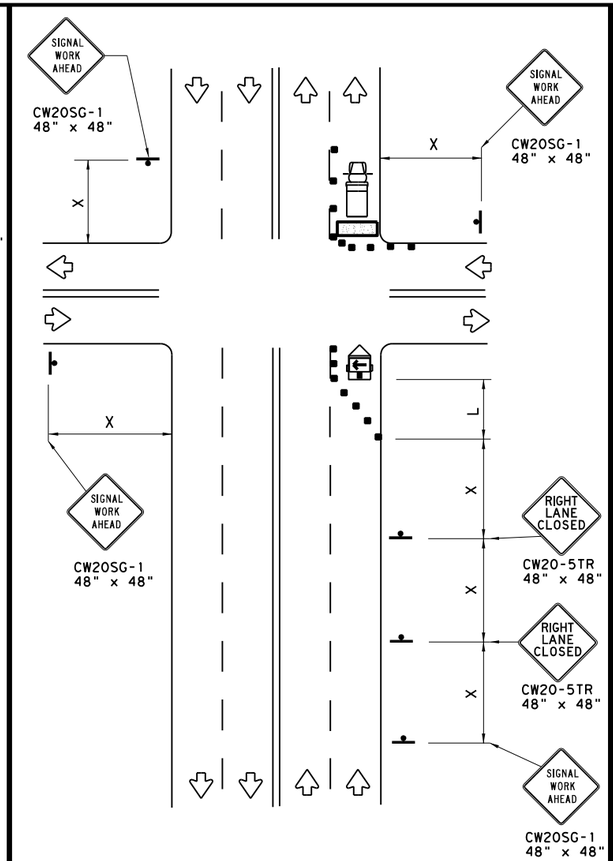

FAR SIDE RIGHT LANE CLOSURE

SHORT DURATION OR SHORT TERM STATIONARY

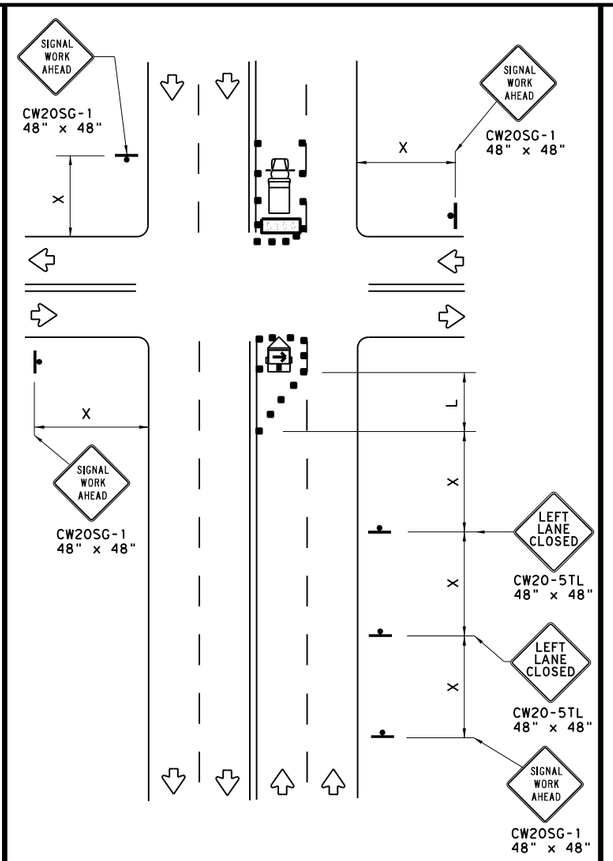

FAR SIDE LEFT LANE CLOSURE

SHORT DURATION OR SHORT TERM STATIONARY

LEGEND			
	Type 3 Barricade		Channelizing Devices
	Heavy Work Vehicle		Truck Mounted Attenuator (TMA)
	Trailer Mounted Flashing Arrow Board	M	Portable Changeable Message Sign (PCMS)
	Sign		Traffic Flow
	Flag		Flagger

Posted Speed *	Formula	Minimum Desirable Taper Lengths ** 10' Offset	11' Offset	12' Offset	Suggested Maximum Spacing of Channelizing Devices: On a Taper	On a Tangent	Minimum Sign Spacing "X" Distance	Suggested Longitudinal Buffer Space "B"
30	$L = \frac{WS^2}{60}$	150'	165'	180'	30'	60'	120'	90'
35		205'	225'	245'	35'	70'	160'	120'
40		265'	295'	320'	40'	80'	240'	155'
45	L = WS	450'	495'	540'	45'	90'	320'	195'
50		500'	550'	600'	50'	100'	400'	240'
55		550'	605'	660'	55'	110'	500'	295'
60		600'	660'	720'	60'	120'	600'	350'
65		650'	715'	780'	65'	130'	700'	410'
70		700'	770'	840'	70'	140'	800'	475'
75		750'	825'	900'	75'	150'	900'	540'

* Conventional Roads Only

** Taper lengths have been rounded off.
L=Length of Taper(FT) W=Width of Offset(FT) S=Posted Speed(MPH)

WORKERS IN BUCKET TRUCKS SHALL NOT WORK ABOVE OPEN LANES OF TRAFFIC.

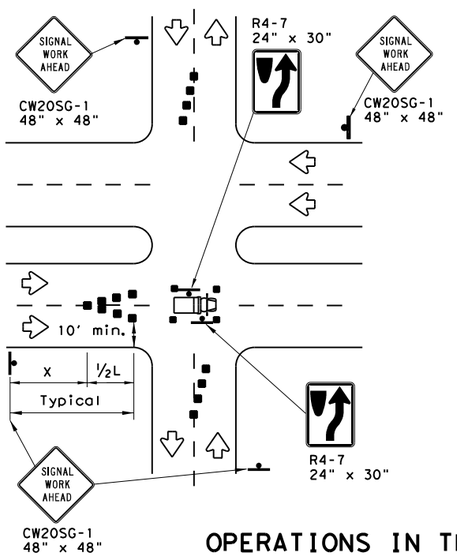

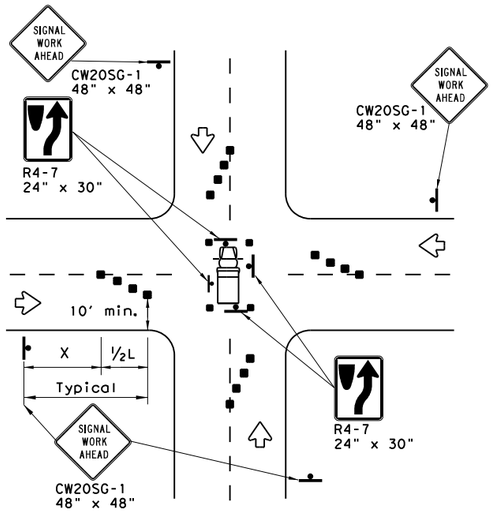

OPERATIONS IN THE INTERSECTION

SHORT DURATION

GENERAL NOTES

1. The minimum size channelizing device is the 28" cone. 42" Two-piece cones, drums, vertical panels or barricades will be required when the device must be left unattended at night.
2. Obstructions or hazards at the work area shall be clearly marked and delineated at all times.
3. Flaggers and Flagger Symbol (CW20-7) signs may be required according to field conditions.
4. Vehicles parked in roadway shall be equipped with at least two high intensity rotating, flashing, oscillating or strobe type lights.
5. High level warning devices (flag trees) may be used at corners of the vehicle.
6. When work operations are performed on existing signals, the signals may be placed in flashing red mode when approved by the engineer. If existing signals do not have power, All-Way Stop (R1-1 and R1-3P) signs may be implemented when approved by the engineer.
7. For Short-Term Stationary work the buffer space "B" from the above table should be used if field conditions permit. For Short Duration (less than 1 hour) any buffer space provided will enhance the safety of the setup.
8. The arrow board at this location may be omitted for Short Duration work if the work vehicle has an arrow board in operation. As an option, the arrow board may be placed at the end of the taper in the closed lane if space is not available at the beginning of the taper.
9. Signs and devices for the NEAR SIDE LANE CLOSURE may be altered for a left lane closure by using a LEFT LANE CLOSED (CW20-5TL) and adding channelizing devices on the centerline to protect the work space from opposing traffic.

Texas Department of Transportation | Traffic Operations Division Standard

TRAFFIC SIGNAL WORK TYPICAL DETAILS

WZ(BTS-1)-13

FILE: wzbts-13.dgn	DN: TxDOT	CK: TxDOT	DW: TxDOT	CK: TxDOT
©TxDOT April 1992	CONT	SECT	JOB	HIGHWAY
REVISIONS				
2-98 10-99 7-13	DIST	COUNTY		SHEET NO.
4-98 3-03		WILLIAMSON		22

114

DISCLAIMER:
The use of this standard is governed by the "Texas Engineering Practice Act". No warranty of any kind is made by TxDOT for any purpose whatsoever. TxDOT assumes no responsibility for the conversion of this standard to other formats or for incorrect results or damages resulting from its use.

DATE: 1/9/2025
FILE: pw:\\jmt-pw.bentley.com:jmt-pw-01\Documents\Projects\2022\22-01219-001\Design\Design Deliverables\Standards\wzbts-13.dgn

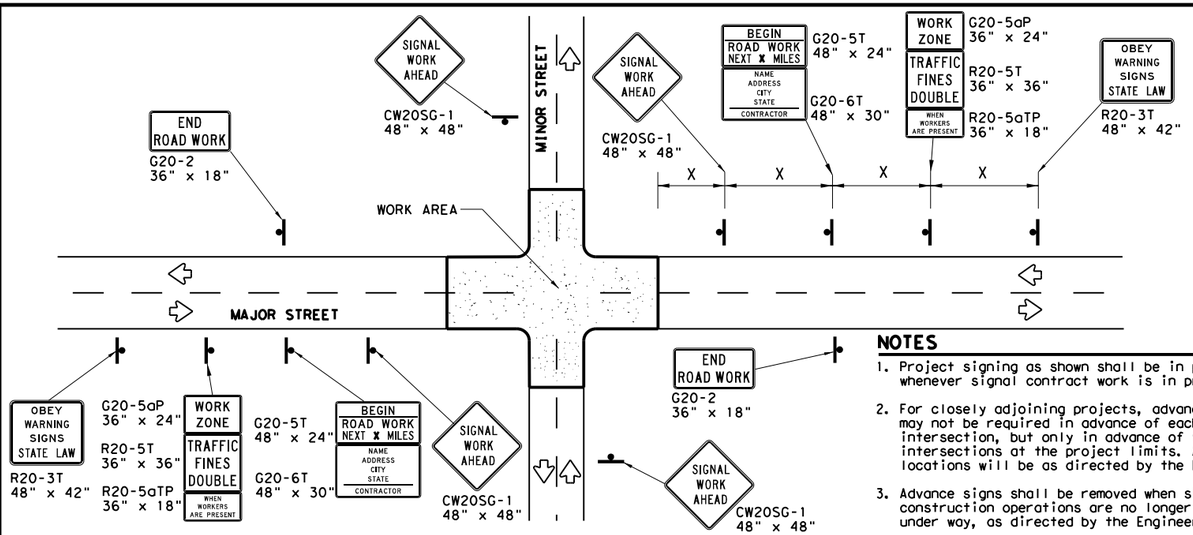

TYPICAL ADVANCE SIGNAL PROJECT SIGNING

FOR LONG TERM and INTERMEDIATE-TERM STATIONARY WORK OPERATIONS

NOTES

1. Project signing as shown shall be in place whenever signal contract work is in progress.
2. For closely adjoining projects, advance signing may not be required in advance of each intersection, but only in advance of the intersections at the project limits. Actual locations will be as directed by the Engineer.
3. Advance signs shall be removed when signal construction operations are no longer under way, as directed by the Engineer.
4. Warning sign spacing shown is typical for both directions.
5. See the Table on sheet 1 of 2 for Typical warning sign spacing.

GENERAL NOTES FOR WORK ZONE SIGNS

1. Signs shall be installed and maintained in a straight and plumb condition.
2. Wooden sign posts shall be painted white.
3. Barricades shall NOT be used as sign supports.
4. Nails shall NOT be used to attach signs to any support.
5. All signs shall be installed in accordance with the plans or as directed by the Engineer.
6. The Contractor shall furnish the sign design shown in the plans or in the "Standard Highway Sign Designs for Texas" (SHSD).
7. The Contractor shall furnish sign supports and substrates listed in the "Compliant Work Zone Traffic Control Device List" (CWZTCD), installed as per the manufacturer's recommendations.
8. Temporary signs that have damaged or cracked substrates and/or damaged or marred reflective sheeting shall be replaced as directed by the Engineer.
9. Identification markings may be shown only on the back of the sign substrate. The maximum height of letters and/or company logos used for identification shall be 1".
10. Damaged wood posts shall be replaced. Splicing wood posts will not be allowed.

DURATION OF WORK

1. Work zone durations are defined in Part 6, Section 6G.02 of the Texas Manual on Uniform Traffic Control Devices (TMUTCD).

SIGN MOUNTING HEIGHT

1. Sign height of Long-term/Intermediate-term warning signs shall be as shown on Figure 6F-1 of the TMUTCD.
2. Sign height of Short-term/Short Duration warning signs shall be as shown on Figure 6F-2 of the TMUTCD.
3. Regulatory signs shall be mounted at least 7 feet, but not more than 9 feet, above the paved surface regardless of work duration.

REMOVING OR COVERING

1. When sign messages may be confusing or do not apply, the signs shall be removed or completely covered, unless otherwise approved by the Engineer.
2. When signs are covered, the material used shall be opaque, such as heavy mil black plastic, or other materials which will cover the entire sign face and maintain their opaque properties under automobile headlights at night without damaging the sign sheeting. Burlap, or heavy materials such as plywood or aluminum shall not be used to cover signs.
3. Duct tape or other adhesive material shall NOT be affixed to a sign face.
4. Signs and anchor stubs shall be removed and holes back filled upon completion of the work.

REFLECTIVE SHEETING

1. All signs shall be retroreflective and constructed of sheeting meeting the requirements of the DMS and color usage table shown on this sheet.

SIGN SUPPORT WEIGHTS

1. Weights used to keep signs from turning over should be sandbags filled with dry, cohesionless material.
2. The sandbags will be tied shut to keep the sand from spilling and to maintain a constant weight.
3. Rock, concrete, iron, steel or other solid objects will not be permitted for use as sign support weights.
4. Sandbags should weigh a minimum of 35 lbs and a maximum of 50 lbs.
5. Sandbags shall be made of a durable material that tears upon vehicular impact. Rubber, such as tire inner tubes, shall not be used.
6. Rubber ballasts designed for channelizing devices should not be used for ballast on portable sign supports. Sign supports designed and manufactured with rubber bases may be used when shown on the CWZTCD list.
7. Sandbags shall only be placed along or laid over the base supports of the traffic control device and shall not be suspended above ground level or hung with rope, wire, chains or other fastners. Sandbags shall be placed along the length of the skids to weigh down the sign support.
8. Sandbags shall NOT be placed under the skid and shall not be used to level sign supports placed on slopes.

LEGEND	
	Sign
	Channelizing Devices
	Type 3 Barricade

DEPARTMENTAL MATERIAL SPECIFICATIONS	
SIGN FACE MATERIALS	DMS-8300
FLEXIBLE ROLL-UP REFLECTIVE SIGNS	DMS-8310

COLOR	USAGE	SHEETING MATERIAL
ORANGE	BACKGROUND	TYPE B_{FL} OR TYPE C_{FL} SHEETING
WHITE	BACKGROUND	TYPE A SHEETING
BLACK	LEGEND & BORDERS	ACRYLIC NON-REFLECTIVE SHEETING

Only pre-qualified products shall be used. A copy of the "Compliant Work Zone Traffic Control Devices List" (CWZTCD) describes pre-qualified products and their sources and may be found at the following web address:
http://www.txdot.gov/txdot_library/publications/construction.htm

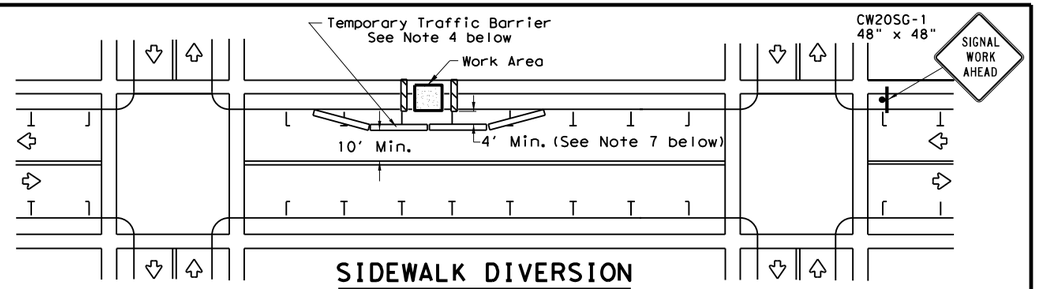

SIDEWALK DIVERSION

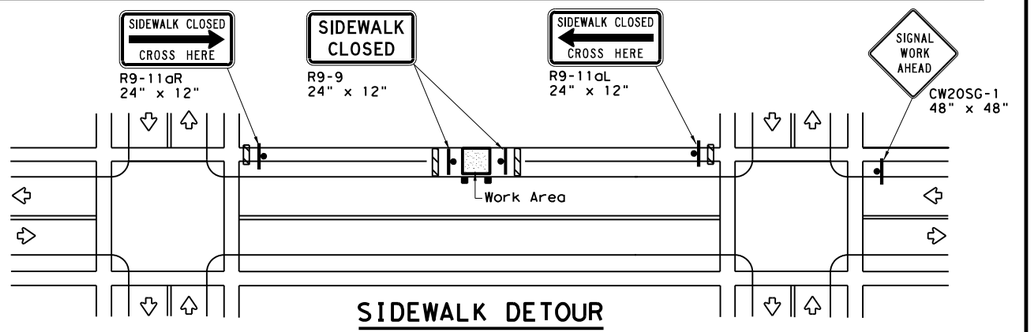

SIDEWALK DETOUR

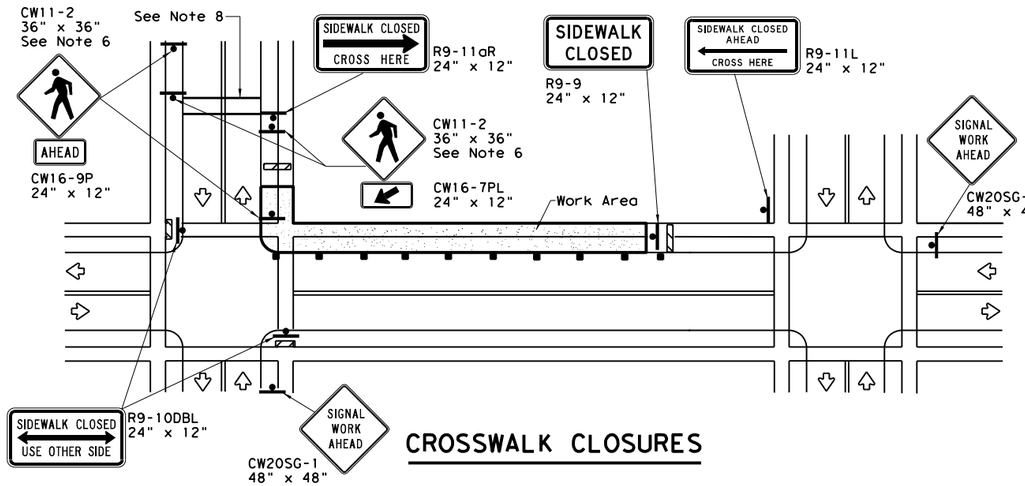

CROSSWALK CLOSURES

PEDESTRIAN CONTROL

1. Holes, trenches or other hazards shall be adequately protected by covering, delineating or surrounding the hazard with orange plastic pedestrian fencing or longitudinal channelizing devices, or as directed by the Engineer.
2. "CROSSWALK CLOSURES" as detailed above will require the Engineer's approval prior to installation.
3. R9 series signs shown may be placed on supports detailed on the BC standards or CWZTCD list, or when fabricated from approved lightweight plastic substrates, they may be mounted on top of a plastic drum at or near the location shown.
4. For speeds less than 45 mph longitudinal channelizing devices may be used instead of traffic barriers when approved by the Engineer. Attenuation of blunt ends and installation of water filled devices shall be as per BC(9) and manufacturer's recommendations.
5. Location of devices are for general guidance. Actual device spacing and location must be field adjusted to meet actual conditions.
6. Where pedestrians with visual disabilities normally use the closed sidewalk Detectable Pedestrian Barricades should be used instead of the Type 3 Barricades shown.
7. The width of existing sidewalk should be maintained if practical.
8. Pavement markings for mid-block crosswalks shall be paid for under the appropriate bid items.
9. When crosswalks or other pedestrian facilities are closed or relocated, temporary facilities shall be detectable and shall include accessibility features consistent with the features present in the existing pedestrian facility.

Texas Department of Transportation

Traffic Operations Division Standard

TRAFFIC SIGNAL WORK BARRICADES AND SIGNS

WZ(BTS-2)-13

FILE: wzbts-13.dgn	DN: TxDOT	CK: TxDOT	DW: TxDOT	CK: TxDOT
©TxDOT April 1992	CONT	SECT	JOB	HIGHWAY
REVISIONS				
2-98 10-99 7-13	DIST	COUNTY		SHEET NO.
4-98 3-03		WILLIAMSON		23

115

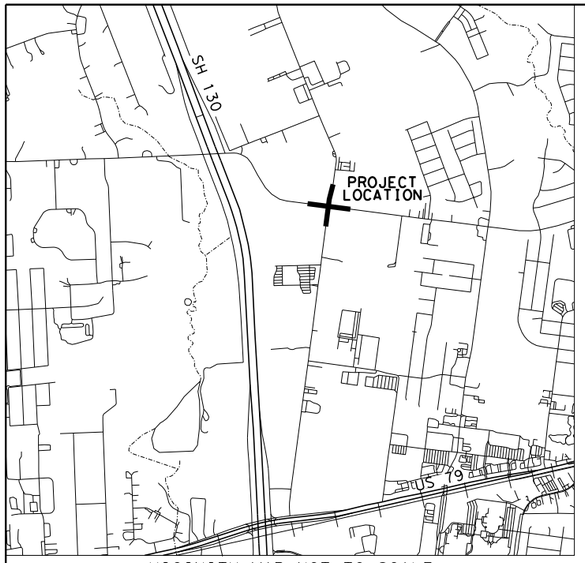

VICINITY MAP NOT TO SCALE

CONTROL INVERSE TABLE			
FROM	TO	BEARING	DISTANCE
1	2	N40°15'07"W	274.09'
2	3	S65°12'16"W	350.42'
3	1	S82°50'14"E	499.11'

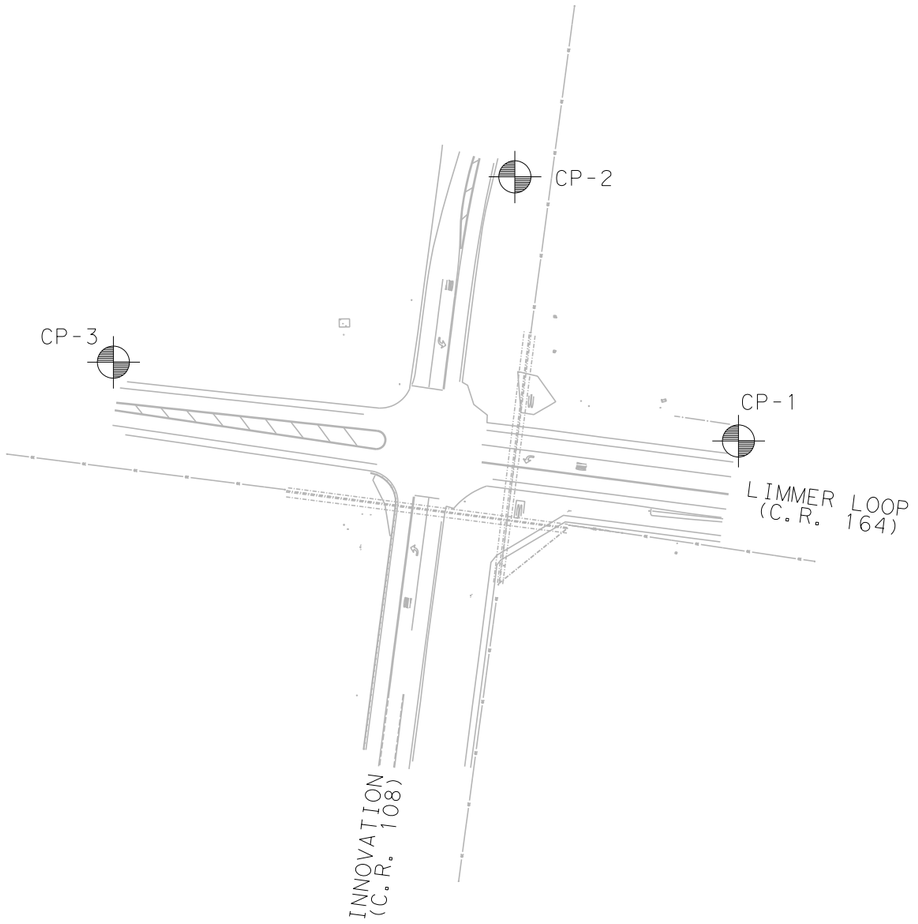

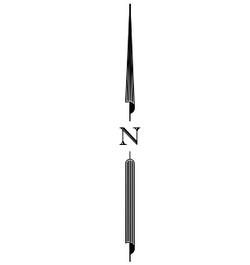

1" = 60' (17"X11")
1" = 30' (34"X22")
WILLIAMSON COUNTY, TEXAS

SURVEY CONTROL POINTS - GRID COORDINATES				
PNT	NORTHING	EASTING	ELEV.	DESCRIPTION
1	10,177,729.44	3,166,212.29	698.13'	5/8"IR W/ALUMINUM SAM CONTROL CAP IN CONCRETE
2	10,177,938.57	3,166,035.19	702.43'	5/8"IR W/ALUMINUM SAM CONTROL CAP IN CONCRETE
3	10,177,791.81	3,165,717.26	691.99'	5/8"IR W/ALUMINUM SAM CONTROL CAP IN CONCRETE

SURVEY CONTROL POINTS - SURFACE COORDINATES				
PNT	NORTHING	EASTING	ELEV.	DESCRIPTION
1	10,178,950.77	3,166,592.23	698.13'	5/8"IR W/ALUMINUM SAM CONTROL CAP IN CONCRETE
2	10,179,159.96	3,166,415.13	702.43'	5/8"IR W/ALUMINUM SAM CONTROL CAP IN CONCRETE
3	10,179,013.18	3,166,097.16	691.99'	5/8"IR W/ALUMINUM SAM CONTROL CAP IN CONCRETE

NOTES:

1. ALL COORDINATES SHOWN HEREON ARE BASED ON THE TEXAS COORDINATE SYSTEM, CENTRAL ZONE (4203), NAD 83, 2011 ADJUSTMENT (EPOCH 2010.00) / NAVD 88, GEOID 18. ALL COORDINATES SHOWN HEREON ARE SURFACE AND MAY BE CONVERTED TO GRID BY DIVIDING BY A SURFACE ADJUSTMENT FACTOR OF 1.00012. UNITS: U.S. SURVEY FEET

2. CONTROL POINTS SHOWN HEREON WERE SET BY SAM, LLC ON JANUARY 9, 2024 USING STATIC AND GPS OBSERVATIONS PROCESSED TO CORS STATIONS SAM2, TXBT AND TXC2.

3. A CALIBRATION SHOULD BE PERFORMED WHEN USING THE CONTROL SHOWN HEREON.

FILE:J:\023080985\100\Survey\02Base\DGN\Control\980858LLimmer Loop Control Layout.dgn

STATE OF TEXAS
REGISTERED
DONALD J. ZDANCEWICZ
6687
PROFESSIONAL
LAND SURVEYOR

5/2/2024

Survey Date: January, 2024

SAM
4801 Southwest Parkway
Building Two, Suite 100
Austin, Texas 78735
(512) 447-0575
Fax: (512) 326-3029
Texas Firm Registration No. 10064300

CITY OF HUTTO

TRAFFIC SIGNAL
INNOVATION AT LIMMER LOOP
CONTROL LAYOUT SHEET

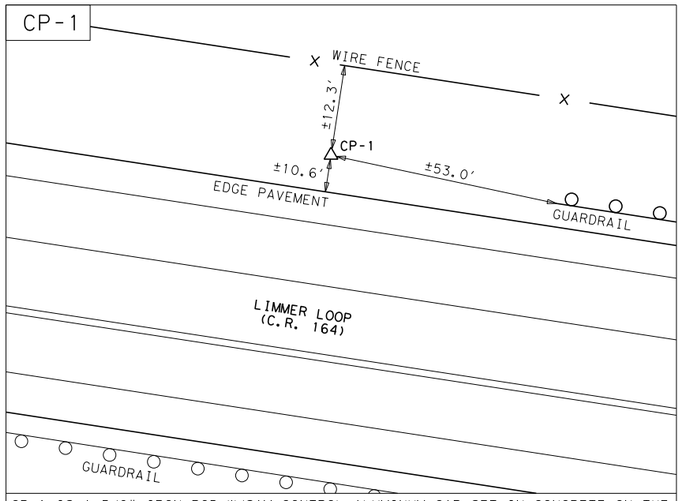

CP-1 IS A 5/8" IRON ROD W/SAM CONTROL ALUMINUM CAP SET IN CONCRETE ON THE NORTH SIDE OF LIMMER LOOP (C.R. 164), APPROXIMATELY 223.5 FEET EAST OF THE INTERSECTION OF LIMMER LOOP (C.R. 164) AND INNOVATION (C.R. 108), ±12.3 FEET SOUTHWEST OF A WIRE FENCE, ±53.0 FEET WEST OF A GUARDRAIL END, AND ±10.6 FEET NORTHEAST OF THE LIMMER LOOP (C.R. 164) EDGE OF PAVEMENT.

SURFACE COORDINATES	GRID COORDINATES
N = 10,178,950.77	N = 10,177,729.44
E = 3,166,592.23	E = 3,166,212.29
ELEV. = 698.13'	ELEV. = 698.13'

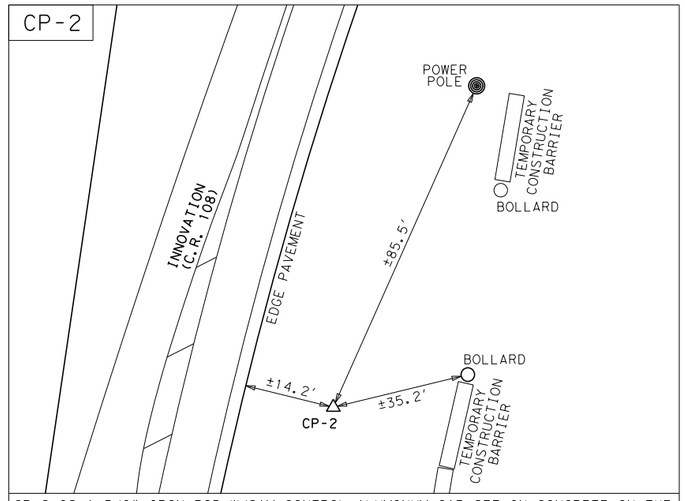

CP-2 IS A 5/8" IRON ROD W/SAM CONTROL ALUMINUM CAP SET IN CONCRETE ON THE EAST SIDE OF INNOVATION (C.R. 108), APPROXIMATELY 193 FEET NORTH OF THE INTERSECTION OF INNOVATION (C.R. 108) AND LIMMER LOOP (C.R. 164), ±85.5 FEET SOUTHWEST OF A POWER POLE, ±35.2 FEET WEST OF A BOLLARD, AND ±14.2 FEET EAST OF THE INNOVATION (C.R. 106) EDGE OF PAVEMENT.

SURFACE COORDINATES	GRID COORDINATES
N = 10,179,159.96	N = 10,177,938.57
E = 3,166,415.13	E = 3,166,035.19
ELEV. = 702.43'	ELEV. = 702.43'

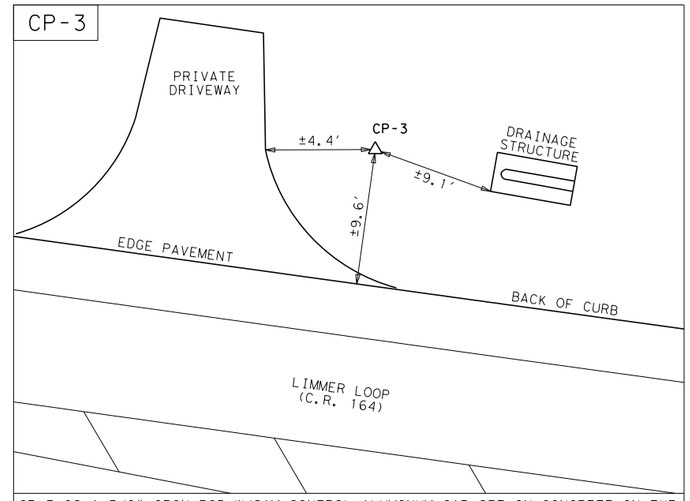

CP-3 IS A 5/8" IRON ROD W/SAM CONTROL ALUMINUM CAP SET IN CONCRETE ON THE NORTH SIDE OF LIMMER LOOP (C.R. 164), APPROXIMATELY 234 FEET WEST OF THE INTERSECTION OF LIMMER LOOP (C.R. 164) AND INNOVATION (C.R. 108), ±9.1 FEET WEST OF A DRAINAGE STRUCTIRE, ±9.6 FEET NORTH OF THE LIMMER LOOP (C.R. 164) EDGE OF PAVEMENT, AND ±4.4 FEET EAST OF PRIVATE DRIVEWAY.

SURFACE COORDINATES	GRID COORDINATES
N = 10,179,013.18	N = 10,177,791.81
E = 3,166,097.16	E = 3,165,717.26
ELEV. = 691.99'	ELEV. = 691.99'

NOTES:

1. ALL COORDINATES SHOWN HEREON ARE BASED ON THE TEXAS COORDINATE SYSTEM, CENTRAL ZONE (4203), NAD 83, 2011 ADJUSTMENT (EPOCH 2010.00) / NAVD 88, GEOID 18. ALL COORDINATES SHOWN HEREON ARE SURFACE AND MAY BE CONVERTED TO GRID BY DIVIDING BY A SURFACE ADJUSTMENT FACTOR OF 1.00012.
UNITS: U.S. SURVEY FEET

2. CONTROL POINTS SHOWN HEREON WERE SET BY SAM, LLC ON JANUARY 9, 2024 USING STATIC AND GPS OBSERVATIONS PROCESSED TO CORS STATIONS SAM2, TXBT AND TXC2.

3. A CALIBRATION SHOULD BE PERFORMED WHEN USING THE CONTROL SHOWN HEREON.



NOT TO SCALE

STATE OF TEXAS
REGISTERED
DONALD J. ZDANCEWICZ
6687
PROFESSIONAL
LAND SURVEYOR

5/2/2024

Survey Date: January, 2024

SAM
4801 Southwest Parkway
Building Two, Suite 100
Austin, Texas 78735
(512) 447-0575
Fax: (512) 326-3029
Texas Firm Registration No. 10064300

CITY OF HUTTO

TRAFFIC SIGNAL
INNOVATION AT LIMMER LOOP
HORIZONTAL & VERTICAL
CONTROL SHEET

CITY OF HUTTO
TRAFFIC SIGNAL INNOVATION AT LIMMER LOOP
SUE - QUALITY LEVEL B INVESTIGATION
WILLIAMSON COUNTY, TX



SUE LEGEND

- END OF INFORMATION
- FIBER OPTIC HANDHOLE
- FOMP FIBER OPTIC MARKER POST
- FIRE HYDRANT
- GMP GAS MARKER POST
- GAS TEST STATION
- TMP TELEPHONE MARKER POST
- TELEPHONE PEDESTAL
- UTILITY CONTINUES
- WW WASTEWATER MANHOLE
- WATER TEST STATION
- WATER VALVE

PROJECT LIMITS

LINE	TYPE	OWNER	RECORDS RECEIVED	DATE RECEIVED
FO	FIBER OPTIC	BRIGHTSPEED	YES	01/03/2024
G	GAS	ENTERPRISE	YES	01/03/2024
TUG	TELECOM	BRIGHTSPEED	YES	01/03/2024
UNK	UNKNOWN	UNKNOWN	N/A	N/A
WW	WASTEWATER	CITY OF HUTTO	YES	12/28/2023
W	WATER	CITY OF HUTTO	YES	12/28/2023
W1	WATER	JONAH WATER SUD	YES	01/08/2024

ALL UTILITY INFORMATION HEREON IS DEPICTED TO QUALITY LEVEL "B" UNLESS OTHERWISE NOTED.SIZE INFORMATION SHOWN HEREON IS TAKEN FROM AVAILABLE UTILITY RECORDS.

ABBREVIATIONS:

QL–C	DEPICTED ACCORDING TO EXISTING ASSOCIATED UTILITY STRUCTURES. NO ELECTRONIC INFORMATION WAS OBTAINED.
QL–D	DEPICTED ACCORDING TO RECORD INFORMATION. NO ELECTRONIC INFORMATION WAS OBTAINED.
(F.O.)	FIBER OPTIC
(AATFI)	ABANDONED ACCORDING TO FIELD INFORMATION.
(AATUR)	ABANDONED ACCORDING TO UTILITY RECORDS.
(EATFI)	EMPTY ACCORDING TO FIELD INFORMATION.
(EATUR)	EMPTY ACCORDING TO UTILITY RECORDS. UTILITY END POINT.
EOI(EORI)	END OF ELECTRONIC DESIGNATING INFORMATION (END OF RECORD INFORMATION) UNLESS OTHERWISE NOTED, UTILITY LINE LIMITS DEPICTED REPRESENT FIELD DESIGNATING LIMITS AND NOT END POINTS OF UTILITIES.
EMDR	ELECTROMAGNETIC DEPTH READING

UTILITY INFORMATION LABELED QL–C OR QL–D IS DERIVED FROM FURNISHED RECORDS. SUCH INFORMATION MAY NOT BE ACCURATE OR RELIABLE. SAM, LLC. EXPRESSLY DISCLAIMS RESPONSIBILITY FOR THE ACCURACY OR RELIABILITY OF UTILITY INFORMATION DEPICTED ACCORDING TO RECORDS.

GENERAL NOTES:

1. THE HORIZONTAL LOCATION OF UTILITIES SHOWN ON THESE DRAWINGS IS ARRIVED AT BY THE USE OF DESIGNATING EQUIPMENT. THESE LINES WERE NOT UNCOVERED TO VERIFY EXACT HORIZONTAL LOCATIONS.
2. THE ACCURACY OF THE HORIZONTAL LOCATION OF UTILITY LINES SHOWN ON THESE PLANS CAN BE INFLUENCED BY FACTORS BEYOND SAM, LLC. CONTROL, SUCH AS CONDUCTIVITY OF MATERIALS AND THEIR SURROUNDINGS, SOIL MOISTURE CONTENT, PROXIMITY OF OTHER UNDERGROUND UTILITIES OR STRUCTURES, DEPTH OF UTILITY, ETC. THEREFORE, ONLY THE ACCURACY OBTAINED BY ACTUAL EXCAVATION CAN BE GUARANTEED TO APPLICABLE ENGINEERING AND/OR SURVEYING STANDARDS.
3. AS–BUILT DRAWINGS WERE USED TO COMPARE DESIGNATED LOCATIONS TO CONSTRUCTION AS–BUILT LOCATIONS.
4. THE USE OF THE HORIZONTAL LOCATIONS OF THE UTILITIES SHOWN ON THESE PLANS DOES NOT RELIEVE THE CONTRACTOR FROM THE DUTY TO COMPLY WITH APPLICABLE UTILITY DAMAGE PREVENTION LAWS AND REGULATIONS, INCLUDING, BUT NOT LIMITED TO, GIVING NOTIFICATION TO UTILITY OWNER'S "ONE–CALL" CENTERS BEFORE EXCAVATION.
5. HORIZONTAL DATUM- UNITED STATES/STATE PLANE 1983, TEXAS CENTRAL 4203, U.S. SURVEY FEET. UTILIZING TRIMBLE R10 GNSS RECEIVERS AND TRIMBLE BUSINESS CENTER SOFTWARE. VERTICAL DATUM: NAVD 88, GEOID 18, U.S. SURVEY FEET.
6. ELECTROMAGNETIC DEPTHS (IF SHOWN) WERE TAKEN BY ELECTRONIC MEANS AND ARE APPROXIMATE. THE DEPTHS REPRESENT DISTANCE FROM GROUND SURFACE TO CENTER OF PIPE/CABLE. SAM, LLC. CANNOT WARRANT THE ACCURACY OF ELECTRONIC DEPTH READINGS SHOWN HEREON.
7. THE FOLLOWING COMPANIES HAVE NOT SUPPLIED RECORDS AS OF 01–19–2024
   - AT&T
   - ONCOR ELECTRIC DISTRIBUTION
8. THE FOLLOWING COMPANIES HAVE SUPPLIED RECORDS AND ARE CLEAR OF THE PROJECT SITE AS OF 01–19–2024
   - CITY OF HUTTO

SPECIAL NOTES:

1. SAM LLC IDENTIFIED MULTIPLE WATER STRUCTURES, HOWEVER WAS UNABLE TO PRODUCE AN ELECTROMAGNETIC SIGNAL ON THE ASSOCIATED 16" WATER LINE.
2. SAM LLC DISCOVERED AN UNKNOWN LINE IN THE FIELD, HOWEVER WAS UNABLE TO TRACE IT TO A STRUCTURE TO IDENTIFY THE UTILITY.
3. SAM LLC DISCOVERED A SECOND 18IN LINE HEADING EAST WITHIN WASTEWATER MANHOLE 2. HOWEVER, DUE TO THE DEPTH OF THE FLOWLINE, SAM LLC WAS UNABLE TO ROD IT TO VERIFY IT'S PATH NOR IDENTIFY A CORRESPONDING STRUCTURE IN RELATION TO IT.

SAM™
4801 Southwest Parkway
Building Two, Suite 100
Austin, Texas 78735
Ofc: 512.447.0575
Fax: 512.326.3029
email: info@sam.biz
Texas Firm Registration No. F–1937

TRAFFIC SIGNAL
INNOVATION AT LIMMER LOOP
SUE QL–B
WILLIAMSON COUNTY, TX

NO.	REVISIONS	BY	DATE

PROJECT:	CITY OF HUTTO – TRAFFIC SIGNAL INNOVATION AT LIMMER LOOP
JOB NUMBER:	1023080985B
DATE:	01/19/2024
SCALE:	1"=30'
PROJ.MANAGER:	JOHN SCHROEDER
TECHNICIAN:	MELISSA MARTINEZ
DRAWING:	80985B_LimmerLoop_SUE.DWG
FIELDNOTES:	N/A
DESIGNATOR:	JOSE MARES
FIELDBOOKS:	N/A

I CERTIFY THE UTILITY INFORMATION SHOWN ON THESE DRAWINGS IS IN ACCORDANCE WITH CI/ASCE STANDARD 38–22

STATE OF TEXAS
JOHN D. SCHROEDER
147945
LICENSED PROFESSIONAL ENGINEER
01-19-2024

JOHN D. SCHROEDER P.E. 147945 DATE

GRAPHIC SCALE
1"=30'

SHEET 1
OF 1

PLAT No. 1023080985B

01/19/2024

NOTES:

1. THE CONTRACTOR SHALL VERIFY ALL EXISTING UNDERGROUND AND AERIAL UTILITY LOCATIONS PRIOR TO THE INSTALLATION OF SIGNAL POLE FOUNDATIONS.
2. MINIMUM CLEARANCE OF 40" RADIUS FROM NEUTRAL AND 10' RADIUS FROM PRIMARY SHALL BE MAINTAINED BETWEEN PROPOSED TRAFFIC SIGNAL EQUIPMENT AND EXISTING OVERHEAD ELECTRIC LINES.
3. THE CONTRACTOR SHALL PROVIDE CONTROLLER CABINET, BBU, REGULATORY SIGNS, AND STREET NAME BLADES. ALL SIGNS ARE TO BE INSTALLED BY CONTRACTOR. PAYMENT FOR INSTALLATION IS SUBSIDIARY TO ITEM 680.
4. THE CONTRACTOR SHALL MAINTAIN TRAFFIC OPERATIONS AT ALL TIMES IN COMPLIANCE WITH THE CURRENT TMUTCD.
5. NEATLY CAP/COIL ALL SPARE WIRES OR CABLES FOR FUTURE CONNECTION IN GROUND BOX OR AT TERMINATION.
6. SIGNAL OPERATION SHALL BE MONITORED AFTER CONSTRUCTION AND MODIFIED IF NECESSARY TO FACILITATE SAFE OPERATIONS.
7. ALL SIGNAL HEADS SHALL HAVE BACK PLATES.
8. ALL SIGN ASSEMBLIES SHALL BE IN ACCORDANCE WITH THE TMUTCD.
9. AN OFF-DUTY UNIFORMED POLICE OFFICER IS REQUIRED TO CONTROL TRAFFIC PRIOR TO TURNING OFF/ON THE INTERSECTION TRAFFIC SIGNAL CONTROL AND UNTIL THE TRAFFIC SIGNAL IS BACK TO SATISFACTORY OPERATION.

NOTES (CONT'D):

10. CONTRACTOR SHALL PROTECT ALL PERMANENT EQUIPMENT AND POLES FOR USE WITH THE SIGNAL THROUGHOUT THE DURATION OF THE PROJECT.
11. THE CONTRACTOR SHALL RESTORE, AT THEIR EXPENSE, EQUIPMENT DISTRUBED OR DAMAGED AREAS AS A RESULT OF CONSTRUCTION (AS DETERMINED BY THE ENGINEER) TO A CONDITION AS GOOD AS OR BETTER THAN THAT PRESENT PRIOR TO THE BEGINNING OF THIS PROJECT.
12. THE CONTRACTOR SHALL COVER TRAFFIC SIGNAL HEADS WHEN NOT IN USE.
13. POLE FOUNDATIONS SHALL BE ADJUSTED IN THE FIELD (AS APPROVED BY THE ENGINEER) IN ORDER TO MEET CLEARANCES.
14. SEE TRAFFIC SIGNAL POLE STANDARDS FOR INSTALLATION ALIGNMENT AND DETAIL.
15. SOLDER CABLES AT THE TERMINAL BLOCK. JUNCTION BOX MUST BE WEATHER-PROOF.

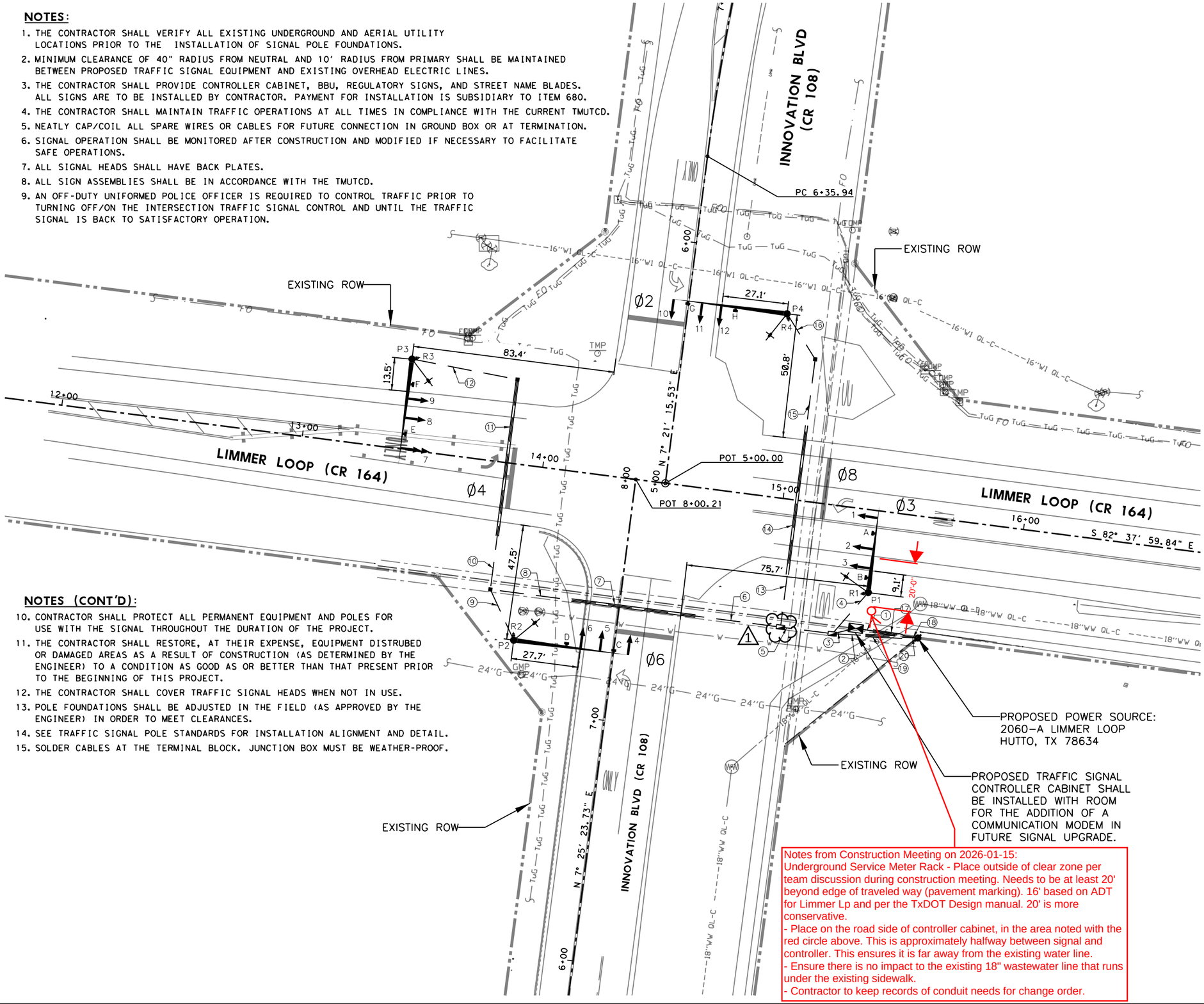

HORZ 0' 20' 40'
SCALE IN FEET

- PROPOSED MAST ARM (WITH SIGNAL POLE)
- PROPOSED 3-SECTION TRAFFIC SIGNAL HEAD
- PROPOSED 4-SECTION TRAFFIC SIGNAL HEAD
- SIGNAGE ON MAST ARM OR POLE
- PROPOSEED TRAF SIG CONTROLLER W/ BBU
- PROPOSED LUMINAIRE (LED) 250W EQ
- PROPOSED GROUND BOX TYPE A W/ APRON
- PROPOSED GROUND BOX TYPE D W/ APRON
- PROPOSED CONDUIT RUN (TRENCH)
- PROPOSED CONDUIT RUN (BORED)
- (1) CONDUIT RUN NUMBER
- PROPOSED POWER SOURCE

STATE OF TEXAS
MATTHEW WOLNIAK
LICENSED
PROFESSIONAL ENGINEER

8/26/2025

NO.	REVISION	BY	DATE
1	REVISED GROUND BOX TYPE	GIF	8/26/25

CITY OF HUTTO

JMT
TBPE FIRM REG. NO. F-16341

CITY OF HUTTO
TRAFFIC SIGNAL PROJECT
LIMMER LOOP AND INNOVATION BLVD

LIMMER LOOP AND INNOVATION BLVD TRAFFIC SIGNAL INSTALLATION PLAN

SCALE 1" = 40'

(C) 2024	STATE	CITY	COUNTY	SHEET NO.
	TEXAS	HUTTO	WILLIAMSON	27

FILENAME: pw:\\jmt-pw.bentley.com:jmt-pw-01\Documents\Projects\2022\22-01219-001\Design\4 - Design\Plan Set\8. Traffic\HUTTO*TSIG*01

DRAWING DATE: 8/26/2025

TRAFFIC SIGNAL POLE SCHEDULE & PLACEMENT

POLE NUMBER	DESCRIPTION	CL	STATION	OFFSET
P1	PROP STEEL POLE W/ 36' MA & LUM (30' TALL)	LL	15+40	34' RT
P2	PROP STEEL POLE W/ 48' MA & LUM (30' TALL)	LL	13+97	72' RT
P3	PROP STEEL POLE W/ 44' MA & LUM (30' TALL)	LL	13+41	37' LT
P4	PROP STEEL POLE W/ 48' MA & LUM (30' TALL)	LL	14+92	76' LT

NOTE: ALL STATIONS AND OFFSETS BASED ON CENTERLINE (CL) OF LIMMER LOOP (CR 164) (LL)

PROPOSED VEHICLE SIGNAL HEADS

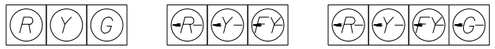

2, 3, 5, 6, 8, 9, 11, 12 | 1, 4, 10 | 7

R10-17T
36"X42"



A, C, E, G

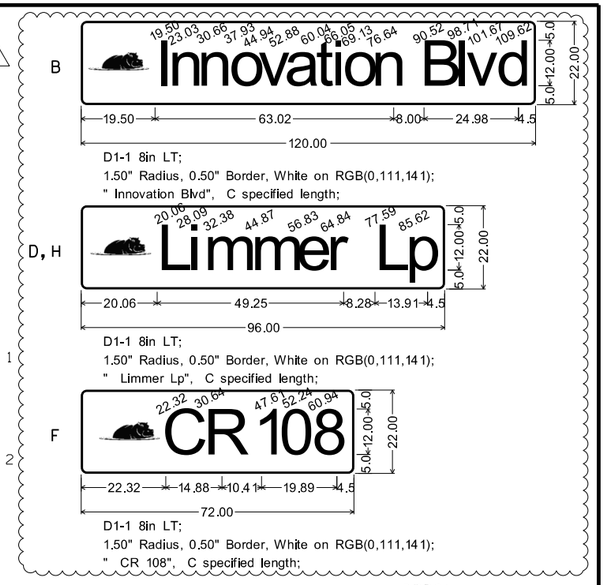

TRAFFIC SIGNAL HEAD PLACEMENT (FT)

POLE NUMBER	A	B	C	D	E	NO. OF HEADS	LUM ARM (EA)	FND TYPE
P1	13	8	10	36	30	3	1	36-A
P2	12	8	28	48	30	3	1	36-A
P3	12	8	16	44	30	3	1	36-A
P4	12	8	28	48	30	3	1	36-A

RADAR DETECTION ZONE DETAILS

RADAR UNIT	MOUNTING LOCATION	MOUNTING HEIGHT	DETECTION ZONE
R1	P1	20'	UP TO 60' FROM STOP BAR PH8
R2	P2	20'	UP TO 60' FROM STOP BAR PH6
R3	P3	20'	UP TO 60' FROM STOP BAR PH4
R4	P4	20'	UP TO 60' FROM STOP BAR PH2

PROPOSED PHASING DIAGRAM

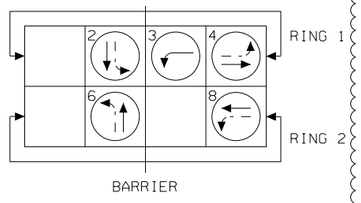

SIGNAL POLE DIMENSIONS

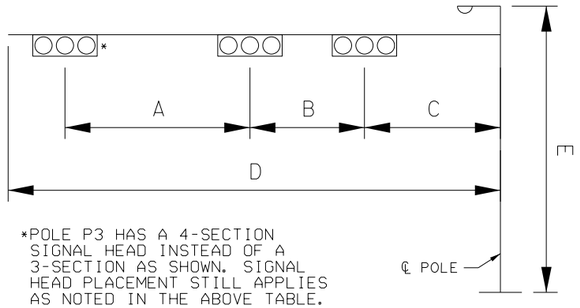

*POLE P3 HAS A 4-SECTION SIGNAL HEAD INSTEAD OF A 3-SECTION AS SHOWN. SIGNAL HEAD PLACEMENT STILL APPLIES AS NOTED IN THE ABOVE TABLE.

ELECTRICAL SCHEDULE

ITEM	DESCRIPTION	1	2	3	4	5	6	7	8	9	10	11	12	13	14	15	16	17	18	19	20
RUN LENGTH (FT)		4	12	5	22	20	35	52	33	24	22	65	45	21	63	27	23	13	5	15	6
SIGNAL POWER	1/C-#6 XHHW 1 3																	1	1		
GROUND	#8 BARE		4		1	3	2	2	2	1	1	1	1	1	1	1	1			4	4
VEHICLE SIGNAL	7/C-#14 AWG			12	3	9	6	6	6	3	3	3	3	3	3	3	3				
RAD DET POWER	7/C-#14 AWG			4	1	3	2	2	2	1	1	1	1	1	1	1	1				
LUM POWER	1/C-#8 XHHW		4		1	3	2	2	2	1	1	1	1	1	1	1	1			4	4
CONDUITS	2" PVC (TRENCHED)	1			1					1			1				1		1		
	2" PVC (BORED)																	1			
	3" PVC (TRENCHED)		2	3	2	3	3		3	2	3		2	3		3	2				2
	3" PVC (BORED)							3				3			3				2		

CABLE INSIDE POLE

POLE NO.	NO. 8 XHHW	14 AWG 7 CNDR
P1	30	109
P2	30	144
P3	30	120
P4	30	144

CABLE TERMINATION CHART

COND. COLOR	CABLE 1 SH 1 TO CONTRL 7 CONDR	CABLE 2 SH 2, 3 TO CONTRL 7 CONDR	CABLE 3 SH 4 TO CONTRL 7 CONDR	CABLE 4 SH 5, 6 TO CONTRL 7 CONDR	CABLE 5 SH 7 TO CONTRL 7 CONDR	CABLE 6 SH 8, 9 TO CONTRL 7 CONDR	CABLE 7 SH 10 TO CONTRL 7 CONDR	CABLE 8 SH 11, 12 TO CONTRL 7 CONDR
BLACK	SPARE	SPARE	SPARE	SPARE	SPARE	SPARE	SPARE	SPARE
WHITE	S. COMMON	S. COMMON	S. COMMON	S. COMMON	S. COMMON	S. COMMON	S. COMMON	S. COMMON
RED	SH 1 Ø4 R ARROW	SH 2, 3 Ø4 R	SH 4 Ø2 R ARROW	SH 5, 6 Ø2 R	SH 7 Ø3 R ARROW	SH 8, 9 Ø8 R	SH 10 Ø6 R ARROW	SH 11, 12 Ø6 R
GREEN	SH 1 Ø4 FY ARROW	SH 2, 3 Ø4 G	SH 4 Ø2 FY ARROW	SH 5, 6 Ø2 G	SH 7 Ø3 G ARROW	SH 8, 9 Ø8 G	SH 10 Ø6 FY ARROW	SH 11, 12 Ø6 G
ORANGE	SH 1 Ø4 Y ARROW	SH 2, 3 Ø4 Y	SH 4 Ø2 Y ARROW	SH 5, 6 Ø2 Y	SH 7 Ø3 Y ARROW	SH 8, 9 Ø8 Y	SH 10 Ø6 Y ARROW	SH 11, 12 Ø6 Y
BLUE	SPARE	SPARE	SPARE	SPARE	SH 7 Ø3 FY ARROW	SPARE	SPARE	SPARE
WHITE/BLACK	SPARE	SPARE	SPARE	SPARE	SPARE	SPARE	SPARE	SPARE

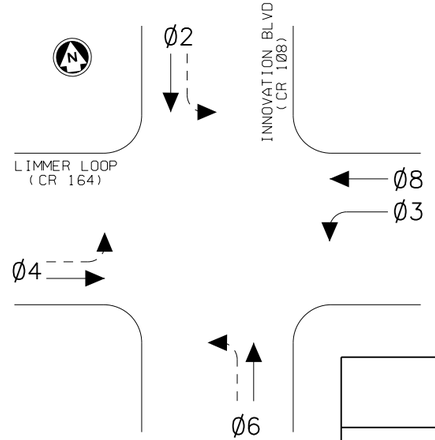

MAST ARM MOUNTED SIGN SUMMARY

POLE	SIGN LABEL	SIGN ID	LEGEND
P1	A	R10-17T	LEFT TURN YIELD ON FLASHING YELLOW ARROW
P1	B	D1-1	Innovation Blvd 3
P2	C	R10-17T	LEFT TURN YIELD ON FLASHING YELLOW ARROW
P2	D	D1-1	Limmer Lp
P3	E	R10-17T	LEFT TURN YIELD ON FLASHING YELLOW ARROW
P3	F	D1-1	CR 108
P4	G	R10-17T	LEFT TURN YIELD ON FLASHING YELLOW ARROW
P4	H	D1-1	Limmer Lp

ELECTRICAL SERVICE DATA

ELECTRICAL SERVICE DESCRIPTION (SEE ED(4))	SERVICE CONDUIT SIZE (RMC)	SERVICE CONDUCTORS NO./SIZE	SAFTEY SWITCH AMPS	MAIN DISCONNECT CKT. BRK. POLE/AMP	TWO-POLE CONTACTOR AMPS ***	PANELBD./ LOADCENTER AMP RATING (MIN)	CIRCUIT NO.	BRANCH CKT. BRL. POLE/AMPS	KVA LOAD
TY D (120/240) 070 (NS) AL (E) EX (O)	2" 1	3/#6	N/A	2P/70	30	100	T.S. Lighting ILSN	1P/50 1P/15 1P/15	<7.1

1

*ELECTRICAL SERVICE DATA TO BE CONFIRMED BY THE POWER COMPANY PRIOR TO INSTALLATION.
**ELECTRICAL POWER SOURCE IS LOCATED AT 2060-A LIMMER LOOP, HUTTO, TX 78634

3 1/30/2026 - REVISED ILSN STREET SIGNS

1 2/12/2025 - REMOVED OPTICOM NOTES; CLARIFIED PAINT COLORS; REVISED CONTROLLER AND ILSN NOTES; REVISIONS TO SIGNAL DETAIL SHEET.

STATE OF TEXAS
ELLIOT R. CUDE
131513
LICENSED
PROFESSIONAL ENGINEER
1/30/2026
FOR REVISION 3 ONLY

STATE OF TEXAS
MATTHEW WOLNIAK
128684
LICENSED
PROFESSIONAL ENGINEER
2/12/2025

CITY OF HUTTO

JMT
TBPE FIRM REG. NO. F-16341

CITY OF HUTTO
TRAFFIC SIGNAL PROJECT
LIMMER LOOP AND INNOVATION BLVD

LIMMER LOOP AND INNOVATION BLVD TRAFFIC SIGNAL INSTALLATION PLAN DETAIL SHEET

(C) 2024	STATE	CITY	COUNTY	SHEET NO.
	TEXAS	HUTTO	WILLIAMSON	28

FILENAME: c:\pwworking\jmt\d0855166\HUTTO+TSIG+02.dgn
DRAWING DATE: 1/30/2026

DISCLAIMER:
The use of this standard is governed by the "Texas Engineering Practice Act". No warranty of any kind is made by TxDOT for any purpose whatsoever. TxDOT assumes no responsibility for the conversion of this Standard to other formats or for incorrect results or damages resulting from its use.

DATE: 1/9/2025
FILE: pw:\\jmt-pw.bentley.com:jmt-pw-01\Documents\Projects\2022\22-01219-001\Design\4 - Design\Plan Set\8. Traffic\Signal Standards\cfa.dgn

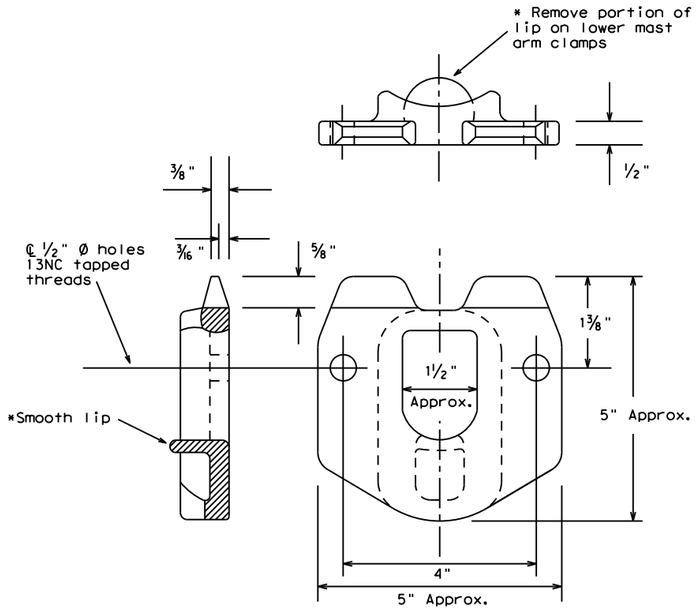

POLE SIMPLEX DETAILS

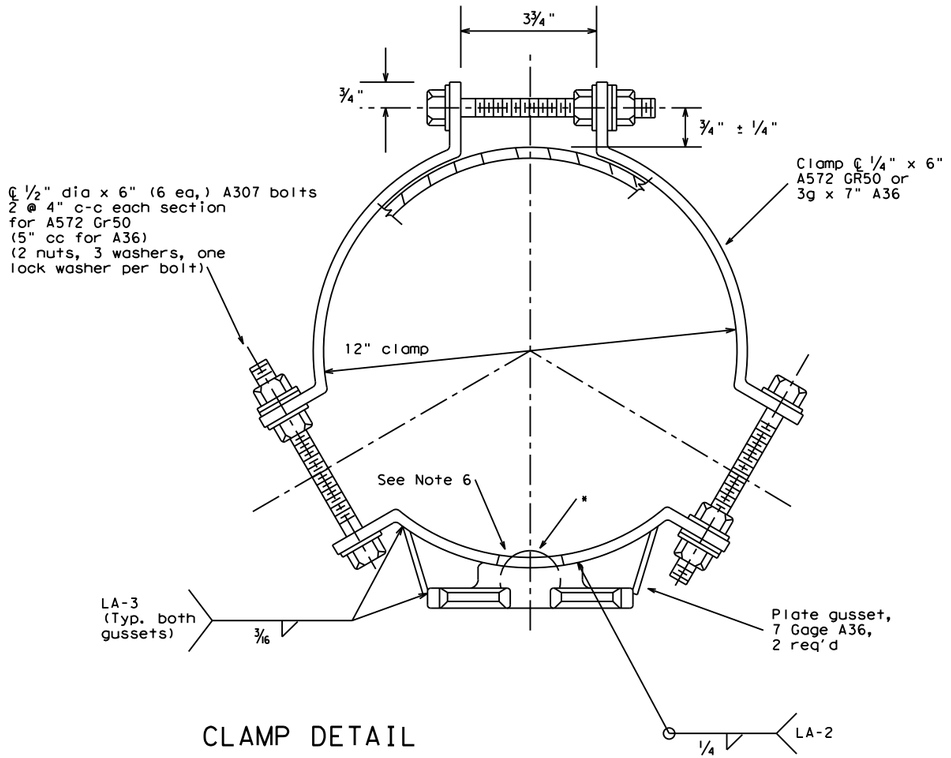

CLAMP DETAIL

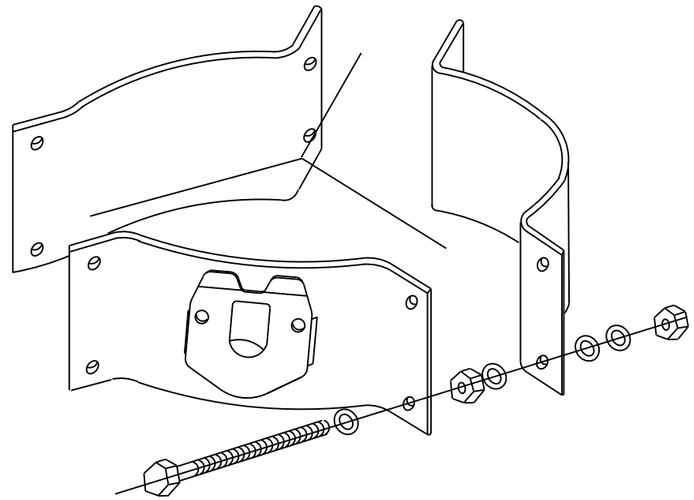

PROJECTION

OTHER MATERIALS:

1. Pole simplex shall be ASTM A27 GR65-35 or A148 GR80-50 or A576 GR1021. ASTM A576 must be suitable for forging and also meet minimum tensile of 65ksi, minimum yield of 35ksi, and a minimum elongation of 22 percent in 2 inches.
2. Welded tabs and backplates shall be ASTM A-36 steel or better.
3. Nylon insert locknuts shall conform to ASTM A563.

GENERAL NOTES:

1. Materials and fabrication shall be in accordance with Standard Sheet "MA-C" and with the details, dimensions, and weld procedures shown herein. Weld references call for preapproved weld procedures which the Fabricator must obtain prior to fabrication. In the absence of specified fabrication tolerances, dimensions shall be within the tolerances generally obtainable in normal fabrication practice.
2. All parts shall be galvanized after fabrication in accordance with Item 445, "Galvanizing". The throat of the Simplex shall be made free of all rough or sharp edges resulting from the galvanizing process.
3. Each simplex fitting shall be supplied with 2 ASTM A325 bolts, ½in. X 1½in. and 2 lock washers. The bolts and lock washers shall be secured to the clamp with the other hardware items. The Fabricator shall ship clamp assembly together in a single package, including all bolts, nuts, and washers required for the clamp and simplex fitting.
4. Design conforms to 1994 AASHTO "Standard Specifications for Structural Supports for Highway Signs, Luminaires, and Traffic Signals" and interim revisions thereto. Design Wind Speed equals 80 mph plus a 1.3 gust factor. Clamps are designed to support a 60 lb. luminaire having an effective projected area (actual area times drag coefficient) of 1.6 sq.ft.,12 ft. maximum arm length.
5. Each assembly shall consist of one upper piece simplex fitting having a smooth lip and one lower piece simplex fitting with the lip removed.
6. Approximately 2 in. diameter hole in upper mast arm clamp.

For 8.9 - 12 inch diameter Signal Poles
(Two req'd for each mast arm)

Texas Department of Transportation
Traffic Operations Division

CLAMP ON FITTING ASSEMBLY FOR LUMINAIRE MAST ARM

CFA-12

©TxDOT	DN: KAB	CK: RES	DW: FDN	CK: CAL
REVISIONS	CONT	SECT	JOB	HIGHWAY
11-99 1-12				
	DIST	COUNTY		SHEET NO.
		WILLIAMSON		29

130

DISCLAIMER:
The use of this standard is governed by the "Texas Engineering Practice Act". No warranty of any kind is made by TxDOT for any purpose whatsoever. TxDOT assumes no responsibility for the conversion of this standard to other formats or for incorrect results or damages resulting from its use.

DATE: 1/9/2025
FILE: pw:\\jmt-pw.bentley.com:jmt-pw-01\Documents\Projects\2022\22-01219-00\Design\...

GENERAL NOTES FOR ALL ELECTRICAL WORK

1. The location of all conduits, junction boxes, ground boxes, and electrical services is diagrammatic and may be shifted to accommodate field conditions.

2. Provide new and unused materials. Ensure that all materials and installations comply with the applicable articles of the National Electrical Code (NEC), TxDOT standards and specifications, National Electrical Manufacturers Association (NEMA), and are listed by Underwriters Laboratories (UL) or a Nationally Recognized Testing Lab (NRTL). NRTLs such as Canadian Standard Association (CSA), Intertek Testing Services NA Inc., or FM Approvals LLC can be considered equivalent to UL. Where reference is made to NEMA listed devices, International Electrotechnical Commission (IEC) listed devices will not be considered an acceptable equal to a NEMA listed device. Acceptable devices may have both a NEMA and IEC listing. Faulty fabrication or poor workmanship in any material, equipment, or installation is justification for rejection. Replace or reinstall rejected material or equipment at no additional cost to the Department.

3. Miscellaneous nuts, bolts and hardware, except for high strength bolts, may be stainless steel when plans specify galvanized, provided the bolt size is ½ in. or less in diameter.

4. Provide the following test equipment as required by the Engineer to confirm compliance with the contract and the NEC: voltmeter, ammeter, megohm meter (1000 volt DC), ground resistance tester, torque wrenches, and torque screwdrivers. Ensure all equipment has been properly calibrated within the last year. Provide calibration certification to the Engineer upon request. Operate test equipment during inspection as requested by the Engineer.

5. Install grounding as shown on the plans and in accordance with the NEC. Ensure all metallic conduits; metal poles; luminaires; and metal enclosures are bonded to the equipment grounding conductor. Provide stranded bare copper or green insulated grounding conductors. Ground rods, connectors, and bonding jumpers are subsidiary to the various bid items.

6. When required by the Engineer, notify the Department in writing of materials from the Material Producers List (MPL) intended for use on each project. Prequalified materials are listed on the MPL on TxDOT's website under "Roadway Illumination and Electrical Supplies." No substitutions will be allowed for materials on this list.

CONDUIT

A. MATERIALS

1. Provide conduit, junction boxes, fittings, and hardware as per TxDOT Departmental Material Specification (DMS) 11030 "Conduit" and Item 618 "Conduit" of TxDOT's "Standard Specifications For Construction And Maintenance Of Highways, Streets, And Bridges," latest edition. Provide conduits listed under Item 618 on the MPL under "Roadway Illumination and Electrical Supplies." Provide conduit types according to the descriptive code or as shown on the plans. Do not substitute other types of conduits for those shown. Provide liquidtight flexible metal conduit (LFMC) when flexible conduit is called for on galvanized steel rigid metallic conduit (RMC) systems. Provide liquidtight flexible nonmetallic conduit (LFNC) when flexible conduit is called for on polyvinyl chloride (PVC) systems.

2. Provide galvanized steel RMC for all exposed conduits, unless otherwise shown on the plans. Properly bond all metal conduits.

3. Unless otherwise shown on the plans, provide junction boxes with a minimum size as shown in the following table, which applies to the greatest number of conductors entering the box through one conduit with no more than four conduits per box. When a mixture of conductor sizes is present, count the conductors as if all are of the larger size. For situations not applicable to the table, size junction boxes in accordance with NEC.

AWG	3 CONDUCTORS	5 CONDUCTORS	7 CONDUCTORS
#1	10" x 10" x 4"	12" x 12" x 4"	16" x 16" x 4"
#2	8" x 8" x 4"	10" x 10" x 4"	12" x 12" x 4"
#4	8" x 8" x 4"	10" x 10" x 4"	10" x 10" x 4"
#6	8" x 8" x 4"	8" x 8" x 4"	10" x 10" x 4"
#8	8" x 8" x 4"	8" x 8" x 4"	8" x 8" x 4"

4. Junction boxes with an internal volume of less than 100 cu. in. and supported by entering raceways must have threaded entries or hubs identified for the intended purpose and supported by connection of two or more rigid metal conduits. Secure conduit within 3 ft. of the enclosure or within 18 in. of the enclosure if all conduit entries are on the same side. Mechanically secure all junction boxes with an internal volume greater than 100 cu. inches.

5. Provide hot dipped galvanized cast iron or sand cast aluminum outlet boxes for junction boxes containing only 10 AWG or 12 AWG conductors. Do not use die cast aluminum boxes. Size outlet boxes according to the NEC.

6. Do not use intermediate metal conduit (IMC) or electrical metallic tubing (EMT) unless specifically required by the plan sheets. When EMT is called for, provide junction boxes made from galvanized steel sheeting, listed and approved for outdoor use, unless otherwise noted on the plans. Size all galvanized steel junction boxes in accordance with the NEC. Provide junction boxes for IMC conduit systems that meet the same requirements for junction boxes used with RMC systems.

7. Provide PVC junction boxes intended for outdoor use on PVC conduit systems, unless otherwise noted on the plans.

8. Provide PVC elbows in PVC conduit systems, unless otherwise shown on the plans. Use only a flat, high tensile strength polyester fiber pull tape for pulling conductors through the PVC conduit system. When galvanized steel RMC elbows are specifically called for in the plans and any portion of the RMC elbow is buried less than 18 in., ground the RMC elbow by means of a grounding bushing on a rigid metal extension. Grounding of the rigid metal elbow is not required if the entire RMC elbow is encased in a minimum of 2 in. of concrete. PVC extensions are allowed on these concrete encased rigid metal elbows. RMC or PVC elbows are subsidiary to various bid items.

9. When required, provide High-Density Polyethylene (HDPE) conduit with factory installed internal conductors according to Item 622 "Duct Cable." At the Contractor's request and with approval by the Engineer, substitute HDPE conduit with no conductors for bored schedule 40 or schedule 80 PVC conduit bid under Item 618. Ensure bored HDPE substituted for PVC is schedule 40 and of the same size PVC called for in the plans. Ensure the substituted HDPE meets the requirements of Item 622, except that the conduit is supplied without factory-installed conductors. Make the transition of the HDPE conduit to PVC (or RMC elbow when required) at the bore pit. Provide conduit of the size and schedule as shown on the plans. Do not extend substituted conduit into ground boxes or foundations. Provide PVC or galvanized steel RMC elbows as called for at all ground boxes and foundations.

10. Use two-hole straps when supporting 2 in. and larger conduits. On electrical service poles, properly sized stainless steel or hot dipped galvanized one-hole standoff straps are allowed on the service riser conduit.

B. CONSTRUCTION METHODS

1. Provide and install expansion joint conduit fittings on all structure-mounted conduits at the structure's expansion joints to allow for movement of the conduit. In addition, provide and install expansion joint fittings on all continuous runs of galvanized steel RMC conduit externally exposed on structures such as bridges at maximum intervals of 150 ft. When requested by the project Engineer, supply manufacturer's specification sheet for expansion joint conduit fittings. Repair or replace expansion joint fittings that do not allow for movement at no additional cost to the Department. Provide the method of determining the amount of expansion to the Engineer upon request. Do not use LFMC or LFNC as a substitute for the required expansion conduit fittings.

2. Space all conduit supports at maximum intervals of 5 ft. Install conduit spacers when attaching metal conduit to surface of concrete structures. See "Conduit Mounting Options" on ED(2). Install conduit support within 3 ft. of all enclosures and conduit terminations.

3. Do not attach conduit supports directly to pre-stressed concrete beams except as shown specifically in the plans or as approved by the Engineer.

4. Unless otherwise shown on the plans, jack or bore conduit placed beneath existing roadways, driveways, sidewalks, or after the base or surfacing operation has begun. Backfill and compact the bore pits below the conduit per Item 476 "Jacking, Boring, or Tunneling Pipe or Box" prior to installing conduit or duct cable to prevent bending of the connections.

5. When placing conduit in the sub-grade of new roadways, backfill all trenches with excavated material unless otherwise noted on the plans. When placing conduit in the sub-base of new roadways, backfill all trenches with cement-stabilized base as per requirements of Items 110 "Excavation", 400 "Excavation and Backfill for Structures", 401 "Flowable Backfill", 402 "Trench Excavation Protection", and 403 "Temporary Special Shoring."

6. Provide and place warning tape approximately 10 in. above all trenched conduit as per Item 618.

7. During construction, temporarily cap or plug open ends of all conduit and raceways immediately after installation to prevent entry of dirt, debris and animals. Temporary caps constructed of durable duct tape are allowed. Tightly fix the tape to the conduit opening. Clean out the conduit and prove it clear in accordance with Item 618 prior to installing any conductors.

8. Ensure conduit entry into the top of any enclosure is waterproof by installing conduit sealing hubs or using boxes with threaded bosses. This includes surface mounted safety switches, meter cans, service enclosures, auxiliary enclosures and junction boxes. Grounding bushings on water tight sealing hubs are not required.

9. Fit the ends of all PVC conduit terminations with bushings or bell end fittings. Provide and install a grounding type bushing on all metal conduit terminations.

10. Install a bonding jumper from each grounding bushing to the nearest ground rod, grounding lug, or equipment grounding conductor. Ensure all bonding jumpers are the same size as the equipment grounding conductor. Bonding of conduit used as a casing under roadways for duct cable is not required, if the duct extends the full length through the casing.

11. At all electrical services, install a 6 AWG solid copper grounding electrode conductor.

12. Place conduits entering ground boxes so that the conduit openings are between 3 in. and 6 in. from the bottom of the box. See the ground box detail on sheet ED(4).

13. Seal ends of all conduits with duct seal, expandable foam, or by other methods approved by the Engineer. Seal conduit immediately after completion of conductor installation and pull tests. Do not use duct tape as a permanent conduit sealant. Do not use silicone caulk as a conduit sealant.

14. File smooth the cut ends of all mounting strut and conduit. Before installing, paint the field cut ends of all mounting strut and RMC (threaded or non-threaded) with zinc rich paint (94% or more zinc content) to alleviate overspray. Use zinc rich paint to touch up galvanized material as allowed under Item 445 "Galvanizing." Do not paint non-galvanized material with a zinc rich paint as an alternative for materials required to be galvanized.

SHEET 1 OF 1

Texas Department of Transportation

Traffic Operations Division Standard

ELECTRICAL DETAILS CONDUITS & NOTES

ED(1)-14

FILE:	ed1-14.dgn	DN:	CK:	DW:	CK:
© TxDOT	October 2014	CONT	SECT	JOB	HIGHWAY
REVISIONS					
		DIST	COUNTY		SHEET NO.
			WILLIAMSON		30

71A

DISCLAIMER:
The use of this standard is governed by the "Texas Engineering Practice Act". No warranty of any kind is made by TxDOT for any purpose whatsoever. TxDOT assumes no responsibility for the conversion of this standard to other formats or for incorrect results or damages resulting from its use.

DATE: 1/9/2025
FILE: pw:\\jmt-pw.bentley.com:jmt-pw-01\Documents\Projects\2022\22-01219-00\...

ELECTRICAL CONDUCTORS

A. MATERIAL INFORMATION

1. Provide Type XHHW insulated conductors in accordance with Departmental Material Specification (DMS)11040 "Conductors" and Item 620 "Electrical Conductors." Provide conductors as listed on the Material Producers List (MPL) on the Department web site under "Roadway Illumination and Electrical Supplies" Item 620. Color code insulated conductors in conformance with the NEC. Identify grounded (neutral) conductors with white insulation. Identify grounding conductors (ground wires) with green insulation or bare conductors. Identify ungrounded (hot) conductors with any color insulation except green, white, or gray. Keep color scheme consistent throughout the wiring system. Identify conductors 6 American Wire Gauge (AWG) and smaller by continuous color jacket. Identify electrical conductors 4 AWG and larger by continuous color jacket or by colored tape. When identifying conductors with colored tape, mark at least 6 in. of the conductor's insulation with half laps of tape.

2. Provide a solid copper 6 AWG grounding electrode conductor to bond the electrical service equipment to the concrete encased grounding electrode or the ground rod at the service location. Connect the grounding electrode conductor to the ground rod with a UL listed connector in accordance with DMS 11040. Connect the grounding electrode conductor to the concrete encased grounding electrode as shown in the plans.

3. Where two or more circuits are present in one conduit or enclosure, permanently identify the conductors of each branch circuit by attaching a non-metallic tag around both circuit conductors at each accessible location. Provide tags with two straps, large enough to indicate circuit number, letter, or other identification as shown in the plans. Print circuit identification on the tag with a permanent marker.

4. Use listed compression or screw type pressure connectors, terminal blocks, or split bolt connectors for splicing as specified in DMS 11040. Use hot melt adhesive tape to fill the gap and seal the ends of heat shrink tubing. Provide UL listed gel-filled insulating splice covers. Splicing materials, insulating materials, breakaway disconnects, splice covers, and fuse holders are subsidiary to various bid items.

B. CONSTRUCTION METHODS

1. Use only a flat, high tensile strength polyester fiber pull tape for pulling conductors through the conduit system. After installing conductors in conduit, perform conductor pull test. If a conductor cannot be freely pulled, make any needed alterations or repairs at no additional cost to the department. Perform insulation resistance tests in accordance with Item 620. Coordinate with the Engineer to witness the tests.

2. Leave 2 ft. minimum, 3 ft. maximum length for each conductor up to the splice in ground boxes. Leave 3 ft. minimum, 4 ft. maximum length of conductor in ground boxes when pulled through with no splice. Leave 1 ft. minimum, 1.5 ft. maximum length of conductor at enclosures, weatherheads and pole bases.

3. Make splices only in junction boxes, ground boxes, pole bases, or electrical enclosures and use only listed compression or screw type pressure connectors, terminal blocks, or split bolt connectors. Insulate splices with heavy wall heat shrink tubing or gel-filled insulating splice covers to provide a watertight splice. Overlap conductor insulation with heat shrink tubing a minimum of 2 in. past both sides of the splice. Where heat shrink tubing may not shrink sufficiently to provide a watertight seal around the individual conductors, prior to heating the tubing, increase the diameter of the conductor insulation using hot melt adhesive tape to provide a watertight seal between the individual conductors and the heat shrink tubing. Ensure the tape extends past the heat shrink tubing. Use hot melt adhesive tape to fill the gap and seal the ends of heat shrink tubing. Heat shrink tubing that appears to have been burned, or overheated, is considered defective and must be replaced.

4. Size and install gel-filled insulating splice covers according to manufacturer's specifications when used in place of heat shrink tubing.

5. Wire nuts with factory applied waterproof sealant may be used for 8 AWG or smaller conductors in above ground junction boxes, but not in pole bases or ground boxes. Install wire nuts in an upright position to prevent the accumulation of water.

6. Support conductors in illumination poles with a J-hook at the top of the pole.

7. When terminating conductors, remove the insulation and jacketing material without nicking the individual strands of the conductor. Conductors with nicked individual conductor strands or removed strands will be considered damaged.

8. Replace conductors and cables that are damaged beyond repair or that fail an insulation resistance test at no additional cost to the department.

9. Do not repair damaged conductors with duct tape, electrical tape, or wire nuts. Use only approved splicing methods.

10. Do not terminate more than one conductor under a single connector, unless the connector is rated for multiple conductors. Do not exceed the pressure connector's listing for maximum number and size of conductors allowed.

11. Install breakaway connectors on conductors bid under Item 620 whenever those conductors pass through a breakaway support device. Follow manufacturer's instructions when terminating conductors to breakaway connectors. Properly torque threaded connections. Proper terminations are critical to the safe operation of breakaway devices. Trim waterproofing boots on breakaway connectors to fit snugly around the conductor to ensure waterproof connection. Only one conductor may enter a single opening in a boot. Provide waterproof boots with the correct number of openings. Leave unused openings factory sealed. Use prequalified breakaway connectors as shown on the MPL.

12. Provide and install a separate stranded equipment grounding conductor (EGC) in all conduits that contain circuit wiring of 50 volts or more. Unless shown elsewhere, size the EGC to be the same size as the largest current carrying conductor contained in the conduit. Ensure all EGCs are bonded together at every accessible location. For traffic signal installations, provide a minimum size 8 AWG EGC. The EGC is paid for under Item 620.

C. TEMPORARY WIRING

1. Install temporary conductors and electrical equipment in accordance with the NEC article "Temporary Installations" and Department standard sheets.

2. Provide a ground fault circuit interrupter (GFCI) for power outlets for portable electrical equipment, power tools, ice machines, ice storage bins and refrigerators located outdoors at grade. GFCI may be any one of the following: molded cord and plug set, receptacle, or circuit breaker type.

3. Use listed wire nuts with factory applied sealant for temporary wiring where approved.

4. Enclose conductor splices within a listed enclosure or ground box, or ensure the splices are more than 10 ft. above grade vertically and more than 5 ft. horizontally from any metal structure. Where installing temporary conductors in areas subject to vehicle traffic or mobile construction equipment, ensure the vertical clearance to ground is at least 18 ft. when measured at the lowest point. Ground messenger wires that support power conductors in conformance with the NEC.

5. Protect and when necessary repair any existing electrical conduits uncovered during the construction process in a timely manner and in conformance with the NEC.

GROUND RODS & GROUNDING ELECTRODES

A. MATERIAL INFORMATION

1. Provide and install a grounding electrode at electrical services. Provide ground rods according to DMS 11040 and the plans. Larger diameter or longer length rods may be called for in some specific locations, see the individual plans sheets. Concrete encased grounding electrodes may be called for in specific locations including electrical service, see individual plan sheets.

B. CONSTRUCTION METHODS

1. Furnish auxiliary ground rods for lightning protection and install in soil, concrete, or both, as called for in the plans. For ground rods installed in concrete, ensure the connection of the conductor to the ground rod is readily accessible for inspection or repairs. For ground rods installed in soil, ensure that the upper end is between 2 to 4 in. below finished grade.

2. Do not place ground rods in the same drilled hole as a timber pole.

3. Install ground rods so the imprinted part number is at the upper end of the rod.

4. Remove all non-conductive coatings such as concrete splatter from the rod at the clamp location.

5. Route all conductors as short and straight as possible for connection to lightning protection ground rods. When a bend is required, ensure a minimum radius bend of four inches for these conductors.

6. Unless otherwise called for in the plans, protect grounding electrode conductors with non-metallic conduit. When protecting grounding electrode conductors with metal conduit, provide and install a grounding type bushing and properly sized bonding jumper on each end of the metal conduit.

7. Written authorization is required before installing a ground rod in a horizontal trench for rocky soil or a solid rock bottom.

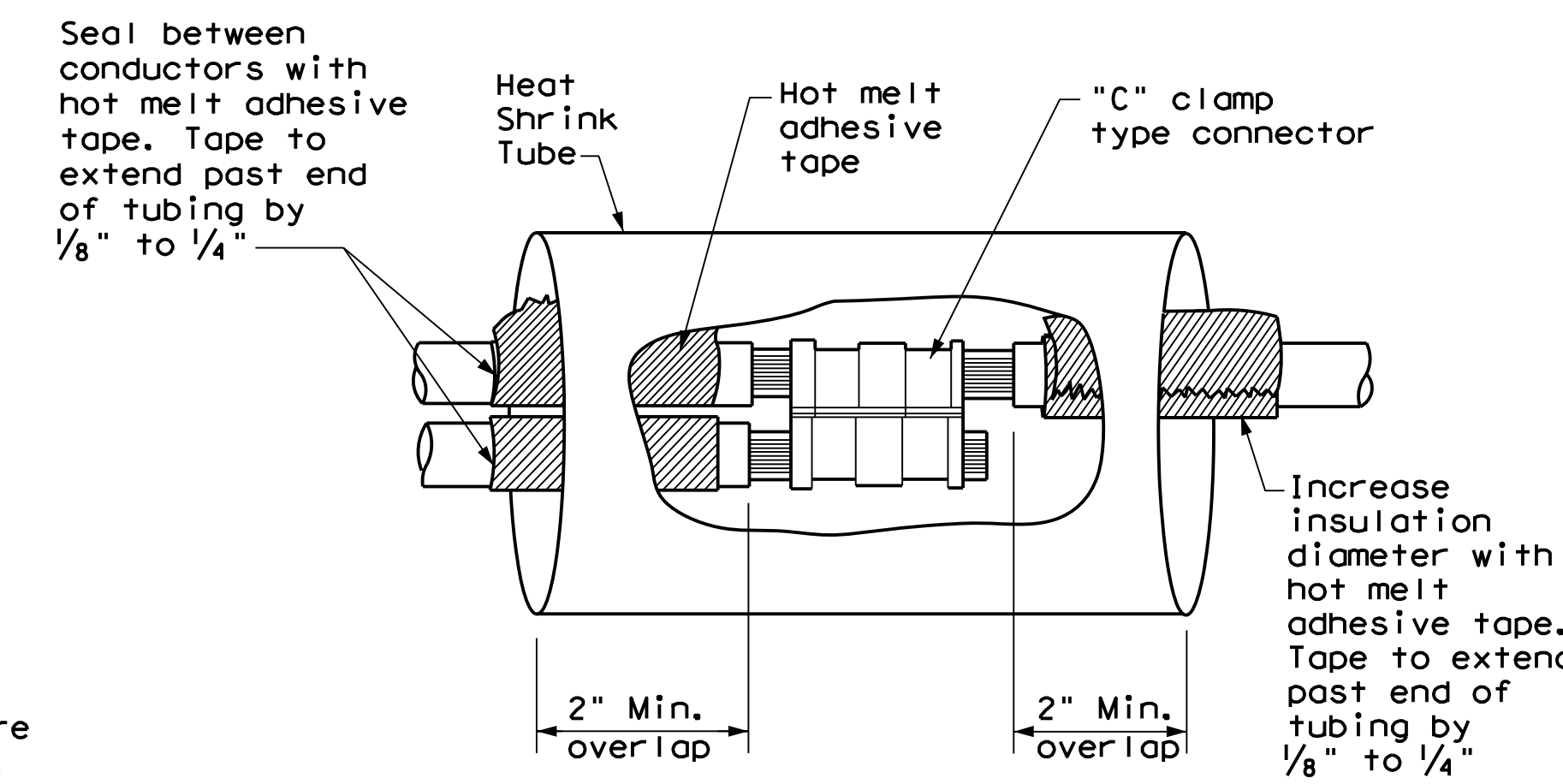

SPLICE OPTION 1
Compression Type

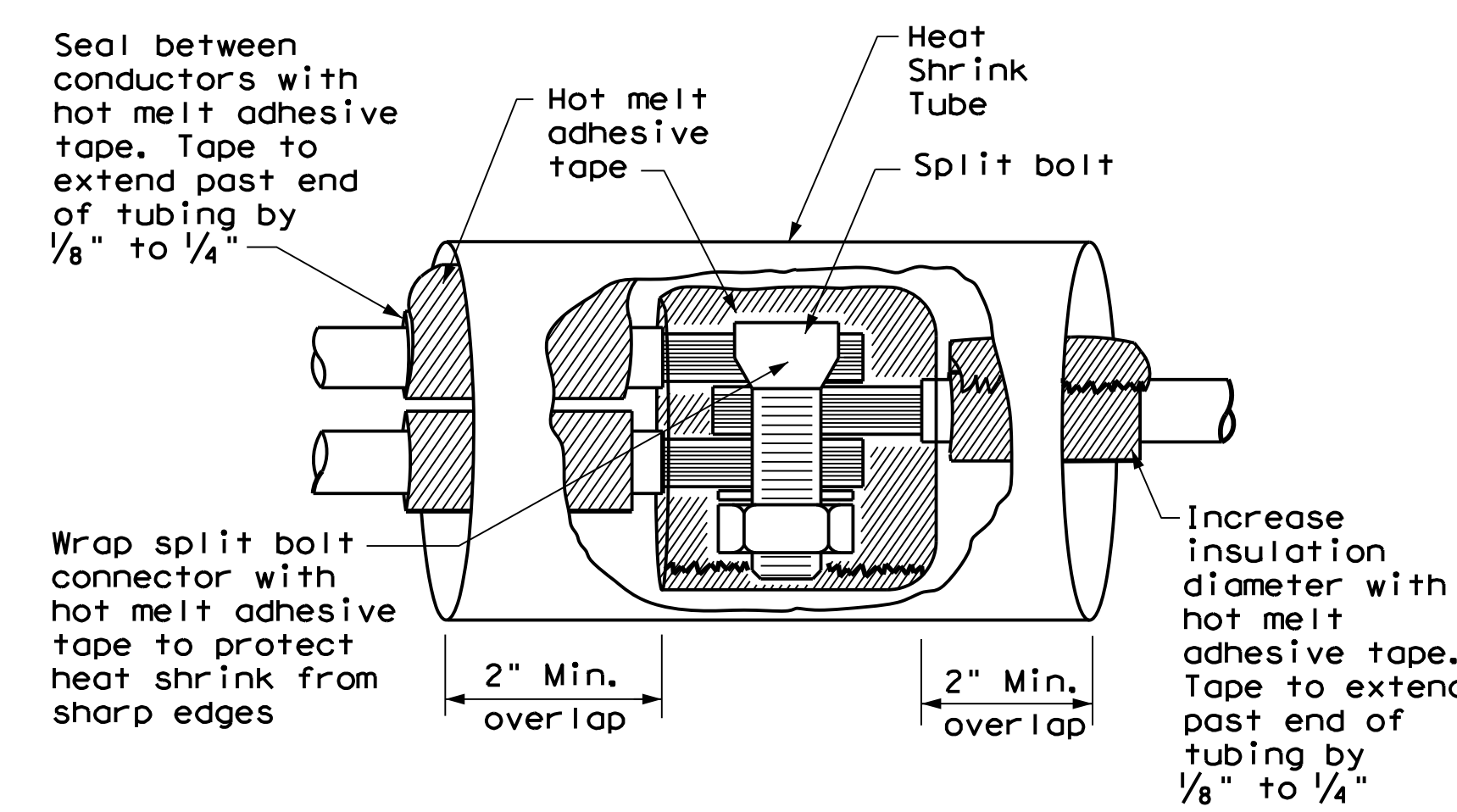

SPLICE OPTION 2
Split Bolt Type

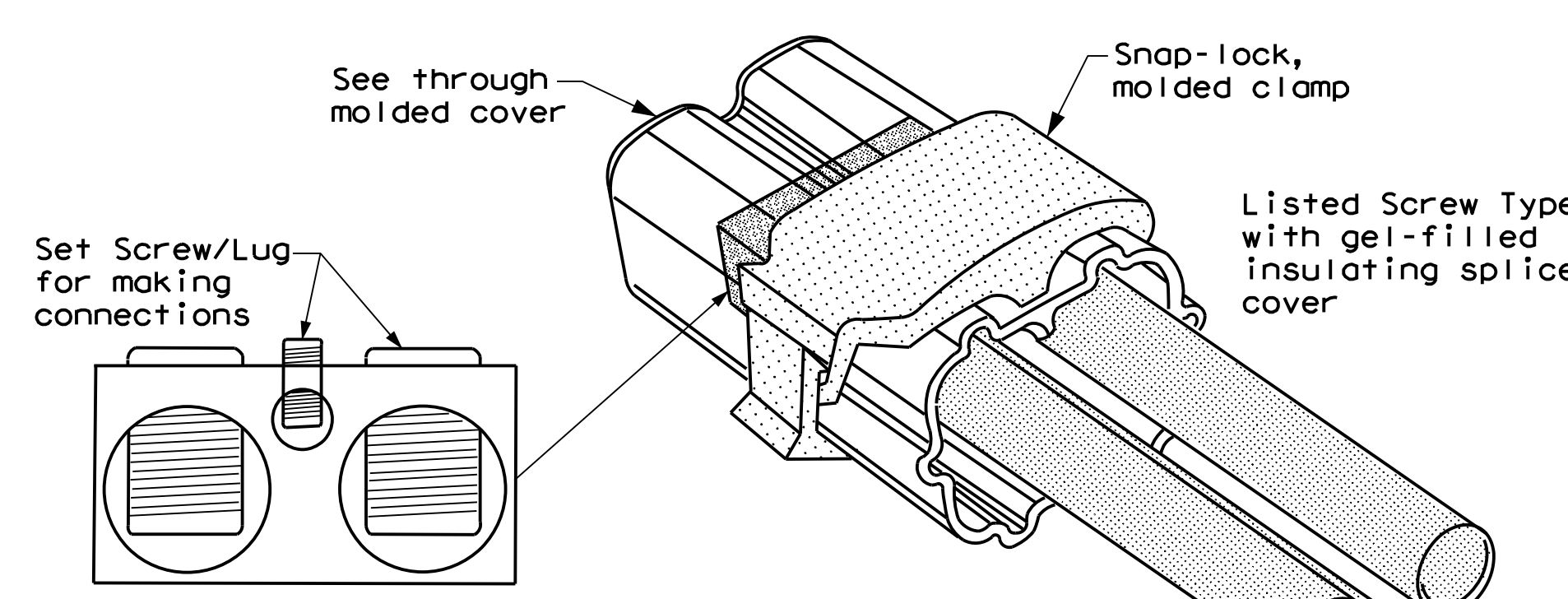

SPLICE OPTION 3
Listed Screw Type

SHEET 1 OF 1

Texas Department of Transportation | Traffic Operations Division Standard

ELECTRICAL DETAILS CONDUCTORS

ED(3)-14

FILE: ed3-14.dgn	DN: TxDOT	CK: TxDOT	DW: TxDOT	CK: TxDOT
© TxDOT October 2014	CONT	SECT	JOB	HIGHWAY
REVISIONS				
	DIST	COUNTY		SHEET NO.
		WILLIAMSON		31

71C

DISCLAIMER:
The use of this standard is governed by the "Texas Engineering Practice Act". No warranty of any kind is made by TxDOT for any purpose whatsoever. TxDOT assumes no responsibility for the conversion of this standard to other formats or for incorporation of errors or omissions in drawings, specifications and data prepared from it. Best practices require that the engineer or architect seal the data or documents prepared by him/her.

DATE: 1/9/2025
FILE: pw:\\jmt-pw.bentley.com:jmt-pw-01\Documents\Projects\2022\22-01219-001\Design\Drawings\Structural\Sheets\ed4-14.dgn

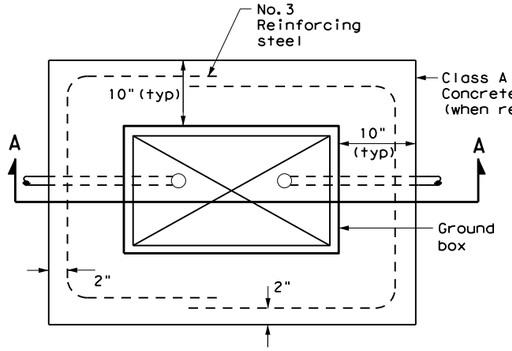

PLAN VIEW

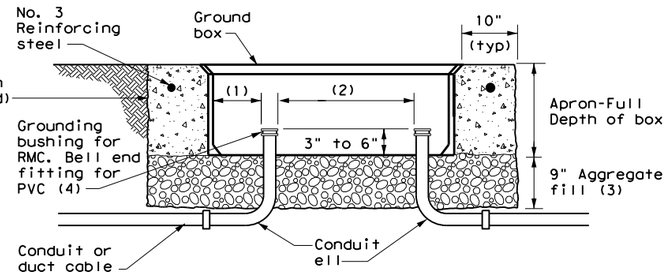

SECTION A - A

APRON FOR GROUND BOX

(1) Uniformly space ends of conduits within the ground box. Position ends of conduits so that ground box walls do not interfere with the installation of grounding bushings or bell end fittings.

(2) Maintain sufficient space between conduits to allow for proper installation of bushing.

(3) Place aggregate under the box, not in the box. Aggregate should not encroach on the interior volume of the box.

(4) Install a grounding bushing on the upper end of all RMC terminating in a ground box. Ground RMC elbows when any part of the elbow is less than 18 in. below the bottom of the ground box. Install a PVC bushing or bell end fitting on the upper end of all PVC conduits terminating in a ground box.

GROUND BOX DIMENSIONS	
TYPE	OUTSIDE DIMENSIONS (INCHES) (Width x Length X Depth)
A	12 X 23 X 11
B	12 X 23 X 22
C	16 X 29 X 11
D	16 X 29 X 22
E	12 X 23 X 17

GROUND BOX COVER DIMENSIONS								
TYPE	DIMENSIONS (INCHES)							
	H	I	J	K	L	M	N	P
A, B & E	23 1/4	23	13 3/4	13 1/2	9 7/8	5 1/8	1 3/8	2
C & D	30 1/2	30 1/4	17 1/2	17 1/4	13 1/4	6 3/4	1 3/8	2

GROUND BOXES

A. MATERIALS

1. Provide polymer concrete ground boxes measuring 16x30x24 in. (WxLxD) or smaller in accordance with Departmental Material Specification (DMS) 11070 "Ground Boxes" and Item 624 "Ground Boxes."

2. Provide Type A, B, C, D, and E ground boxes as shown in the plans, and as listed on the Material Producers List (MPL) on the Department web site under "Roadway Illumination and Electrical Supplies," Item 624.

3. Ensure ground box cover is correctly labeled in accordance with DMS 11070.

4. Provide larger ground boxes in accordance with Item 624 and as shown in the plans.

B. CONSTRUCTION METHODS

1. Remove all gravel and dirt from conduit. Cap all conduits prior to placing aggregate and setting ground box. Provide Grade 3 or 4 coarse aggregate as shown on Table 2 of Item 302 "Aggregates for Surface Treatments." Ensure aggregate bed is in place and at least 9 inches deep, prior to setting the ground box. Install ground box on top of aggregate.

2. Cast ground box aprons in place. Reinforcing steel may be field bent. Ensure the depth of concrete for the apron extends from finished grade to the top of the aggregate bed under the box. Ground box aprons, including concrete and reinforcing steel, are subsidiary to ground boxes when called for by descriptive code.

3. Keep bolt holes in the box clear of dirt. Bolt covers down when not working in ground boxes.

4. Install all conduits and ells in a neat and workmanlike manner. Uniformly space conduits so grounding bushings and bell end fittings can easily be installed.

5. Temporarily seal all conduits in the ground box until conductors are installed.

6. Permanently seal conduits immediately after the completion of conductor installation and pull tests. Permanently seal the ends of all conduits with duct seal, expandable foam, or other method as approved. Do not use duct tape as a permanent conduit sealant. Do not use silicone caulk as a sealant.

7. When a ground rod is present in a ground box, bond all equipment grounding conductors together and to the ground rod with listed connectors.

8. When a type B or D ground box is stacked to meet volume requirements, it is allowable to cut an appropriately sized hole for conduit entry in the side wall at least 18 inches below grade.

9. If an existing ground box in the contract has a metal cover, bond the cover to the equipment grounding conductor with a 3 ft. long stranded bonding jumper the same size as the grounding conductor. The bonding jumper is subsidiary to various bid items. Verify existing ground boxes with metal covers are shown on the plans, with notes fully describing the work required.

10. If other ground boxes with metal covers are within the project limits but are not part of the contract, the Engineer may direct the Contractor to bond the metal covers, identifying the specific boxes in writing. This work will be paid for separately.

11. Bond metal ground box covers to the grounding conductor with a tank ground type lug.

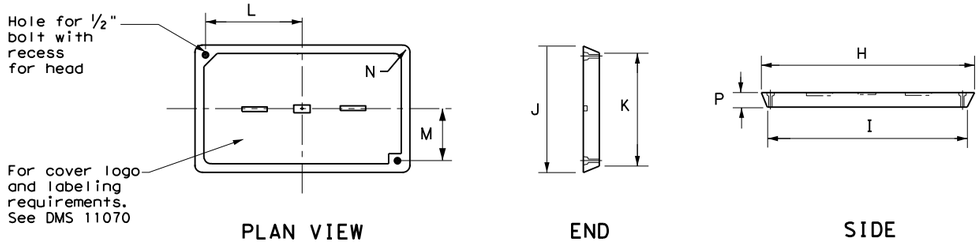

PLAN VIEW | END | SIDE

GROUND BOX COVER

SHEET 1 OF 1

Texas Department of Transportation

Traffic Operations Division Standard

ELECTRICAL DETAILS GROUND BOXES

ED(4)-14

FILE: ed4-14.dgn	DN: TxDOT	CK: TxDOT	DW: TxDOT	CK: TxDOT
©TxDOT October 2014	CONT	SECT	JOB	HIGHWAY
REVISIONS				
	DIST	COUNTY		SHEET NO.
		WILLIAMSON		32

71D

DISCLAIMER:
The use of this standard is governed by the "Texas Engineering Practice Act". No warranty of any kind is made by TxDOT for any purpose whatsoever. TxDOT assumes no responsibility for the conversion of this standard to other formats or for incorrect results or damages resulting from its use.

DATE: 1/9/2025
FILE: pw:\\jmt-pw.bentley.com:jmt-pw-01\Documents\Projects\2022\22-01219-00f\

ELECTRICAL SERVICES NOTES

1. Provide new materials. Ensure installation and materials comply with the applicable provisions of the National Electrical Code (NEC) and National Electrical Manufacturers Association (NEMA) standards. Ensure material is Underwriters Laboratories (UL) listed. Provide and install electrical service conduits, conductors, disconnects, contactors, circuit breaker panels, and branch circuit breakers as shown on the Electrical Service Data chart in the plans. Faulty fabrication or poor workmanship in material, equipment, or installation is justification for rejection. Where manufacturers provide warranties and guarantees as a customary trade practice, furnish these to the State.

2. Provide electrical services in accordance with Electrical Details standard sheets, Departmental Material Specification (DMS) 11080 "Electrical Services,"DMS 11081 "Electrical Services-Type A," DMS 11082 "Electrical Services-Type C," DMS 11083 "Electrical Services-Type D," DMS 11084 "Electrical Services-Type T," DMS 11085 "Electrical Services-Pedestal (PS)", and Item 628 "Electrical Services" of the Standard Specifications. Provide electrical service types A, C, and D, as listed on the Material Producers List (MPL) on the Department web site under "Roadway Illumination and Electrical Supplies," Item 628. Provide other service types as detailed on the plans.

3. Provide all work, materials, services, and any incidentals needed to install a complete electrical service as specified in the plans.

4. Coordinate with the Engineer and the utility provider for metering and compliance with utility requirements. Primary line extensions, connection charges, meter charges, and other charges by the utility company to provide power to the location are paid for in accordance with Item 628. Get approval for the costs associated with these charges prior to engaging the utility company to do the work. Consult with the utility provider to determine costs and requirements, and coordinate the work as approved.

5. The enclosure manufacturer will provide Master Lock Type 2 with brass tumblers keyed #2195 for all custom electrical enclosures. Installing Contractor is to provide Master Lock #2195 Type 2 with brass tumblers for "off the shelf" enclosures. Master Lock #2195 keys and locks become property of the State. Unless otherwise approved, do not energize electrical service equipment until locks are installed.

6. Enclosures with external disconnects that de-energize all equipment inside the enclosure do not need a dead front trim. Protect incoming line terminations from incidental contact as required by the NEC.

7. When galvanized is specified for nuts, screws, bolts or miscellaneous hardware, stainless steel may be used.

8. Provide wiring and electrical components rated for 75°C. Provide red, black, and white colored XHHW service entrance conductors of minimum size 6 American Wire Gauge (AWG). Identify size 6 AWG conductors by continuous color jacket. Identify electrical conductors sized 4 AWG and larger by continuous color jacket or by colored tape. Mark at least 6 inches of the conductor's insulation with half laps of colored tape, when identifying conductors. Ensure each service entrance conductor exits through a separately bushed non-metallic opening in the weatherhead. The lengths of the conductors outside the weatherhead are to be 12 inches minimum, 18 inches maximum, or as required by utility.

9. All electrical service conduit and conductors attached to the electrical service including the riser or the elbow below ground are subsidiary to the electrical service. For an underground utility feed, all service conduit and conductors after the elbow, including service conduit and conductors for the utility pole riser when furnished by the Contractor, will be paid for separately.

10. Provide rigid metal conduit (RMC) for all conduits on service, except for the ½ in. PVC conduit containing the electrical service grounding electrode conductor. Size the service entrance conduit as shown in the plans. Ensure conduit for branch circuit entry to enclosure is the same size as that shown on the layout sheets for branch circuit conduit. Extend all rigid metal conduits a minimum of 6 inches underground and then couple to the type and schedule of the conduit shown on the layout for that particular branch circuit. Install a grounding bushing on the RMC where it terminates in the service enclosure.

11. Use of liquidtight flexible metal conduit (LFMC) is allowed between the meter and service enclosure when they are mounted 90 to 180 degrees to each other. Size the LFMC the same size as service entrance conduit. LFMC must not exceed 3 feet in length. Strap LFMC within 1 foot of each end. LFMC less than 12 inches in length need not be strapped. Each end of LFMC must have a grounding bushing or be terminated with a grounding fitting. The LFMC must contain a grounded (neutral) conductor. Ensure any bend in LFMC never exceeds 180 degrees. A pull test is required on all installed conductors, with at least six inches of free conductor movement demonstrated to the satisfaction of the Engineer.

12. Ensure all mounting hardware and installation details of services conform to utility company specifications.

13. For all electrical service enclosures listed under Item 628 on the MPL, the UL 508 enclosure manufacturers will prepare and submit a schematic drawing unique to each service. Before shipment to the job site, place the applicable laminated schematic drawings and the laminated plan sheet showing the electrical service data chart used to build the enclosure in the enclosure's data pocket. The installing contractor will copy and laminate the actual project plan sheets detailing all equipment and branch circuits supplied by that service. The laminated plan sheets are to be placed in the service enclosure's document pocket. Reduce 11 in. x 17 in. plan sheets to 8 ½ in. x 11 in. before laminating. If the installation differs from the plan sheets, the installing contractor is to redline plan sheets before laminating.

14. When providing an "Off The Shelf" Type D or Type T service, provide laminated plan sheets detailing equipment and branch circuits supplied by that service. Reduce 11 in. x 17 in. plan sheets to 8 ½ in. x 11 in before laminating. Deliver these drawings before completion of the work to the Engineer, instead of placing in enclosure that has no door pocket.

15. Do not install conduit in the back wall of a service enclosure where it would penetrate the equipment mounting panel inside the enclosure. Provide grounding bushings on all metal conduits, and terminate bonding jumpers to grounding bus. Grounding bushings are not required when the end of the metal conduit is fitted with a conduit sealing hub or threaded boss, such as a meter base hub.

SERVICE ASSEMBLY ENCLOSURE

1. Provide threaded hub for all conduit entries into the top of enclosure.

2. Type galvanized steel (GS) enclosures may be used for Type C panelboards and for Type D and T services that do not use an enclosure mounted photocell or lighting contactor. Provide GS enclosures in accordance with DMS 11080, 11082, 11083, and 11084.

3. Provide aluminum (AL) and stainless steel (SS) enclosures for Types A, C, and D in accordance with DMS 11080, 11081, 11082, 11083, and 11084. Do not paint stainless steel.

4. Provide pedestal service (PS) enclosures in accordance with ED(9) and DMS 11080 and 11085. Do not provide GS pedestal services. If GS is shown in the PS descriptive code, provide an AL enclosure.

MAIN DISCONNECT & BRANCH CIRCUIT BREAKERS

1. Field drill flange-mounted remote operator handle if needed, to ensure handle is lockable in both the "On" and "Off" positions.

2. When the utility company provides a transformer larger than 50 KVA, verify that the available fault current is less than the circuit breaker's ampere interrupting capacity (AIC) rating and provide documentation from the electric utility provider to the Engineer.

PHOTOELECTRIC CONTROL

1. Provide photocell as listed on the MPL. Move, adjust, or shield the photocell from stray or ambient night time light to ensure proper operation. Mount photocell facing north when practical. Mount top of pole photocells as shown on Top Mounted Photocell Detail.

* ELECTRICAL SERVICE DATA

Elec. Service ID	Plan Sheet Number	Electrical Service Description	Service Conduit **Size	Service Conductors No./Size	Safety Switch Amps	Main Ckt. Bkr. Pole/Amps	Two-Pole Contractor Amps	Panelbd/ Loadcenter Amp Rating	Branch Circuit ID	Branch Ckt. Bkr. Pole/Amps	Branch Circuit Amps	KVA Load
SB 183	289	ELC SRV TY A 240/480 100(SS)AL(E)SF(U)	2"	3/#2	100	2P/100	100	N/A	Lighting NB	2P/40	26	28.1
									Lighting SB	2P/40	25	
									Underpass	1P/20	15	
NB Access	30	ELC SRV TY D 120/240 060(NS)SS(E)TS(O)	1 ¼"	3/#6	N/A	2P/60		100	Sig. Controller	1P/30	23	5.3
							30		Luminaires	2P/20	9	
									CCTV	1P/20	3	
2nd & Main	58	ELC SRV TY T 120/240 000(NS)GS(N)SP(O)	1 ¼"	3/#6	N/A	N/A	N/A	70	Flashing Beacon 1	1P/20	4	1.0
									Flashing Beacon 2	1P/20	4	

* Example only, not for construction. All new electrical services must have electrical service data chart specific to that service as shown in the plans.

** Verify service conduit size with utility. Size may change due to utility meter requirements. Ensure conduit size meets the National ELectrical Code.

EXPLANATION OF ELECTRICAL SERVICE DESCRIPTIVE CODE

ELEC SERV TY X XXX/XXX XXX (XX) XX (X) XX (X)

Schematic Type

Service Voltage V / V

Disconnect Amp Rating
000 indicates main lug only/
Typically Type T

(SS)= Safety Switch Ahead of Meter-Check with Utility
(NS)= No safety Switch Ahead of Meter-Check with Utility

Enclosure Type
GS= Galvanized steel("off the shelf")
SS= Stainless steel(Custom Enclosure)See MPL
AL= Aluminum (Custom Enclosure)See MPL

Photocell Mounting Location
(E)= Inside Service/Enclosure Mounted
(T)= Top of pole
(L)= Luminaire mounted
(N)= None/No Photocell or Lighting Contactor Required

Service Support Type
GC= Granite concrete
OC= Other concrete
TP= Timber pole
SP= Steel pole
SF= Steel frame
OT= Pole by others or paid for separately
EX= Existing pole
TS= Service on traffic signal pole
PS= Pedestal Service

O= Overhead Service Feed from Utility
U= Underground Service Feed from Utility

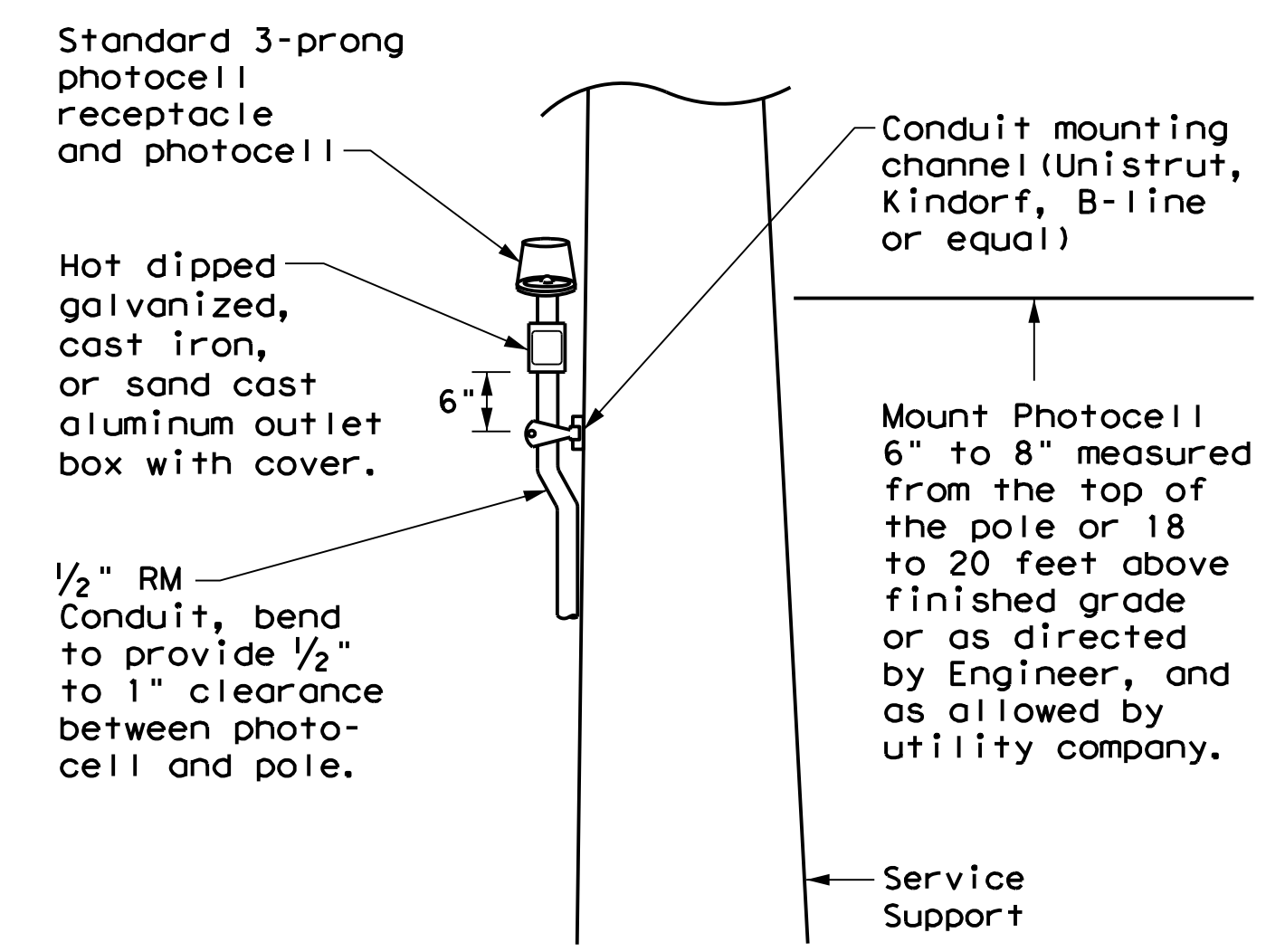

TOP MOUNTED PHOTOCELL

Install conduit strap maximum 3 feet from box. 5 foot maximum spacing between straps supporting conduit.

SHEET 1 OF 1

Texas Department of Transportation | Traffic Operations Division Standard

ELECTRICAL DETAILS SERVICE NOTES & DATA

ED(5)-14

FILE: ed5-14.dgn	DN: TxDOT	CK: TxDOT	DW: TxDOT	CK: TxDOT
©TxDOT October 2014	CONT	SECT	JOB	HIGHWAY
REVISIONS	DIST	COUNTY		SHEET NO.
		WILLIAMSON		33

71E

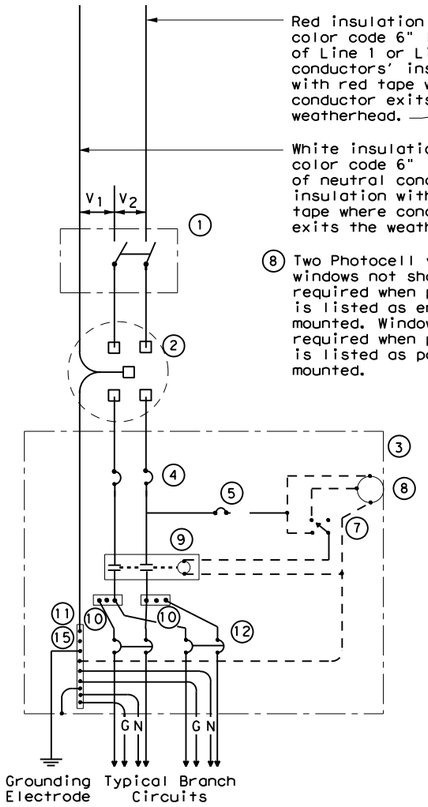

SCHEMATIC TYPE A
THREE WIRE

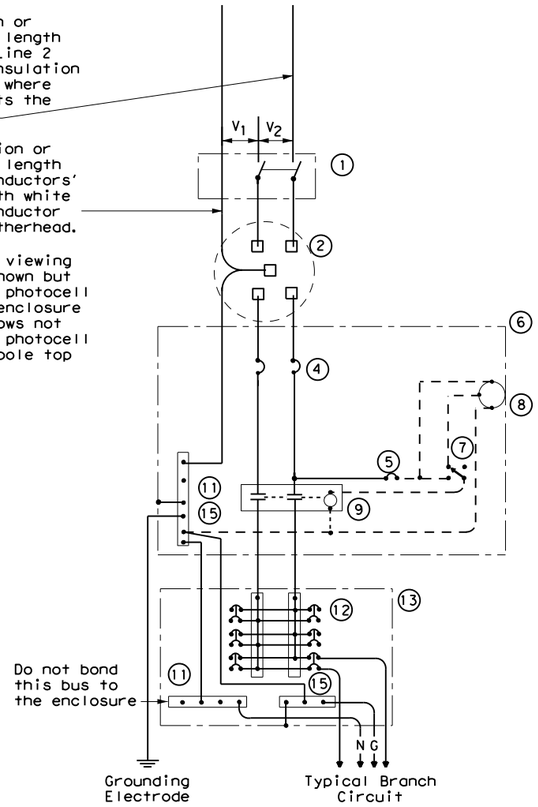

SCHEMATIC TYPE C
THREE WIRE

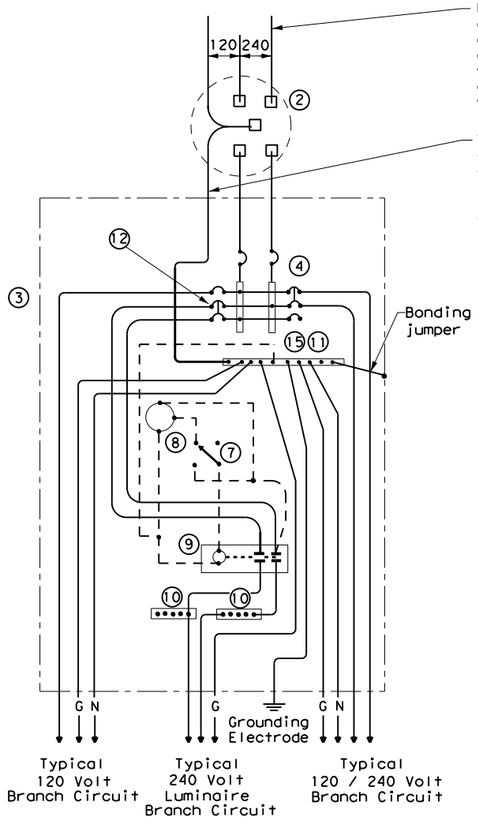

SCHEMATIC TYPE D - CUSTOM
120/240 VOLTS - THREE WIRE

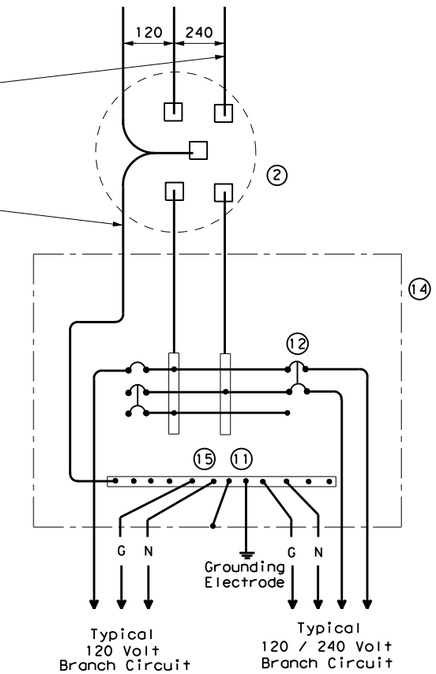

SCHEMATIC TYPE T
120/240 VOLTS - THREE WIRE

Galvanized steel-"Buy Off The Shelf" only. When required install photocell top of the pole or on luminaire only, no lighting contractor will be installed.

WIRING LEGEND	
———	Power Wiring
- - - -	Control Wiring
—N—	Neutral Conductor
—G—	Equipment grounding conductor-always required

SCHEMATIC LEGEND	
1	Safety Switch (when required)
2	Meter (when required-verify with electric utility provider)
3	Service Assembly Enclosure
4	Main Disconnect Breaker (See Electrical Service Data)
5	Circuit Breaker, 15 Amp (Control Circuit)
6	Auxiliary Enclosure
7	Control Station ("H-O-A" Switch)
8	Photo Electric Control (enclosure-mounted shown)
9	Lighting Contactor
10	Power Distribution Terminal Blocks
11	Neutral Bus
12	Branch Circuit Breaker (See Electrical Service Data)
13	Separate Circuit Breaker Panelboard
14	Load Center
15	Ground Bus

SHEET 1 OF 1

Texas Department of Transportation

Traffic Operations Division Standard

ELECTRICAL DETAILS SERVICE ENCLOSURE AND NOTES

ED(6)-14

FILE: ed6-14.dgn	DN: TxDOT	CK: TxDOT	DW: TxDOT	CK: TxDOT
© TxDOT October 2014	CONT	SECT	JOB	HIGHWAY
REVISIONS				
	DIST	COUNTY		SHEET NO.
		WILLIAMSON		34

71F

DISCLAIMER:
The use of this standard is governed by the "Texas Engineering Practice Act". No warranty of any kind is made by TxDOT for any purpose whatsoever. TxDOT assumes no responsibility for the conversion of this standard to other formats or for incorrect results or damages resulting from its use.

DATE: 1/9/2025
FILE: pw:\\jmt-pw.bentley.com:jmt-pw-01\Documents\Projects\2022\22-01219-001\Design\Design Standards\ed6-14.dgn

DISCLAIMER:
The use of this standard is governed by the "Texas Engineering Practice Act". No warranty of any kind is made by TxDOT for any purpose whatsoever. TxDOT assumes no responsibility for the conversion of this standard to other formats or for incorrect results or damages resulting from its use.

DATE: 1/9/2025
FILE: pw:\\jmt-pw.bentley.com:jmt-pw-01\Documents\Projects\2022\22-01219-001\Design\Standards\ed7-14.dgn

SUPPORT TYPE STEEL POLE (SP) AND STEEL FRAME (SF)

1. Provide steel pole and steel frame supports as per TxDOT Departmental Material Specification (DMS)11080 "Electrical Services." Mount all equipment and conduit on 12 gauge galvanized steel or stainless steel channel strut, 1 ½ in. or 1 ⅝ in. wide by 1 in. up to 3 ¾ in. deep Unistrut, Kindorf, B-line or equal. Bolt or weld all channel and hardware to vertical members as approved. Do not stack channel. File smooth and paint field cut ends of all channel with zinc-rich paint before installing.

2. Provide poles for overhead service with an eyebolt or similar fitting for attachment of the service drop to the pole in conformance with the electric utility provider's specifications.

3. Provide and install galvanized ¾ in. x 18 in. x 4 in. (dia. x length x hook length) anchor bolts for underground service supports. Provide and install galvanized ¾ in. x 56 in. x 4 in. anchor bolts for overhead service supports. Ensure anchor bolts have 3 in of thread, with 3 ¼ in. to 3 ½ in. of the exposed anchor bolt projecting above finished foundation. Provide and install leveling nuts for all anchor bolts.

4. Bond one of the anchor bolts to the rebar cage with 6 AWG bare stranded copper conductor. Use listed mechanical connectors rated for embedment in concrete. See Inset B.

5. Furnish and install rigid metallic ells in all steel pole and steel frame foundations for all conduits entering the service from underground.

6. Use class C concrete for foundations. Ensure reinforcing steel is Grade 60 with 3" of unobstructed concrete cover.

7. Drill and tap steel poles and frames for ½ in. X 13 UNC tank ground fitting. For steel pole service supports, provide and install tank ground fitting 4 in. to 6 in. below electrical service enclosure. Provide properly sized hole through the bottom of the enclosure for the service grounding electrode conductor. Ensure electrical service grounding electrode conductor is as short and straight as possible from the enclosure to the tank ground fitting. For steel frame service supports, provide and install tank ground fitting on steel frame post. Install service grounding electrode conductor in a non-metallic conduit or tubing from the enclosure to the steel frame post. Connect electrical service grounding electrode conductor to the tank ground fitting. See steel frame and steel pole details and Inset A for more information. Size service entrance conduit and branch circuit conduit as shown in the plans. For underground conduit runs from the electrical service, extend RMC from the service enclosure to an RMC elbow, and then connect the schedule type and size of conduit shown in the plans. Provide and install grounding bushings where RMC terminates in the enclosure. Grounding bushings are not required when RMC is fitted into a sealing hub or threaded boss.

8. If Steel pole or frame is painted, bond each separate painted piece with a bonding jumper attached to a tapped hole.

9. Provide ¼" - 20 machine screws for bonding. Do not use sheet metal screws. Remove all non-conductive material at contact points. Terminate bonding jumpers with listed devices. Install minimum size 6 AWG stranded copper bonding jumpers. Make up all threaded bonding connections wrench tight.

10. Avoid contact of the service drop and service entrance conductors with the metal pole to prevent abrasion of the insulated conductors.

11. Shop drawings are not required for service support structure unless specifically stated elsewhere or directed by the Engineer.

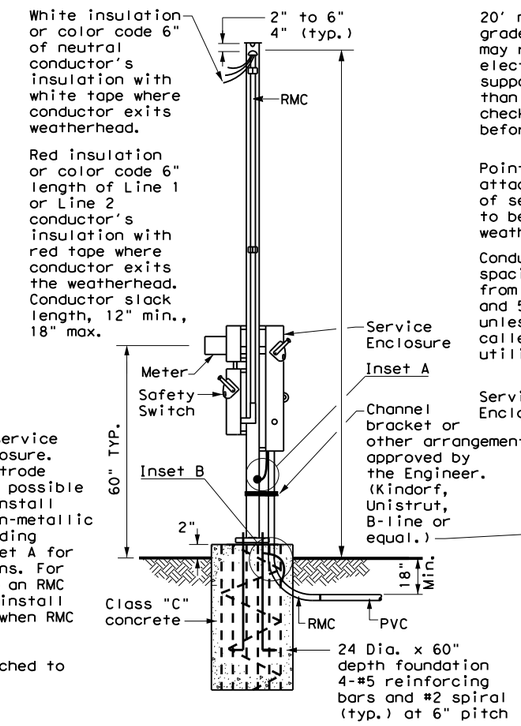

WITH SAFETY SWITCH

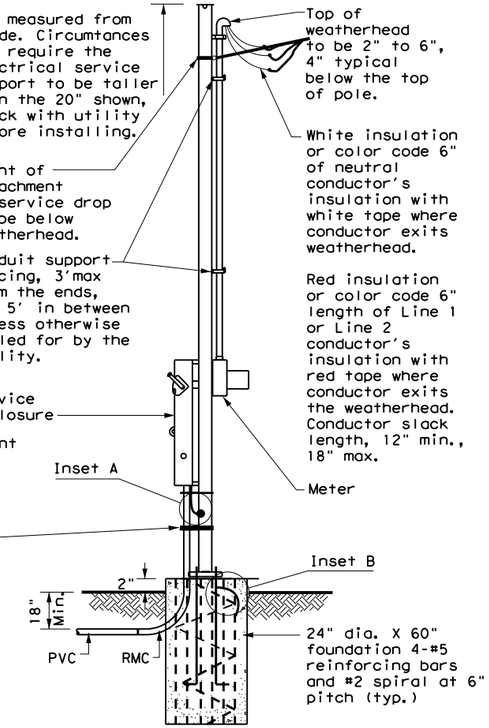

WITHOUT SAFETY SWITCH

SERVICE SUPPORT TYPE SP (O) - OVERHEAD SERVICE

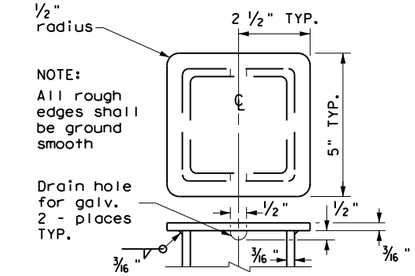

POLE TOP PLATE

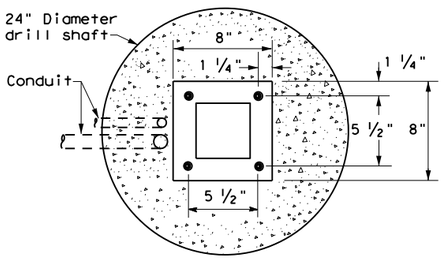

BASE PLATE DETAIL

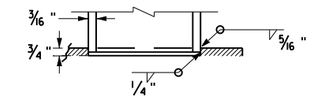

BOTTOM OF POLE

SERVICE SUPPORT TYPE SF & SP

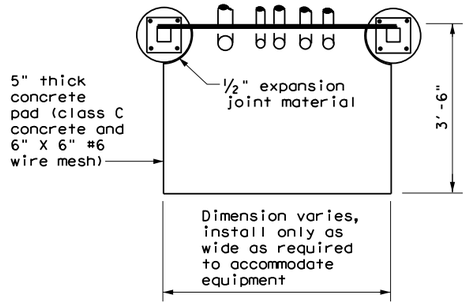

TOP VIEW

SERVICE SUPPORT TY SF (O) & SF (U)

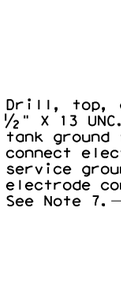

FRONT VIEW
INSET A

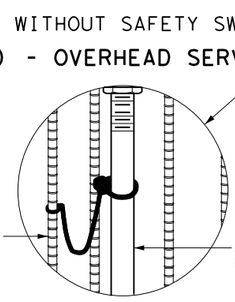

INSET B

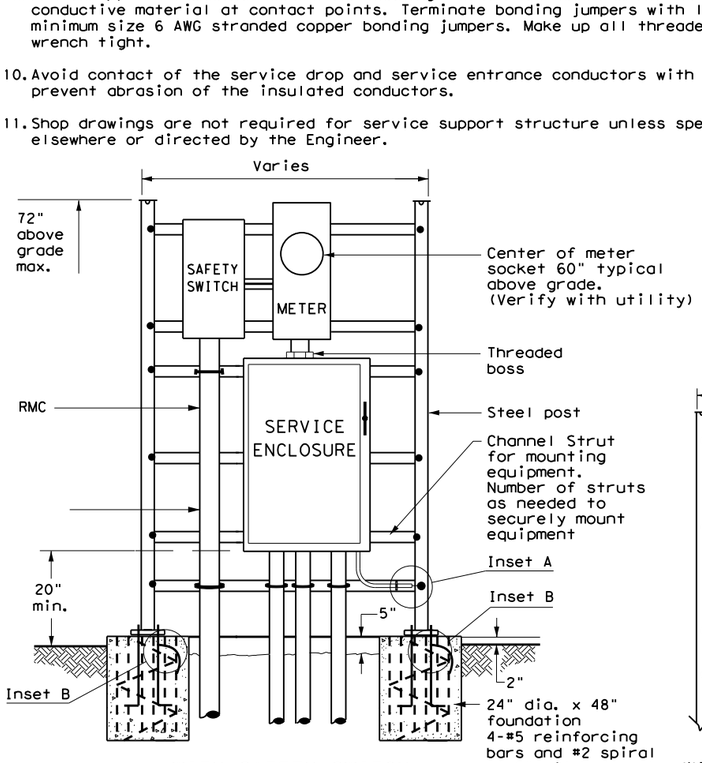

WITH SAFETY SWITCH
FRONT VIEW

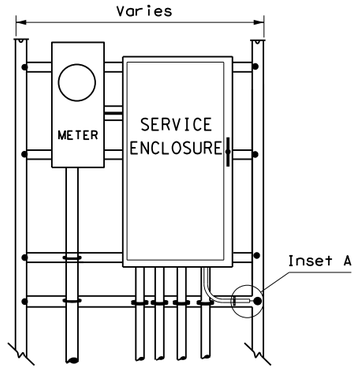

WITHOUT SAFETY SWITCH

SERVICE SUPPORT TYPE SF(U) - UNDERGROUND SERVICE

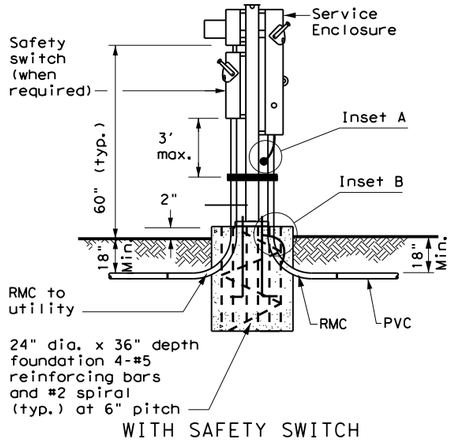

WITH SAFETY SWITCH

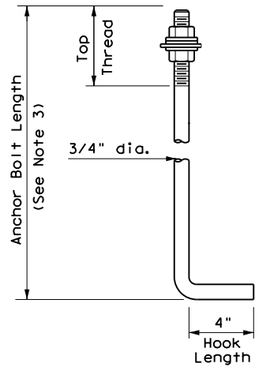

HOOKED ANCHOR DETAIL

SERVICE SUPPORT TYPE SP(U) - UNDERGROUND SERVICE

SHEET 1 OF 1

Texas Department of Transportation

Traffic Operations Division Standard

ELECTRICAL DETAILS SERVICE SUPPORT TYPES SF & SP

ED(7)-14

FILE: ed7-14.dgn	DN: TxDOT	CK: TxDOT	DW: TxDOT	CK: TxDOT
©TxDOT October 2014	CONT	SECT	JOB	HIGHWAY
REVISIONS				
	DIST	COUNTY		SHEET NO.
		WILLIAMSON		35

71G

TRAFFIC SIGNAL NOTES

1. Do not pass luminaire conductors through the signal controller cabinet.
2. Include an equipment grounding conductor in all conduits throughout the electrical system. Bond all exposed metal parts to the grounding conductor.
3. Provide roadway luminaires, when required, in accordance with the material and construction sections of Item 610, "Roadway Illumination Assemblies," except for performance testing of luminaires. Test installed roadway luminaires for proper operation as a part of the associated traffic signal system test.
4. If internally illuminated street name signs are approved for use, ground the fixture to the pole with a 12 AWG green XHHW conductor.
5. Bond anchor bolts to rebar cage in two locations using #3 bars or 6 AWG stranded copper conductors. Use listed mechanical connectors rated for embedment in concrete. See TXDOT standard TS-FD for further details.
6. Drill and tap signal poles for ½ in. X 13 UNC tank ground fitting. Provide and install tank ground fitting 4 in. to 6 in. directly below electrical service enclosure. Provide properly sized hole through the bottom of the enclosure for the service grounding electrode conductor. Connect the electrical service grounding electrode conductor to the tank ground fitting. Ensure electrical service grounding electrode conductor is as short and straight as possible from the enclosure to the tank ground fitting. See Inset A detail for further information. Size service entrance conduit and branch circuit conduit as shown in the plans.
7. Mount electrical service enclosure and meter to signal pole with stainless steel bands. Ensure bands are a minimum width of ¾ in. Secure enclosures to bands using two-bolt brackets. Install brackets near top and bottom of each enclosure. Install properly sized stainless steel washers on each bolt in the enclosure. Band or drill and tap properly sized stand-off straps to signal pole for attaching conduit.
8. Conduct pull tests and insulation resistance tests on all illumination and power conductors as required in Item 620 "Electrical Conductors" and ED(3). To prevent electronics damage, do not conduct insulation resistance tests on traffic signal cables after termination.
9. Lock all enclosures and bolt down all ground box covers before applying power to the signal installation.
10. Terminate conduits entering the top of enclosures with a conduit-sealing hub or threaded boss such as meter hub. Install a grounding bushing on all metal conduits not connected to conduit-sealing hub or threaded boss. Bond the grounding bushing to the ground bus with a bonding jumper. Seal all conduits entering enclosures with duct seal or expanding foam. Do not use silicone to seal conduit ends.
11. For all conduits, ensure the burial depth is a minimum of 18". Ensure the minimum burial depth for conduit placed under a roadway is 24".

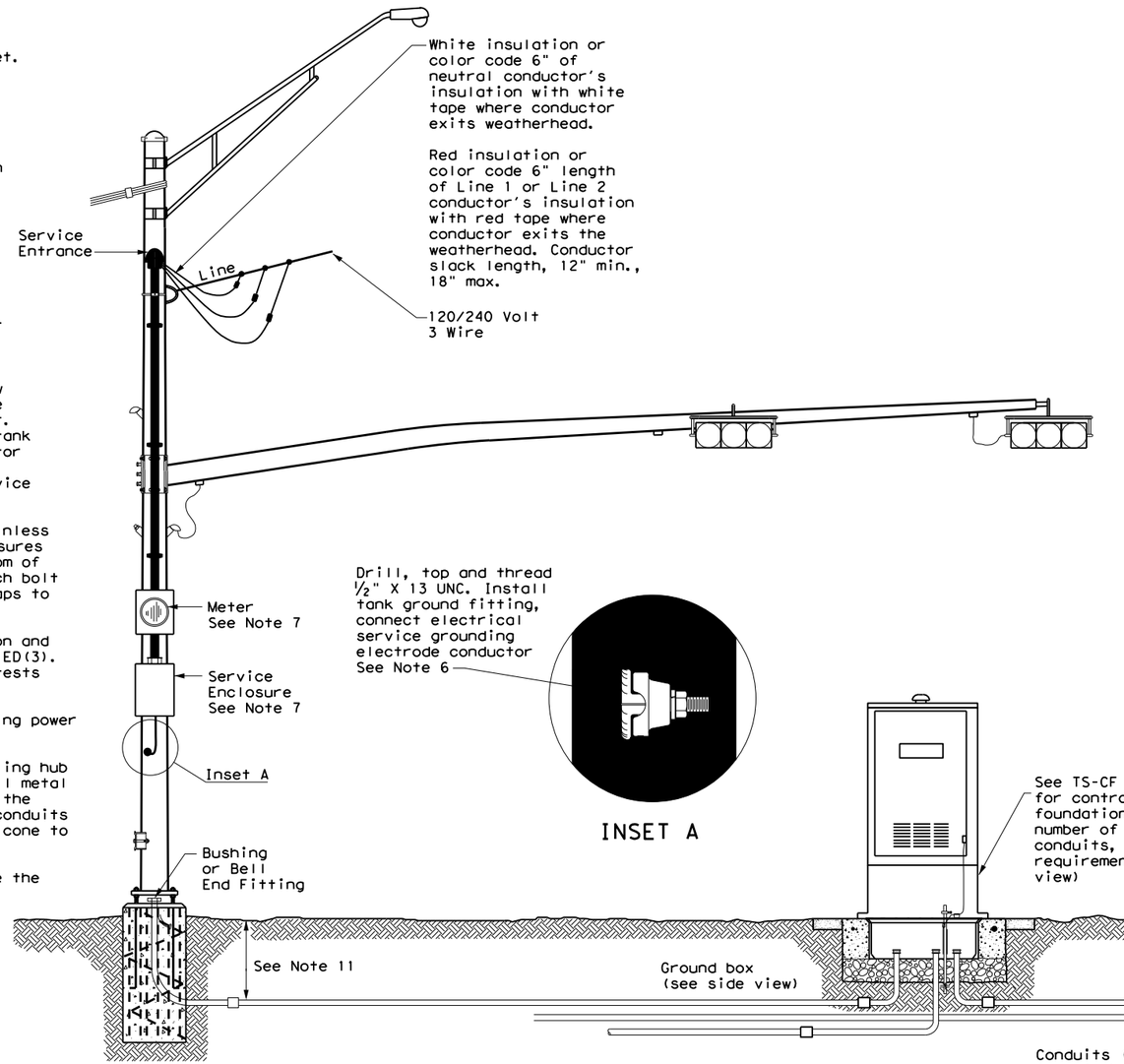

SIGNAL POLE WITH SERVICE

Type T electrical service mounted on signal pole shown as an example. See electrical details, layout sheets, and electrical service data chart for additional details.

INSET A

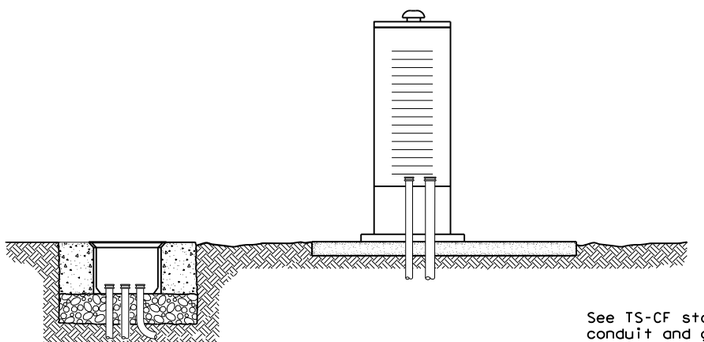

SIGNAL CONTROLLER SIDE VIEW

See TS-CF standard for conduit and grounding requirements. See layout sheets for ground box locations and any additional conduits that are required.

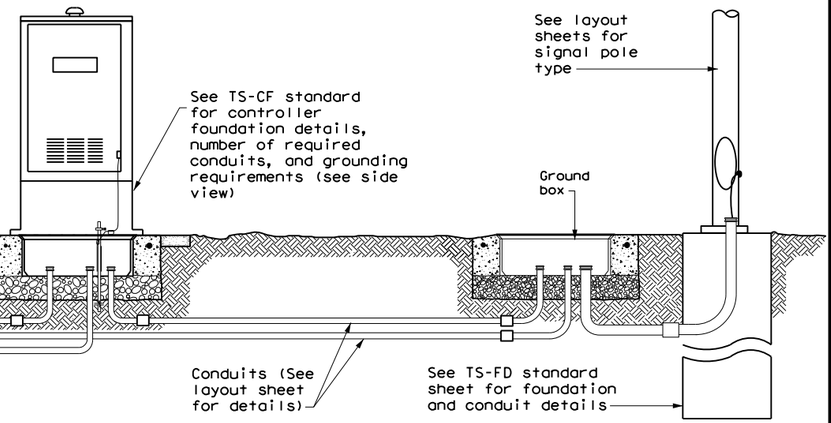

SIGNAL CONTROLLER FRONT VIEW

SIGNAL POLE

SHEET 1 OF 1

Texas Department of Transportation — Traffic Operations Division Standard

ELECTRICAL DETAILS TYPICAL TRAFFIC SIGNAL SYSTEM DETAILS

ED(8)-14

FILE: ed8-14.dgn	DN: TxDOT	CK: TxDOT	DW: TxDOT	CK: TxDOT
©TxDOT October 2014	CONT	SECT	JOB	HIGHWAY
REVISIONS				
	DIST	COUNTY		SHEET NO.
		WILLIAMSON		36

71H

DISCLAIMER:
The use of this standard is governed by the "Texas Engineering Practice Act". No warranty of any kind is made by TxDOT for any purpose whatsoever. TxDOT assumes no responsibility for the conversion of this standard to other formats or for incorrect results or damages resulting from its use.

DATE: 1/9/2025
FILE: pw:\\jmt-pw.bentley.com:jmt-pw-01\Documents\Projects\2022\22-01219-001\Design\ed8-14.dgn

DISCLAIMER:
The use of this standard is governed by the "Texas Engineering Practice Act". No warranty of any kind is made by TxDOT for any purpose whatsoever. TxDOT assumes no responsibility for the conversion of this standard to other formats or for incorrect results or damages resulting from its use.

DATE: 1/9/2025
FILE: pw:\\jmt-pw.bentley.com:jmt-pw-01\Documents\Projects\2022\22-01219-001\Design\Design Standard Sheets\ED10-14.dgn

TIMBER POLE (TP) SERVICE SUPPORT NOTES

1. Ensure electrical service support is a class 5 treated timber pole as per Item 627 "Treated Timber Poles." Embed timber pole to depth required in Item 627.
2. Conduit and electrical conductors attached to the electrical service pole and underground within 12 in. of service pole are not paid for directly but are subsidiary to the electrial service.
3. Install pole-top mounted photocell (T) on north side of pole, or in service enclosure (E) as required. See Electrical Service Data chart in plan set.
4. Gain pole as required to provide flat surface for each channel. Gain timber pole to 5/8 in. max. depth and 1 7/8 in. max. height. Gain pole in a neat and workmanlike manner.
5. Mount meter and service equipment on stainless steel or galvanized channel (Unistrut, Kindorf, or equal). Provide channel sized 1 in. to 3 3/4 in. maximum depth, and 1½ in. to 1⅝ in. maximum width. File smooth the cut ends of galvanized channel and paint with zinc rich paint before installing on pole. Secure each channel section to timber pole with two galvanized or SS lag bolts, ¼ in. minimum diameter by 1½ in. minimum length. Use a galvanized or SS flat washer on each lag bolt. Do not stack channel.
6. When excess length must be trimmed from poles, trim from the top end only.

(1) Class 5 pole, height as required

(2) Service drop from utility company (attached below weatherhead)

(3) Service conduit (RMC) and service entrance conductors - One Red, One Black, One White (See Electrical Service Data)

(4) Safety switch (when required)

(5) Meter (when required)

(6) Service enclosure

(7) 6 AWG bare grounding electrode conductor in ½ in. PVC to ground rod - extend ½ in. PVC 6 in. underground.

(8) 5/8 in. x 8 ft. Copper clad ground rod - drive ground rod to a depth of 2 in. to 4 in. below grade.

(9) RMC same size as branch circuit conduit.

(10) See pole-top mounted photocell detail on ED(5).

(11) When required by the serving utility provide bare 6 AWG copper conductor. Run wire from pole top to butt wrap or copper butt plate. Protect conductor with non-conductive material to a height of 8 ft. above finished grade.

(12) When required by utility, cut top of pole at an angle to enhance rain run off.

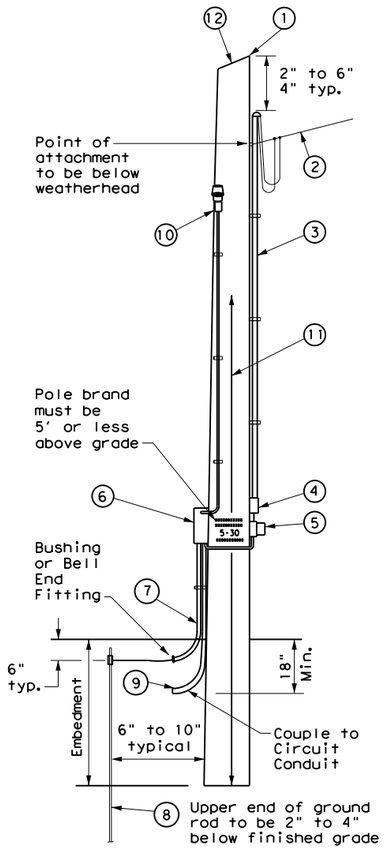

SERVICE SUPPORT TYPE TP (O)

GRANITE CONCRETE (GC) & OTHER CONCRETE (OC) NOTES

Ensure electrical service support structures bid as type Granite Concrete (GC) or Other Concrete (OC) meet the following requirements.

1. Provide GC and OC poles that meet the requirements of DMS 11080 "Electrical Services."
2. Provide prestressed concrete poles suitable for direct embedment into the ground without special foundations.
3. Verify poles are marked as required on DMS 11080. Location of marking should be approximately 4' above final grade. Use the two-point pickup locations when handling pole in horizontal position, and one-point pickup location for use in raising the pole to a vertical position. These marks are small but conspicuous.
4. Embed poles 42 in. or 10% of the length plus 2 ft., whichever is greater.
5. Ensure all installation details of services are in accordance with utility company specifications.
6. Install a one point rack or eye bolt bracket 6 inches to 12 inches below the weatherhead as an overhead service drop anchoring point for the electric utility.
7. Furnish and install galvanized or stainless steel channel strut 1 ½ in. or 1 5/8 in. wide by 1 in. up to 3 3/4 in. deep (Unistrut, Kindorf, B-line or equal). Attach channel strut with stainless steel concrete anchors (max. 1" depth), square U-bolts or back to back channel strut with long bolts, or other secure mounting as approved by the Engineer. Ensure bolts are galvanized in accordance with ASTM A153. Do not stack channel struts.
8. Backfill the holes thoroughly by tamping in 6 in. lifts. After tamping to grade, place additional backfill material in a 6 inch high cone around the pole to allow for settling. Use material equal in composition and density to the surrounding area. Backfilling will not be paid for directly but is subsidiary to various bid items.

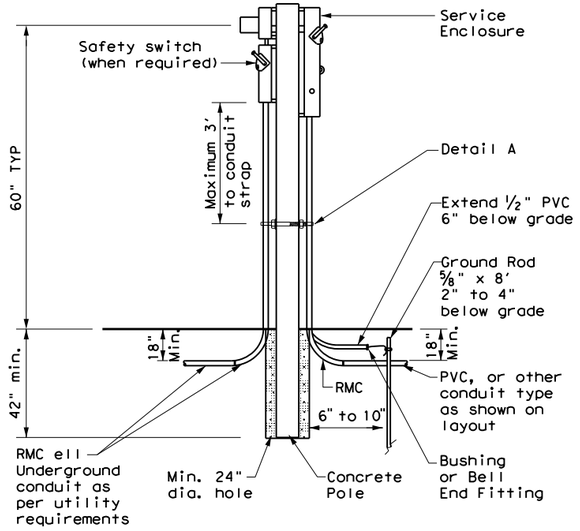

CONCRETE SERVICE SUPPORT

Underground (U)

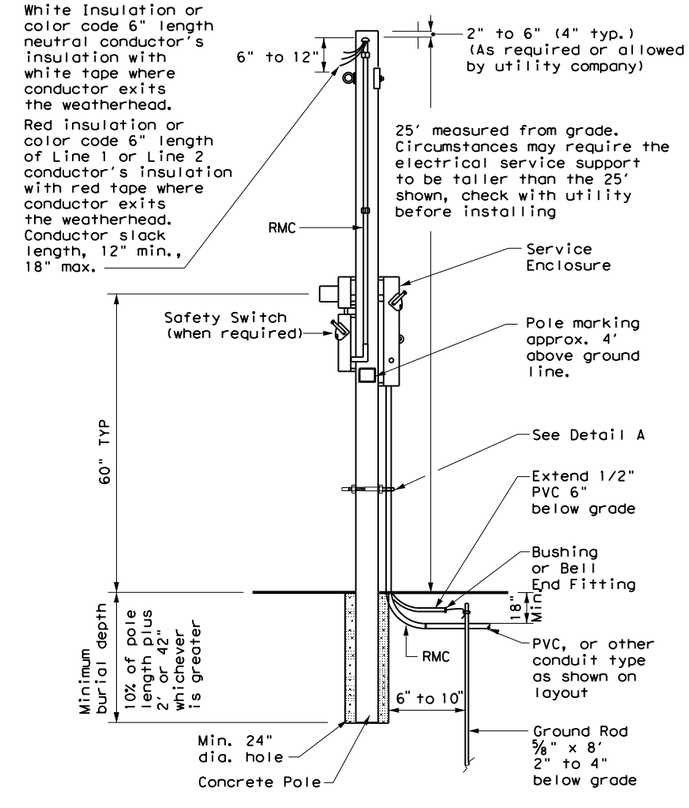

CONCRETE SERVICE SUPPORT

Overhead (O)

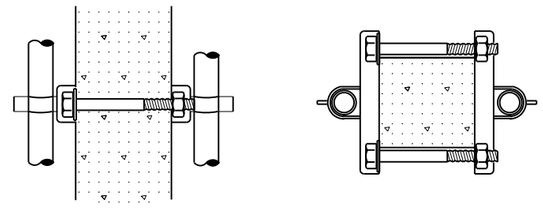

DETAIL A

See Note 7. Before installing channel that has been cut, file sharp edges and paint with zinc-rich paint. Ensure there is no paint splatter on the pole.

SHEET 1 OF 1

Texas Department of Transportation

Traffic Operations Division Standard

ELECTRICAL DETAILS SERVICE SUPPORT TYPES GC, OC, & TP

ED(10)-14

FILE: ed10-14.dgn	DN: TxDOT	CK: TxDOT	DW: TxDOT	CK: TxDOT
©TxDOT October 2014	CONT	SECT	JOB	HIGHWAY
REVISIONS	DIST	COUNTY		SHEET NO.
		WILLIAMSON		37

71K

DISCLAIMER:
The use of this standard is governed by the "Texas Engineering Practice Act". No warranty of any kind is made by TxDOT for any purpose whatsoever. TxDOT assumes no responsibility for the conversion of this standard to other formats or for incorrect results from its use.

DATE: 1/9/2025
FILE: pw:\\jmt-pw.bentley.com:jmt-pw-01\Documents\Projects\2022\22-01219-001\Design\Standards\ED11-14.dgn

DUCT CABLE & HDPE CONDUIT NOTES

1. Provide duct cable in accordance with Departmental Material Specification (DMS) 11060 "Duct Cable" and Item 622 "Duct Cable." Provide duct cable as listed on the Material Producer List (MPL) on the Department web site under "Roadway Illumination and Electrical Supplies" Item 622.

2. Provide High-Density Polyethylene (HDPE) conduit in accordance with DMS 11060 and Item 618, "Conduit." Provide HDPE as listed on the MPL on the Department web site under "Roadway Illumination and Electrical Supplies," Item 618.

3. Supply duct cable with a minimum 2 in. diameter, unless otherwise shown in the plans. Provide duct cable and HDPE conduit as shown by descriptive code or on the plans. Bend duct cable and HDPE conduit as recommended by the manufacturer, with a minimum bending radius of 26 in. for 2 in. duct. Follow manufacturers' recommendations when handling duct cable and HDPE conduit reels and during installation of duct cable and HDPE conduit.

4. Do not splice conductors within duct cable or HDPE conduit. Couple duct cable and HDPE entering a ground box or foundation to a PVC elbow. When galvanized steel RMC elbows are called for in the plans and any portion of the RMC elbow is buried less than 18" from possible contact, ground the RMC elbow.

5. Furnish and install duct cable with factory installed conductors, sized as shown in the plans and as required by the National Electrical Code (NEC). The NEC contains specific requirements for duct cable in Article, "Nonmetallic Underground Conduit with Conductors: Type NUCC."

6. When conduit casing is called for in the plans, extend duct cable or HDPE conduit through the conduit casing in one continuous length without connection to the casing.

7. Seal the ends of duct cable or HDPE conduit with duct seal, expandable foam, or other approved method after completing the pull tests required by Item 622.

8. Provide minimum cover of 24 in. under roadways, 18 in. in other locations, or as shown on the plans.

9. Furnish and install listed fittings to couple duct cable or HDPE conduit to other types of conduit. Duct cable and HDPE conduit may be field-threaded and spliced with PVC or RMC threaded couplings; connected with listed tie-wrap fittings; connected using listed coupling made of HDPE with stainless steel external banding clamps and locking rings; connected with approved electrofusion conduit couplings; or connected using an approved chemical fusion method using an epoxy or adhesive specifically designed for HDPE couplings and connectors all installed in accordance with their manufacturer's instructions. Do not use PVC glue on HDPE. Do not use water pipe fittings, or connect conduit with heat shrink tubing.

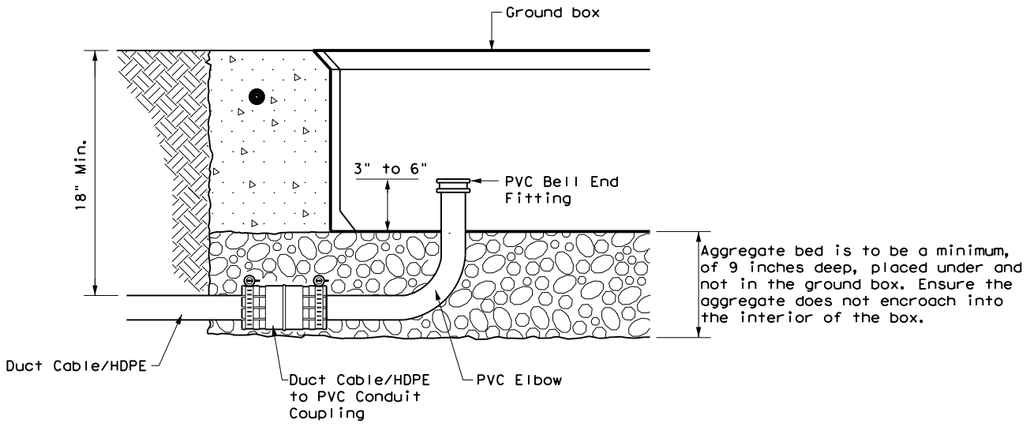

DUCT CABLE/HDPE AT GROUND BOX

When the upper end of an RMC Ell does not enter the ground box, it may be extended with a SCH-40 PVC conduit nipple and bell end, provided there is a minimum of 18" of cover over all parts of the elbow. If not, a rigid extension and ground bushing is required.

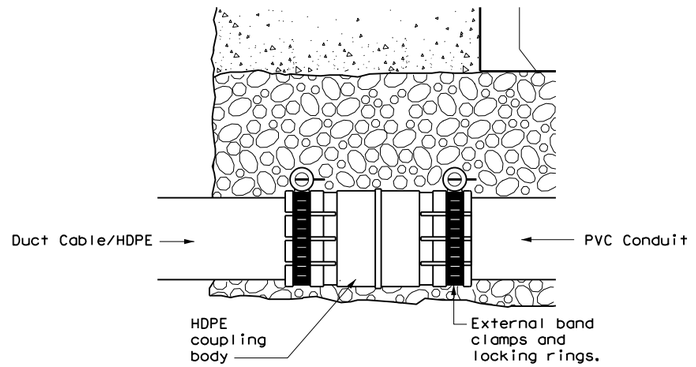

DUCT CABLE/HDPE TO PVC

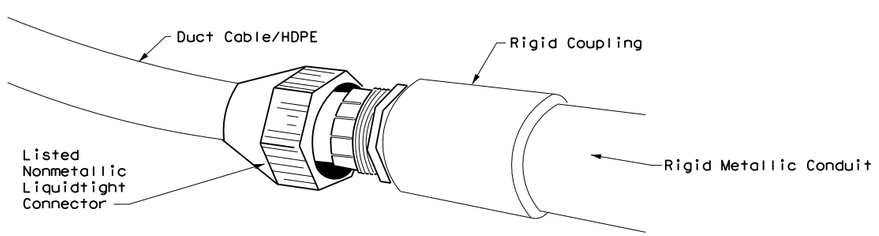

DUCT CABLE/HDPE TO RMC

Couple duct to conduit elbow at foundations. Ensure conductors extend into pole base. Do not splice conductors in conduit.

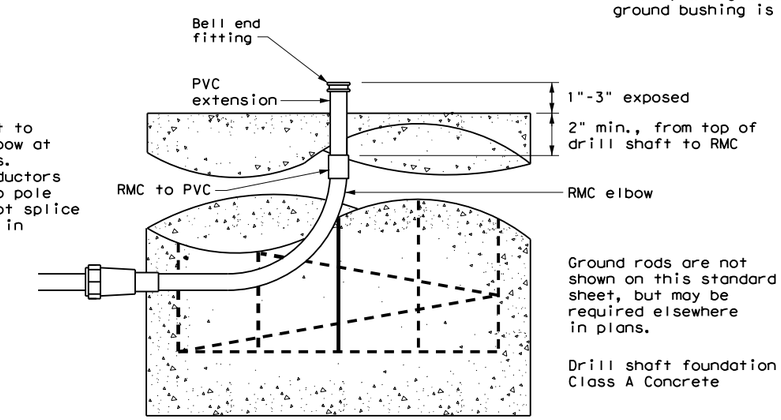

DUCT CABLE / HDPE AT FOUNDATION

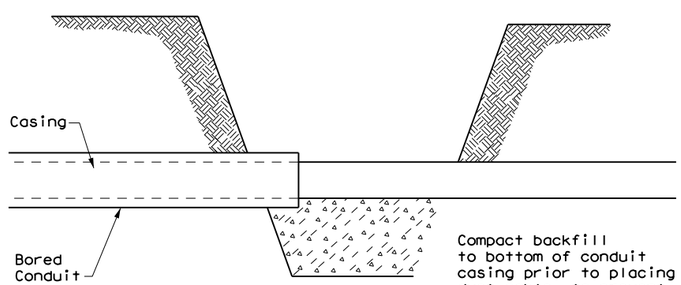

BORE PIT DETAIL

SHEET 1 OF 1

Texas Department of Transportation | Traffic Operations Division Standard

ELECTRICAL DETAILS DUCT CABLE/ HDPE CONDUIT

ED(11)-14

FILE: ed11-14.dgn	DN: TxDOT	CK: TxDOT	DW: TxDOT	CK: TxDOT
©TxDOT October 2014 REVISIONS	CONT	SECT	JOB	HIGHWAY
	DIST	COUNTY		SHEET NO.
		WILLIAMSON		38

71L

DISCLAIMER: The use of this standard is governed by the "Texas Engineering Practice Act". No warranty of any kind is made by TxDOT for purposes whatsoever. TxDOT assumes no responsibility for conversion of this Standard to other formats or for incorrect results or damages resulting from its use.

DATE: 1/9/2025
FILE: pw:\\jmt-pw.bentley.com:jmt-pw-01\Documents\Projects\2022\22-01219-001\Design\4 - Design\Plan Set\8. Traffic\Signal Standards\lum-a.dgn

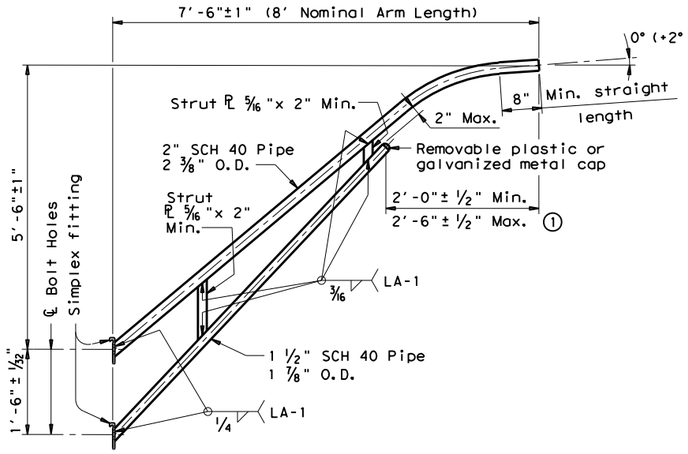

8-FOOT LUMINAIRE ARM

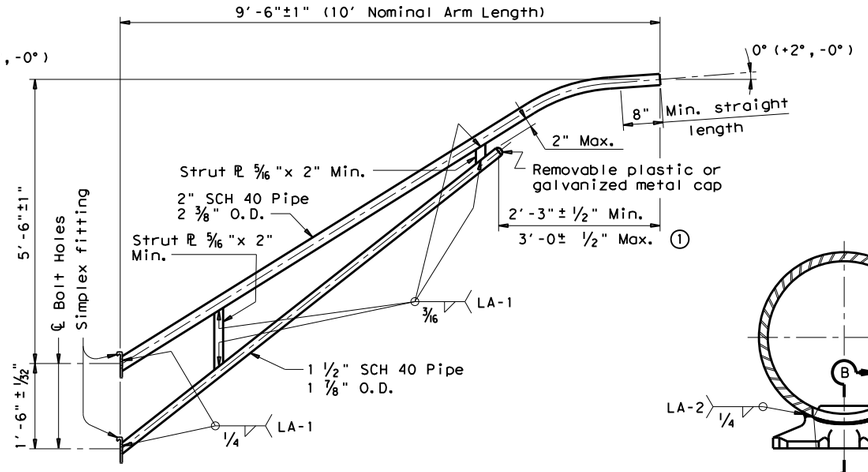

10-FOOT LUMINAIRE ARM

DIRECT ATTACHMENT DETAIL

MATERIALS	
Pole or Arm Simplex	ASTM A27 Gr.65-35 or A148 Gr.80-50, A576 Gr.1021 (3), or A36 (Arm only)
Arm Pipes	ASTM A53 Gr.B, A501, A1008 HSLAS-F Gr.50 (4), or A1011 HSLAS-F Gr.50 (4)
Arm Strut Plates (2)	ASTM A36, A572 Gr.50 (4), or A588
Misc.	ASTM designations as noted

(1) Dimensional limits are given to show acceptable variation in design. All of a Fabricator's production of a particular arm length shall have the same dimensions within specified tolerances.

(2) Any of the materials listed for plates may be used where the drawings do not specify a particular ASTM designation.

(3) A576 must be suitable for forging and also meet minimum tensile strength of 65 ksi, minimum yield of 35 ksi, and elongation in 2 inches of 22 percent.

(4) ASTM A572, A1008 HSLAS-F, and A1011 HSLAS-F may have higher yield strengths but shall not have less elongation than the grade indicated.

GENERAL NOTES:

Design conforms to 1994 AASHTO Standard Specifications for Structural Supports for Highway Signs, Luminaires, and Traffic Signals and Interim Revisions thereto. Design Wind Speed equals 90 mph plus a 1.3 gust factor. Arms are designed to support a 60 lb. luminaire having an effective projected area (actual area times drag coefficient) of 1.6 sq. ft.

Materials and fabrication shall be in accordance with Item 686, "Traffic Signal Pole Assemblies (Steel)" and with the details, dimensions, and weld procedures shown herein. Weld references call for preapproved weld procedures which the Fabricator must obtain prior to fabrication. In the absense of specified Fabricaton tolerances, dimensions shall be within the tolerances generally obtainable in normal fabrication practice.

Unless otherwise noted, all parts shall be galvanized after fabrication in accordance with Item 445, "Galvanizing".

Deviation from the details and dimensions shown herein require submission of shop drawings in accordance with Item 441, "Steel Structures". Alternate designs are not acceptable.

Each pole simplex fitting shall be supplied with 2 ASTM A325 bolts and 2 lock washers of the size specified. The bolts and lock washers shall be secured to the pole with the other hardware items called for in the plans. When clamp attachment is specified, the Fabricator shall ship the clamp assembly securely attached to the pole at the location shown on the plans.

If clamp assemblies are ordered without poles, the Fabricator shall ship one upper and one lower clamp assembly together in a single package, including all nuts and washers required for the clamps and simplex fittings.

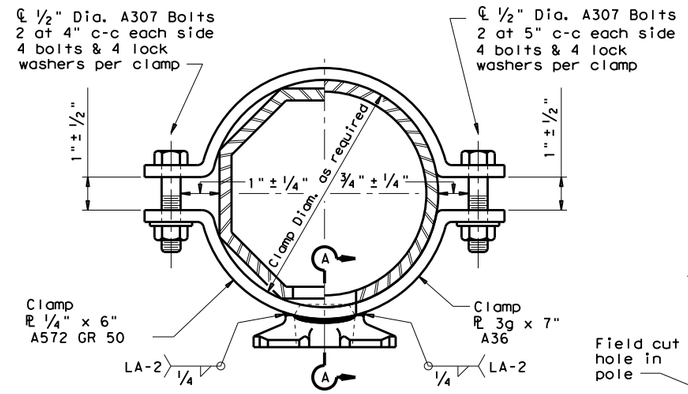

CLAMP ATTACHMENT DETAIL NO. 1 (HALF SECTION)

CLAMP ATTACHMENT DETAIL NO. 2 (HALF SECTION)

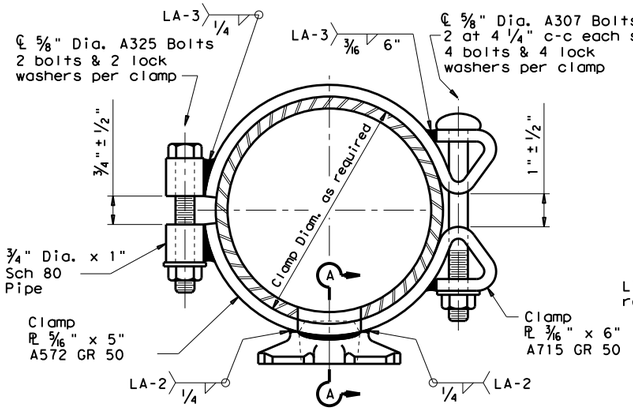

CLAMP ATTACHMENT DETAIL NO. 3 (HALF SECTION)

CLAMP ATTACHMENT DETAIL NO. 4 (HALF SECTION)

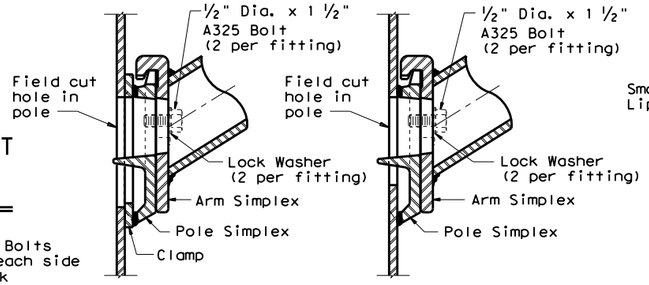

UPPER SIMPLEX FITTING

UPPER SIMPLEX FITTING

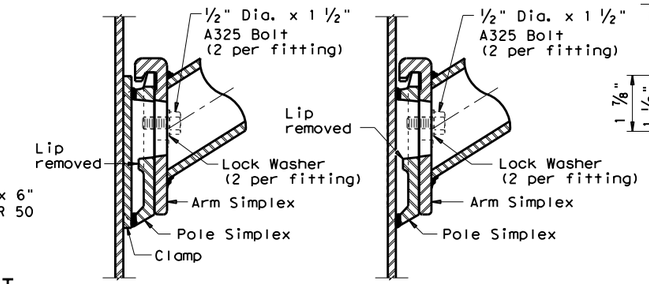

LOWER SIMPLEX FITTING

SECTON A-A

LOWER SIMPLEX FITTING

SECTON B-B

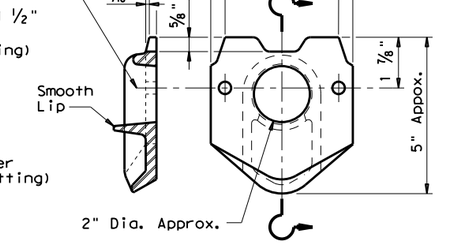

POLE SIMPLEX DETAIL

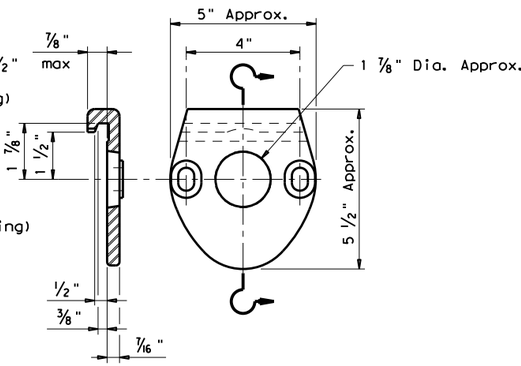

ARM SIMPLEX DETAIL

SHEET 1 OF 1

Texas Department of Transportation
Traffic Operations Division

STANDARD ASSEMBLY DRAWINGS FOR LUMINAIRE SUPPORT STRUCTURES

ARM DETAILS

LUM-A-12

© TxDOT August 1995

DN: LEH.	CK: JSY.	DW: LII.	CK: TEH.

REVISIONS
5-96
1-99
1-12

CONT	SECT	JOB	HIGHWAY

DIST	COUNTY	SHEET NO.
	WILLIAMSON	39

129

DISCLAIMER: The use of this standard is governed by the "Texas Engineering Practice Act". No warranty of any kind is made by TxDOT for any purpose whatsoever. TxDOT assumes no responsibility for errors or omissions in the use of this Standard to other formats or for incorrect results or damages resulting from its use.

DATE: 1/9/2025
FILE: pw:\\jmt-pw.bentley.com:jmt-pw-01\Documents\Projects\2022\22-01219-001\Design\4 - Design\Plan Set\8. Traffic\Signal Standards\mac.dgn

ARM SIZE D_1	ARM SIZE ϕ	A	B	C	D	E	CONN BOLT DIA
in.	in.	in.	in.	in.	in.	in.	in.
6.5	.179	12	9	9	6	1 3/4	1
7.5	.179	13	9	10	6	1 3/4	1
8.0	.179	14	10	11	7	2	1 1/4
9.0	.179	16	11	13	8	2	1 1/4
9.5	.179	17	12	14	9	2	1 1/4
9.5	.239	18	12	15	9	2	1 1/4
10.0	.239	18	12	15	9	2	1 1/2
10.5	.239	18	13	15	10	3	1 1/2
11.0	.239	18	13	15	10	3	1 1/2

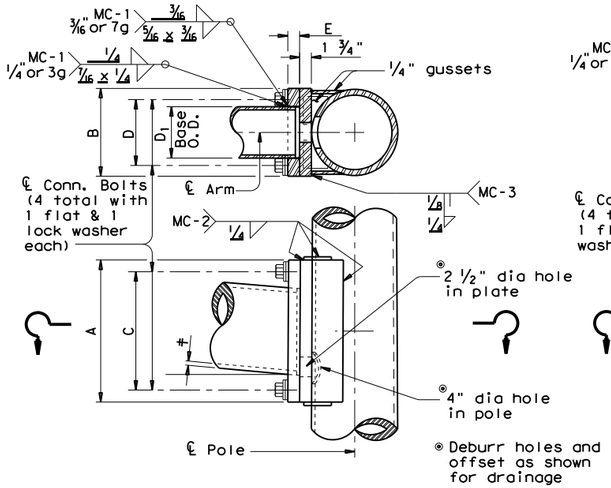

FIXED MOUNT DETAIL 1

ARM SIZE D_1	ARM SIZE ϕ	A	F	CONN. BOLTS No.	CONN. BOLTS Dia	PIN BOLTS No.	PIN BOLTS Dia
in.	in.	in.	in.	ea.	in.	ea.	in.
6.5	.179	12	6	4	1	2	5/8
7.5	.179	14	8	4	1	2	5/8
8.0	.179	14	8	4	1	2	5/8
9.0	.179	16	10	4	1	2	5/8
9.5	.179	18	12	4	1 1/4	3	5/8
9.5	.239	18	12	4	1 1/4	3	5/8
10.0	.239	18	12	4	1 1/4	3	5/8

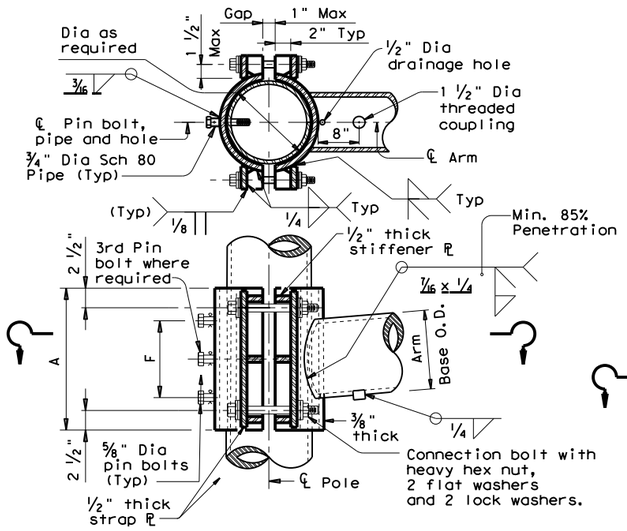

CLAMP-ON DETAIL 1

ARM SIZE D_1	ARM SIZE ϕ	A	B	C	D	E	CONN BOLT DIA
in.	in.	in.	in.	in.	in.	in.	in.
7.0	.179	11	11	8	8	1 3/4	1 1/4
7.5	.179	11	11	8	8	1 3/4	1 1/4
8.0	.179	11	11	8	8	2	1 1/4
9.0	.179	13	13	10	10	2	1 1/4
10.0	.179	13	13	10	10	2	1 1/4
9.5	.239	13	13	10	10	2	1 1/4
10.0	.239	14	14	11	11	2	1 1/2
11.0	.239	14	14	11	11	3	1 1/2
11.5	.239	14	14	11	11	3	1 1/2

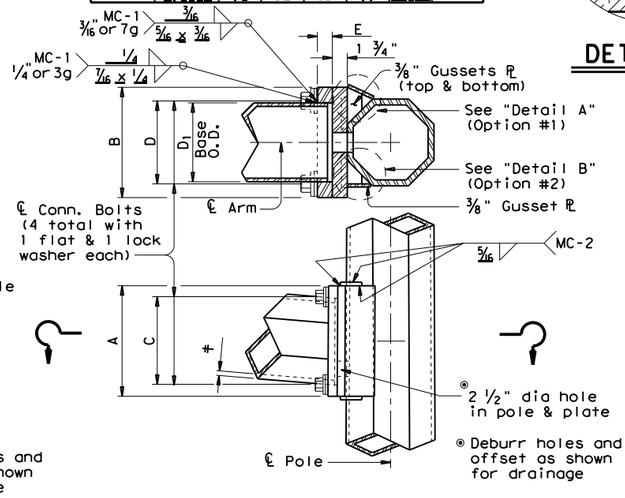

FIXED MOUNT DETAIL 2

ARM SIZE D_1	ARM SIZE ϕ	A	F	T	CONN. BOLTS No.	CONN. BOLTS Dia	PIN BOLTS No.	PIN BOLTS Dia
in.	in.	in.	in.	in.	ea.	in.	ea.	in.
7.0	.179	12	6	3/4	4	3/4	2	5/8
7.5	.179	14	8	3/4	4	3/4	2	5/8
8.0	.179	14	8	3/4	4	3/4	2	5/8
9.0	.179	16	10	7/8	4	1	2	5/8
10.0	.179	18	10	7/8	4	1	2	5/8
9.5	.239	18	10	1	6	1	3	5/8
10.0	.239	18	10	1	6	1	3	5/8

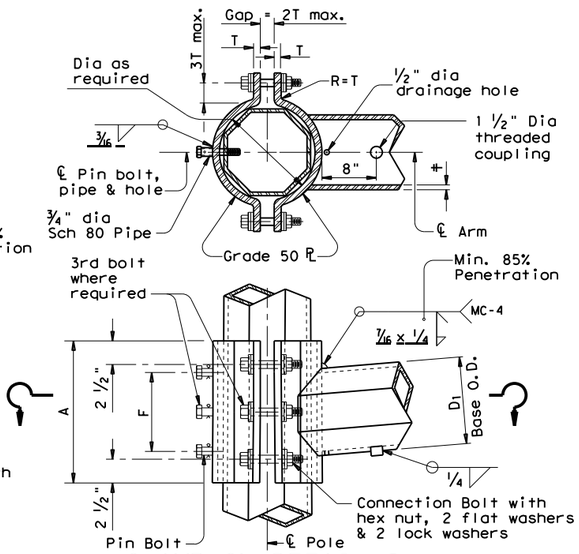

CLAMP-ON DETAIL 2

ARM SIZE D_1	ARM SIZE ϕ	A	F	CONN. BOLTS No.	CONN. BOLTS Dia	PIN BOLTS No.	PIN BOLTS Dia
in.	in.	in.	in.	ea.	in.	ea.	in.
6.5	.179	12	6	4	1	2	5/8
7.5	.179	14	8	4	1	2	5/8
8.0	.179	14	8	4	1	2	5/8
9.0	.179	16	10	4	1	2	5/8
9.5	.179	18	12	6	1	3	5/8
9.5	.239	18	12	6	1	3	5/8
10.0	.239	18	12	6	1	3	5/8

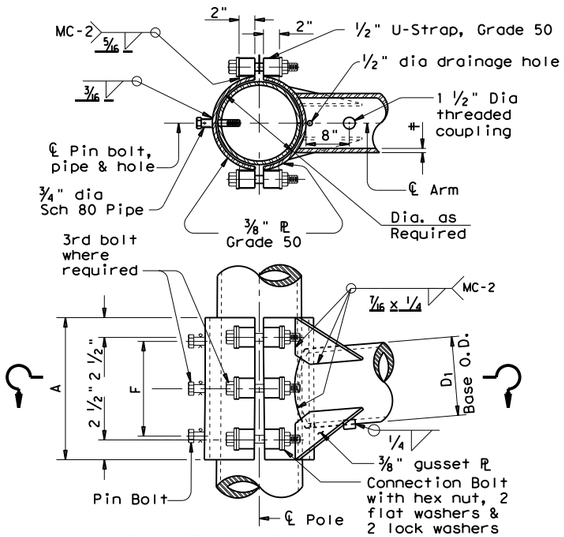

CLAMP-ON DETAIL 3

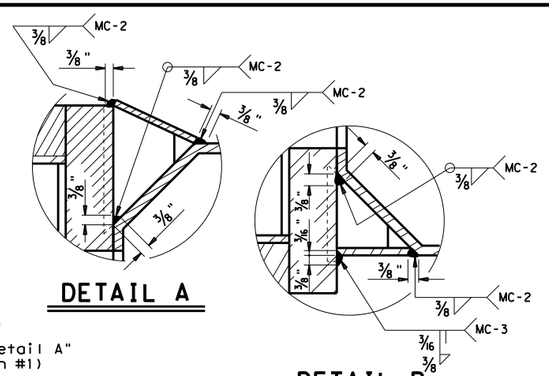

DETAIL A

DETAIL B

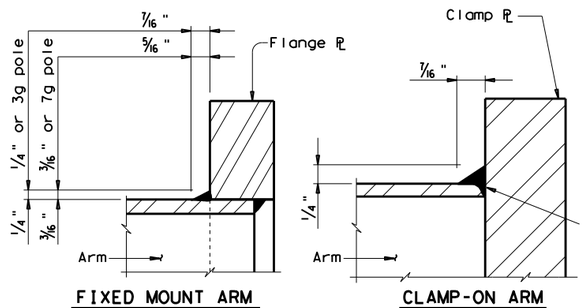

FIXED MOUNT ARM

CLAMP-ON ARM

ARM BASE WELD DETAILS

MATERIALS	
Round Shafts or Polygonal Shafts ①	ASTM A595 Gr.A, A588, A1008 HSLAS Gr.50 Class 2, A1011 HSLAS Gr.50 Class 2, A572 Gr.50 or A1011 SS Gr.50 ②
Plates ①	ASTM A36, A588, or A572 Gr.50
Connection Bolts	ASTM A325 or A449, except where noted
Pin Bolts	ASTM A325
Pipe ①	ASTM A53 Gr.B, A501, A1008 HSLAS-F Gr.50, A1011 HSLAS-F Gr.50
Misc. Hardware	Galvanized steel or stainless steel or as noted

① ASTM A572, A1008 HSLAS, A1011 HSLAS, A1008 HSLAS-F, A1011 HSLAS-F or A1011 SS may have higher yield strengths but shall not have less elongation than the grade indicated.

② ASTM A1011 SS Gr.50 material shall also have a minimum elongation of 18 percent in 8 inches or 23 percent in 2 inches. Material thickness in excess of those stipulated under A1011 SS will be acceptable providing the material meets all other A1011 SS requirements and the requirements of this item.

GENERAL NOTES:

Clamp-on details are used for the second arm on dual mast arm assemblies. A Maximum 1 1/2" wide vertical slotted hole shall be cut in the front clamp plate to facilitate drainage during galvanizing. The slot shall be centered behind the arm and shall be no longer than the arm diameter minus 1"

Fixed mount details are used for single mast arm assemblies and for the first arm on dual mast arm assemblies.

Where duplicate parts occur on a detail, welds shown for one part shall apply to all similar parts on the detail.

Pin bolts are required to prevent rotation of clamp-on arms under design wind forces.

NOTE:

Pin bolts shall be A325 with threads excluded from the shear plane. Pin bolt and 3/4" dia pipe shall have 3/16" dia holes for a 1/8" dia galvanized cotter pin. Back clamp plate shall be furnished with a 3/4" dia hole for each pin bolt. An 11/16" dia hole for each pin bolt shall be field drilled through the pole after arm orientations have been approved by the Engineer.

Texas Department of Transportation
Traffic Operations Division

STANDARD ASSEMBLY FOR TRAFFIC SIGNAL SUPPORT STRUCTURES

MAST ARM CONNECTIONS

MA-C-12

© TxDOT August 1995

DN: MS	CK: JSY	DW: MMF	CK: JSY
REVISIONS	CONT	SECT	JOB	HIGHWAY
5-96				
5-09				
1-12				
	DIST	COUNTY		SHEET NO.
		WILLIAMSON		40

126A

DISCLAIMER: The use of this standard is governed by the "Texas Engineering Practice Act". No warranty of any kind is made for any purpose whatsoever. TxDOT assumes no responsibility for the conversion of this Standard to other formats or for incorrect results or damages resulting from its use.

DATE: 1/9/2025
FILE: pw:\\jmt-pw.bentley.com:jmt-pw-01\Documents\Projects\2022\22-01219-001\Design\4 - Design\Plan Set\8. Traffic\Signal Standards\sma-80 (1).dgn

Arm Length	ROUND POLES					POLYGONAL POLES					Foundation Type
	D_B	D_{19}	D_{24}	D_{30}	① thk	D_B	D_{19}	D_{24}	D_{30}	① thk	
ft.	in.	in.	in.	in.	in.	in.	in.	in.	in.	in.	
20	10.5	7.8	7.1	6.3	.179	11.5	8.5	7.7	6.8	.179	30-A
24	11.0	8.3	7.6	6.8	.179	12.0	9.0	8.2	7.3	.179	30-A
28	11.5	8.8	8.1	7.3	.179	12.5	9.5	8.7	7.8	.179	30-A
32	12.5	9.8	9.1	8.3	.179	12.0	9.0	8.2	7.3	.239	30-A
36	12.0	9.3	8.6	7.8	.239	12.5	9.5	8.7	7.8	.239	36-A
40	12.0	9.3	8.6	7.8	.239	13.5	10.5	9.7	8.8	.239	36-A
44	12.5	9.8	9.1	8.3	.239	14.0	11.0	10.2	9.3	.239	36-A
48	13.0	10.3	9.6	8.8	.239	15.0	12.0	11.2	10.3	.239	36-A

Arm Length	ROUND ARMS					POLYGONAL ARMS				
	L_1	D_1	D_2	① thk	Rise	L_1	D_1	② D_2	① thk	Rise
ft.	ft.	in.	in.	in.		ft.	in.	in.	in.	
20	19.1	6.5	3.8	.179	1'-9"	19.1	7.0	3.5	.179	1'-8"
24	23.1	7.5	4.3	.179	1'-10"	23.1	7.5	3.5	.179	1'-9"
28	27.1	8.0	4.2	.179	1'-11"	27.1	8.0	3.5	.179	1'-10"
32	31.0	9.0	4.7	.179	2'-1"	31.0	9.0	3.5	.179	2'-0"
36	35.0	9.5	4.6	.179	2'-4"	35.0	10.0	3.5	.179	2'-1"
40	39.0	9.5	4.1	.239	2'-8"	39.0	9.5	3.5	.239	2'-3"
44	43.0	10.0	4.1	.239	2'-11"	43.0	10.0	3.5	.239	2'-6"
48	47.0	10.5	4.1	.239	3'-4"	47.0	11.0	3.5	.239	2'-9"

D_B = Pole Base O.D.
D_{19} = Pole Top O.D. with no Luminaire and no ILSN
D_{24} = Pole Top O.D. with ILSN w/out Luminaire
D_{30} = Pole Top O.D. with Luminaire
D_1 = Arm Base O.D.
D_2 = Arm End O.D.
L_1 = Shaft Length
L = Nominal Arm Length

① Thickness shown are minimums, thicker materials may be used.

② D_2 may be increased by up to 1" for polygonal arms.

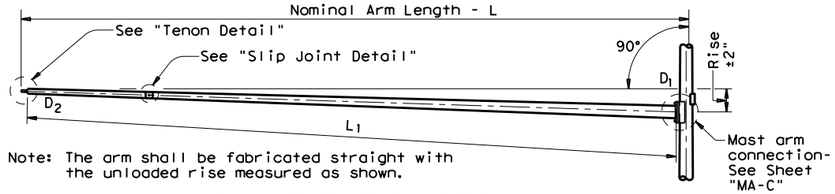

Note: The arm shall be fabricated straight with the unloaded rise measured as shown.

TRAFFIC SIGNAL ARM

(Fixed Mount)

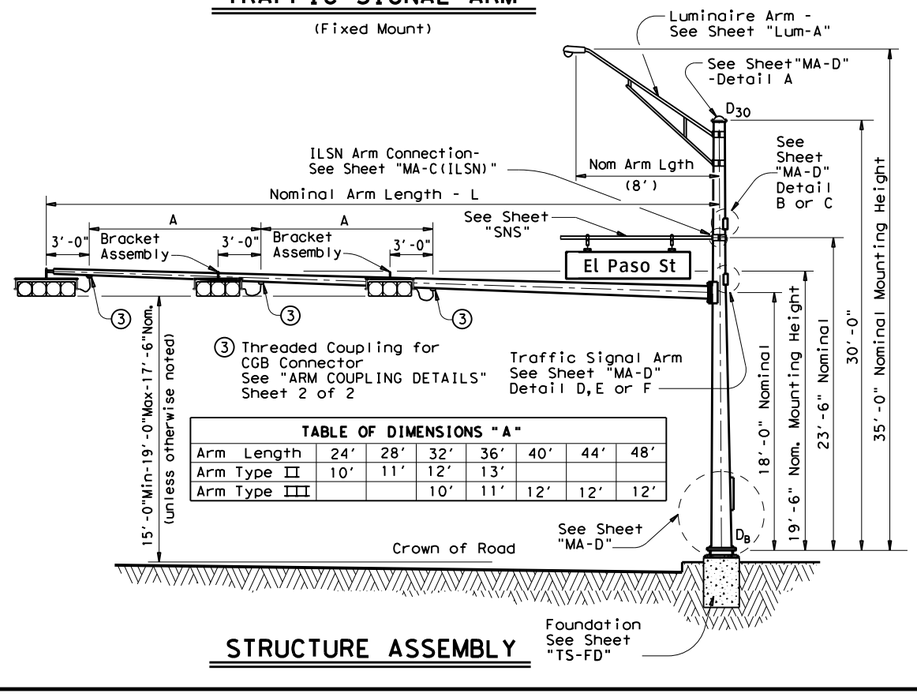

TABLE OF DIMENSIONS "A"

Arm Length	24'	28'	32'	36'	40'	44'	48'
Arm Type II	10'	11'	12'	13'			
Arm Type III			10'	11'	12'	12'	12'

STRUCTURE ASSEMBLY

SHIPPING PARTS LIST

Ship each pole with the following attached: enlarged hand hole, pole cap, fixed-arm connection bolts and washers and any additional hardware listed in the table.

Nominal Arm Length	30' Poles With Luminaire		24' Poles With ILSN		19' Poles With No Luminaire and No ILSN	
	Above hardware plus: One (or two if ILSN attached) small hand hole, clamp-on simplex		Above hardware plus one small hand hole		See note above	
ft	Designation	Quantity	Designation	Quantity	Designation	Quantity
20	20L-80		20S-80		20-80	
24	24L-80		24S-80		24-80	
28	28L-80		28S-80		28-80	
32	32L-80		32S-80		32-80	
36	36L-80	1	36S-80		36-80	
40	40L-80		40S-80		40-80	
44	44L-80	1	44S-80		44-80	
48	48L-80	2	48S-80		48-80	

Traffic Signal Arms (1 per Pole) Ship each arm with the listed equipment attached

Nominal Arm Length	Type I Arm (1 Signal)		Type II Arm (2 Signals)		Type III Arm (3 Signals)	
	1 CGB connector		1 Bracket Assembly and 2 CGB Connectors		2 Bracket Assemblies and 3 CGB Connectors	
ft	Designation	Quantity	Designation	Quantity	Designation	Quantity
20	20I-80					
24	24I-80		24II-80			
28	28I-80		28II-80			
32			32II-80		32III-80	
36			36II-80		36III-80	1
40					40III-80	
44					44III-80	1
48					48III-80	2

Luminaire Arms (1 per 30' pole)

Nominal Arm Length	Quantity
8' Arm	4

ILSN Arm (Max. 2 per pole) Ship with clamps, bolts and washers

Nominal Arm Length	Quantity
7' Arm	
9' Arm	4

Anchor Bolt Assemblies (1 per pole)

Anchor Bolt Diameter	Anchor Bolt Length	Quantity
1 ¾"	3'-10"	4
2"	4'-3"	

Each anchor bolt assembly consists of the following: Top and Bottom templates, 4 anchor bolts, 8 nuts, 8 flat washers, and 4 nut anchor devices (Type 2) per Standard Drawing "TS-FD".

Templates may be removed for shipment.

SHEET 1 OF 2

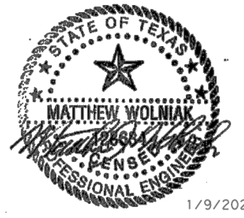

1/9/2025

Texas Department of Transportation
Traffic Operations Division

TRAFFIC SIGNAL SUPPORT STRUCTURES

SINGLE MAST ARM ASSEMBLY

(80 MPH WIND ZONE)

SMA-80(1)-12

© TxDOT August 1995

DN: MS	CK: JSY	DW: MMF	CK: JSY
CONT	SECT	JOB	HIGHWAY
DIST	COUNTY		SHEET NO.
	WILLIAMSON		41

REVISIONS
5-96
11-99
1-12

122A

DISCLAIMER: The use of this standard is governed by the "Texas Engineering Practice Act". No warranty of any kind is made by TxDOT for any purpose whatsoever. TxDOT assumes no responsibility for the conversion of this Standard to other formats or for incorrect results or damages resulting from its use.

DATE: 1/9/2025
FILE: pw:\\jmt-pw.bentley.com:jmt-pw-01\Documents\Projects\2022\22-01219-001\Design\4 - Design\Plan Set\8. Traffic\Signal Standards\sma-80 (1).dgn

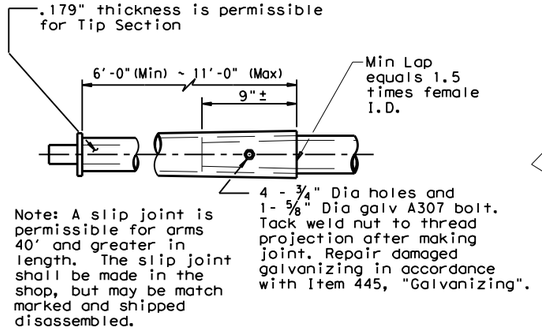

SLIP JOINT DETAIL

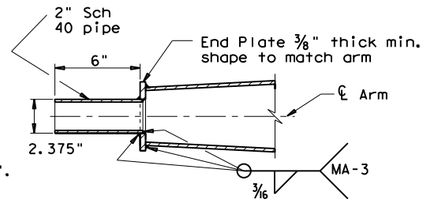

TENON DETAIL

Stainless steel bands (or Cables) and cast bracket as in "Astro-Brac", "Sky Bracket" or "Easy Bracket" with 1 ½" Dia Threaded Coupling.

BRACKET ASSEMBLY

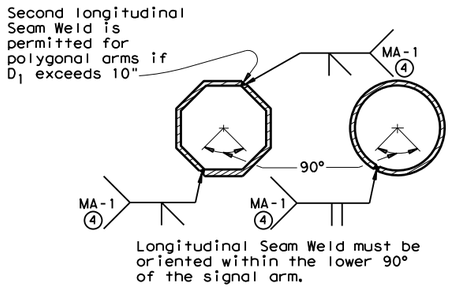

ARM WELD DETAIL

④ 60% Min. penetration 100% pemetration within 6" of circumferential base welds.

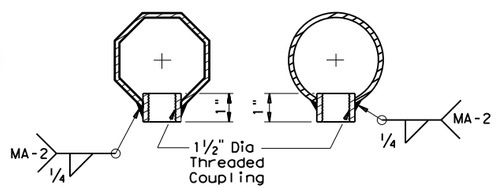

ARM COUPLING DETAILS

VIBRATION WARNING

Mast Arms of SMA and DMA structures and clamp-on Arms of LMA structures of approximately 40 ft or longer are subject to harmonic vertical vibrations in light wind conditions due to the aeroelastic characteristics of a few of the myriads of possible combinations of the following: signal numbers, weights and positions; existence/solidity of backplates; presence of additional attachments to the arm, such as signs and cameras; arm-wind orientation; and arm-pole stiffness.

Such vibrations may cause fatigue damage to the structure and may lead to galloping in moderate wind conditions which may further damage the structure and alarm the public. Tests have indicated that when wind is blowing toward the back side of signal heads having un-vented backplates attached the probability of unacceptable harmonic vibration and/or galloping is rather high.

If backplates are not required for improved visibility they should not be applied to the signal heads or, if they must be applied, they should be vented as a first and inexpensive measure to mitigate vibrations.

The traffic signal mast arms shall be visually inspected in 5 to 20 mph wind conditions after installation of signal heads and any attachments, including any required backpates. If vertical movements with a total excursion (maximum upward excursion to maximum downward excursion) of more than approximately 8" are observed at the arm tip, a damping plate shall be fitted to the arm. See "Damping Plate Mounting Details" on standard sheet, MA-DPD-10.

This visual inspection shall be repeated after each modification of the structure that could affect its aeroelastic response. Excessive vibrations shall not be allowed to continue for more than two days.

GENERAL NOTES:

Design conforms to 1994 AASHTO Standard Specifications for Structural Supports for Highway Signs, Luminaires, and Traffic Signals and Interim Specifications thereto. Design Wind Speed equals 80 mph plus a 1.3 gust factor.

Poles are designed to support one 8'-0" luminaire arm, one 9'-0" internally lighted street name sign and one traffic signal arm with a length as tabulated. The specified luminaire load applied at the end of the luminaire arm equals 60 lbs vertical dead load plus the horizontal wind load on an effective projected area of 1.6 sq ft. The specified internally lighted street name sign load applied 4.5 ft from the centerline of the pole equals 85 lbs vertical dead load plus horizontal wind load on an effective projected area of 11.5 sq ft. The specified signal load applied at the end of the traffic signal arm equals 180 lbs vertical dead load plus the horizontal wind load on an effective projected area of 32.4 sq ft (actual area times drag coefficient).

See Standard Sheet "MA-D" for pole details, "MA-C" for traffic signal arm connection details, "MA-C (ILSN)" for internally lighted street name sign arm connection details, "LUM-A" for luminaire arm and connection details, "SNS" for internally lighted street name sign details, and "TS-FD" for anchor bolt and foundation details. See "MA-C" for material specifications.

Fabrication shall be in accordance with Item 686, "Traffic Signal Pole Assemblies (Steel)" and with the details, dimensions, and weld procedures shown herein. Weld references call for preapproved weld procedures which the Fabricator must obtain prior to fabrication. Materials, fabrication tolerances, and shipping practices shall meet the requirements of this sheet and Item 686, "Traffic Signal Pole Assemblies (Steel)".

Unless otherwise noted, all parts shall be galvanized in accordance with Item 445, "Galvanizing", after fabrication.

Deviation from the details and dimensions shown herein require submission of shop drawings in accordance with Item 441, "Steel Structures". Alternate designs are not acceptable.

Texas Department of Transportation
Traffic Operations Division

TRAFFIC SIGNAL SUPPORT STRUCTURES

SINGLE MAST ARM ASSEMBLY

(80 MPH WIND ZONE)

SMA-80(2)-12

© TxDOT August 1995

DN: MS	CK: JSY	DW: MMF	CK: JSY

REVISIONS
5-96
1-12

CONT	SECT	JOB	HIGHWAY

DIST	COUNTY	SHEET NO.
	WILLIAMSON	42

122B

DISCLAIMER: The use of this standard is governed by the "Texas Engineering Practice Act". No warranty of any kind is made by TxDOT for any purpose whatsoever. TxDOT assumes no responsibility for the conversion of this Standard to other formats or for incorrect results or damages resulting from its use.

Arm Length	ROUND POLES D_B	D_{19}	D_{24}	D_{30}	① thk	POLYGONAL POLES D_B	D_{19}	D_{24}	D_{30}	① thk	Foundation Type
ft.	in.	in.	in.	in.	in.	in.	in.	in.	in.	in.	
20	12.0	9.3	8.6	7.8	.239	12.5	9.5	8.7	7.8	.239	36-A
24	12.0	9.3	8.6	7.8	.239	13.0	10.0	9.2	8.3	.239	36-A
28	12.0	9.3	8.6	7.8	.239	13.5	10.5	9.7	8.8	.239	36-A
32	13.0	10.3	9.6	8.8	.239	14.0	11.0	10.2	9.3	.239	36-A
36	13.5	10.8	10.1	9.3	.239	15.0	12.0	11.2	10.3	.239	36-A
40	14.0	11.3	10.6	9.8	.239	16.0	13.0	12.2	11.3	.239	36-B
44	14.5	11.8	11.1	10.3	.239	16.5	13.5	12.7	11.8	.239	36-B

Arm Length	ROUND ARMS L_1	D_1	D_2	① thk	Rise	POLYGONAL ARMS L_1	D_1	② D_2	① thk	Rise
ft.	ft.	in.	in.	in.		ft.	in.	in.	in.	
20	19.1	8.0	5.3	.179	1'-8"	19.1	8.0	3.5	.179	1'-7"
24	23.1	9.0	5.8	.179	1'-9"	23.1	9.0	3.5	.179	1'-8"
28	27.1	9.5	5.7	.179	1'-10"	27.1	10.0	3.5	.179	1'-9"
32	31.0	9.5	5.2	.239	1'-11"	31.0	9.5	3.5	.239	1'-10"
36	35.0	10.0	5.1	.239	2'-0"	35.0	10.0	3.5	.239	1'-11"
40	39.0	10.5	5.1	.239	2'-3"	39.0	11.0	3.5	.239	2'-1"
44	43.0	11.0	5.1	.239	2'-8"	43.0	11.5	4.0	.239	2'-3"

D_B = Pole Base O.D.
D_{19} = Pole Top O.D. with no Luminaire and no ILSN
D_{24} = Pole Top O.D. with ILSN w/out Luminaire
D_{30} = Pole Top O.D. with Luminaire
D_1 = Arm Base O.D.
D_2 = Arm End O.D.
L_1 = Shaft Length
L = Nominal Arm Length

① Thickness shown are minimums, thicker materials may be used.

② D_2 may be increased by up to 1" for polygonal arms.

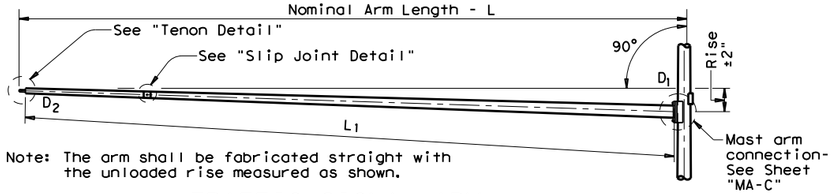

Note: The arm shall be fabricated straight with the unloaded rise measured as shown.

TRAFFIC SIGNAL ARM

(Fixed Mount)

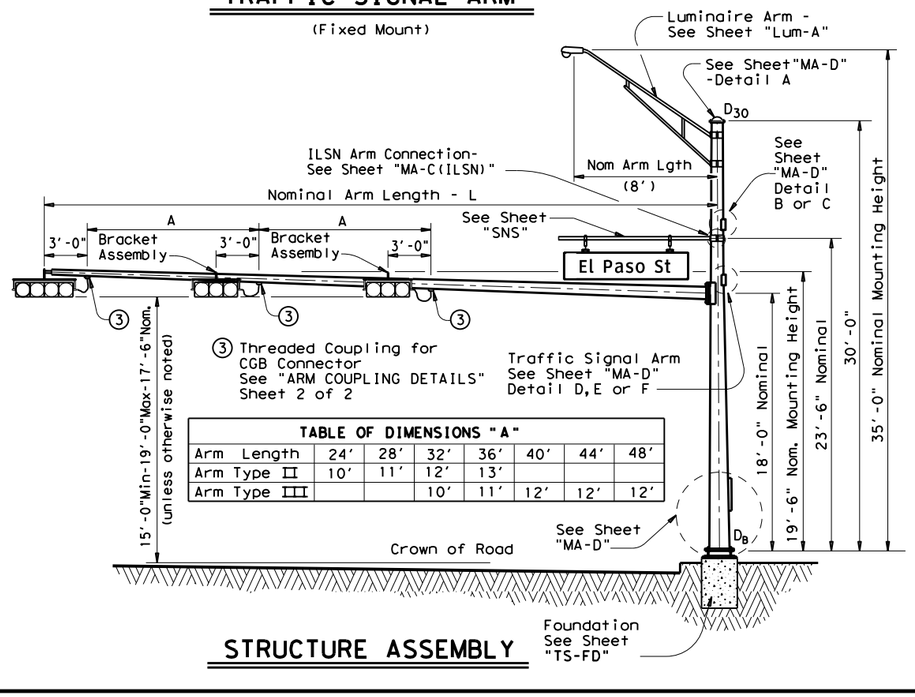

TABLE OF DIMENSIONS "A"

Arm Length	24'	28'	32'	36'	40'	44'	48'
Arm Type II	10'	11'	12'	13'			
Arm Type III			10'	11'	12'	12'	12'

STRUCTURE ASSEMBLY

SHIPPING PARTS LIST

Ship each pole with the following attached: enlarged hand hole, pole cap, fixed-arm connection bolts and washers and any additional hardware listed in the table.

Nominal Arm Length	30' Poles With Luminaire: Above hardware plus: One (or two if ILSN attached) small hand hole, clamp-on simplex		24' Poles With ILSN: Above hardware plus one small hand hole		19' Poles With No Luminaire and No ILSN: See note above	
ft	Designation	Quantity	Designation	Quantity	Designation	Quantity
20	20L-100		20S-100		20-100	
24	24L-100		24S-100		24-100	
28	28L-100		28S-100		28-100	
32	32L-100		32S-100		32-100	
36	36L-100		36S-100		36-100	
40	40L-100		40S-100		40-100	
44	44L-100		44S-100		44-100	

Traffic Signal Arms (1 per pole) Ship each arm with the listed equipment attached

Nominal Arm Length	Type I Arm (1 Signal): 1 CGB connector		Type II Arm (2 Signals): 1 Bracket Assembly and 2 CGB Connectors		Type III Arm (3 Signals): 2 Bracket Assemblies and 3 CGB Connectors	
ft	Designation	Quantity	Designation	Quantity	Designation	Quantity
20	20I-100					
24	24I-100		24II-100			
28	28I-100		28II-100			
32			32II-100		32III-100	
36			36II-100		36III-100	
40					40III-100	
44					44III-100	

Luminaire Arms (1 per 30' pole)

Nominal Arm Length	Quantity
8' Arm	

ILSN Arm (Max. 2 per pole) Ship with clamps, bolts and washers

Nominal Arm Length	Quantity
7' Arm	
9' Arm	

Anchor Bolt Assemblies (1 per pole)

Anchor Bolt Diameter	Anchor Bolt Length	Quantity
1 ½"	3'-4"	
1 ¾"	3'-10"	
2"	4'-3"	

Each anchor bolt assembly consists of the following: Top and Bottom templates, 4 anchor bolts, 8 nuts, 8 flat washers, and 4 nut anchor devices (Type 2) per Standard Drawing "TS-FD".

Templates may be removed for shipment.

SHEET 1 OF 2

Texas Department of Transportation
Traffic Operations Division

TRAFFIC SIGNAL SUPPORT STRUCTURES

SINGLE MAST ARM ASSEMBLY

(100 MPH WIND ZONE)

SMA-100(1)-12

© TxDOT August 1995

REVISIONS
5-96
11-99
1-12

DN: MS	CK: JSY	DW: MMF	CK: JSY
CONT	SECT	JOB	HIGHWAY
DIST	COUNTY		SHEET NO.
	WILLIAMSON		43

123A

DATE: 1/9/2025
FILE: pw:\\jmt-pw.bentley.com:jmt-pw-01\Documents\Projects\2022\22-01219-001\Design\4 - Design\Plan Set\8. Traffic\Signal Standards\sma-100 (1).dgn

DISCLAIMER: The use of this standard is governed by the "Texas Engineering Practice Act". No warranty of any kind is made by TxDOT for any purpose whatsoever. TxDOT assumes no responsibility for the conversion of this Standard to other formats or for incorrect results or damages resulting from its use.

DATE: 1/9/2025
FILE: pw:\\jmt-pw.bentley.com:jmt-pw-01\Documents\Projects\2022\22-01219-001\Design\4 - Design\Plan Set\8. Traffic\Signal Standards\sma-100 (1).dgn

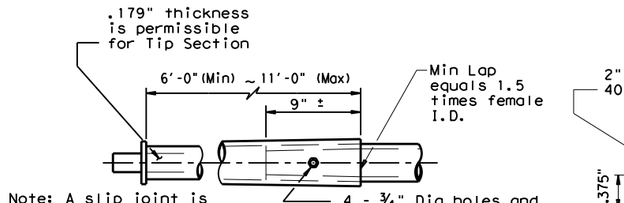

SLIP JOINT DETAIL

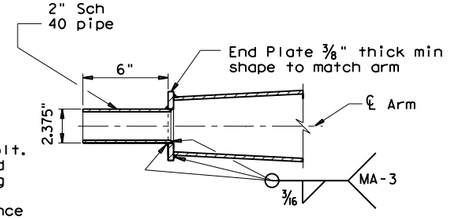

TENON DETAIL

Stainless steel bands (or Cables) and cast bracket as in "Astro-Brac", "Sky Bracket" or "Easy Bracket" with 1 ½" Dia Threaded Coupling.

BRACKET ASSEMBLY

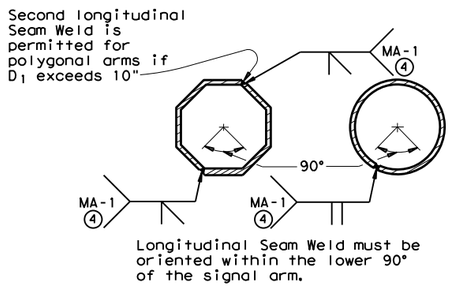

ARM WELD DETAIL

④60% Min. penetration
100% pemetration within 6" of circumferential base welds.

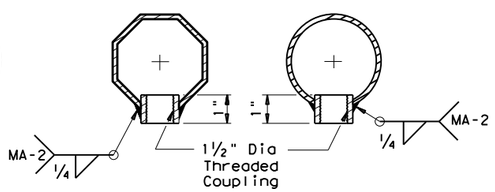

ARM COUPLING DETAILS

VIBRATION WARNING

Mast Arms of SMA and DMA structures and clamp-on Arms of LMA structures of approximately 40 ft or longer are subject to harmonic vertical vibrations in light wind conditions due to the aeroelastic characteristics of a few of the myriads of possible combinations of the following: signal numbers, weights and positions; existence/solidity of backplates; presence of additional attachments to the arm, such as signs and cameras; arm-wind orientation; and arm-pole stiffness.

Such vibrations may cause fatigue damage to the structure and may lead to galloping in moderate wind conditions which may further damage the structure and alarm the public. Tests have indicated that when wind is blowing toward the back side of signal heads having un-vented backplates attached the probability of unacceptable harmonic vibration and/or galloping is rather high.

If backplates are not required for improved visibility they should not be applied to the signal heads or, if they must be applied, they should be vented as a first and inexpensive measure to mitigate vibrations.

The traffic signal mast arms shall be visually inspected in 5 to 20 mph wind conditions after installation of signal heads and any attachments, including any required backpates. If vertical movements with a total excursion (maximum upward excursion to maximum downward excursion) of more than approximately 8" are observed at the arm tip, a damping plate shall be fitted to the arm. See "Damping Plate Mounting Details" on standard sheet, MA-DPD-10.

This visual inspection shall be repeated after each modification of the structure that could affect its aeroelastic response. Excessive vibrations shall not be allowed to continue for more than two days.

GENERAL NOTES:

Design conforms to 1994 AASHTO Standard Specifications for Structural Supports for Highway Signs, Luminaires, and Traffic Signals and Interim Specifications thereto. Design Wind Speed equals 100 mph plus a 1.3 gust factor.

Poles are designed to support one 8'-0" luminaire arm, one 9'-0" internally lighted street name sign and one traffic signal arm with a length as tabulated. The specified luminaire load applied at the end of the luminaire arm equals 60 lbs vertical dead load plus the horizontal wind load on an effective projected area of 1.6 sq ft. The specified internally lighted street name sign load applied 4.5 ft from the centerline of the pole equals 85 lbs vertical dead load plus horizontal wind load on an effective projected area of 11.5 sq ft. The specified signal load applied at the end of the traffic signal arm equals 180 lbs vertical dead load plus the horizontal wind load on an effective projected area of 32.4 sq ft (actual area times drag coefficient).

See Standard Sheet "MA-D" for pole details, "MA-C" for traffic signal arm connection details, "MA-C (ILSN)" for internally lighted street name sign arm connection details, "LUM-A" for luminaire arm and connection details, "SNS" for internally lighted street name sign details, and "TS-FD" for anchor bolt and foundation details. See "MA-C" for material specifications.

Fabrication shall be in accordance with Item 686, "Traffic Signal Pole Assemblies (Steel)" and with the details, dimensions, and weld procedures shown herein. Weld references call for preapproved weld procedures which the Fabricator must obtain prior to fabrication. Materials, fabrication tolerances, and shipping practices shall meet the requirements of this sheet and Item 686, "Traffic Signal Pole Assemblies (Steel)".

Unless otherwise noted, all parts shall be galvanized in accordance with Item 445, "Galvanizing", after fabrication.

Deviation from the details and dimensions shown herein require submission of shop drawings in accordance with Item 441, "Steel Structures". Alternate designs are not acceptable.

Texas Department of Transportation
Traffic Operations Division

TRAFFIC SIGNAL SUPPORT STRUCTURES

SINGLE MAST ARM ASSEMBLY

(100 MPH WIND ZONE)

SMA-100(2)-12

© TxDOT August 1995

DN: MS	CK: JSY	DW: MMF	CK: JSY

REVISIONS
5-96
1-12

CONT	SECT	JOB	HIGHWAY

DIST	COUNTY	SHEET NO.
	WILLIAMSON	44

123B

DISCLAIMER: The use of this standard is governed by the "Texas Engineering Practice Act". No warranty of any kind is made by TxDOT for any purpose whatsoever. TxDOT assumes no responsibility for the conversion of this standard to other formats or for incorrect results or damages resulting from its use.

DATE:
FILE:

TABLE OF DIMENSIONS for ILSN Support Arm Clamp-on Details 1, 2 and 3						
ILSN ARM SIZE	A	F	CONN. BOLTS		PIN BOLTS	
			No.	Dia	No.	Dia
	in.	in.	ea.	in.	ea.	in.
3 in. dia Schedule 40 Pipe	10	4	4	¾	2	⅝

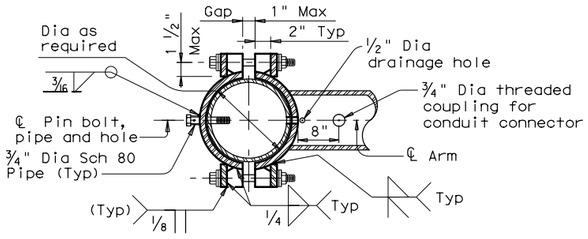

SECTION A-A

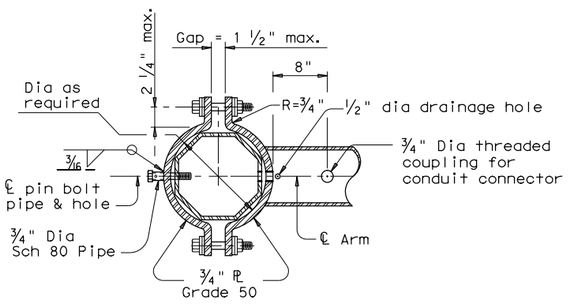

SECTION B-B

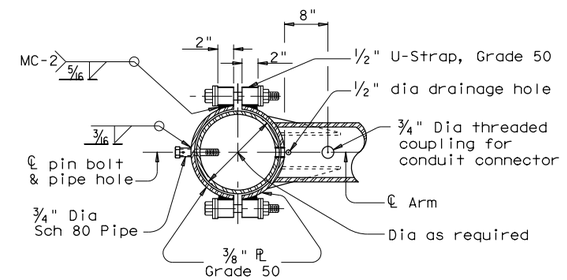

SECTION C-C

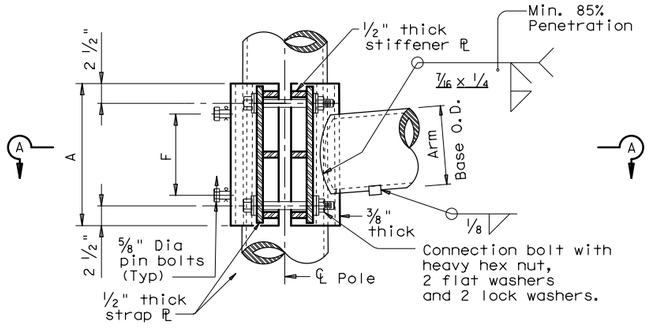

ILSN CLAMP-ON DETAIL 1

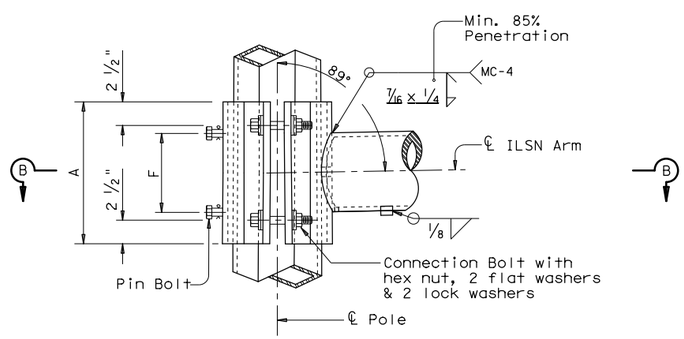

ILSN CLAMP-ON DETAIL 2

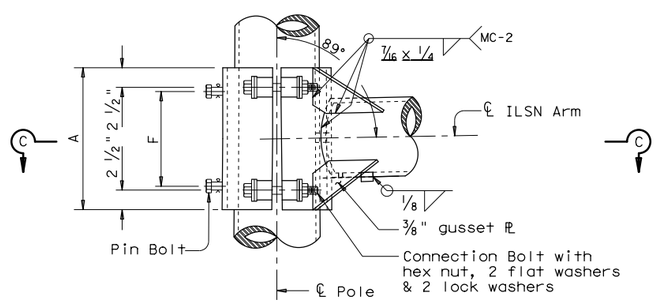

ILSN CLAMP-ON DETAIL 3

GENERAL NOTES:

Clamp-on details shall be used for ILSN support arm assemblies. A 1 ½" inch diameter hole shall be cut in the front clamp plate for wiring access. A matched hole shall be field drilled through the pole to provide wire access after arm is oriented. Deburr both holes.

Where duplicate parts occur on a detail, welds shown for one part shall apply to all similar parts on the details.

Pin bolts are required to prevent rotation of clamp-on arms under design wind forces.

NOTE:

Pin bolts shall be A325 with threads excluded from the shear plane. Pin bolt and ¾" dia pipe shall have 3/16" dia holes for a 1/8" dia galvanized cotter pin. Back clamp plate shall be furnished with a ¾" dia hole for each pin bolt. An 11/16" dia hole for each pin bolt shall be field drilled through the pole after arm orientations have been approved by the Engineer.

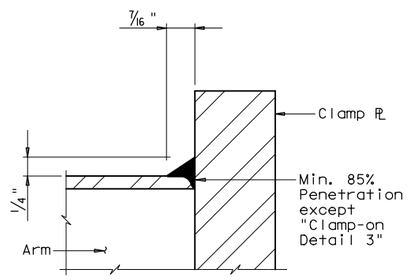

CLAMP-ON ARM

ARM BASE WELD DETAILS

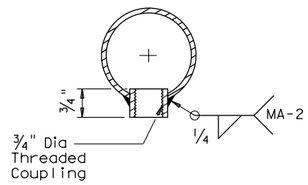

ILSN ARM COUPLING DETAIL

Texas Department of Transportation
Traffic Operations Division

STANDARD ASSEMBLY FOR TRAFFIC SIGNAL SUPPORT STRUCTURES

MAST-ARM CONNECTIONS

MA-C(ILSN)-12

© TxDOT August 1995

DN: MS	CK: JSY	DW: MMF	CK: JSY
CONT	SECT	JOB	HIGHWAY
DIST	COUNTY		SHEET NO.
	WILLIAMSON		45

REVISIONS
5-96
1-12

126B

DISCLAIMER:
The use of this standard is governed by the "Texas Engineering Practice Act". No warranty of any kind is made by TxDOT for any purpose whatsoever. TxDOT assumes no responsibility for the conversion of this standard to other formats or for incorrect results or damages resulting from its use.

ILSN SIGN

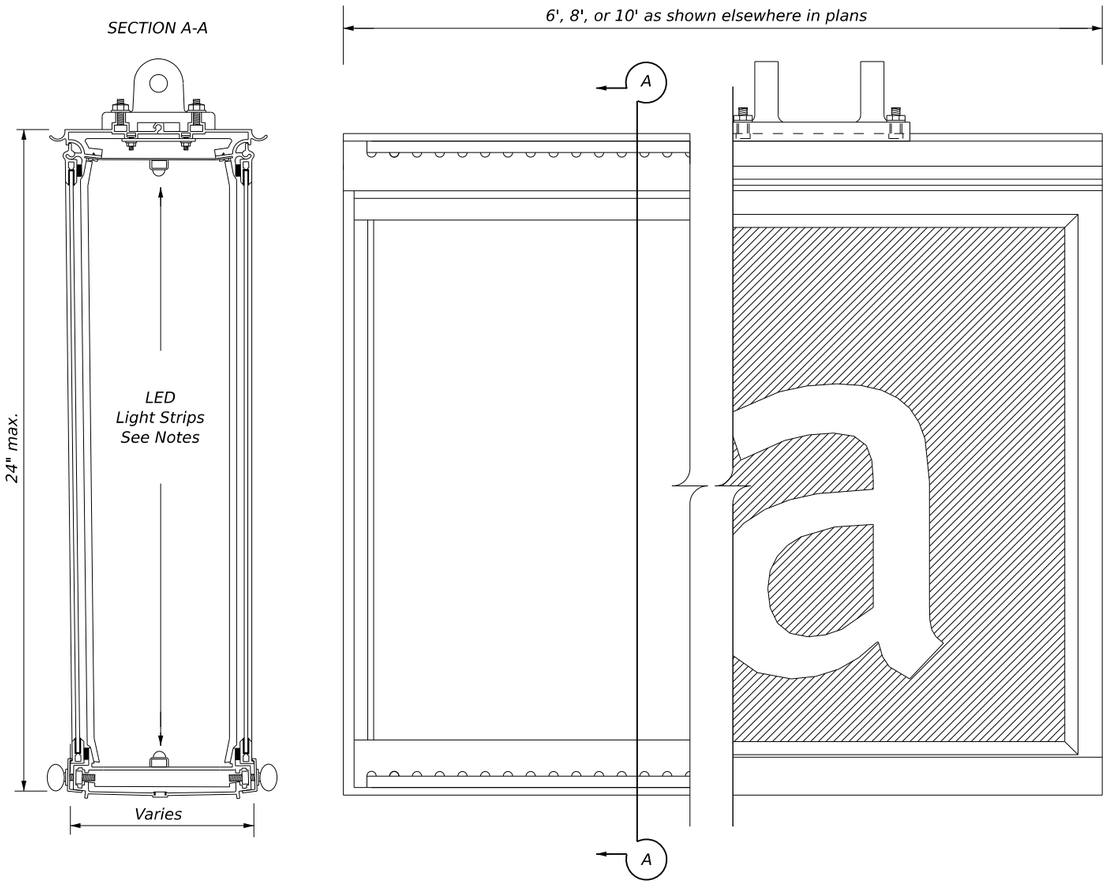

SIGN MOUNTING

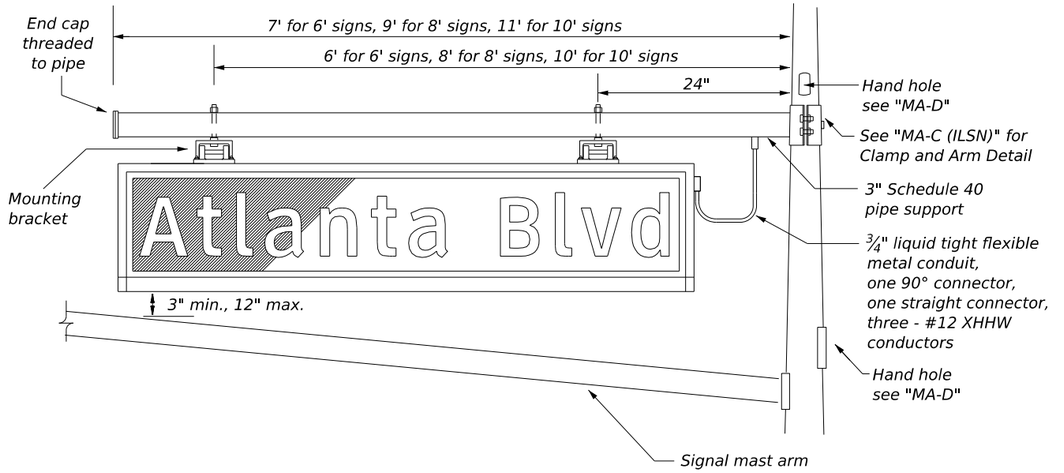

MOUNTING BRACKET

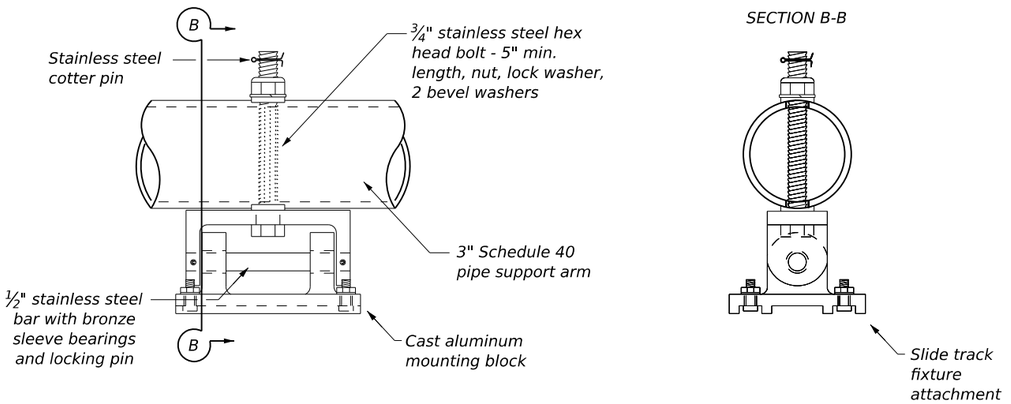

ILSN SIGN NOTES:

1. The maximum area of the sign shall not exceed 20 sq.ft.
2. Sign message shall be as shown elsewhere in the plans.
3. See Special Specification, "LED Internally Lighted Street Name Signs" for additional details.
4. Ensure letter font type and letter height are in accordance with the Standard Highway Sign Designs for Texas, D3-1 Overhead Mount.
5. Sign housing and LED configuration may vary by manufacturer.

ILSN SIGN BID ITEM DESCRIPTIONS

ILSN (X X)

INTERNALLY LIGHTED STREET NAME SIGN

SIGN LENGTH
- 6 = 6 ft.
- 8 = 8 ft.
- 10 = 10 ft.

FACES
- S = Single
- D = Double

3 1/30/2026 - REVISED ILSN STREET SIGNS

Texas Department of Transportation | Traffic Safety Division Standard

INTERNALLY LIGHTED STREET NAME (ILSN) SIGN

ILSN-25

FILE: ilsn-25.dgn	DN: TxDOT	CK: TxDOT	DW: TxDOT	CK: TxDOT
©TxDOT March 2025	CONT	SECT	JOB	HIGHWAY
REVISIONS				
8-95 3-25	DIST	COUNTY		SHEET NO.
				46

DATE:
FILE:

82

DISCLAIMER: The use of this standard is governed by the "Texas Engineering Practice Act". No warranty of any kind is made by TxDOT for any purpose whatsoever. TxDOT assumes no responsibility for errors or omissions in the conversion of this standard to other formats or for incorrect results or damages resulting from its use.

DATE:
FILE:

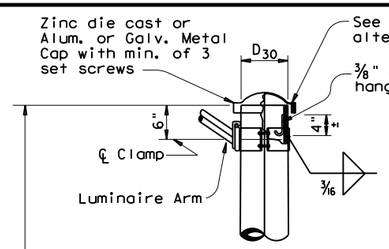

DETAIL A

(for pole with luminaire)

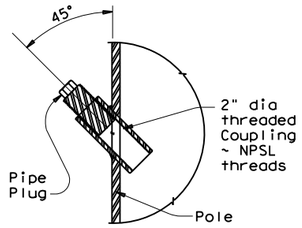

POLE COUPLING DETAIL

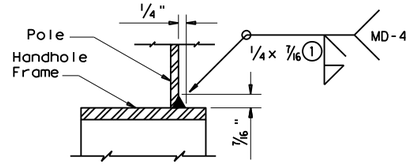

DETAIL G

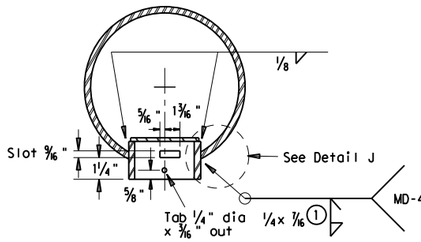

SECTION X-X

Opening for access compartment shall be no more than 1⁄16 inch wider than the access compartment itself.

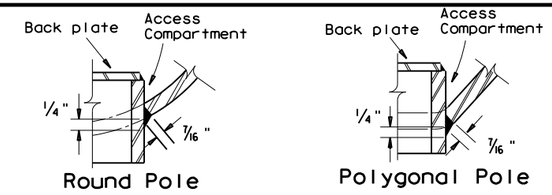

DETAIL J

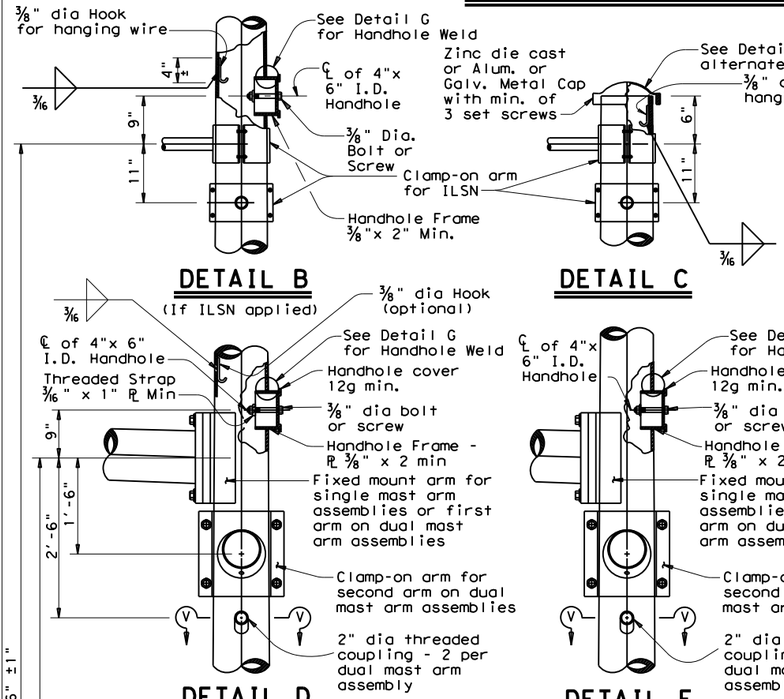

DETAIL B

DETAIL C

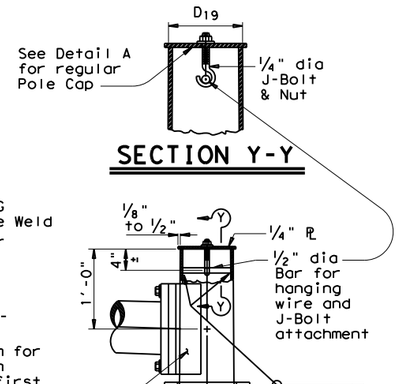

SECTION Y-Y

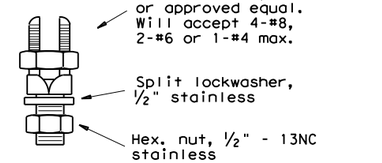

COPPER GROUND CONNECTOR

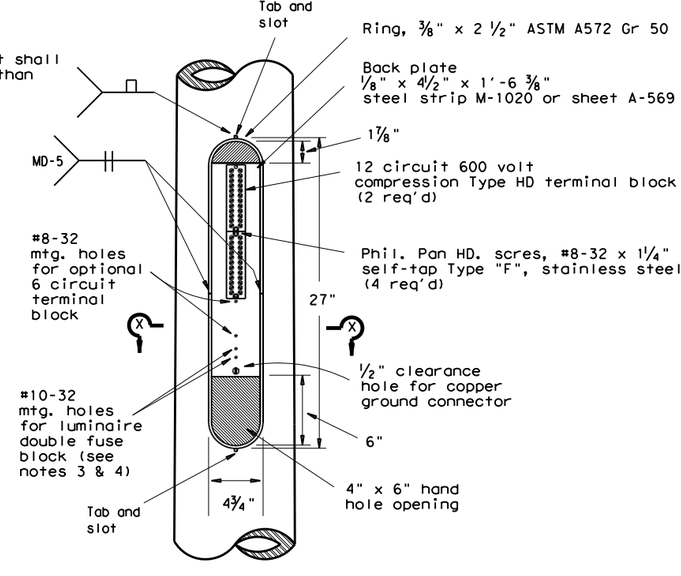

ACCESS COMPARTMENT

DETAIL D

(for 30' pole with luminaire and ILSN sign)

DETAIL E

(for 24' pole with ILSN sign and no luminaire)

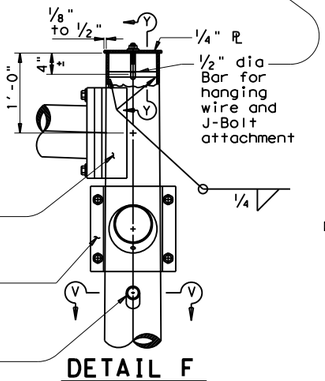

DETAIL F

(for 19' pole with no ILSN sign and no luminaire)

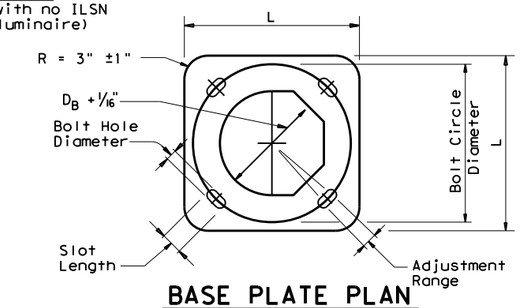

BASE PLATE PLAN

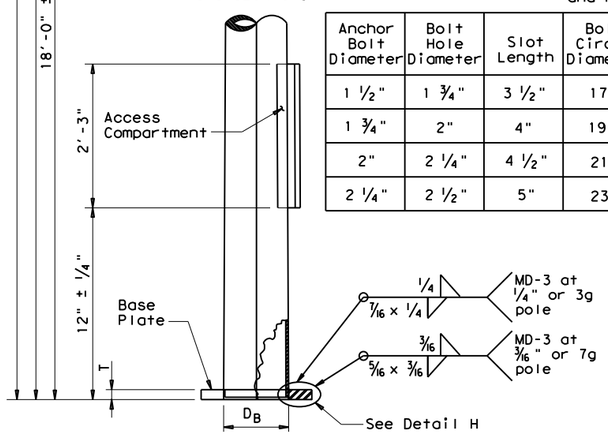

POLE ELEVATION

Anchor Bolt Diameter	Bolt Hole Diameter	Slot Length	Bolt Circle Diameter	Base ℞ Dim. L x T	Adjust. Range
1 ½"	1 ¾"	3 ½"	17"	18" x 1 ½"	13.4°
1 ¾"	2"	4"	19"	20" x 1 ¾"	13.5°
2"	2 ¼"	4 ½"	21"	22" x 2"	13.6°
2 ¼"	2 ½"	5"	23"	24" x 2 ¼"	13.7°

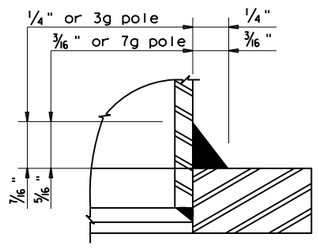

DETAIL H

① 85% Min. penetration

② 60% Min. penetration 100% pemetration within 6" of circumferential base welds.

SECTION V-V

MD-2 pole thickness
MD-1 ②
2" dia threaded coupling - 2 per dual mast arm assembly

NOTES:

1. The cover shall be one piece formed from ABS plastic, shall be a pearl gray color, and shall be suitable for exposure to harsh sunlight and extreme weather. Cover shall latch with two screw latches and shall fit tightly to the enclosure ring to create a rainproof seal. Latch screws shall be 1/4-20 stainless flat socket head screws with tamper proof feature.
2. The pole manufacturer shall provide with each pole a separate kit consisting of: one cover with two latching assemblies, two terminal strips (Marathon #985GP12CU or approved equal), four #8-32 x 1 ¼" self tapping type "F" stainless steel pan head screws, and one ground connector (Blackburn TTC, Burndy KC22J12T13, or Ilsco SSS-5). The traffic signal contractor shall install the kit items in the field.
3. The screw hole spacing on the enclosure back plate shall be for two Marathon #985GP12 terminal strips, one Marathon #985GP06CU terminal strip, and one Bussmann #BM6032B fuse block.
4. Install one Bussmann #BM6032B, Littelfuse #L60030M-2C, or Ferraz-Shawmut #30352 fuse block for poles where luminaires are to be installed.

Texas Department of Transportation
Traffic Operations Division

TRAFFIC SIGNAL SUPPORT STRUCTURES MAST ARM POLE DETAILS

MA-D-12

© TxDOT August 1995

REVISIONS
8-99
1-12

DN: MS	CK: JSY	DW: FDN	CK: CAL
CONT	SECT	JOB	HIGHWAY
DIST	COUNTY		SHEET NO.
	WILLIAMSON		47

127

DISCLAIMER: The use of this standard is governed by the "Texas Engineering Practice Act". No warranty of any kind is made by TxDOT for any purpose whatsoever. TxDOT assumes no responsibility for the conversion of this Standard to other formats or for incorrect results or damages resulting from its use.

DATE: 1/15/2025
FILE: pw:\\jmt-pw.bentley.com:jmt-pw-01\Documents\Projects\2022\22-01219-001\Design\4 - Design\Plan Set\8. Traffic\Signal Standards\ts-fd.dgn

FOUNDATION DESIGN TABLE

FDN TYPE	DRILLED SHAFT DIA	REINFORCING STEEL		EMBEDDED DRILLED SHAFT LENGTH-ft ④, ⑤, ⑥			ANCHOR BOLT DESIGN ①				FOUNDATION DESIGN LOAD ②		TYPICAL APPLICATION
		VERT BARS	SPIRAL & PITCH	TEXAS CONE PENETROMETER N blows/ft			ANCHOR BOLT DIA	Fy (ksi)	BOLT CIR DIA	ANCHOR TYPE	MOMENT K-ft	SHEAR Kips	
				10	15	40							
24-A	24"	4- #5	#2 at 12"	5.7	5.3	4.5	¾"	36	12 ¾"	1	10	1	Pedestal pole, pedestal mounted controller.
30-A	30"	8- #9	#3 at 6"	11.3	10.3	8.0	1 ½"	55	17"	2	87	3	Mast arm assembly. (see Selection Table)
36-A	36"	10- #9	#3 at 6"	13.2	12.0	9.4	1 ¾"	55	19"	2	131	5	Mast arm assembly. (see Selection Table) 30' strain pole with or without luminaire.
36-B	36"	12- #9	#3 at 6"	15.2	13.6	10.4	2"	55	21"	2	190	7	Mast arm assembly. (see Selection Table) Strain pole taller than 30' & strain pole with mast arm
42-A	42"	14- #9	#3 at 6"	17.4	15.6	11.9	2 ¼"	55	23"	2	271	9	Mast arm assembly. (see Selection Table)

NOTES:

① Anchor bolt design develops the foundation capacity given under Foundation Design Loads.

② Foundation Design Loads are the allowable moments and shears at the base of the structure.

③ Foundations may be listed separately or grouped according to similarity of location and type. Quantities are for the Contractor's information only.

④ Field Penetrometer readings at a depth of approximately 3 to 5 feet may be used to adjust shaft lengths.

⑤ If rock is encountered, the Drilled Shaft shall extend a minimum of two diameters into solid rock.

⑥ Decimal lengths in Design Table are to allow interpolation for other penetrometer values. Round to nearest foot for entry into Summary Table.

FOUNDATION SUMMARY TABLE ③

LOCATION IDENTIFICATION	AVG. N BLOW /ft.	FDN TYPE	NO. EA	DRILLED SHAFT LENGTH ⑥ (FEET)				
				24-A	30-A	36-A	36-B	42-A
P1, P2, P3, P4		36-A	4			56		
TOTAL DRILLED SHAFT LENGTHS						56		

FOUNDATION SELECTION TABLE FOR STANDARD MAST ARM PLUS ILSN SUPPORT ASSEMBLIES (ft)

		FDN 30-A	FDN 36-A	FDN 36-B	FDN 42-A
80 MPH DESIGN WIND SPEED	MAX SINGLE ARM LENGTH	32'	48'		
	MAXIMUM DOUBLE ARM LENGTH COMBINATIONS	24' X 24'			
		28' X 28'			
		32' X 28'	32' X 32'		
			36' X 36'		
			40' X 36'		
			44' X 28'	44' X 36'	
100 MPH DESIGN WIND SPEED	MAX SINGLE ARM LENGTH		36'	44'	
	MAXIMUM DOUBLE ARM LENGTH COMBINATIONS		24' X 24'		
			28' X 28'		
			32' X 24'	32' X 32'	
				36' X 36'	
				40' x24'	40' X 36'
					44' x 36'

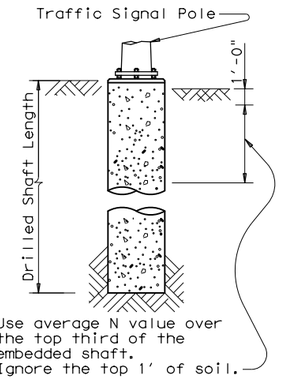

ANCHOR BOLT & TEMPLATE SIZES

BOLT DIA IN.	⑦ BOLT LENGTH	TOP THREAD	BOTTOM THREAD	BOLT CIRCLE	R2	R1
¾"	1'-6"	3"	—	12 ¾"	7 ⅛"	5 ⅝"
1 ½"	3'-4"	6"	4"	17"	10"	7"
1 ¾"	3'-10"	7"	4 ½"	19"	11 ¼"	7 ¾"
2"	4'-3"	8"	5"	21"	12 ½"	8 ½"
2 ¼"	4'-9"	9"	5 ½"	23"	13 ¾"	9 ¼"

⑦ Min dimensions given, longer bolts are acceptable.

GENERAL NOTES:

Design conforms to 1994 AASHTO Standard Specifications for Structural Supports for Highway Signs, Luminaires and Traffic Signals and interim revisions thereto.

Reinforcing steel shall conform to Item 440, "Reinforcing Steel".

Concrete shall be Class "C".

Threads for anchor bolts and nuts shall be rolled or cut threads of 8UN series up to 2" in diameter or UNC series for all sizes. Bolts and nuts shall have Class 2A and 2B fit tolerances. Galvanized nuts shall be tapped after galvanizing.

Anchor bolts that are larger than 1" in diameter shall conform to "alloy steel" or "medium-strength mild steel" per Item 449, "Anchor Bolts". Anchor bolts that are 1" in diameter or less shall conform to ASTM A36. Galvanize a minimum of the top end thread length plus 6" for all anchor bolts unless otherwise noted. Exposed washers and exposed nuts shall be galvanized. All galvanizing shall be in accordance with Item 445, "Galvanizing".

Templates and embedded nuts need not be galvanized. Lubricate and tighten anchor bolts when erecting the structure in accordance with Item 449, "Anchor Bolts".

EXAMPLE:
1. For 80mph design wind speed, foundation 30-A can support up to a 32' arm with another arm up to 28'
2. For 100mph design wind speed, foundation 36-A can support a single 36' mast arm.

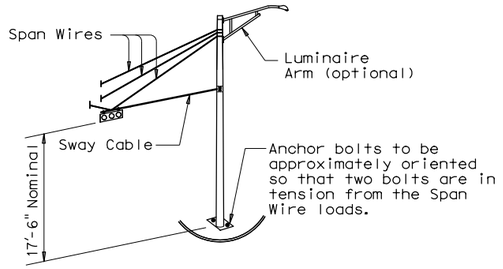

TYPICAL STRAIN POLE ASSEMBLY

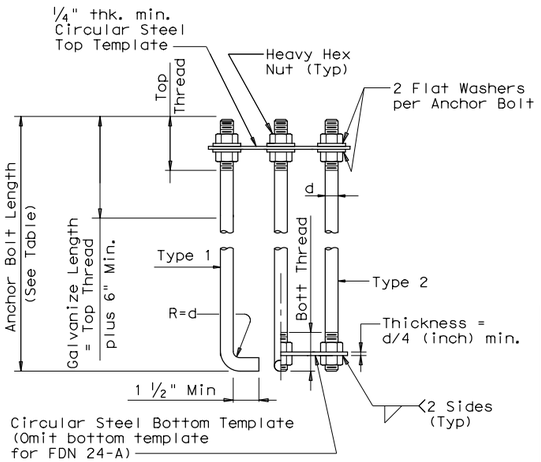

ANCHOR BOLT ASSEMBLY

⑧ Orient anchor bolts orthogonal with the fixed arm direction to ensure that two bolts are in tension under dead load.

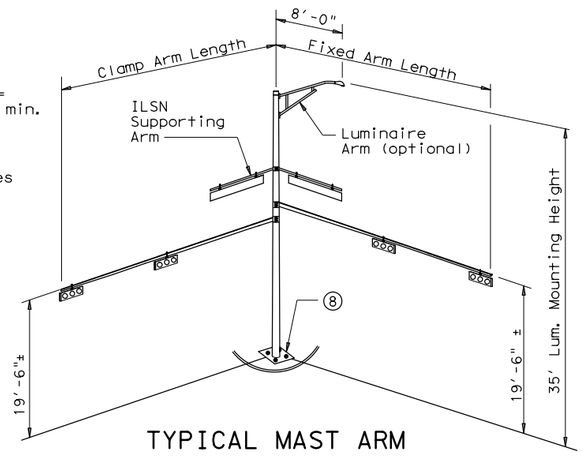

TYPICAL MAST ARM ASSEMBLY

TOP VIEW

ELEVATION

FOUNDATION DETAILS

1/15/2025

Texas Department of Transportation
Traffic Operations Division

TRAFFIC SIGNAL POLE FOUNDATION

TS-FD-12

©TxDOT August 1995

REVISIONS	DN: MS	CK: JSY	DW: MAO/MMF	CK: JSY/TEB
5-96 11-98 1-12	CONT	SECT	JOB	HIGHWAY
	DIST	COUNTY		SHEET NO.
		WILLIAMSON		48

128

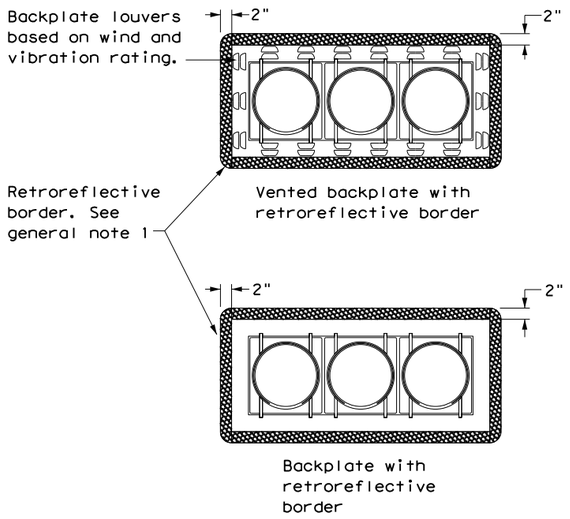

THREE-SECTION HEAD
HORIZONTAL OR VERTICAL

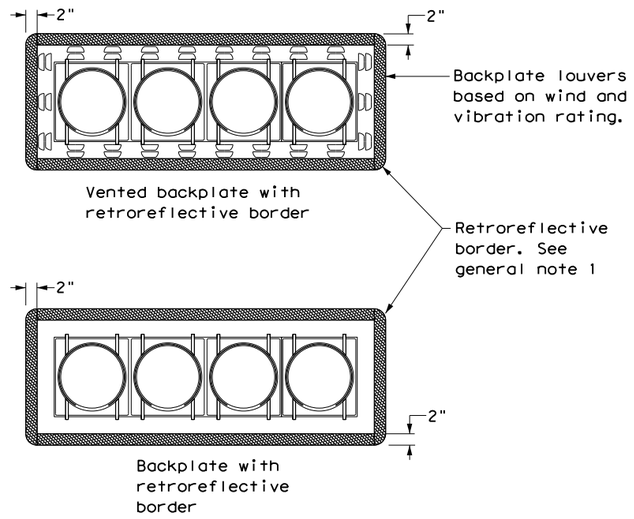

FOUR-SECTION HEAD
HORIZONTAL OR VERTICAL

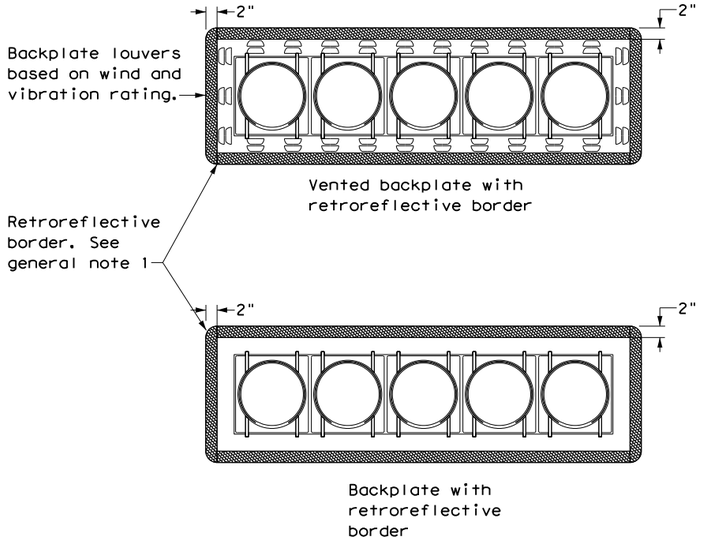

FIVE-SECTION HEAD
HORIZONTAL OR VERTICAL

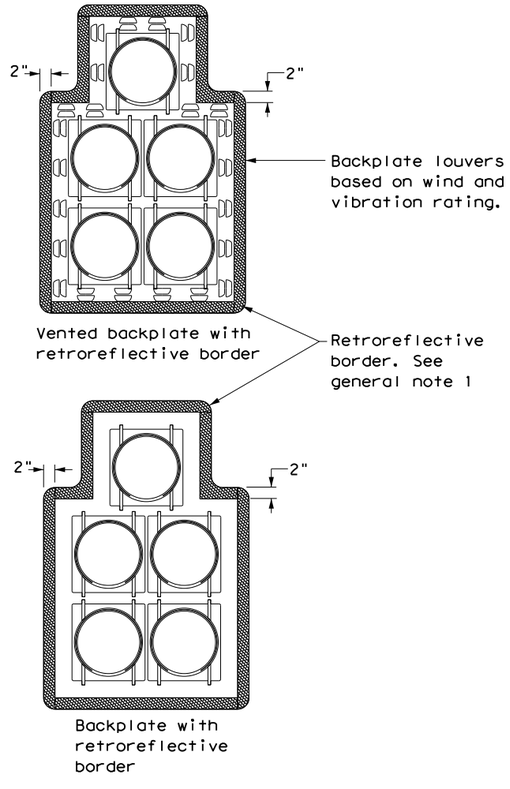

FIVE-SECTION HEAD
CLUSTER

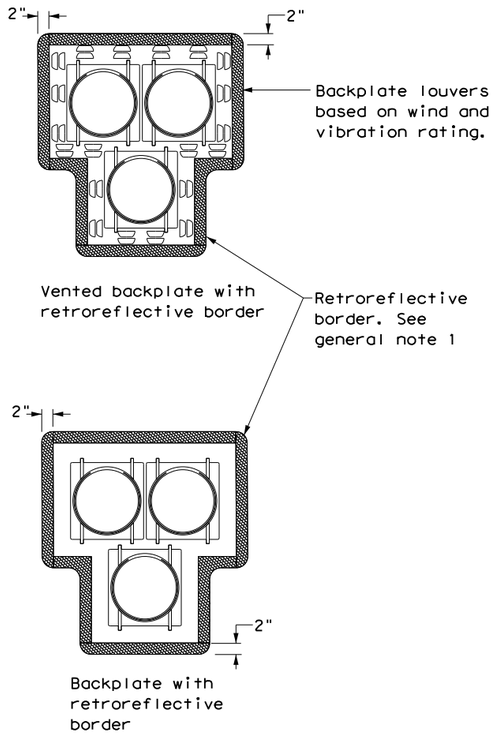

PEDESTRIAN HYBRID
BEACON

GENERAL NOTES:

1. Backplates are optional for traffic signals and pedestrian hybrid beacons. When backplates are used, a 2-inch wide fluorescent yellow AASHTO Type B_{FL} or C_{FL} retroreflective border conforming to TxDOT DMS-8300 is required. Place on all approaches when used.
2. Signal head and backplate compatability must be verified by the contractor prior to installation.
3. When using backplates on signal heads, venting is preferred to reduce cyclic vibration stress.
4. When a vented backplate is used, the retroreflective border must not be placed over the louvers.
5. This standard sheet applies to all signal heads with backplates, including but not limited to:
   - Pole mounted
   - Overhead mounted
   - Span wire mounted
   - Mast arm mounted
   - Vertical signal heads
   - Horizontal signal heads
   - Clustered signal heads
   - Pedestrian hybrid beacons

Texas Department of Transportation | Traffic Safety Division Standard

TRAFFIC SIGNAL HEAD WITH BACKPLATE
TS-BP-20

FILE: ts-bp-20.dgn	DN: TxDOT	CK: TxDOT	DW: TxDOT	CK: TxDOT
© TxDOT June 2020	CONT	SECT	JOB	HIGHWAY
REVISIONS				
	DIST	COUNTY		SHEET NO.
		WILLIAMSON		49

134

DISCLAIMER:
The use of this standard is governed by the "Texas Engineering Practice Act". No warranty of any kind is made by TxDOT for any purpose whatsoever. TxDOT assumes no responsibility for the conversion of this standard to other formats or for incorrect results or damages resulting from its use.

DATE: 1/15/2025 $TIME$
FILE: pw:\\jmt-pw.bentley.com:jmt-pw-01\Documents\Projects\2022\22-01219-001\Design\Traffic Safety Division Standards\TS-BP-20.dgn

DISCLAIMER:
The use of this standard is governed by the "Texas Engineering Practice Act". No warranty of any kind is made by TxDOT for any purpose whatsoever. TxDOT assumes no responsibility for the conversion of this standard to other formats or for incorrect results or damages resulting from its use.

DATE: 1/15/2025 $TIME$
FILE: pw:\\jmt-pw.bentley.com:jmt-pw-01\Documents\Projects\2022\22-01219-001\Design\Design Standards\ts-cf-21.dgn

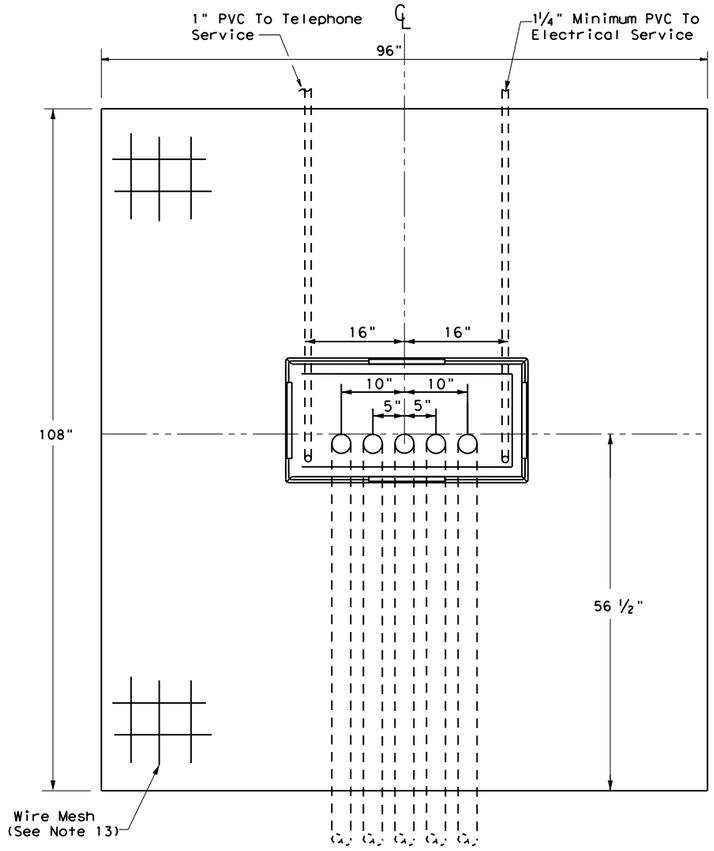

TOP VIEW

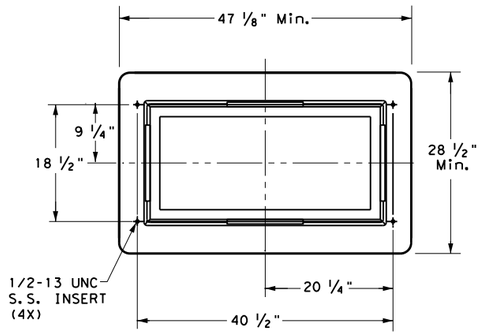

CABINET BASE

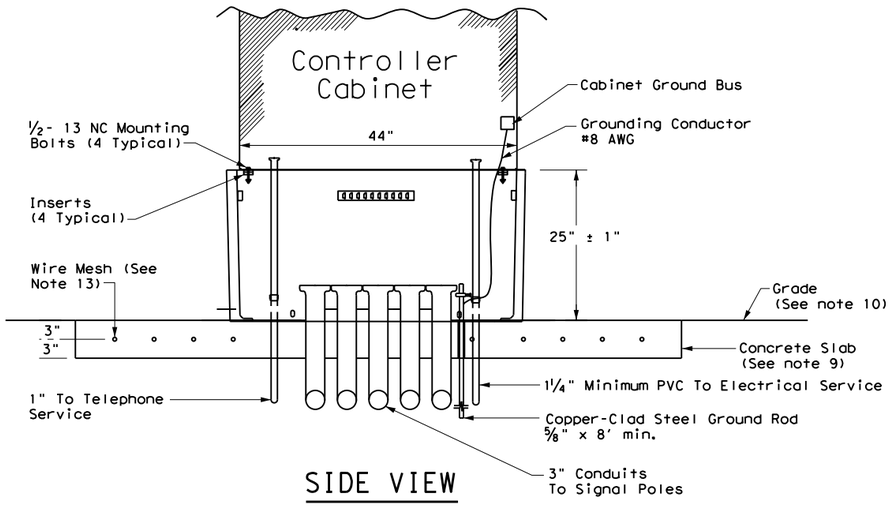

SIDE VIEW

TRAFFIC SIGNAL CONTROLLER BASE:

1. Provide a traffic signal controller base (cabinet base) manufactured of polymer concrete material consisting of calcareous and siliceous stone; glass fibers and thermoset polyester resin. The polymer concrete cabinet base must be reinforced on the inside of the cabinet base with fiberglass matting. Provide one of the following bases: Armorcast Part # A6001848X24, Quazite Model # PG3048Z709, or other as approved by TxDOT Traffic Safety Division.
2. The polymer concrete material must have a minimum compressive strength of 10,300 pounds per square inch (psi), minimum flexural strength of 3600 psi, and minimum shear strength of 3600 psi.
3. The polymer concrete cabinet base must conform to the dimensions shown and must accommodate a standard TxDOT basemount cabinet.
4. Supply the cabinet base with four 1#2"-13 UNC stainless steel inserts for attachment of the cabinet to the base. Inserts must withstand a minimum torque of 50 ft-lb and a minimum straight pull out strength of 750 lbs.
5. Provide the cabinet base with 4 cable racks mounted one on each side of the base 2" to 7 " from the top edge of the base. Unless approved otherwise, cable racks must be 1-1/2 x 9#16x 3#16inch steel channel with eight T-slots spaced at 1-1/2 inches. The cable racks must easily accommodate the insertion of tie wraps to attach field wiring to the racks to serve as strain relief. Secure cable racks to the base using 1#2"-13 UNC stainless steel screws and inserts.
6. The cabinet base, when secured to the concrete slab with controller cabinet attached, must withstand a minimum wind load of 125 mph or a 850 lb force applied at 49" above the bottom of the base without causing the base or cabinet to come out of their anchored position or cause any permanent deformation. The manufacturer must supply certification by an independent testing laboratory or sealed by a Texas Licensed Professional Engineer. Provide the cabinet base with hardware for attachment to a concrete slab.
7. The traffic signal base must be permanently marked either by impress or by permanent ink with the manufacturer's model number and name or logo.
8. Seal the base to the concrete with a silicone caulk bead and fastened to the slab per manufacturer's instructions.

CONCRETE SLAB:

9. Traffic signal controller pad must be a portland cement concrete slab poured in place, must conform to the dimensions shown, and must be level.
10. Grade earthwork such that it is flush with the concrete pad on all four sides, unless otherwise shown on the plans. Subsidiary to ITEM 680, four inch rip rap may be used in lieu of earthwork. Slopes shall gradually contour to match plans.
11. Bond a #8 AWG copper ground wire and an 8 ft ground rod bonded to the reinforcing mesh by a suitable UL Listed clamp and terminated to the cabinet grounding bus for the purpose of providing a local ground for the electrical grounding conductor. The electrical grounding conductor specified in Item 680-3.A.4 is required and must be terminated to the cabinet ground bus.
12. Install a PVC sleeve to prevent the ground rod from direct embedment in the slab.
13. Provide welded wire mesh 6X6-W2.9 X W2.9 for reinforcement. Provide joints and splices in the mesh with a minimum 6-inch overlap. Center the mesh between top and bottom and provide a minimum 3 inch cover on the edges.
14. Provide Class B concrete minimum for the slab in accordance with Item 421. Construct the slab in accordance with Item 531.

CONDUITS:

15. Stub up and run 3-inch conduits through the slab to the various traffic signal poles and ground boxes as shown on the layouts. Install the number of conduits as shown on layouts plus two additional 3 inch conduits for future use. Terminate the conduits with a bushing between 2 and 4-inches above the slab.
16. Extend conduits for future use at least 18-inches from the edge of the slab, terminate underground with a coupling, and cap and seal so that the seal can be removed without damaging the coupling. This must also apply to unused telephone conduit.
17. Stub up two separate conduits through the slab from the electrical and telephone services. Run the conduit for the electrical feed directly to the electrical service enclosure. Run the conduit for the telephone line directly to the telephone service, usually located on the same pole as the electrical service. Telephone must not under any circumstance share a conduit with any other function.
18. Terminate electric and telephone conduits above the slab with a coupling. After the base is installed, extend the conduits above the top of the base and secure to the base using a steel one-hole strap or similar suitable substitute.

CONTROLLER CABINET:

19. Anchor the controller cabinet to the base using four stainless steel 1/2-13 NC bolts.
20. The silicone caulk bead specified in Item 680.3.B must be RTV 133.

PAYMENT:

21. Bid TS-CF as subsidiary to Item 680.

Texas Department of Transportation

Traffic Safety Division Standard

TRAFFIC SIGNAL CONTROLLER CABINET BASE AND PAD
TS-CF-21

FILE: ts-cf-21.dgn	DN:	CK:	DW:	CK:
©TxDOT October 2000	CONT	SECT	JOB	HIGHWAY
REVISIONS 12-04 2-21	DIST	COUNTY		SHEET NO.
		WILLIAMSON		50

132

RADAR DETECTION ZONE LOCATIONS

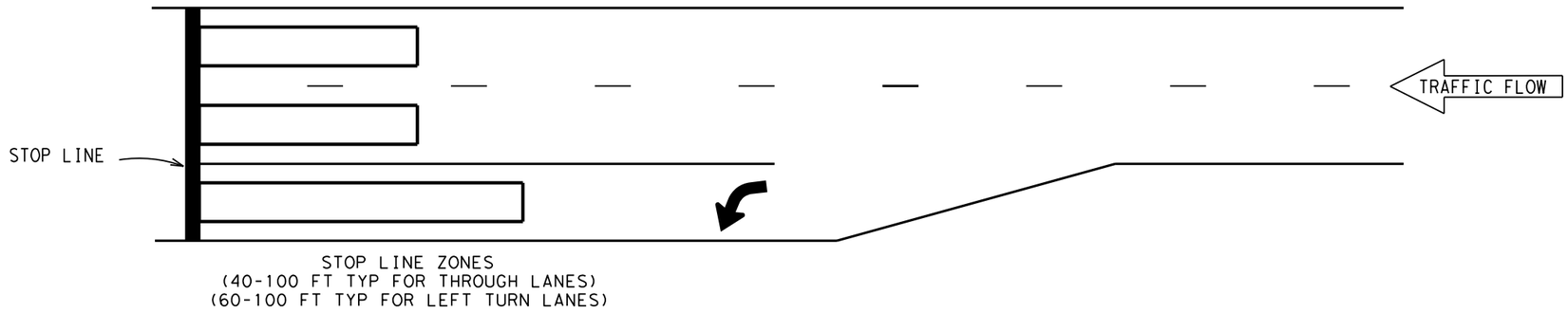

APPROACH SPEED LIMIT (MPH)	MINIMUM RANGE OF ADVANCE DETECTION (LF)
40	355
45	400
50	440
55	490
60	530
65	575
70	620

RADAR DETECTION INSTALLATION DETAILS

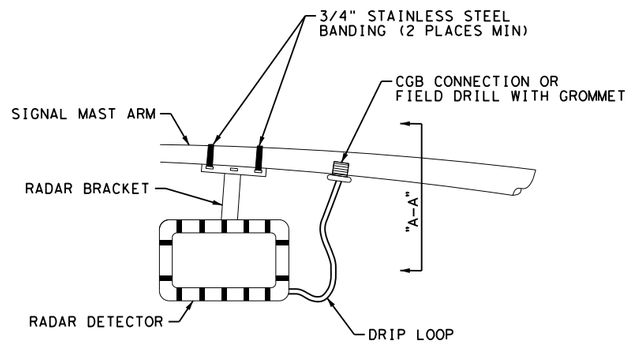

MAST ARM MOUNT

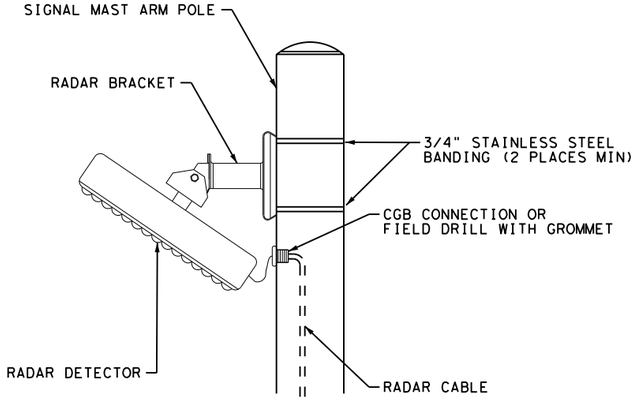

POLE MOUNT

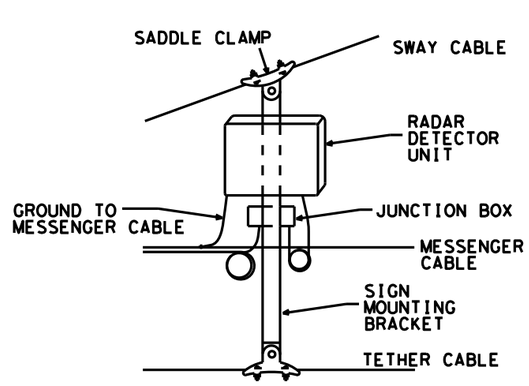

SPAN WIRE MOUNT FOR ADVANCE RADAR

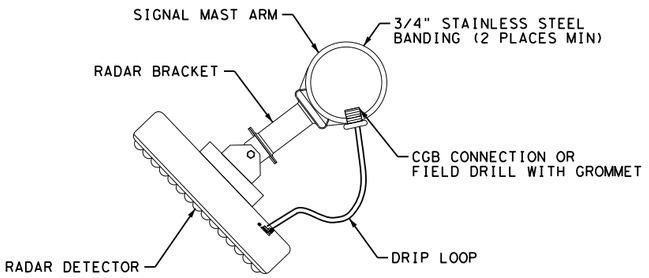

SECTION "A-A"

NOTES:

1. THE RADAR SENSOR MOUNTING BRACKET MUST BE ADJUSTABLE TO TILT UP, DOWN, LEFT, RIGHT, AND TO ROTATE.

2. THE RADAR DETECTOR UNITS SHOWN ARE NOT INTENDED TO REPRESENT ANY SPECIFIC BRAND OR PRODUCT, AND ALTERNATE MOUNTING METHODS MAY BE SUBMITTED FOR APPROVAL.

DALLAS DISTRICT STANDARD

Texas Department of Transportation
©2023
Dallas District

RADAR VEHICLE DETECTION SYSTEM
RVDS-23 (DAL)

©TxDOT May 2018	DN: EF	CK: ---	DW: EF	CK: TRF-Aus.
REVISIONS	FED.RD. DIV.NO.	FEDERAL AID PROJECT NO.		HIGHWAY NO.
	6	(SEE TITLE SHEET)		
	STATE	DISTRICT	COUNTY	SHEET NO.
	TEXAS	18	DALLAS	50A
	CONTROL	SECTION	JOB	
	----	--	---	

SUMMARY OF PAVEMENT CONTROL ITEMS				
ID	ITEM CODE	DESCRIPTION	UNIT	QUANTITY
A	636 6001	ALUMINUM SIGNS (TY A)	SF	117
	644 6061	IN SM RD SN SUP&AM TYTWT(1)WS(T)	EA	4
B	644 6076	REMOVE SM RD SN SUP&AM	EA	2
C	666 6036	REFL PAV MARK TY I (W) 8" (SLD) (100MIL)	LF	66
D	666 6048	REFL PAV MARK TY I (W) 24" (SLD) (100MIL)	LF	100
E	666 6054	REFL PAV MARK TY I (W) (ARROW) (100MIL)	EA	1
F	666 6078	REFL PAV MARK TY I (W) (WORD) (100MIL)	EA	1
G	666 6321	RE PM W/RET REQ TY I (Y) 6" (SLD) (100MIL)	LF	118
H	672 6007	REFL PAV MRKR TY I-C	EA	4
I	672 6009	REFL PAV MRKR TY II-A-A	EA	14
J	677 6002	ELIM EXT PAV MRK & MRKS (6")	LF	624
K	677 6003	ELIM EXT PAV MRK & MRKS (8")	LF	71
L	677 6005	ELIM EXT PAV MRK & MRKS (12")	LF	24
M	677 6007	ELIM EXT PAV MRK & MRKS (24")	LF	136

PROPOSED SMALL SIGN ASSEMBLY				
ID	SIGN ID*	CHAIN	STATION	OFFSET DIRECTION
A	1	LIMMER	11+36.71	RIGHT
A	2	LIMMER	17+68.02	LEFT
A	3	INNOVATION-N	8+17.00	LEFT
A	4	INNOVATION-S	4+86.21	RIGHT

* SEE SUMMARY OF SMALL SIGNS FOR SIGN ID

HORZ 0' 20' 40'
SCALE IN FEET

LEGEND

POINT #
BID ITEM ID
–

NOTES:

1. CONTRACTOR SHALL FOLLOW TXDOT STANDARDS AND TMUTCD FOR ALL SIGNING AND PAVEMENT MARKINGS.

STRIPING CALLOUTS			
ID	CHAIN	STATION	OFFSET
C-1	LIMMER	13+86.71	6.68' RT
C-2	LIMMER	13+20.66	5.47' RT
D-1	INNOVATION-N	5+66.00	24.02' LT
D-2	INNOVATION-N	5+66.00	0.67' LT
D-3	LIMMER	15+17.02	18.96' LT
D-4	LIMMER	15+07.02	6.37' RT
D-5	INNOVATION-S	7+37.21	23.92' RT
D-6	INNOVATION-S	7+37.21	0.19' RT
D-7	LIMMER	13+87.71	18.70' RT
D-8	LIMMER	13+87.71	6.67' LT
G-1	LIMMER	13+87.70	6.95' LT
G-2	LIMMER	13+20.67	5.53' LT
G-3	LIMMER	12+70.66	4.55' RT
J-1	LIMMER	13+20.67	5.53' LT
J-2	LIMMER	14+02.63	7.71' LT
J-3	LIMMER	14+03.92	7.43' RT
J-4	LIMMER	12+70.66	4.55' RT
J-5	INNOVATION-N	5+47.28	25.44' LT
J-6	INNOVATION-N	5+66.00	24.02' LT
J-7	INNOVATION-N	5+46.77	0.59' LT
J-8	INNOVATION-N	5+66.00	0.67' LT
J-9	INNOVATION-S	7+37.21	0.19' RT
J-10	INNOVATION-S	7+59.60	0.16' RT
J-11	LIMMER	14+88.76	18.95' LT
J-12	LIMMER	15+17.02	18.96' LT
J-13	LIMMER	14+88.15	6.36' RT
J-14	LIMMER	15+17.02	6.37' RT

STRIPING CALLOUTS			
ID	CHAIN	STATION	OFFSET
K-1	INNOVATION-N	5+46.92	11.90' LT
K-2	INNOVATION-N	5+65.00	11.90' LT
K-3	INNOVATION-S	7+38.21	11.65' RT
K-4	INNOVATION-S	7+60.38	11.63' RT
K-5	LIMMER	14+86.49	7.11' LT
K-6	LIMMER	15+16.02	7.12' LT
L-1	LIMMER	14+02.63	7.71' LT
L-2	LIMMER	14+03.92	7.43' RT
M-1	INNOVATION-N	5+46.34	25.67' LT
M-2	INNOVATION-N	5+45.86	0.70' LT
M-3	INNOVATION-S	7+60.68	0.24' RT
M-4	INNOVATION-S	7+60.48	19.95' RT

STATE OF TEXAS
ELLIOT R. CUDE
131513
LICENSED PROFESSIONAL ENGINEER
1/15/2025

CITY OF HUTTO

JMT
TBPE FIRM REG. NO. F-16341

CITY OF HUTTO
TRAFFIC SIGNAL PROJECT
LIMMER LOOP AND INNOVATION BLVD

LIMMER LOOP AND INNOVATION BLVD PAVEMENT MARKING DESIGN

SCALE 1" = 40'

SHEET 1 OF 1

(C) 2024	STATE	CITY	COUNTY	SHEET NO.
	TEXAS	HUTTO	WILLIAMSON	51

FILENAME: pw:\\jmt-pw.bentley.com:jmt-pw-01\Documents\Projects\2022\22-01219-001\Design\4 - Design\Plan Set\8. Traffic\HUTTO*PAVMT.dgn

DRAWING DATE: 1/15/2025

DISCLAIMER:
The use of this standard is governed by the "Texas Engineering Practice Act". No warranty of any kind is made by TxDOT for any purpose whatsoever. TxDOT assumes no responsibility for the conversion of this standard to other formats or for incorrect results or damages resulting from its use.

DATE: DATE/TIME
FILE: DOCUMENT NAME

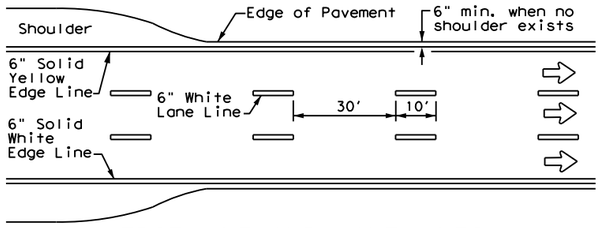

EDGE LINE AND LANE LINES ONE-WAY ROADWAY WITH OR WITHOUT SHOULDERS

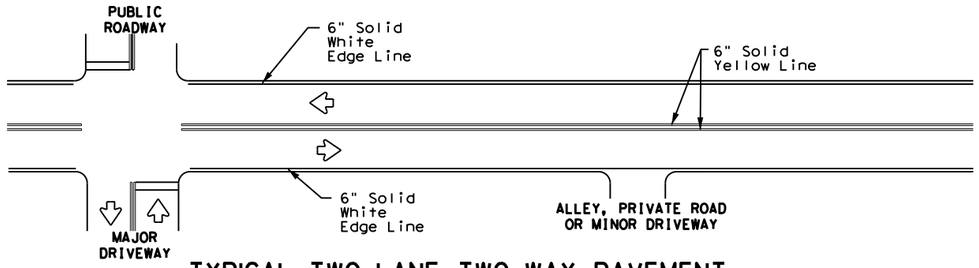

TYPICAL TWO-LANE, TWO-WAY PAVEMENT MARKINGS THROUGH INTERSECTIONS

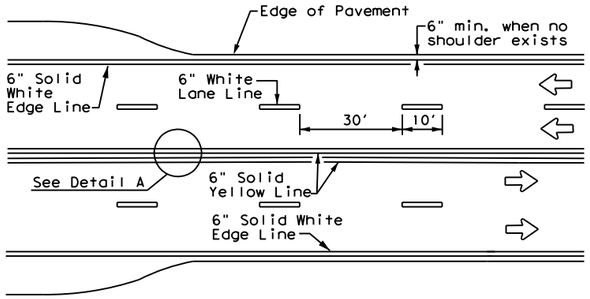

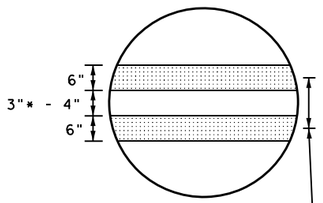

DETAIL "A"

9"** min. - 10" typ.
(18" max. for traveled way greater than 48' only)

* 2" minimum for restripe projects when approved by the Engineer.

** 8" minimum for restripe projects when approved by the Engineer.

CENTERLINE AND LANE LINES FOUR LANE TWO-WAY ROADWAY WITH OR WITHOUT SHOULDERS

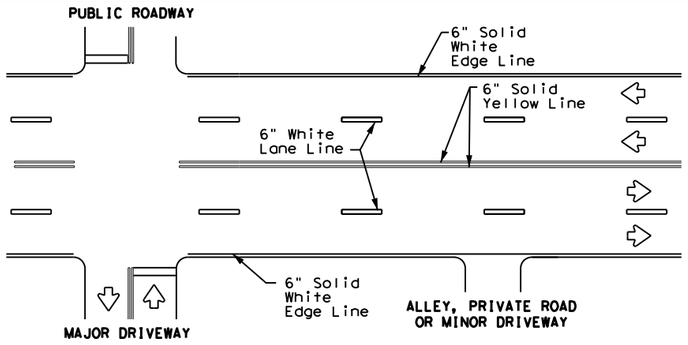

TYPICAL MULTI-LANE, TWO-WAY PAVEMENT MARKINGS THROUGH INTERSECTIONS

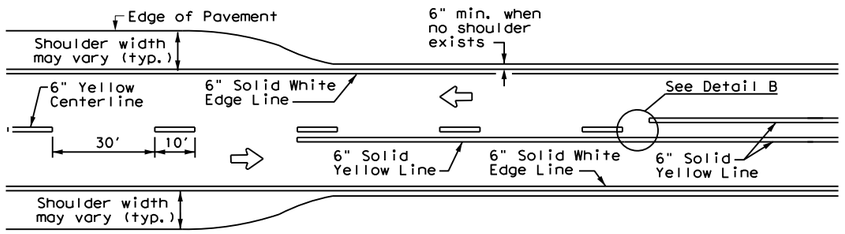

TWO LANE TWO-WAY ROADWAY WITH OR WITHOUT SHOULDERS

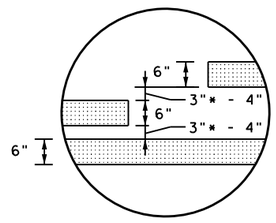

18" min. - 20" max.
(16" minimum for restripe projects when approved by the Engineer.)

DETAIL "B"

* 2" minimum for restripe projects when approved by the Engineer.

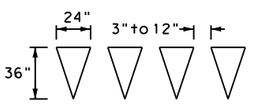

For posted speed on road being marked equal to or greater than 45 MPH.

YIELD LINES



For posted speed on road being marked equal to or less than 40 MPH.

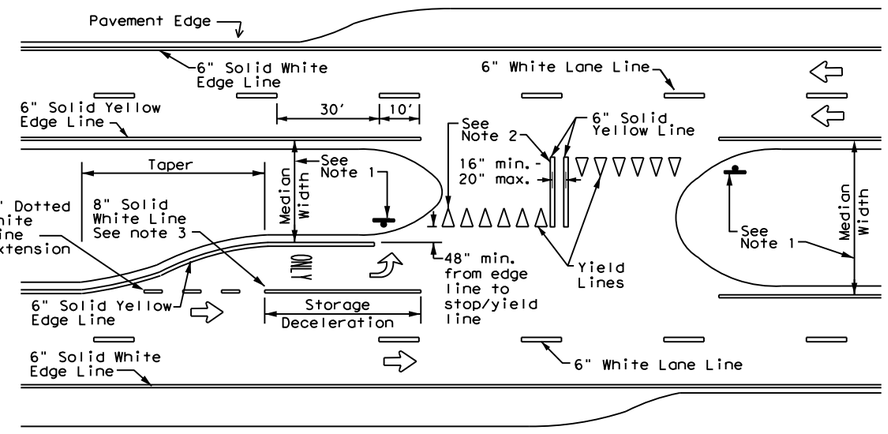

FOUR LANE DIVIDED ROADWAY CROSSOVERS

NOTES

1. Where divided highways are separated by median widths at the median opening itself of 30 feet or more, median openings shall be signed as two separate intersections. Each median opening has two width measurements, with one measurement for each approach. The narrow median width will be the controlling width to determine if signs are required. Yield signs are the typical intersection control. Stop signs and stop bars are optional as determined by the Engineer.
2. Install median striping (double yellow centerlines and stop lines/yield lines) when a 50' or greater median centerline can be placed. Stop lines shall only be used with stop signs. Yield lines shall only be used with yield signs.
3. Length of turn bays, including taper, deceleration, and storage lengths shall be as shown on the plans or as directed by the Engineer.

GENERAL NOTES

1. Edge line striping shall be as shown in the plans or as directed by the Engineer. The edge line should not be placed less than 6 inches from the edge of pavement. This distance may vary due to pavement raveling or other conditions. Edge lines are not required in curb and gutter sections of roadways.
2. The traveled way includes only that portion of the roadway used for vehicular travel. It does not include the parking lanes, sidewalks, berms and shoulders. The traveled ways shall be measured from the center of edge line to the center of edge line of a two lane roadway.

MATERIAL SPECIFICATIONS	
PAVEMENT MARKERS (REFLECTORIZED)	DMS-4200
EPOXY AND ADHESIVES	DMS-6100
BITUMINOUS ADHESIVE FOR PAVEMENT MARKERS	DMS-6130
TRAFFIC PAINT	DMS-8200
HOT APPLIED THERMOPLASTIC	DMS-8220
PERMANENT PREFABRICATED PAVEMENT MARKINGS	DMS-8240

All pavement marking materials shall meet the required Departmental Material Specifications as specified by the plans.

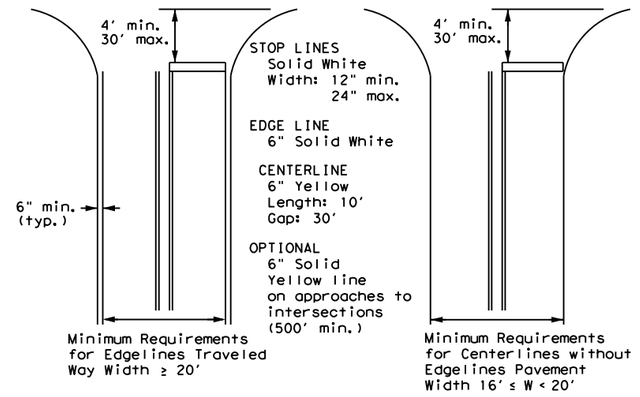

NOTE: Traveled way is exclusive of shoulder widths. Refer to General Note 2 for additional details.

GUIDE FOR PLACEMENT OF STOP LINES, EDGE LINE & CENTERLINE

Based on Traveled Way and Pavement Widths for Undivided Roadways

Texas Department of Transportation

Traffic Safety Division Standard

TYPICAL STANDARD PAVEMENT MARKINGS

PM(1)-22

FILE: pm1-22.dgn	DN:	CK:	DW:	CK:
©TxDOT December 2022	CONT	SECT	JOB	HIGHWAY
REVISIONS 11-78 8-00 6-20 8-95 3-03 12-22 5-00 2-12	DIST	COUNTY		SHEET NO.
		WILLIAMSON		52

22A

REFLECTIVE RAISED PAVEMENT MARKERS FOR VEHICLE POSITIONING GUIDANCE

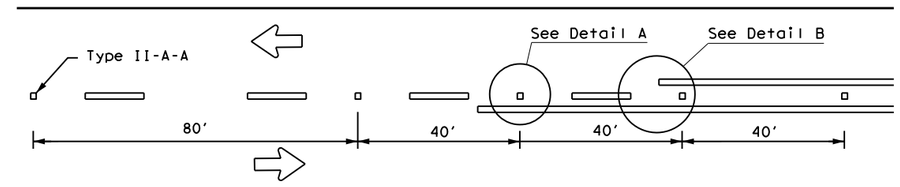

CENTERLINE FOR ALL TWO LANE TWO-WAY ROADWAYS

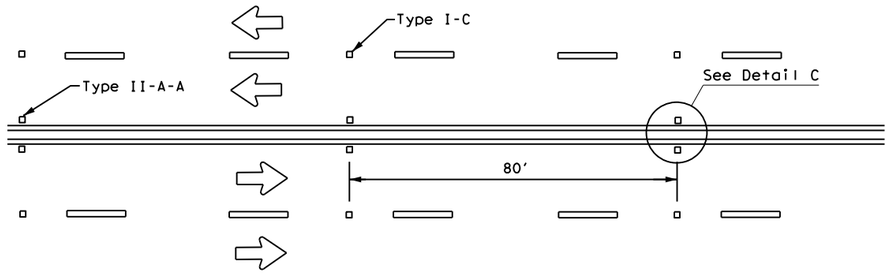

CENTERLINE & LANE LINES FOR FOUR LANE TWO-WAY ROADWAYS

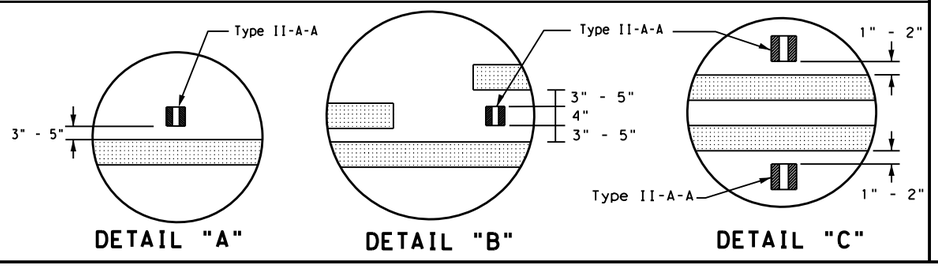

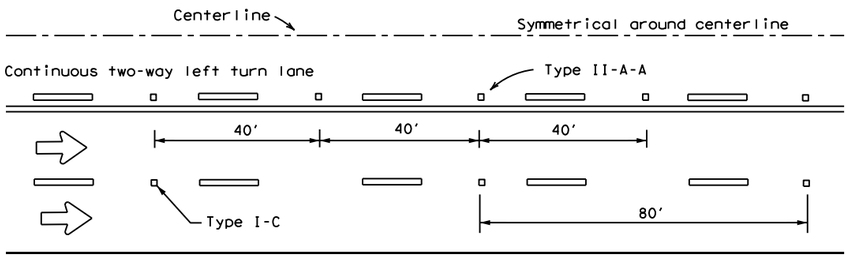

CENTERLINE AND LANE LINES FOR TWO-WAY LEFT TURN LANE

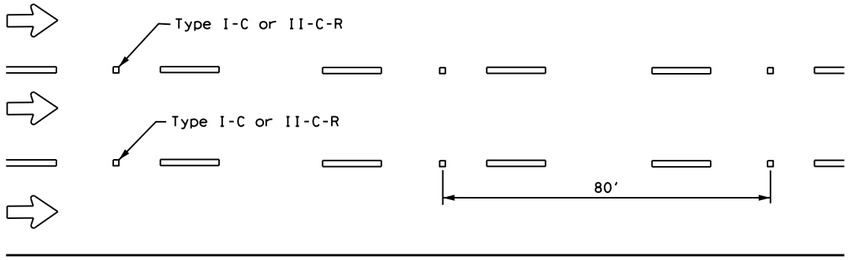

LANE LINES FOR ONE-WAY ROADWAY (NON-FREEWAY FACILITIES)

Raised pavement markers Type II-C-R shall have clear face toward normal traffic and red face toward wrong-way traffic.

See Note 3.

MATERIAL SPECIFICATIONS	
PAVEMENT MARKERS (REFLECTORIZED)	DMS-4200
EPOXY AND ADHESIVES	DMS-6100
BITUMINOUS ADHESIVE FOR PAVEMENT MARKERS	DMS-6130
TRAFFIC PAINT	DMS-8200
HOT APPLIED THERMOPLASTIC	DMS-8220
PERMANENT PREFABRICATED PAVEMENT MARKINGS	DMS-8240

All pavement marking materials shall meet the required Departmental Material Specifications as specified by the plans.

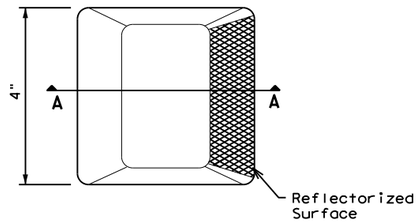

Type I (Top View)

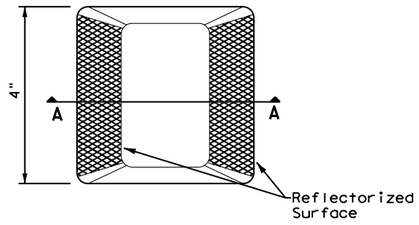

Type II (Top View)

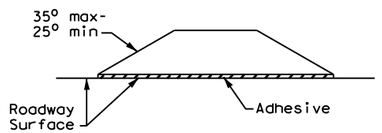

SECTION A

RAISED PAVEMENT MARKERS

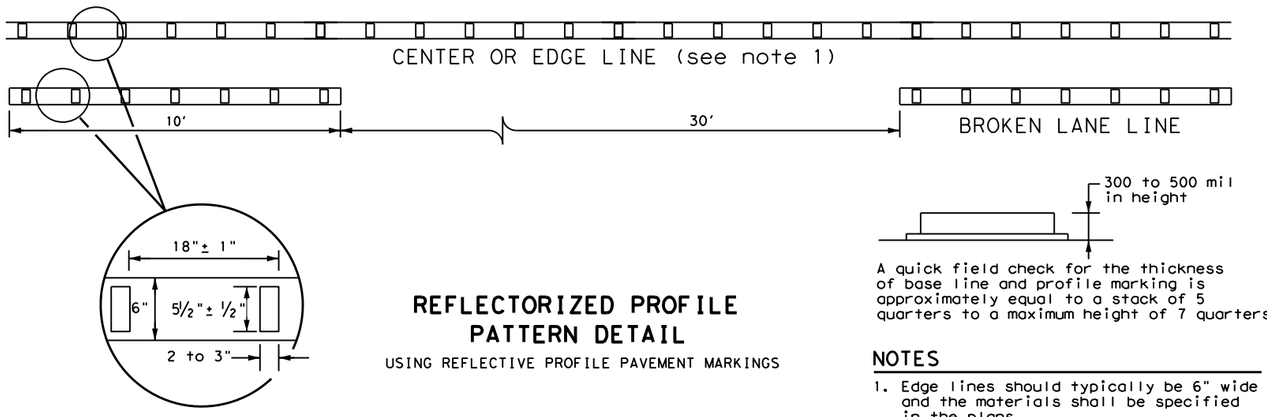

6" EDGE LINE, 6" CENTERLINE OR 6" LANE LINE

REFLECTORIZED PROFILE PATTERN DETAIL

USING REFLECTIVE PROFILE PAVEMENT MARKINGS

A quick field check for the thickness of base line and profile marking is approximately equal to a stack of 5 quarters to a maximum height of 7 quarters.

NOTES

1. Edge lines should typically be 6" wide and the materials shall be specified in the plans.
2. Profile markings shall not be placed on roadways with a posted speed limit of 45 MPH or less.

GENERAL NOTES

1. All raised pavement markers placed along broken lines shall be placed in line with and midway between the stripes.
2. On concrete pavements, the raised pavement markers should be placed to one side of the longitudinal joints.
3. Use raised pavement marker Type I-C with undivided roadways, flush medians, and two way left turn lanes. Use raised pavement marker Type II-C-R with divided highways and raised medians.

Texas Department of Transportation

Traffic Safety Division Standard

POSITION GUIDANCE USING RAISED MARKERS REFLECTORIZED PROFILE MARKINGS PM(2)-22

FILE: pm2-22.dgn	DN:	CK:	DW:	CK:
©TxDOT December 2022	CONT	SECT	JOB	HIGHWAY
REVISIONS 4-77 8-00 6-20 4-92 2-10 12-22 5-00 2-12	DIST	COUNTY		SHEET NO.
		WILLIAMSON		53

22B

DISCLAIMER:
The use of this standard is governed by the "Texas Engineering Practice Act". No warranty of any kind is made by TxDOT for any purpose whatsoever. TxDOT assumes no responsibility for the conversion of this standard to other formats or for incorrect results or damages resulting from its use.
DATE: DATE/TIME
FILE: DOCUMENT-NAME

DISCLAIMER:
The use of this standard is governed by the "Texas Engineering Practice Act". No warranty of any kind is made by TxDOT for any purpose whatsoever. TxDOT assumes no responsibility for the conversion of this standard to other formats or for incorrect results or damages resulting from its use.

DATE: DATE/2005 $TIME$
FILE: DOCUMENT-NAME Bentley.com:jmt-pw-01\Documents\Projects\2022\22-01219-00\Roadway\Dms\22-00gn\Design\pm3-22-00gn.dgn

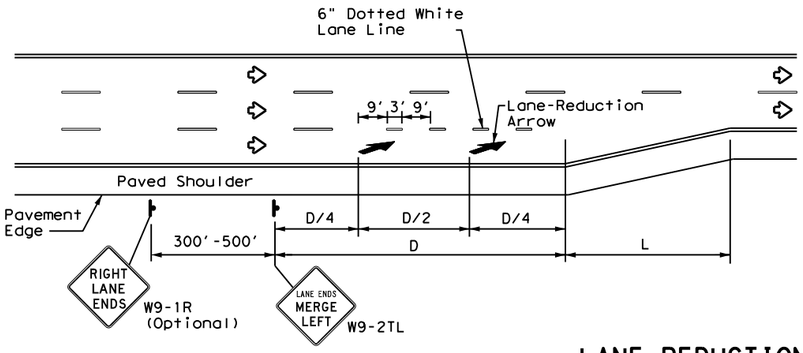

LANE REDUCTION

NOTES

1. Lane reduction pavement markings are used where the number of through lanes is reduced because of narrowing of the roadway or because of a section of on-street parking in what would otherwise be a through lane. For Texas Super 2 Passing Lanes, see TS2(PL) standard sheets.
2. On divided highways, an additional RIGHT LANE ENDS (W9-1R) sign may be installed in the median aligned with the W9-1R sign on the right side of the highway.
3. Lane reduction arrows are required for speeds of 45 mph or greater. An optional third lane reduction arrow may be added based on engineering judgement. If used, the optional third lane reduction arrow should be centered between the first and last lane reduction arrows.
4. For lane reductions on Freeways and Expressways, signing shall conform to the TxDOT Freeway Signing Handbook.

ADVANCED WARNING SIGN DISTANCE (D)		
Posted Speed	D (ft)	L (ft)
30 MPH	460	$L=\frac{WS^2}{60}$
35 MPH	565	
40 MPH	670	
45 MPH	775	L=WS
50 MPH	885	
55 MPH	990	
60 MPH	1,100	
65 MPH	1,200	
70 MPH	1,250	
75 MPH	1,350	

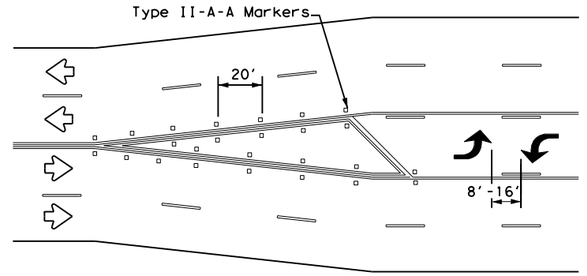

A two-way left-turn (TWLT) lane-use arrow pavement marking should be used at or just downstream from the beginning of a two-way left-turn lane within a corridor. Repeating the marking after each intersection or dedicated turn bay is not required unless stated elsewhere in the plans.

TYPICAL TRANSITION FOR TWLTL AND DIVIDED HIGHWAY

GENERAL NOTES

1. Lane use word and arrow markings shall be used where through lanes approaching an intersection become mandatory turn lanes. Lane use word and arrow markings should be used in auxiliary lanes of substantial length. Lane use arrow markings or word and arrow markings may be used in other lanes and turn bays for emphasis. Details for words and arrows are as shown in the Standard Highway Sign Designs for Texas.
2. When lane-use words and arrow markings are used, two sets of arrows should be used if the length of the bay is greater than 180 feet. When a single lane use arrow or word and arrow marking is used for a short turn lane, it should be located at or near the upstream end of the full-width turn lane.
3. Use raised pavement marker Type I-C with undivided highways, flush medians and two way left turn lanes. Use raised pavement marker Type II-C-R with divided highways and raised medians.
4. Length of turn bays, including taper, deceleration, and storage lengths shall be as shown on the plans or as directed by the Engineer. See Chapter 3 of the Roadway Design Manual for additional information on turning lanes or storage lengths.

MATERIAL SPECIFICATIONS	
PAVEMENT MARKERS (REFLECTORIZED)	DMS-4200
EPOXY AND ADHESIVES	DMS-6100
BITUMINOUS ADHESIVE FOR PAVEMENT MARKERS	DMS-6130
TRAFFIC PAINT	DMS-8200
HOT APPLIED THERMOPLASTIC	DMS-8220
PERMANENT PREFABRICATED PAVEMENT MARKINGS	DMS-8240

All pavement marking materials shall meet the required Departmental Material Specifications as specified by the plans.

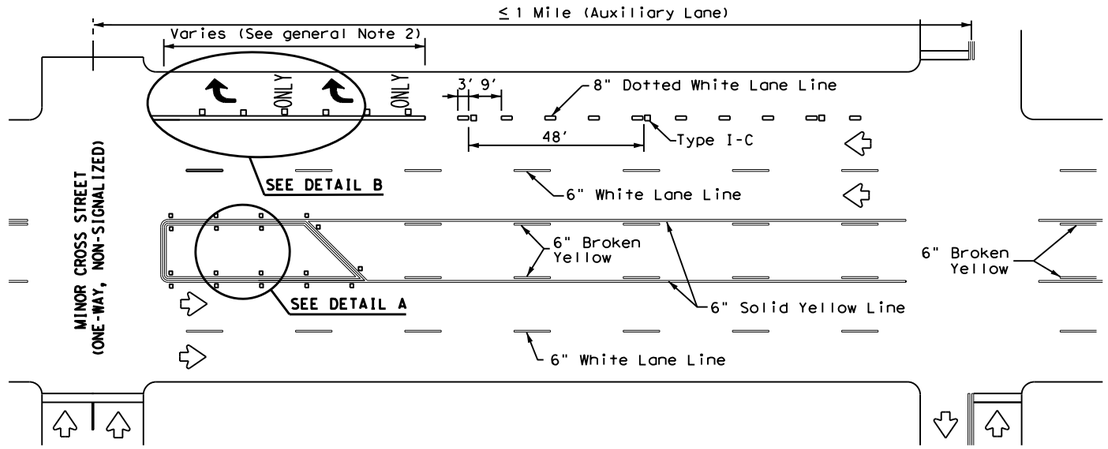

TYPICAL TWLTL AT ONE-WAY STREET AND RIGHT TURN AUXILIARY LANE

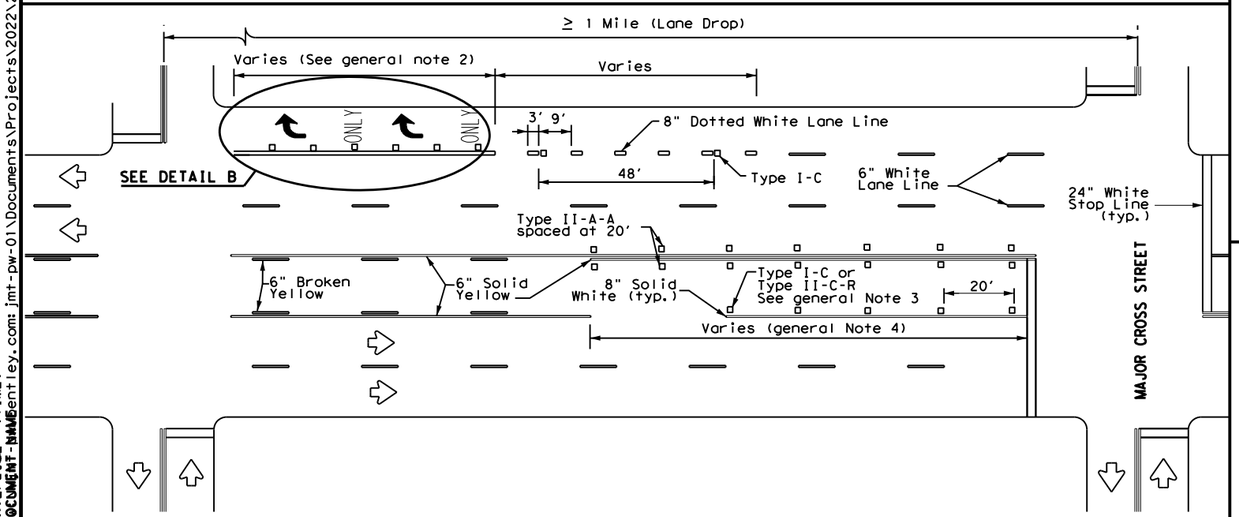

TYPICAL TWLTL AT TWO-WAY CROSS STREET AND RIGHT TURN LANE DROP

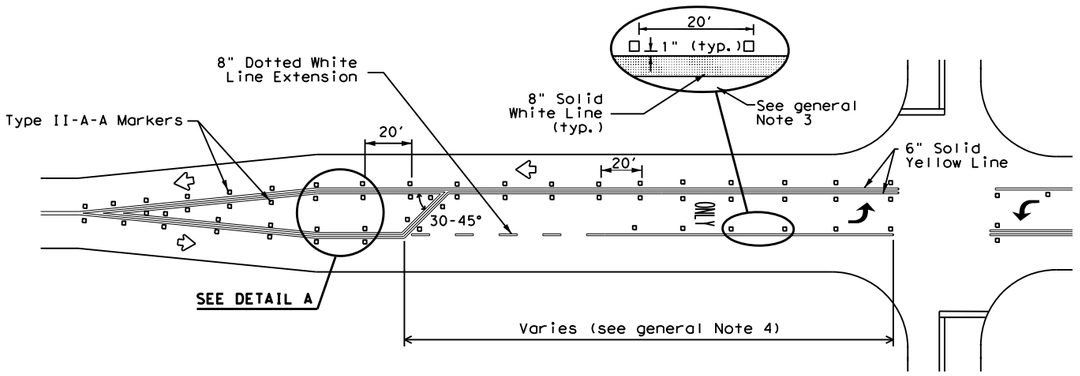

TYPICAL TWO-LANE ROADWAY INTERSECTION WITH LEFT TURN BAYS

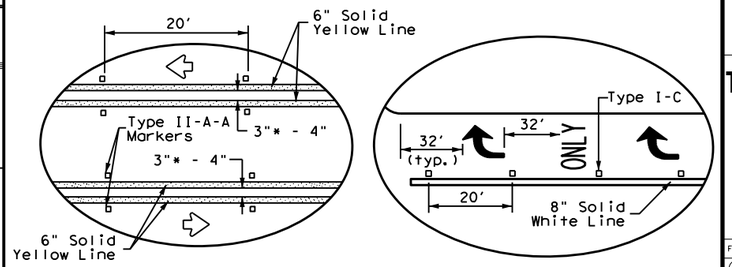

* 2" minimum allowed for restripe projects when approved by the Engineer.

Texas Department of Transportation

Traffic Safety Division Standard

TWO-WAY LEFT TURN LANES, RURAL LEFT TURN BAYS, AND LANE REDUCTION PAVEMENT MARKINGS PM(3)-22

FILE: pm3-22.dgn	DN:	CK:	DW:	CK:
©TxDOT December 2022	CONT	SECT	JOB	HIGHWAY
REVISIONS 4-98 3-03 6-20 5-00 2-10 12-22 8-00 2-12	DIST	COUNTY		SHEET NO.
		WILLIAMSON		54

22C

DISCLAIMER: The use of this standard is governed by the "Texas Engineering Practice Act". No warranty of any kind is made by TxDOT for any purpose whatsoever. TxDOT assumes no responsibility for the conversion of this standard to other formats or for incorrect results or damages resulting from its use.

SIGN SUPPORT DESCRIPTIVE CODES

(Descriptive Codes correspond to project estimate and quantities sheets)

SM RD SGN ASSM TY XXXXX(X)XX(X-XXXX)

Post Type

FRP = Fiberglass Reinforced Plastic Pipe (see SMD(FRP))
TWT = Thin-Walled Tubing (see SMD(TWT))
10BWG = 10 BWG Tubing (see SMD(SLIP-1) to (SLIP-3))
S80 = Schedule 80 Pipe (see SMD(SLIP-1) to (SLIP-3))

Number of Posts (1 or 2)

Anchor Type

UA = Universal Anchor - Concreted (see SMD(FRP) and (TWT))
UB = Universal Anchor - Bolted down (see SMD(FRP) and (TWT))
WS = Wedge Anchor Steel - (see SMD(TWT))
WP = Wedge Anchor Plastic (see SMD(TWT))
SA = Slipbase - Concreted (see SMD(SLIP-1) to (SLIP-3))
SB = Slipbase - Bolted Down (see SMD(SLIP-1) to (SLIP-3))

Sign Mounting Designation

P = Prefab. "Plain" (see SMD(SLIP-1) to (SLIP-3), (TWT), (FRP))
T = Prefab. "T" (see SMD(SLIP-1) to (SLIP-3), (TWT))
U = Prefab. "U" (see SMD(SLIP-1) to (SLIP-3))
IF REQUIRED
1EXT or 2EXT = Number of Extensions (see SMD(SLIP-1) to (SLIP-3), (TWT))
BM = Extruded Wind Beam (see SMD(SLIP-1) to (SLIP-3))
WC = 1.12 #/ft Wing Channel (see SMD(SLIP-1) to (SLIP-3))
EXAL = Extruded Aluminum Sign Panels (see SMD(SLIP-3))

REQUIRED CLEARANCE FOR BREAKAWAY SUPPORT

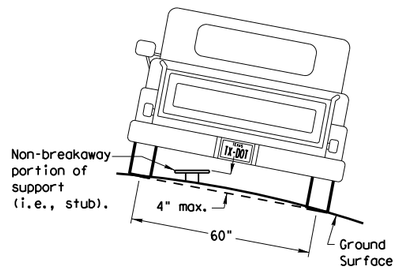

To avoid vehicle undercarriage snagging, any substantial remains of a breakaway support, when it is broken away, should not project more than 4 inches above a 60-inch chord (i.e., typical space between wheel paths).

SIGN LOCATION

PAVED SHOULDERS

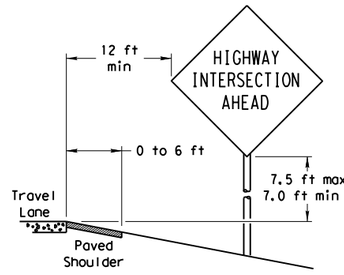

LESS THAN 6 FT. WIDE

When the shoulder is 6 ft. or less in width, the sign must be placed at least 12 ft. from the edge of the travel lane.

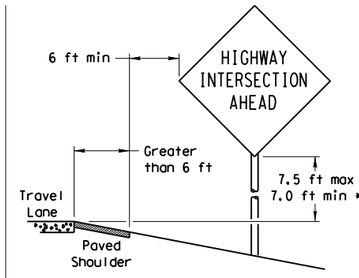

GREATER THAN 6 FT. WIDE

When the shoulder is greater than 6 ft in width, the sign must be placed at least 6 ft. from the edge of the shoulder.

BEHIND BARRIER

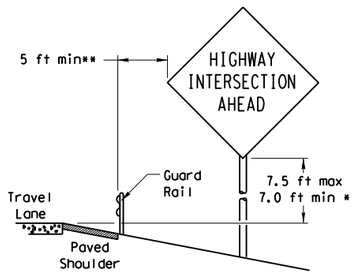

BEHIND GUARDRAIL

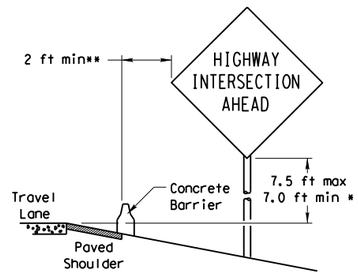

BEHIND CONCRETE BARRIER

**Sign clearance based on distance required for proper guard rail or concrete barrier performance.

T-INTERSECTION

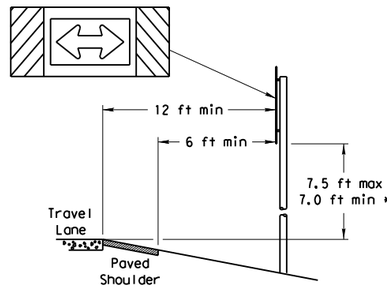

When this sign is needed at the end of a two-lane, two way roadway, the right edge of the sign should be in line with the centerline of the roadway. Place as close to ROW as practical.

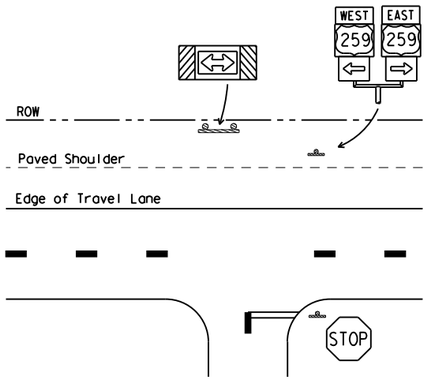

* Signs shall be mounted using the following condition that results in the greatest sign elevation:

(1) a minimum of 7 to a maximum of 7.5 feet above the edge of the travel lane or

(2) a minimum of 7 to a maximum of 7.5 feet above the grade at the base of the support when sign is installed on the backslope.

The maximum values may be increased when directed by the Engineer.

See the Traffic Operations Division website for detailed drawings of sign clamps, Triangular Slipbase System components and Wedge Anchor System components.

The website address is:
http://www.txdot.gov/publications/traffic.htm

No more than 2 sign posts should be located within a 7 ft. circle.

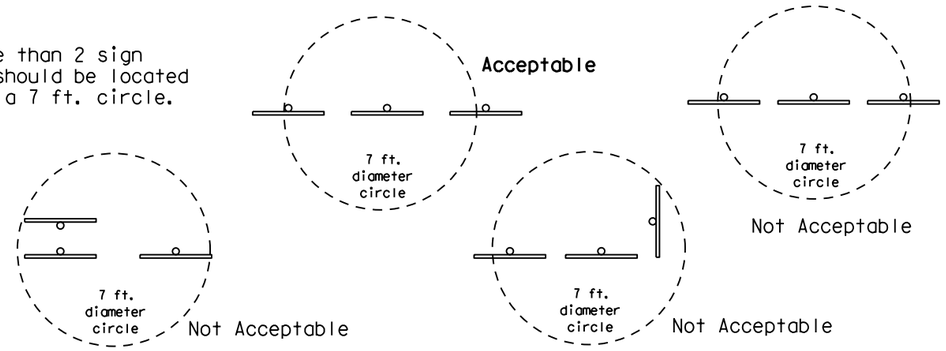

TYPICAL SIGN ATTACHMENT DETAIL

Single Signs

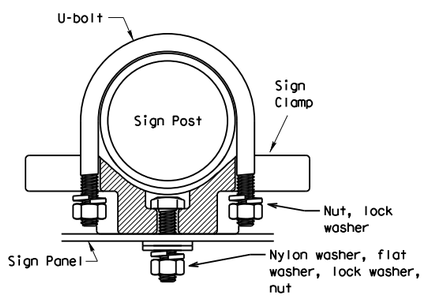

Bolts used to mount sign panels to the clamp are 5/16-18 UNC galvanized square head with nut, nylon washer, flat washer and lock washer. The bolt length is 1 inch for aluminum.

When two sign clamps are used to mount signs back-to-back, use a 5/16-18 UNC galvanized hex head per ASTM A307 with nut and helical-spring lock washer. The approximate bolt lengths for various post sizes and sign clamp types are given in the table at right. The bolt length may need to be adjusted depending upon field conditions.

Sign clamps may be either the specific size clamp or the universal clamp.

Back-to-Back Signs

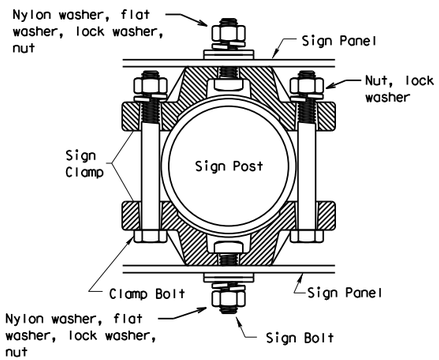

Pipe Diameter	Approximate Bolt Length	
	Specific Clamp	Universal Clamp
2" nominal	3"	3 or 3 1/2"
2 1/2" nominal	3 or 3 1/2"	3 1/2 or 4"
3" nominal	3 1/2 or 4"	4 1/2"

SIGNS WITH PLAQUES

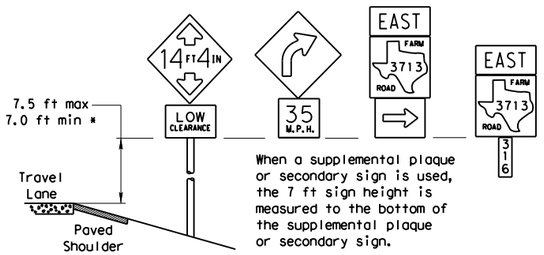

When a supplemental plaque or secondary sign is used, the 7 ft sign height is measured to the bottom of the supplemental plaque or secondary sign.

CURB & GUTTER OR RAISED ISLAND

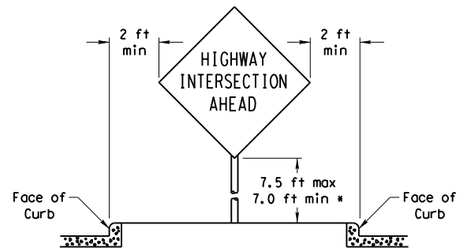

RESTRICTED RIGHT-OF-WAY

(When 6 ft min. is not possible.)

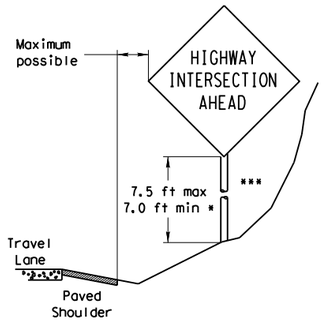

Right-of-way restrictions may be created by rocks, water, vegetation, forest, buildings, a narrow island, or other factors.

In situations where a lateral restriction prevents the minimum horizontal clearance from the edge of the travel lane, signs should be placed as far from the travel lane as practical.

*** Post may be shorter if protected by guardrail or if Engineer determines the post could not be hit due to extreme slope.

Texas Department of Transportation
Traffic Operations Division

SIGN MOUNTING DETAILS SMALL ROADSIDE SIGNS GENERAL NOTES & DETAILS

SMD(GEN)-08

©TxDOT July 2002	DN: TXDOT	CK: TXDOT	DW: TXDOT	CK: TXDOT
9-08 REVISIONS	CONT	SECT	JOB	HIGHWAY
	DIST	COUNTY		SHEET NO.
		WILLIAMSON		55

26A

DATE: 1/15/2025
FILE: pw:\\jmt-pw.bentley.com:jmt-pw-01\Documents\Projects\2022\22-01219-001\Design\4 - Design\Plan Set\8. Traffic\Sign Standards\smd(gen)-08.dgn

DISCLAIMER: The use of this standard is governed by the "Texas Engineering Practice Act". No warranty of any kind is made by TxDOT for any purpose whatsoever. TxDOT assumes no responsibility for the conversion of this standard to other formats or for incorrect results or damages resulting from its use.

DATE: 1/15/2025
FILE: pw:\\jmt-pw.bentley.com:jmt-pw-01\Documents\Projects\2022\22-01219-001\Design\4 - Design\Plan Set\8. Traffic\Sign Standards\smd(slip)-1.dgn

TRIANGULAR SLIPBASE INSTALLATION GENERAL REQUIREMENTS

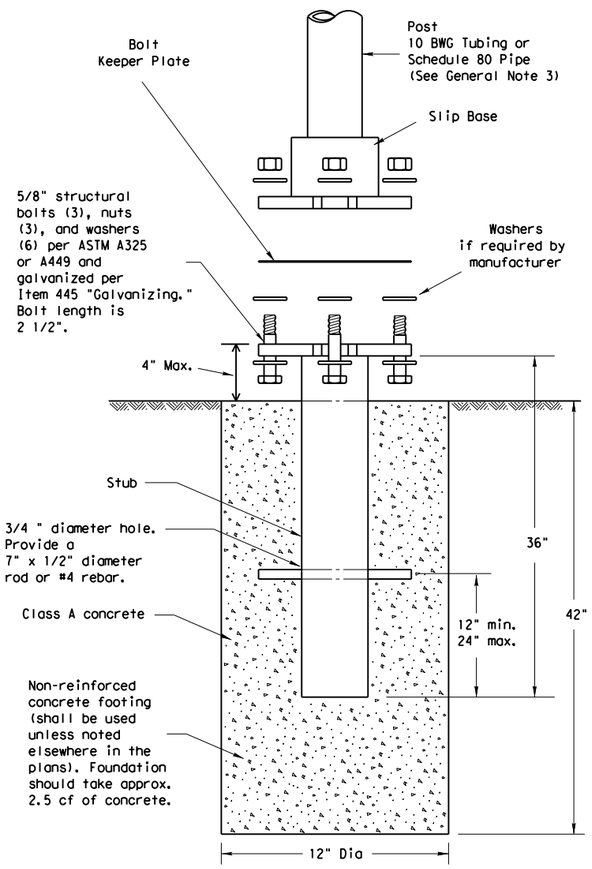

SM RD SGN ASSM TY XXXXX(X)SA(X-XXXX)

NOTE

There are various devices approved for the Triangular Slipbase System. Please reference the Material Producer List for approved slip base systems. http://www.txdot.gov/business/producer_list.htm The devices shall be installed per manufacturers' recommendations. Installation procedures shall be provided to the Engineer by Contractor.

GENERAL NOTES:

1. Slip base shall be permanently marked to indicate manufacturer. Method, design, and location of marking are subject to approval of the TxDOT Traffic Standards Engineer.
2. Material used as post with this system shall conform to the following specifications:
   10 BWG Tubing (2.875" outside diameter)
   - 0.134" nominal wall thickness
   - Seamless or electric-resistance welded steel tubing or pipe
   - Steel shall be HSLAS Gr 55 per ASTM A1011 or ASTM A1008
   - Other steels may be used if they meet the following:
     - 55,000 PSI minimum yield strength
     - 70,000 PSI minimum tensile strength
     - 20% minimum elongation in 2"
   - Wall thickness (uncoated) shall be within the range of 0.122" to 0.138"
   - Outside diameter (uncoated) shall be within the range of 2.867" to 2.883"
   - Galvanization per ASTM A123 or ASTM A653 G210. For precoated steel tubing (ASTM A653), recoat tube outside diameter weld seam by metallizing with zinc wire per ASTM B833.

   Schedule 80 Pipe (2.875" outside diameter)
   - 0.276" nominal wall thickness
   - Steel tubing per ASTM A500 Gr C
   - Other seamless or electric-resistance welded steel tubing or pipe with equivalent outside diameter and wall thickness may be used if they meet the following:
     - 46,000 PSI minimum yield strength
     - 62,000 PSI minimum tensile strength
     - 21% minimum elongation in 2"
   - Wall thickness (uncoated) shall be within the range of 0.248" to 0.304"
   - Outside diameter (uncoated) shall be within the range of 2.855" to 2.895"
   - Galvanization per ASTM A123
3. See the Traffic Operations Division website for detailed drawings of sign clamps and Texas Universal Triangular Slipbase System components. The website address is: http://www.txdot.gov/publications/traffic.htm
4. Sign supports shall not be spliced except where shown. Sign support posts shall not be spliced.

ASSEMBLY PROCEDURE

Foundation
1. Prepare 12-inch diameter by 42-inch deep hole. If solid rock is encountered, the depth of the foundation may be reduced such that it is embedded a minimum of 18 inches into the solid rock.
2. The Engineer may permit batches of concrete less than 2 cubic yards to be mixed with a portable, motor-driven concrete mixer. For small placements less than 0.5 cubic yards, hand mixing in a suitable container may be allowed by Engineer. Concrete shall be Class A.
3. Push the pipe end of the slip base stub into the center of the concrete. Rotate the stub back and forth while pushing it down into the concrete to assure good contact between the concrete and stub. Continue to work the stub into the concrete until it is between 2 to 4 inches above the ground.
4. Plumb the stub. Allow a minimum of 4 days to set, unless otherwise directed by the Engineer.
5. The triangular slipbase system is multidirectional and is designed to release when struck from any direction.

Support
1. Cut support so that the bottom of the sign will be 7 to 7.5 feet above the edge of the travelway (i.e., edge of the closest lane) when slip plate is below the edge of pavement or 7 to 7.5 feet above slip plate when the slip plate is above the edge of the travelway. The cut shall be plumb and straight.
2. Attach sign to support using connections shown. When multiple signs are installed on the same support, ensure the minimum clearance between each sign is maintained. See SMD(SLIP-2) for clearances based on sign types.

CONCRETE ANCHOR

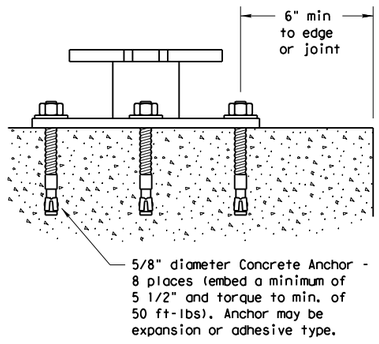

SM RD SGN ASSM TY XXXXX(X)SB(X-XXXX)

Concrete anchor consists of 5/8" diameter stud bolt with UNC series bolt threads on the upper end. Heavy hex nut per ASTM A563, and hardened washer per ASTM F436. The stud bolt shall have a minimum yield and ultimate tensile strength of 50 and 75 KSI, respectively. Nuts, bolts and washers shall be galvanized per Item 445, "Galvanizing." Adhesive type anchors shall have stud bolts installed with Type III epoxy per DMS-6100, "Epoxies and Adhesives." Adhesive anchors may be loaded after adequate epoxy cure time per the manufacturer's recommendations. Top of bolt shall extend at least flush with top of the nut when installed. The anchor, when installed in 4000 psi normal-weight concrete with a 5 1/2" minimum embedment, shall have a minimum allowable tension and shear of 3900 and 3100 psi, respectively.

Texas Department of Transportation
Traffic Operations Division

SIGN MOUNTING DETAILS
SMALL ROADSIDE SIGNS
TRIANGULAR SLIPBASE SYSTEM

SMD(SLIP-1)-08

© TxDOT July 2002

DN: TXDOT	CK: TXDOT	DW: TXDOT	CK: TXDOT

CONT	SECT	JOB	HIGHWAY

DIST	COUNTY	SHEET NO.
	WILLIAMSON	56

9-08 REVISIONS

DISCLAIMER: The use of this standard is governed by the "Texas Engineering Practice Act". No warranty of any kind is made by TxDOT for any purpose whatsoever. TxDOT assumes no responsibility for the conversion of this standard to other formats or for incorrect results or damages resulting from its use.

DATE: 1/15/2025
FILE: pw:\\jmt-pw.bentley.com:jmt-pw-01\Documents\Projects\2022\22-01219-001\Design\4 - Design\Plan Set\8. Traffic\Sign Standards\smd(slip)-2.dgn

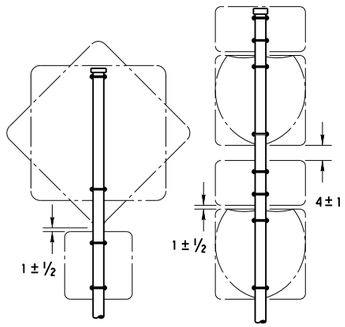

SM RD SGN ASSM TY XXXXX(1)XX(P)

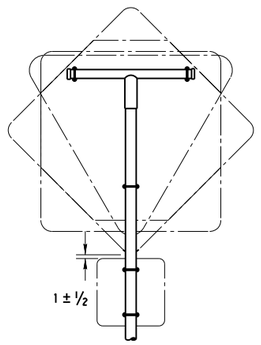

SM RD SGN ASSM TY XXXXX(1)XX(T)

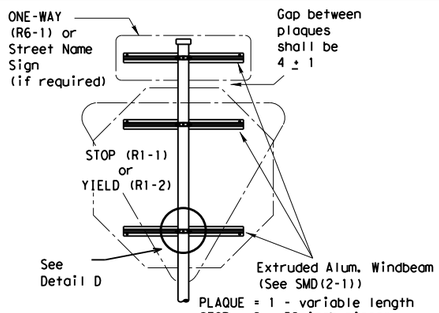

PLAQUE = 1 - variable length
STOP = 2 - 32 inch pieces
YIELD = 1 - 8 inch piece & 1 - 32 inch piece

SM RD SGN ASSM TY XXXXX(1)XX(P-BM)

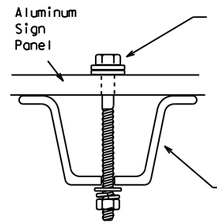

Top View

Detail A

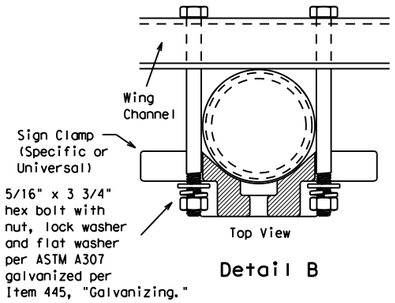

Top View

Detail B

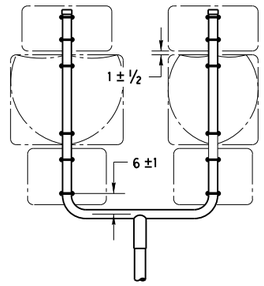

SM RD SGN ASSM TY XXXXX(1)XX(U)

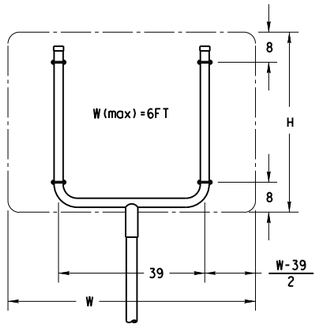

SM RD SGN ASSM TY XXXXX(1)XX(U)

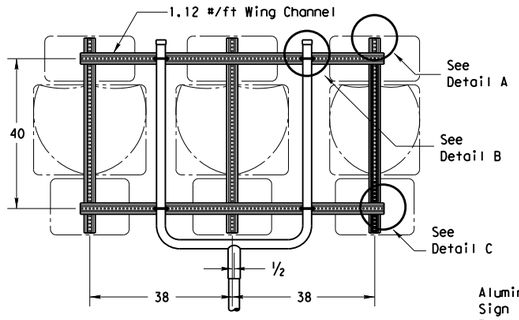

SM RD SGN ASSM TY XXXXX(1)XX(U-WC)
(See Note 11)

Drill 7/16" hole (through) after assembly and install bolt, nut, 2 flat washers and lock washer.

3/8" x 3 1/2" heavy hex bolt with nut, lock washer and 2 flat washers per ASTM A307 galvanized per Item 445 "Galvanizing."

1 1/2"

Extender

U-Bracket

Detail F

Splices shall only be allowed behind the sign substrate.

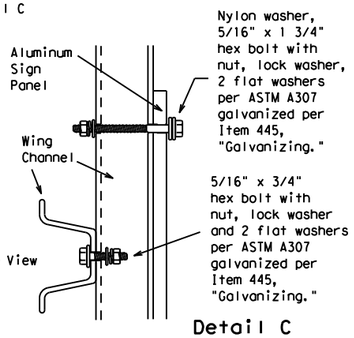

Detail C

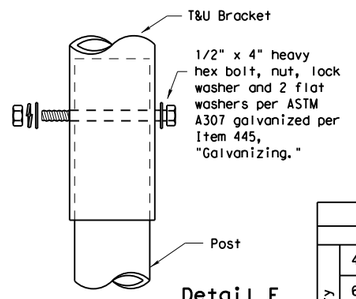

Detail E

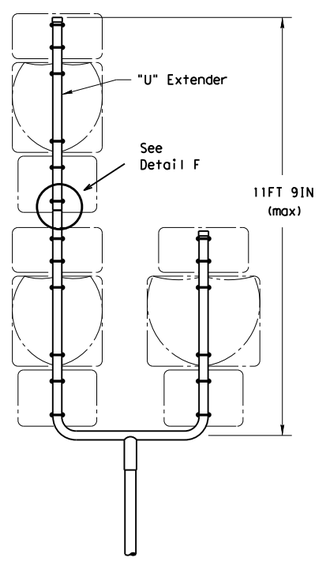

SM RD SGN ASSM TY S80(1)XX(U-1EXT)

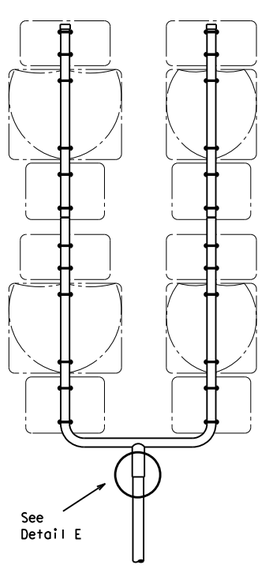

SM RD SGN ASSM TY S80(1)XX(U-2EXT)

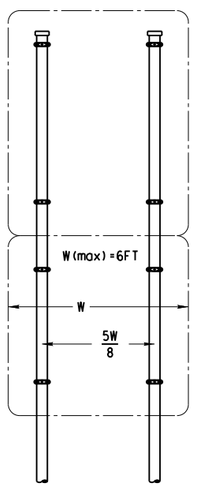

SM RD SGN ASSYM TY XXXXX(2)XX(P)

SIDE VIEW

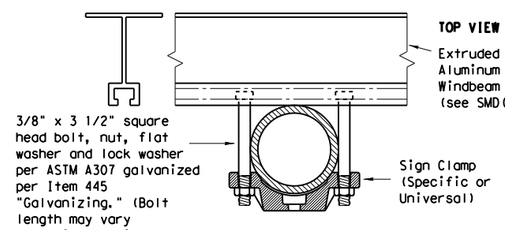

Detail D

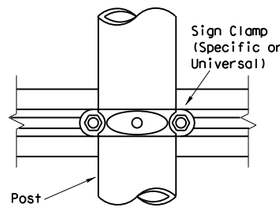

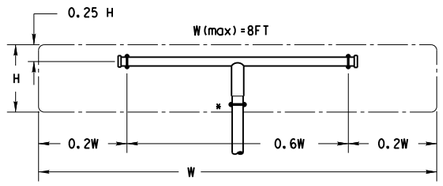

SM RD SGN ASSM TY XXXXX(1)XX(T)
(* - See Note 12)

All dimensions are in english unless detailed otherwise.

FRICTION CAP DETAIL

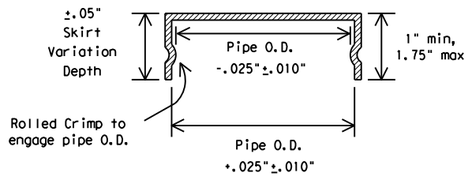

Friction caps may be manufactured from hot rolled or cold rolled steel sheets. The minimum sheet metal thickness shall be 24 gauge for all cap sizes.

The rim edges shall be reasonably straight and smooth. Caps shall be sized and formed in such a manner as to produce a drive-on friction fit and have no tendency to rock when seated on the pipe. The depth shall be sufficient to give positive protection against entrance of rainwater. They shall be free of sharp creases or indentations and show no evidence of metal fracture.

Caps shall have an electrodeposited coating of zinc in accordance with the requirements of ASTM B633 Class FE/ZN 8.

GENERAL NOTES:

1.

SIGN SUPPORT	# OF POSTS	MAX. SIGN AREA
10 BWG	1	16 SF
10 BWG	2	32 SF
Sch 80	1	32 SF
Sch 80	2	64 SF

2. The Engineer may require that a Schedule 80 post be used in place of a 10 BWG where a sign height is abnormally high due to a fill slope.
3. Sign supports shall not be spliced except where shown. Sign support posts shall not be spliced.
4. Aluminum sign blanks shall conform to Departmental Material Specifications DMS-7110 and shall have the following minimum thicknesses: 0.080 for signs less than 7.5 sq. ft., 0.100 for signs 7.5 to 15 sq. ft., and 0.125 for signs greater than 15 sq. ft.
5. Signs that require specific supports due to reasons in addition to windloading are indicated on the "REQUIRED SUPPORT" table on this sheet.
6. For horizontal rectangular signs fabricated from flat aluminum, T-brackets are used for signs 24 inches or less in height. U-brackets are used for signs of greater height.
7. When two triangular slipbase supports are used to support a single sign, they shall not be "rigidly" connected to each other except through the sign panel. This will allow each support to act independently when impacted by an errant vehicle.
8. Wing channel shall meet ASTM A 1011 SS Gr 50 and be galvanized per ASTM A 123.
9. Excess pipe, wing channel, or windbeam shall be cut off so that it does not extend beyond the sign panel (i.e., excess support shall not be visible when the sign is viewed from the front.) Repair galvanized coating at cut support ends per Item 445, "Galvanizing."
10. Additional route markers may be added vertically, provided the total sign area does not exceed the maximum allowable amount per Note 1.
11. Additional sign clamp required on the "T-bracket" post for 24 inch height signs. Place the clamp 3 inches above bottom of sign when possible.
12. Post open ends shall be fitted with Friction Caps.
13. Sign blanks shall be the sizes and shapes shown on the plans.

REQUIRED SUPPORT

	SIGN DESCRIPTION	SUPPORT
Regulatory	48-inch STOP sign (R1-1)	TY 10BWG(1)XX(T) TY 10BWG(1)XX(P-BM)
	60-inch YIELD sign (R1-2)	TY 10BWG(1)XX(T) TY 10BWG(1)XX(P-BM)
	48x16-inch ONE-WAY sign (R6-1)	TY 10BWG(1)XX(T) TY 10BWG(1)XX(P-BM)
	36x48, 48x36, and 48x48-inch signs	TY 10BWG(1)XX(T)
	48x60-inch signs	TY S80(1)XX(T)
Warning	48x48-inch signs (diamond or square)	TY 10BWG(1)XX(T)
	48x60-inch signs	TY S80(1)XX(T)
	48-inch Advance School X-ing sign (S1-1)	TY 10BWG(1)XX(T)
	48-inch School X-ing sign (S2-1)	TY 10BWG(1)XX(T)
	Large Arrow sign (W1-6 & W1-7)	TY 10BWG(1)XX(T)

Texas Department of Transportation
Traffic Operations Division

SIGN MOUNTING DETAILS SMALL ROADSIDE SIGNS TRIANGULAR SLIPBASE SYSTEM

SMD(SLIP-2)-08

©TxDOT July 2002

DN: TXDOT	CK: TXDOT	DW: TXDOT	CK: TXDOT
CONT	SECT	JOB	HIGHWAY
DIST	COUNTY		SHEET NO.
	WILLIAMSON		57

9-08 REVISIONS

26C

DISCLAIMER: The use of this standard is governed by the "Texas Engineering Practice Act". No warranty of any kind is made by TxDOT for any purpose whatsoever. TxDOT assumes no responsibility for the conversion of this standard to other formats or for incorrect results or damages resulting from its use.

DATE: 5/15/2025
FILE: pw:\\jmt-pw.bentley.com:jmt-pw-01\Documents\Projects\2022\22-01219-001\Design\4 - Design\Plan Set\8. Traffic\Sign Standards\smd(slip)-3.dgn

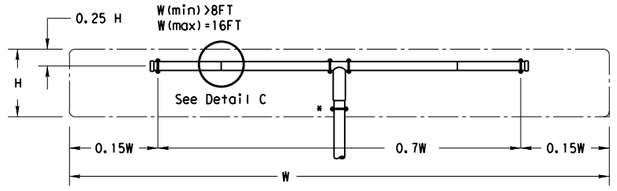

SM RD SGN ASSM TY XXXXX(1)XX(T-2EXT)
(* - See Note 12)

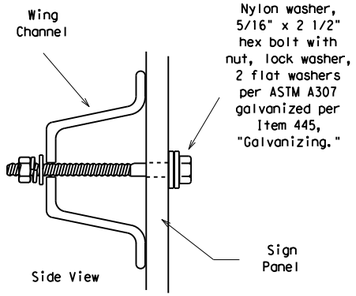

Detail B

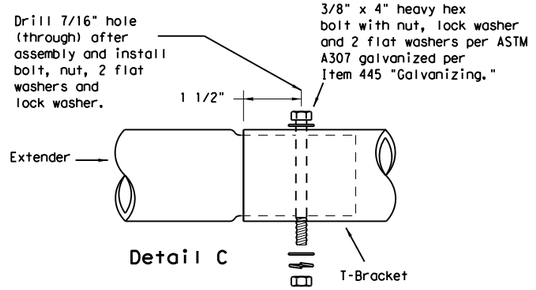

Detail C

Splices shall only be allowed behind the sign substrate.

GENERAL NOTES:

1.

SIGN SUPPORT	# OF POSTS	MAX. SIGN AREA
10 BWG	1	16 SF
10 BWG	2	32 SF
Sch 80	1	32 SF
Sch 80	2	64 SF

2. The Engineer may require that a Schedule 80 post be used in place of a 10 BWG where a sign height is abnormally high due to a fill slope.
3. Sign supports shall not be spliced except where shown. Sign support posts shall not be spliced.
4. Aluminum sign blanks shall conform to Departmental Material Specifications DMS-7110 and shall have the following minimum thicknesses: 0.080 for signs less than 7.5 sq. ft., 0.100 for signs 7.5 to 15 sq. ft., and 0.125 for signs greater than 15 sq. ft.
5. Signs that require specific supports due to reasons in addition to windloading are indicated on the "REQUIRED SUPPORT" table on this sheet.
6. For horizontal rectangular signs fabricated from flat aluminum, T-brackets are used for signs 24 inches or less in height. U-brackets are used for signs of greater height.
7. When two triangular slipbase supports are used to support a single sign, they shall not be "rigidly" connected to each other except through the sign panel. This will allow each support to act independently when impacted by an errant vehicle.
8. Wing channel shall meet ASTM A 1011 SS Gr 50 and be galvanized per ASTM A 123.
9. Excess pipe, wing channel, or windbeam shall be cut off so that it does not extend beyond the sign panel (i.e., excess support shall not be visible when the sign is viewed from the front.) Repair galvanized coating at cut support ends per Item 445, "Galvanizing."
10. Sign blanks shall be the sizes and shapes shown on the plans.
11. Additional sign clamp required on the "T-bracket" post for 24 inch high signs. Place the clamp 3 inches above bottom of sign when possible.
12. Post open ends shall be fitted with Friction Caps.

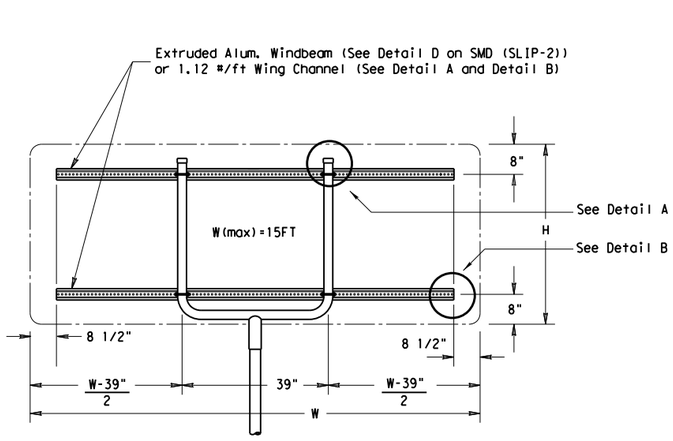

SM RD SGN ASSM TY XXXXX(1)XX(U-XX)

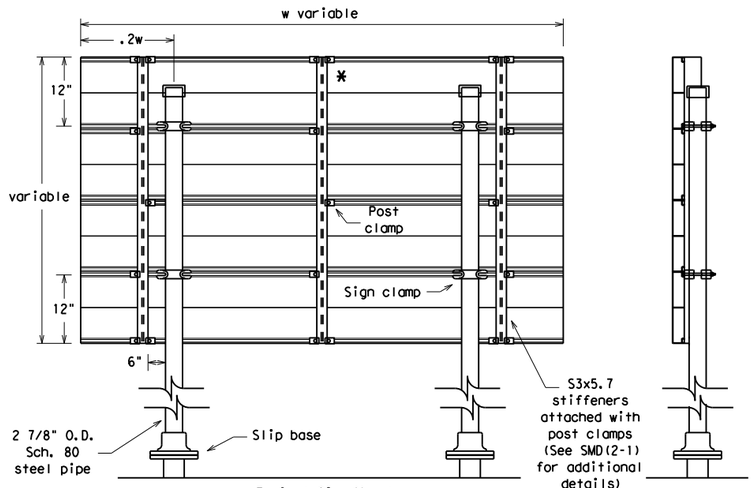

Typical Sign Mount

SM RD SGN ASSM TY S80(2)XX(P-EXAL)

* Additional stiffener placed at approximate center of signs when sign width is greater than 10'.

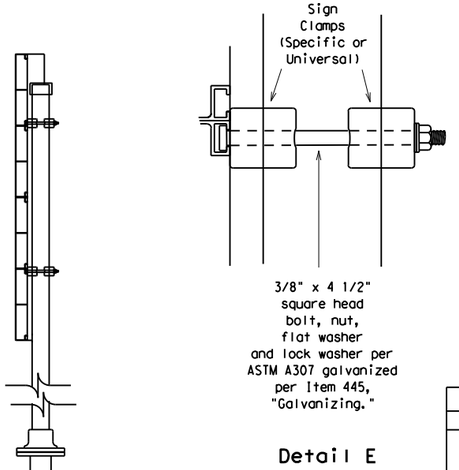

Detail E

See Detail E for clamp installation

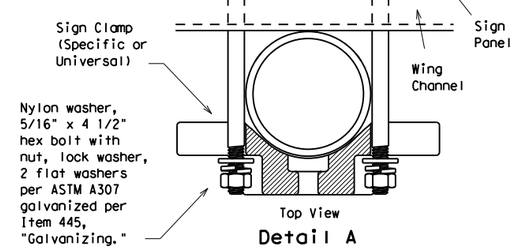

Detail A

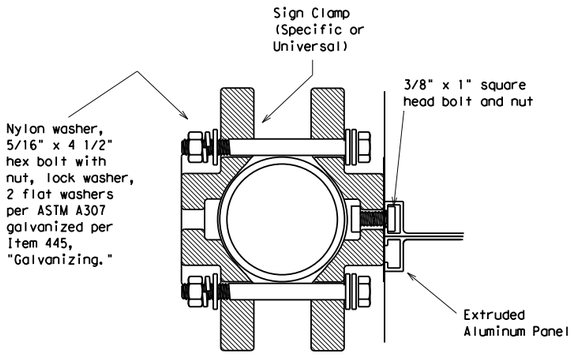

Detail D
EXTRUDED ALUMINUM SIGN WITH T BRACKET

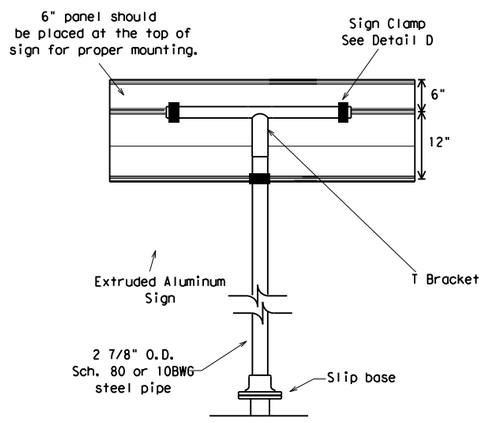

Extruded Aluminum Sign
With T Bracket

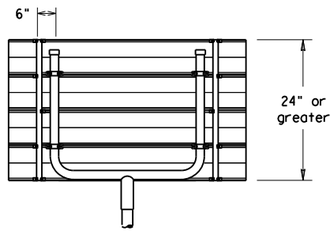

Use Extruded Alum. Windbeam as stiffeners
See SMD (2-1) for additional details

See Detail E
for clamp installation

REQUIRED SUPPORT		
	SIGN DESCRIPTION	SUPPORT
Regulatory	48-inch STOP sign (R1-1)	TY 10BWG(1)XX(T) TY 10BWG(1)XX(P-BM)
	60-inch YIELD sign (R1-2)	TY 10BWG(1)XX(T) TY 10BWG(1)XX(P-BM)
	48x16-inch ONE-WAY sign (R6-1)	TY 10BWG(1)XX(T) TY 10BWG(1)XX(P-BM)
	36x48, 48x36, and 48x48-inch signs	TY 10BWG(1)XX(T)
	48x60-inch signs	TY S80(1)XX(T)
Warning	48x48-inch signs (diamond or square)	TY 10BWG(1)XX(T)
	48x60-inch signs	TY S80(1)XX(T)
	48-inch Advance School X-ing sign (S1-1)	TY 10BWG(1)XX(T)
	48-inch School X-ing sign (S2-1)	TY 10BWG(1)XX(T)
	Large Arrow sign (W1-6 & W1-7)	TY 10BWG(1)XX(T)

Texas Department of Transportation
Traffic Operations Division

SIGN MOUNTING DETAILS SMALL ROADSIDE SIGNS TRIANGULAR SLIPBASE SYSTEM

SMD(SLIP-3)-08

©TxDOT July 2002

DN: TXDOT	CK: TXDOT	DW: TXDOT	CK: TXDOT
CONT	SECT	JOB	HIGHWAY
DIST	COUNTY		SHEET NO.
	WILLIAMSON		58

9-08 REVISIONS

26D

DISCLAIMER:
The use of this standard is governed by the "Texas Engineering Practice Act". No warranty of any kind is made by TxDOT for any purpose whatsoever. TxDOT assumes no responsibility for the conversion of this standard to other formats or for incorrect results from its use.
DATE:1/15/2025
FILE:pw:\\jmt-pw.bentley.com:jmt-pw-01\Documents\Projects\2022\22-01219-001\Design\Standards\TSR\tsr3-13.dgn

REQUIREMENTS FOR INDEPENDENT MOUNTED ROUTE SIGNS

SHEETING REQUIREMENTS		
USAGE	COLOR	SIGN FACE MATERIAL
BACKGROUND	WHITE	TYPE A SHEETING
BACKGROUND	ALL OTHERS	TYPE B OR C SHEETING
LEGEND & BORDERS	WHITE	TYPE A SHEETING
LEGEND & BORDERS	BLACK	ACRYLIC NON-REFLECTIVE FILM
LEGEND & BORDERS	ALL OTHERS	TYPE B or C SHEETING



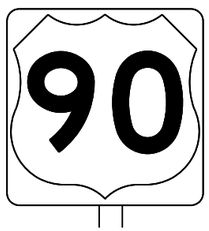



TYPICAL EXAMPLES

REQUIREMENTS FOR BLUE, BROWN & GREEN D AND I SERIES GUIDE SIGNS

SHEETING REQUIREMENTS		
USAGE	COLOR	SIGN FACE MATERIAL
BACKGROUND	ALL	TYPE B OR C SHEETING
LEGEND & BORDERS	WHITE	TYPE D SHEETING
LEGEND, SYMBOLS & BORDERS	ALL OTHERS	TYPE B OR C SHEETING

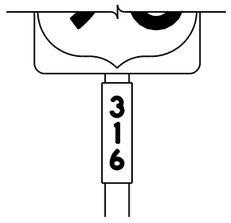









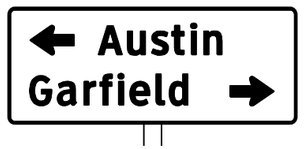

TYPICAL EXAMPLES

GENERAL NOTES

1. Signs to be furnished shall be as detailed elsewhere in the plans and/or as shown on sign tabulation sheet. Standard sign designs and arrow dimensions can be found in the "Standard Highway Sign Designs for Texas" (SHSD).
2. White legend shall use the Clearview Alphabet. The following Clearview fonts shall be used to replace the existing white Federal Highway Administration (FHWA) Standard Highway Alphabets, when not specified in the SHSD, or in the plans.

B	CV-1W
C	CV-2W
D	CV-3W
E	CV-4W
Emod	CV-5WR
F	CV-6W

3. Route sign legend (ie. IH, US, SH and FM shields) shall use the Federal Highway Administration (FHWA) Standard Highway Alphabets B, C, D, E, Emod or F).
4. Lateral spacing between letters and numerals shall conform with the SHSD, and any approved changes thereto. Lateral spacing of legend shall provide a balanced appearance when spacing is not shown.
5. Independent mounted route sign with white or colored legend and borders shall be applied by screening process with transparent color ink, transparent colored overlay film to white background sheeting or cut-out white sheeting to colored background sheeting, or combination thereof. White legend, symbols and borders on all other signs shall be cut-out white sheeting applied to colored background sheeting.
6. Information regarding borders and radii for signs is found in the "Standard Highway Sign Designs for Texas". Dimensions shown and described for borders and corner radii on parent sign are nominal. Borders may vary in width as much as 1/2 inch. Corner radii above 3 inches may vary in width as much as 1 inch. Borders and corner radii within a parent sign must be of matching widths. The sign area outside the corner radius should be trimmed or rounded.
7. Sign substrate shall be any material that meets the Departmental Material Specification requirements of DMS-7110 or approved alternative.
8. Mounting details of roadside signs are shown in the "SMD series" Standard Plan Sheets.

DEPARTMENTAL MATERIAL SPECIFICATIONS	
ALUMINUM SIGN BLANKS	DMS-7110
SIGN FACE MATERIALS	DMS-8300

ALUMINUM SIGN BLANKS THICKNESS	
Square Feet	Minimum Thickness
Less than 7.5	0.080
7.5 to 15	0.100
Greater than 15	0.125

The Standard Highway Sign Designs for Texas (SHSD) can be found at the following website.

http://www.txdot.gov/

Texas Department of Transportation

Traffic Operations Division Standard

TYPICAL SIGN REQUIREMENTS

TSR(3)-13

FILE: tsr3-13.dgn	DN: TxDOT	CK: TxDOT	DW: TxDOT	CK: TxDOT
©TxDOT October 2003	CONT	SECT	JOB	HIGHWAY
REVISIONS				
12-03 7-13	DIST	COUNTY		SHEET NO.
9-08		WILLIAMSON		59

3

REQUIREMENTS FOR RED BACKGROUND REGULATORY SIGNS

(STOP, YIELD, DO NOT ENTER AND WRONG WAY SIGNS)

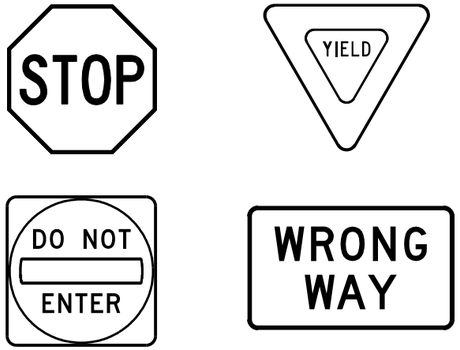

REQUIREMENTS FOR FOUR SPECIFIC SIGNS ONLY

SHEETING REQUIREMENTS		
USAGE	COLOR	SIGN FACE MATERIAL
BACKGROUND	RED	TYPE B OR C SHEETING
BACKGROUND	WHITE	TYPE B OR C SHEETING
LEGEND & BORDERS	WHITE	TYPE B OR C SHEETING
LEGEND	RED	TYPE B OR C SHEETING

REQUIREMENTS FOR WHITE BACKGROUND REGULATORY SIGNS

(EXCLUDING STOP, YIELD, DO NOT ENTER AND WRONG WAY SIGNS)



TYPICAL EXAMPLES

SHEETING REQUIREMENTS		
USAGE	COLOR	SIGN FACE MATERIAL
BACKGROUND	WHITE	TYPE A SHEETING
BACKGROUND	ALL OTHERS	TYPE B OR C SHEETING
LEGEND, BORDERS AND SYMBOLS	BLACK	ACRYLIC NON-REFLECTIVE FILM
LEGEND, BORDERS AND SYMBOLS	ALL OTHER	TYPE B OR C SHEETING

REQUIREMENTS FOR WARNING SIGNS

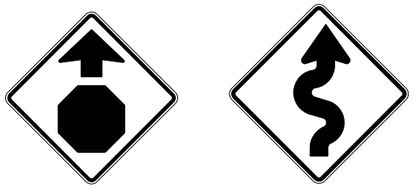

TYPICAL EXAMPLES

SHEETING REQUIREMENTS		
USAGE	COLOR	SIGN FACE MATERIAL
BACKGROUND	FLOURESCENT YELLOW	TYPE B_{FL} OR C_{FL} SHEETING
LEGEND & BORDERS	BLACK	ACRYLIC NON-REFLECTIVE FILM
LEGEND & SYMBOLS	ALL OTHER	TYPE B OR C SHEETING

REQUIREMENTS FOR SCHOOL SIGNS



TYPICAL EXAMPLES

SHEETING REQUIREMENTS		
USAGE	COLOR	SIGN FACE MATERIAL
BACKGROUND	WHITE	TYPE A SHEETING
BACKGROUND	FLOURESCENT YELLOW GREEN	TYPE B_{FL} OR C_{FL} SHEETING
LEGEND, BORDERS AND SYMBOLS	BLACK	ACRYLIC NON-REFLECTIVE FILM
SYMBOLS	RED	TYPE B OR C SHEETING

GENERAL NOTES

1. Signs to be furnished shall be as detailed elsewhere in the plans and/or as shown on sign tabulation sheet. Standard sign designs and arrow dimensions can be found in the "Standard Highway Sign Designs for Texas" (SHSD).
2. Sign legend shall use the Federal Highway Administration (FHWA) Standard Highway Alphabets (B, C, D, E, Emod or F).
3. Lateral spacing between letters and numerals shall conform with the SHSD, and any approved changes thereto. Lateral spacing of legend shall provide a balanced appearance when spacing is not shown.
4. Black legend and borders shall be applied by screening process or cut-out acrylic non-reflective black film to background sheeting, or combination thereof.
5. White legend and borders shall be applied by screening process with transparent colored ink, transparent colored overlay film to white background sheeting or cut-out white sheeting to colored background sheeting, or combination thereof.
6. Colored legend shall be applied by screening process with transparent colored ink, transparent colored overlay film or colored sheeting to background sheeting, or combination thereof.
7. Sign substrate shall be any material that meets the Departmental Material Specification requirements of DMS-7110 or approved alternative.
8. Mounting details for roadside mounted signs are shown in the "SMD series" Standard Plan Sheets.

ALUMINUM SIGN BLANKS THICKNESS	
Square Feet	Minimum Thickness
Less than 7.5	0.080
7.5 to 15	0.100
Greater than 15	0.125

DEPARTMENTAL MATERIAL SPECIFICATIONS	
ALUMINUM SIGN BLANKS	DMS-7110
SIGN FACE MATERIALS	DMS-8300

The Standard Highway Sign Designs for Texas (SHSD) can be found at the following website.

http://www.txdot.gov/

Texas Department of Transportation

Traffic Operations Division Standard

TYPICAL SIGN REQUIREMENTS

TSR(4)-13

FILE: tsr4-13.dgn	DN: TxDOT	CK: TxDOT	DW: TxDOT	CK: TxDOT
© TxDOT October 2003	CONT	SECT	JOB	HIGHWAY
REVISIONS 12-03 7-13 9-08	DIST	COUNTY WILLIAMSON		SHEET NO. 60

4

DISCLAIMER:
The use of this standard is governed by the "Texas Engineering Practice Act". No warranty of any kind is made by TxDOT for any purpose whatsoever. TxDOT assumes no responsibility for the conversion of this standard to other formats or for incorrect results or damages resulting from its use.

DATE:1/15/2025
FILE:pw:\\jmt-pw.bentley.com:jmt-pw-01\Documents\Projects\2022\22-01219-001\Design\Design Standards\TSR4-13.dgn

DISCLAIMER:
The use of this standard is governed by the "Texas Engineering Practice Act". No warranty of any kind is made by TxDOT for any purpose whatsoever. TxDOT assumes no responsibility for the conversion of this standard to other formats or for incorrect results or damages resulting from its use.

DATE: 1/15/2025
FILE: pw:\\jmt-pw.bentley.com:jmt-pw-01\Documents\Projects\2022\22-01219-001\Design\Standards\tsr5-13.dgn

ARROW DETAILS

for Large Ground-Mounted and Overhead Guide Signs

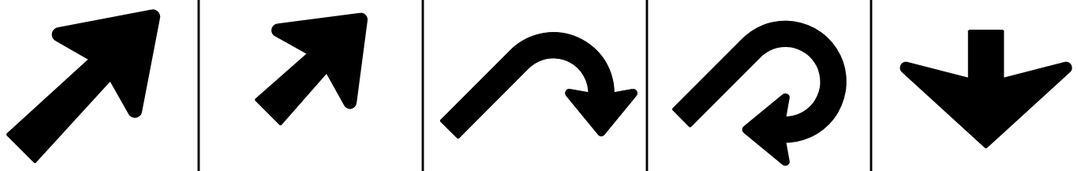

TYPE	LETTER SIZE	USE
A-1	10.67" U/L and 10" Caps	Single Lane Exits
A-2	13.33" U/L and 12" Caps	
A-3	16" & 20" U/L	
B-1	10.67" U/L and 10" Caps	Multiple Lane Exits
B-2	13.33" U/L and 12" Caps	
B-3	16" & 20" U/L	

CODE	USED ON SIGN NO.
E-3	E5-1aT
E-4	E5-1bT

NOTE

Arrow dimensions are shown in the "Standard Highway Sign Designs for Texas" manual.

The Standard Highway Sign Designs for Texas (SHSD) can be found at the following website.

http://www.txdot.gov/

SIGN BLANK PUNCHING DETAILS FOR ATTACHMENTS WHEN SPECIFIED TO BE TYPE A ALUMINUM SIGNS (FOR MOUNTING TO GUIDE SIGN FACE)

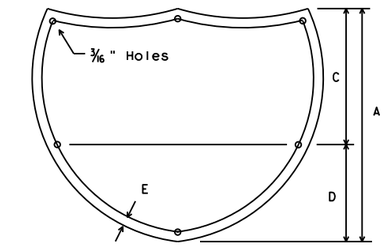

INTERSTATE ROUTE MARKERS

A	C	D	E
36	21	15	1 1/2
48	28	20	1 3/4

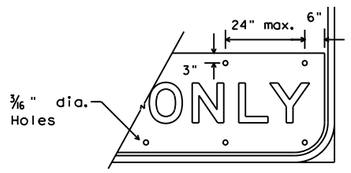

EXIT ONLY PANEL

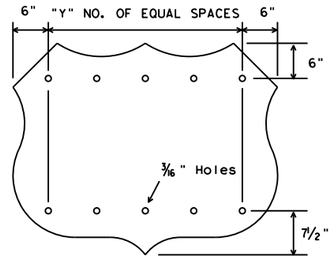

U.S. ROUTE MARKERS

Sign Size	"Y"
24x24	2
30x24	3
36x36	3
45x36	4
48x48	4
60x48	5

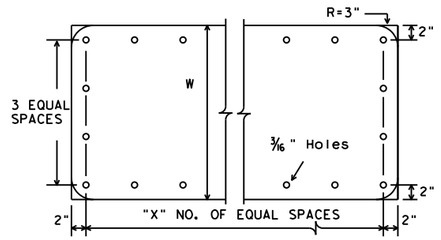

STATE ROUTE MARKERS

No. of Digits	W	X
4	24	4
4	36	5
4	48	6
3	24	3
3	36	4
3	48	5

MOUNTING DETAILS OF ATTACHMENTS TO GUIDE SIGN FACE ("EXIT ONLY" AND "LEFT EXIT" PANELS, ROUTE MARKERS AND OTHER ATTACHMENTS)

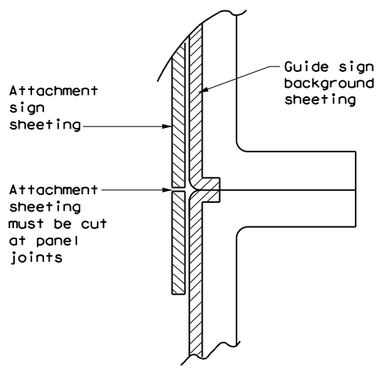

DIRECT APPLIED ATTACHMENT

NOTE:

1. Sheeting for legend, symbols, and borders must be cut at panel joints.
2. Direct applied attachment signs will be subsidiary to "Aluminum Signs" or "Fiberglass Signs".

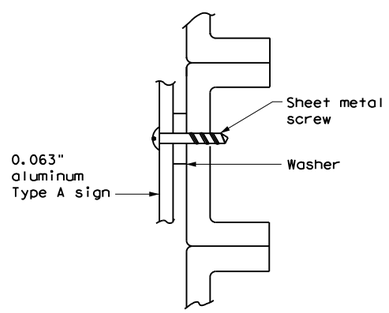

SCREW ATTACHMENT

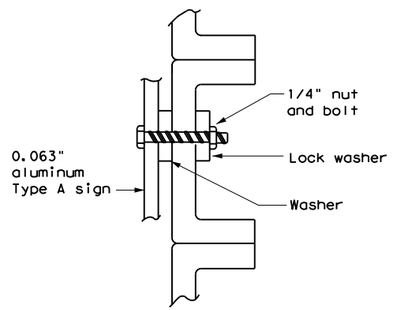

NUT/BOLT ATTACHMENT

NOTE:

Furnish Type A aluminum sign attachments only when specified in the plans. These signs will be paid for under "Aluminum Signs".

ARROW DETAILS

for Destination Signs (Type D)

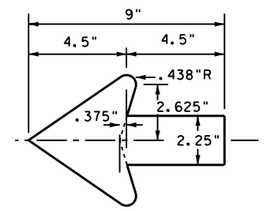

Standard arrow to be used with 6 inch letters.

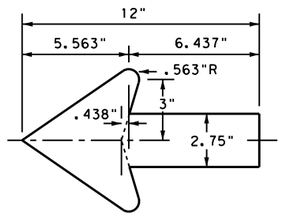

Standard arrow to be used with 8 inch letters.

Texas Department of Transportation

Traffic Operations Division Standard

TYPICAL SIGN REQUIREMENTS

TSR(5)-13

FILE: tsr5-13.dgn	DN: TxDOT	CK: TxDOT	DW: TxDOT	CK: TxDOT
©TxDOT October 2003	CONT	SECT	JOB	HIGHWAY
REVISIONS				
12-03 7-13	DIST	COUNTY		SHEET NO.
9-08		WILLIAMSON		61

5

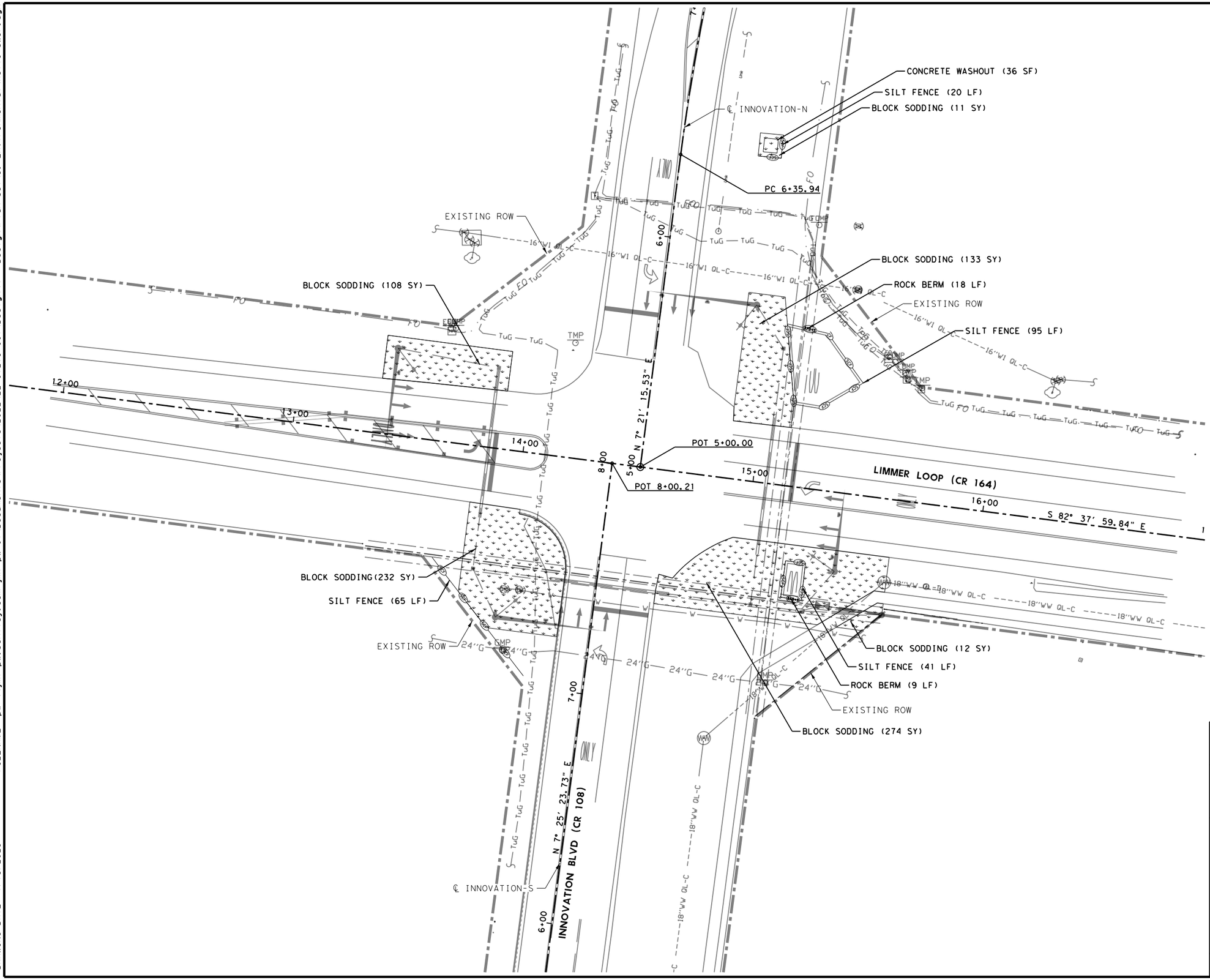

HORZ 0' 20' 40'
SCALE IN FEET

LEGEND

- BLOCK SODDING
- SCF — SILT FENCE
- RPD*2 — ROCK BERM

NOTES:

1. EROSION CONTROL DEVICES SHALL BE INSTALLED PRIOR TO THE START OF ANY CONSTRUCTION ACTIVITY AND SHALL REMAIN IN PLACE UNTIL CONSTRUCTION IS COMPLETE AND SITE IS STABILIZED.
2. EROSION CONTROL DEVICE INSTALLATION, MAINTENANCE, AND REMOVAL SHALL BE IN ACCORDANCE WITH CITY OF HUTTO STANDARDS FOR EROSION CONTROL.
3. LOCATIONS OF EROSION CONTROL DEVICES ARE APPROXIMATE. ACTUAL LOCATIONS TO BE DETERMINED BY THE ENGINEER.
4. EROSION CONTROL DEVICES SHALL BE INSPECTED AFTER MAJOR RAIN EVENTS TO ENSURE THAT THEY ARE FUNCTIONING PROPERLY. ADDITIONALLY, STANDING WATER SHALL ALSO BE REMOVED AT THIS TIME.

STATE OF TEXAS
ELLIOT R. CUDE
131513
LICENSED PROFESSIONAL ENGINEER

1/15/2025

CITY OF HUTTO

JMT
TBPE FIRM REG. NO. F-16341

CITY OF HUTTO
TRAFFIC SIGNAL PROJECT
LIMMER LOOP AND INNOVATION BLVD

LIMMER LOOP AND INNOVATION BLVD
STORM WATER POLLUTION PREVENTION PLAN

SCALE 1" = 40' SHEET 1 OF 1

(C) 2024	STATE	CITY	COUNTY	SHEET NO.
	TEXAS	HUTTO	WILLIAMSON	62

DRAWING DATE: 1/15/2025 FILENAME: pw:\\jmt-pw.bentley.com:jmt-pw-01\Documents\Projects\2022\22-01219-001\Design\4 - Design\Plan Set\9. Environmental\HUTTO*SW3P.dgn

The City of Hutto
Erosion and Sediment and Tree Protection Notes
Updated November 2023

Erosion and Sediment Controls:

1. The contractor shall install and maintain erosion and sediment controls and tree and natural area protective fencing prior to any site preparation work (clearing, grubbing, grading, or excavation).
2. If applicable, compliance with the Texas Pollutant Discharge Elimination System (TPDES) Construction General Permit TXR150000 including the development and implementation of a Stormwater Pollution Prevention Plan (SWP3) is required.
3. Erosion and sediment controls shall be installed in accordance with the approved erosion and sediment control plan. Deviations from the approved plan must be submitted to and approved by the owner's representative.
4. Field revisions to the erosion and sediment control plan may be required by the city inspector to address control inadequacies. These revisions shall be documented in the SWP3, if applicable.
5. Compliance with Federal, State, and local environmental regulations/requirements is required where applicable.
6. Stormwater best management practices will be regulated by the SWP3, as appropriate.
7. The contractor shall inspect erosion and sediment controls at: (a) weekly intervals **or** (b) once every fourteen (14) calendar days and within 24 hours of the end of a storm event of $\geq$ 0.5 inches to ensure they are functioning properly. Any accumulated sediment at controls must be removed when the depth reached is six inches (6").
8. All mud, dirt, rocks, debris, etc., spilled, tracked, or otherwise deposited on existing paved streets, drives and areas used by the public shall be cleaned up by scraping and/or sweeping by the end of the day. Washing into ditches or storm sewers is unacceptable.
9. The contractor is required to make any repairs or modifications necessary to ensure continued effective operation of the erosion and sediment controls.
10. If erosion and sediment control systems are existing from prior contracts, owner's representative and the contractor are to examine the existing erosion and sediment controls for damage prior to construction. Any damage to preexisting erosion and sediment controls noted to be repaired at the owner's expense.

Pollution Prevention Measures

1. No above and/or below ground temporary fuel storage facilities are to be stored on the project site.
2. Intentional release of vehicle or equipment fluids onto the ground is not allowed. Contaminated soil resulting from an accidental spill has to be removed and disposed of properly.
3. All concrete trucks must use an approved washout station.

Tree Protection:

1. Erosion and sediment controls shall be installed or maintained in a manner which does not result in soil buildup within tree drip line.
2. Where a fence is closer than four feet (4') to a tree trunk, protect the trunk with strapped-on planking to a height of eight feet (8'), or the limits of lower branching, in addition to the fencing.
3. Trees shall be removed in a manner which does not impact trees to be preserved.
4. Any root exposed by the construction activity shall be pruned flush with the soil. Backfill root area with good quality topsoil as soon as possible. If exposed root areas are not backfilled within two days, cover them with organic matter in a manner which reduces soil temperature and minimizes water loss due to evaporation.
5. To avoid soil compaction, the contractor shall not allow vehicular traffic, parking, or storage of equipment or materials in the tree drip line area.
6. Contractor shall prune vegetation to provide clearance for structure, vehicular traffic, and equipment before damage occurs (ripping of branches, etc.). All finished pruning to be done according to recognized, approved standards of the industry (reference the "National Arborist Association Pruning Standards for Shade Trees").
7. Where there is to be an approved grade change, impermeable paving surface, tree well, or other such site development immediately adjacent to a protected tree, erect the fence approximately two to four feet (2'-4') behind the area in question.

Permanent Erosion Controls :

1. All disturbed areas to be restored as noted below.
2. All disturbed areas are to be permanently stabilized as required by the TCEQ CGP TXR150000 or by local requirements, whichever is more stringent.
3. The contractor shall hydromulch or sod all exposed cuts and fills upon completion of construction, except where cuts are made of solid rock.
4. Seeding for permanent erosion control shall be applied over areas disturbed by construction as follows:
    a. From October to February, seeding shall be with a combination of one pound (1 lb.) of unhulled Bermuda grass and seven pounds (7 lbs.) of winter rye per 1,000 square feet with a purity of 95% with 90% germination.
    b. From March to September, seeding shall be done with the addition of winter fescue (Kentucky 31) at a rate of 100 lbs./acre. Grass shall be common Bermuda grass, hulled, minimum 82% pure live seed.
5. All grass seed shall be free from noxious weed, grade "A" recent crop, cleaned and treated with appropriate fungicide at time of mixing. Seed shall be furnished in sealed, standard containers with dealer's guaranteed analysis.
6. The planted area must be irrigated or sprinkled in a manner that will not erode the topsoil, but will sufficiently soak the soil to a depth of six inches (6"). Irrigation will occur

CITY OF HUTTO

JMT

TBPE FIRM REG. NO. F-16341

CITY OF HUTTO
TRAFFIC SIGNAL PROJECT
LIMMER LOOP AND INNOVATION BLVD

EROSION CONTROL NOTES AND STANDARDS

SHEET 1 OF 3

(C) 2024	STATE	CITY	COUNTY	SHEET NO.
	TEXAS	HUTTO	WILLIAMSON	63

FILENAME: pw:\\jmt-pw.bentley.com:jmt-pw-01\Documents\Projects\2022\22-01219-001\Design\4 - Design\Plan Set\9. Environmental\HUTTO*EC-DET01.dgn
DRAWING DATE: 1/15/2025

at 10-day intervals during the first two months to insure germination and establishment of the grass. Rainfall occurrences of half an inch (1/2") or greater shall postpone the water schedule for one week.

7. Mulch type used shall be either cellulose fiber mulch applied at a rate of 2,000 pounds per acre, or wood fiber mulch applied at a rate of 2,500 pounds per acre.
8. Restoration shall be acceptable when the grass has grown at least one inch to one and a half inches (1" to 1.5") high with 95% coverage, provided no bare spots larger than ten-square feet exist.
9. A minimum of four inches (4") of topsoil shall be placed in all areas disturbed by construction.
10. The contractor shall remove all temporary erosion and sediment controls at the completion of the project and when vegetation has been restored.

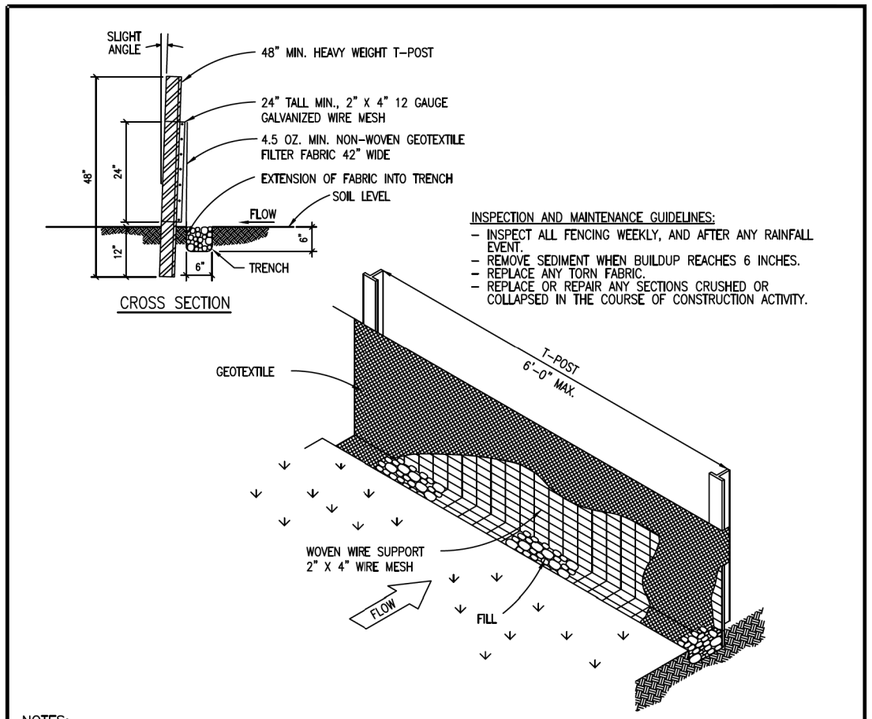

NOTES:

1. STEEL POSTS WHICH SUPPORT THE SILT FENCE SHALL BE INSTALLED ON A SLIGHT ANGLE TOWARD THE ANTICIPATED RUNOFF SOURCE. POST MUST BE EMBEDDED A MIN. OF ONE (1') FOOT.
2. THE TOE OF THE SILT FENCE SHALL BE TRENCHED IN WITH A SPADE OR MECHANICAL TRENCHER, SO THAT THE DOWNSLOPE FACE OF THE TRENCH IS FLAT AND PERPENDICULAR TO THE LINE OF FLOW. WHERE FENCE CANNOT BE TRENCHED IN (E.G. PAVEMENT) WEIGHT FABRIC FLAP WITH WASHED GRAVEL ON UPHILL SIDE TO PREVENT FLOW UNDER FENCE.
3. THE TRENCH MUST BE A MINIMUM OF 6 INCHES DEEP AND 6 INCHES WIDE TO ALLOW FOR THE SILT FENCE FABRIC TO BE LAID IN THE GROUND AND BACKFILLED WITH COMPACTED MATERIAL.
4. SILT FENCE SHALL BE SECURELY FASTENED TO EACH STEEL SUPPORT POST OR TO WOVEN WIRE, WHICH IN TURN IS SECURELY FASTENED TO THE STEEL FENCE POSTS.
5. INSPECTION SHALL BE MADE WEEKLY OR AFTER EACH RAINFALL EVENT AND REPAIR OR REPLACEMENT SHALL BE MADE PROMPTLY AS NEEDED.
6. SILT FENCE SHALL BE REMOVED WHEN THE SITE IS COMPLETELY STABILIZED SO AS NOT TO BLOCK OR IMPEDE STORM FLOW OR DRAINAGE.
7. ACCUMULATED SILT SHALL BE REMOVED WHEN IT REACHES A DEPTH OF 6 INCHES. THE SILT SHALL BE DISPOSED OF IN AN APPROVED SITE AND IN SUCH A MANNER AS TO NOT CONTRIBUTE TO ADDITIONAL SILTATION.
8. SILT FENCE SHALL BE REMOVED AS SOON AS THE SOURCE OF SEDIMENT IS STABILIZED
9. J-HOOKS SHALL BE USED WHEN THE SILT FENCE IS INSTALLED AT AN ANGLE OF 30 DEGREES OR GREATER FROM PARALLEL TO THE CONTOURS.

The City of Hutto Construction Standards and Details	CURRENT AS OF 10/01/2023	SILT FENCE	
CITY OF HUTTO		THE ARCHITECT/ENGINEER ASSUMES RESPONSIBILITY FOR APPROPRIATE USE OF THIS STANDARD.	STANDARD NO. CH-ESC-03

CITY OF HUTTO

JMT TBPE FIRM REG. NO. F-16341

CITY OF HUTTO
TRAFFIC SIGNAL PROJECT
LIMMER LOOP AND INNOVATION BLVD

EROSION CONTROL NOTES AND STANDARDS

SHEET 2 OF 3

(C) 2024	STATE	CITY	COUNTY	SHEET NO.
	TEXAS	HUTTO	WILLIAMSON	64

FILENAME: pw:\\jmt-pw.bentley.com:jmt-pw-01\Documents\Projects\2022\22-01219-001\Design\4 - Design\Plan Set\9. Environmental\HUTTO*EC-DET02.dgn
DRAWING DATE: 1/15/2025

FILENAME: pw:\\jmt-pw.bentley.com:jmt-pw-01\Documents\Projects\2022\22-01219-001\Design\4 - Design\Plan Set\9. Environmental\HUTTO*EC-DET03
DRAWING DATE: 1/15/2025

CROSS SECTION A-A

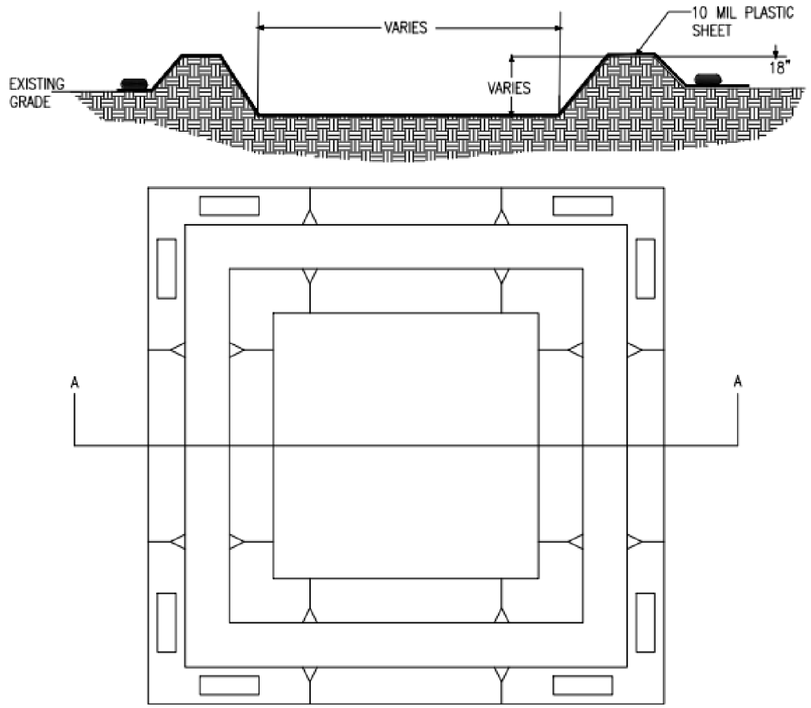

NOTES:
1. SET LENGTH AND WIDTH AS NECESSARY TO PROVIDE ADEQUATE SPACE FOR WASHOUT ACTIVITIES.
2. IF RESTRICTED BY DEPTH DUE TO BELOW GRADE APPURTENANCES, PLACE EARTHEN BERMS AT GRADE.
3. USE EXCAVATED MATERIAL TO CREATE EARTHEN BERMS SURROUNDING THE AREA TO BE DESIGNATED AS A CONCRETE WASHOUT.
4. USE 3" – 5" ROCK TO CREATE A STABLE ENTRANCE THAT IS GRADED AWAY FROM THE WASHOUT BASIN.
5. INSTALL A SIGN IDENTIFYING THE RESPONSIBLE PARTY FOR INSTALLATION AND MAINTENANCE OF THE WASHOUT.
6. PLACE 10MIL OR GREATER PLASTIC SHEETING.
7. SECURE SHEETING ON OUTSIDE OF BERM AREA USING SAND BAGS OR ROCK EQUIVALENT.

The City of Hutto Construction Standards and Details	CURRENT AS OF 10/01/2023	CONCRETE WASHOUT
HUTTO	THE ARCHITECT/ENGINEER ASSUMES RESPONSIBILITY FOR APPROPRIATE USE OF THIS STANDARD.	STANDARD NO. CH-ESC-06

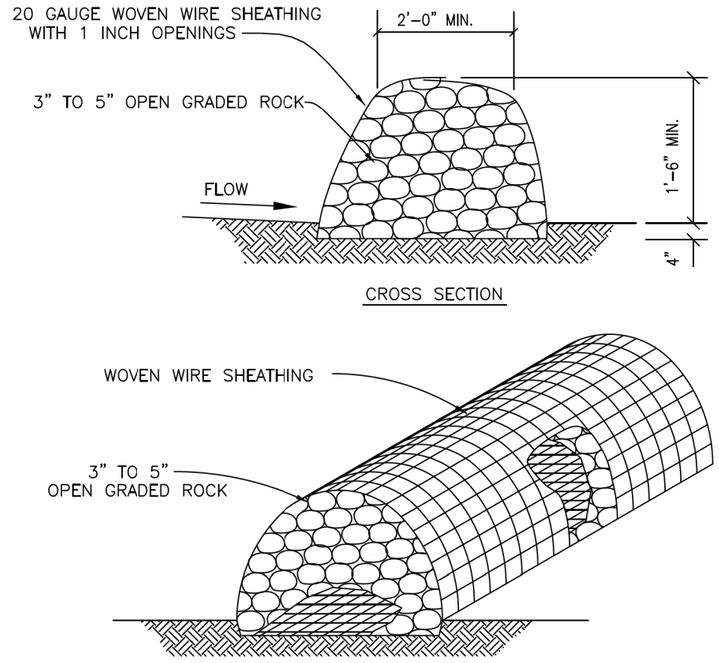

CROSS SECTION

NOTES:

1. USE ONLY OPEN GRADED ROCK (3 to 5") DIAMETER FOR ALL CONDITIONS.
2. THE ROCK BERM SHALL BE SECURED WITH A WOVEN WIRE SHEATHING HAVING MAXIMUM 1" OPENING AND MINIMUM WIRE DIAMETER OF 20 GAUGE.
3. THE ROCK BERM SHALL BE INSPECTED DAILY OR AFTER EACH RAIN, AND THE STONE AND/ OR FABRIC CORE–WOVEN SHEATHING SHALL BE REPLACED WHEN THE STRUCTURE CEASES TO FUNCTION AS INTENDED, DUE TO SEDIMENT ACCUMULATION AMONG THE ROCKS, WASHOUT, CONSTRUCTION TRAFFIC DAMAGE, ETC.
4. IF SEDIMENT REACHES A DEPTH OF 6", THE SEDIMENT SHALL BE REMOVED AND DISPOSED OF ON AN APPROVED SITE AND IN A MANNER THAT WILL NOT CREATE A SEDIMENTATION PROBLEM.
5. WHEN THE SITE IS COMPLETELY STABILIZED, THE BERM AND ACCUMULATED SEDIMENT SHALL BE REMOVED AND DISPOSED OF IN AN APPROVED MANNER.

The City of Hutto Construction Standards and Details	CURRENT AS OF 10/01/2023	ROCK BERM
HUTTO	THE ARCHITECT/ENGINEER ASSUMES RESPONSIBILITY FOR APPROPRIATE USE OF THIS STANDARD.	STANDARD NO. CH-ESC-05

HUTTO
JMT
TBPE FIRM REG. NO. F-16341

CITY OF HUTTO
TRAFFIC SIGNAL PROJECT
LIMMER LOOP AND INNOVATION BLVD

EROSION CONTROL NOTES AND STANDARDS

SHEET 3 OF 3

(C) 2024	STATE	CITY	COUNTY	SHEET NO.
	TEXAS	HUTTO	WILLIAMSON	65

DISCLAIMER:
The use of this standard is governed by the "Texas Engineering Practice Act". No warranty of any kind is made by TxDOT for any purpose whatsoever. TxDOT assumes no responsibility for the conversion of this standard to other formats or for incorrect results or damages resulting from its use.

DATE:
FILE:

I. STORMWATER POLLUTION PREVENTION-CLEAN WATER ACT SECTION 402

TPDES TXR 150000: Stormwater Discharge Permit or Construction General Permit required for projects with 1 or more acres disturbed soil. Projects with any disturbed soil must protect for erosion and sedimentation in accordance with Item 506.

List MS4 Operator(s) that may receive discharges from this project. They may need to be notified prior to construction activities.

1. N/A

2.

☐ No Action Required ☒ Required Action

Action No.

1. Prevent stormwater pollution by controlling erosion and sedimentation in accordance with TPDES Permit TXR 150000

2. Comply with the SW3P and revise when necessary to control pollution or required by the Engineer.

3. Post Construction Site Notice (CSN) with SW3P information on or near the site, accessible to the public and TCEQ, EPA or other inspectors.

4. When Contractor project specific locations (PSL's) increase disturbed soil area to 5 acres or more, submit NOI to TCEQ and the Engineer.

II. WORK IN OR NEAR STREAMS, WATERBODIES AND WETLANDS CLEAN WATER ACT SECTIONS 401 AND 404

USACE Permit required for filling, dredging, excavating or other work in any water bodies, rivers, creeks, streams, wetlands or wet areas.

The Contractor must adhere to all of the terms and conditions associated with the following permit(s):

☒ No Permit Required

☐ Nationwide Permit 14 - PCN not Required (less than 1/10th acre waters or wetlands affected)

☐ Nationwide Permit 14 - PCN Required (1/10 to <1/2 acre, 1/3 in tidal waters)

☐ Individual 404 Permit Required

☐ Other Nationwide Permit Required: NWP# _____

Required Actions: List waters of the US permit applies to, location in project and check Best Management Practices planned to control erosion, sedimentation and post-project TSS.

1. N/A

2.

3.

4.

The elevation of the ordinary high water marks of any areas requiring work to be performed in the waters of the US requiring the use of a nationwide permit can be found on the Bridge Layouts.

Best Management Practices:

Erosion	Sedimentation	Post-Construction TSS
☐ Temporary Vegetation	☒ Silt Fence	☐ Vegetative Filter Strips
☐ Blankets/Matting	☒ Rock Berm	☐ Retention/Irrigation Systems
☐ Mulch	☐ Triangular Filter Dike	☐ Extended Detention Basin
☒ Sodding	☐ Sand Bag Berm	☐ Constructed Wetlands
☐ Interceptor Swale	☐ Straw Bale Dike	☐ Wet Basin
☐ Diversion Dike	☐ Brush Berms	☐ Erosion Control Compost
☐ Erosion Control Compost	☐ Erosion Control Compost	☐ Mulch Filter Berm and Socks
☐ Mulch Filter Berm and Socks	☐ Mulch Filter Berm and Socks	☐ Compost Filter Berm and Socks
☐ Compost Filter Berm and Socks	☐ Compost Filter Berm and Socks	☒ Vegetation Lined Ditches
	☐ Stone Outlet Sediment Traps	☐ Sand Filter Systems
	☐ Sediment Basins	☐ Grassy Swales

III. CULTURAL RESOURCES

Refer to TxDOT Standard Specifications in the event historical issues or archeological artifacts are found during construction. Upon discovery of archeological artifacts (bones, burnt rock, flint, pottery, etc.) cease work in the immediate area and contact the Engineer immediately.

☒ No Action Required ☐ Required Action

Action No.

1.

2.

3.

4.

IV. VEGETATION RESOURCES

Preserve native vegetation to the extent practical.
Contractor must adhere to Construction Specification Requirements Specs 162, 164, 192, 193, 506, 730, 751, 752 in order to comply with requirements for invasive species, beneficial landscaping, and tree/brush removal commitments.

☒ No Action Required ☐ Required Action

Action No.

1.

2.

3.

4.

V. FEDERAL LISTED, PROPOSED THREATENED, ENDANGERED SPECIES, CRITICAL HABITAT, STATE LISTED SPECIES, CANDIDATE SPECIES AND MIGRATORY BIRDS.

☒ No Action Required ☐ Required Action

Action No.

1.

2.

3.

4.

If any of the listed species are observed, cease work in the immediate area, do not disturb species or habitat and contact the Engineer immediately. The work may not remove active nests from bridges and other structures during nesting season of the birds associated with the nests. If caves or sinkholes are discovered, cease work in the immediate area, and contact the Engineer immediately.

LIST OF ABBREVIATIONS

BMP:	Best Management Practice	SPCC:	Spill Prevention Control and Countermeasure
CGP:	Construction General Permit	SW3P:	Storm Water Pollution Prevention Plan
DSHS:	Texas Department of State Health Services	PCN:	Pre-Construction Notification
FHWA:	Federal Highway Administration	PSL:	Project Specific Location
MOA:	Memorandum of Agreement	TCEQ:	Texas Commission on Environmental Quality
MOU:	Memorandum of Understanding	TPDES:	Texas Pollutant Discharge Elimination System
MS4:	Municipal Separate Stormwater Sewer System	TPWD:	Texas Parks and Wildlife Department
MBTA:	Migratory Bird Treaty Act	TxDOT:	Texas Department of Transportation
NOT:	Notice of Termination	T&E:	Threatened and Endangered Species
NWP:	Nationwide Permit	USACE:	U.S. Army Corps of Engineers
NOI:	Notice of Intent	USFWS:	U.S. Fish and Wildlife Service

VI. HAZARDOUS MATERIALS OR CONTAMINATION ISSUES

General (applies to all projects):

Comply with the Hazard Communication Act (the Act) for personnel who will be working with hazardous materials by conducting safety meetings prior to beginning construction and making workers aware of potential hazards in the workplace. Ensure that all workers are provided with personal protective equipment appropriate for any hazardous materials used.

Obtain and keep on-site Material Safety Data Sheets (MSDS) for all hazardous products used on the project, which may include, but are not limited to the following categories: Paints, acids, solvents, asphalt products, chemical additives, fuels and concrete curing compounds or additives. Provide protected storage, off bare ground and covered, for products which may be hazardous. Maintain product labelling as required by the Act.

Maintain an adequate supply of on-site spill response materials, as indicated in the MSDS. In the event of a spill, take actions to mitigate the spill as indicated in the MSDS, in accordance with safe work practices, and contact the District Spill Coordinator immediately. The Contractor shall be responsible for the proper containment and cleanup of all product spills.

Contact the Engineer if any of the following are detected:
* Dead or distressed vegetation (not identified as normal)
* Trash piles, drums, canister, barrels, etc.
* Undesirable smells or odors
* Evidence of leaching or seepage of substances

Does the project involve any bridge class structure rehabilitation or replacements (bridge class structures not including box culverts)?

☐ Yes ☒ No

If "No", then no further action is required.
If "Yes", then TxDOT is responsible for completing asbestos assessment/inspection.

Are the results of the asbestos inspection positive (is asbestos present)?

☐ Yes ☒ No

If "Yes", then TxDOT must retain a DSHS licensed asbestos consultant to assist with the notification, develop abatement/mitigation procedures, and perform management activities as necessary. The notification form to DSHS must be postmarked at least 15 working days prior to scheduled demolition.

If "No", then TxDOT is still required to notify DSHS 15 working days prior to any scheduled demolition.

In either case, the Contractor is responsible for providing the date(s) for abatement activities and/or demolition with careful coordination between the Engineer and asbestos consultant in order to minimize construction delays and subsequent claims.

Any other evidence indicating possible hazardous materials or contamination discovered on site. Hazardous Materials or Contamination Issues Specific to this Project:

☒ No Action Required ☐ Required Action

Action No.

1.

2.

3.

VII. OTHER ENVIRONMENTAL ISSUES

(includes regional issues such as Edwards Aquifer District, etc.)

☒ No Action Required ☐ Required Action

Action No.

1.

2.

3.

Texas Department of Transportation — Design Division Standard

ENVIRONMENTAL PERMITS, ISSUES AND COMMITMENTS

EPIC

FILE: epic.dgn	DN: TxDOT	CK: RG	DW: VP	CK: AR
©TxDOT: February 2015	CONT	SECT	JOB	HIGHWAY
REVISIONS 12-12-2011 (DS) 05-07-14 ADDED NOTE SECTION IV. 01-23-2015 SECTION I (CHANGED ITEM 1122 TO ITEM 506, ADDED GRASSY SWALES.	DIST	COUNTY		SHEET NO.
		WILLIAMSON		66

PROJECT CONSTRUCTION SUMMARY

PROJECT NAME: T13-2024 Traffic Signals

FINAL ACCEPTANCE DATE: _____

INSPECTOR: Todd Meaker

CONTRACTOR: Elecnor Belco Electric, Inc.

Maintained By:	
COH	Other
X	
Boxes checked by COH	

CONSTRUCTION COSTS

STREET IMPROVEMENT COST: $405,565.21

SIDEWALK IMPROVEMENT COST: $0

SIDEWALK RAMP IMPROVEMENT COST: $0

BRIDGE IMPROVEMENT COST: $0

POND(S) COST: $0

DRAINAGE IMPROVEMENT COST: $0

WATER IMPROVEMENT COST: $0

WASTEWATER IMPROVEMENT COST: $0

RESTORATION COST: $0

TOTAL IMPROVEMENT COST: $405,565.21

PREPARED BY (DESIGN ENGINEER): JMT

CHECKED BY (CITY INSPECTOR): Todd Meaker

CONSTRUCTION SUMMARY FOR STREETS & SIDEWALKS

STREET PAVING							
STREET NAME	Address from	Address to	Pavement Design (Thickness) Asphalt / Base	Pavement Width (FT) (foc-foc)	L (FT)	PRIVATE	ETJ

SIDEWALKS / SIDEWALK RAMPS						
STREET NAME	Address from	Address to	W (FT)	L (FT)	SIDES [1]	CURB RAMP [2]

1 – Designates location of existing sidewalk (E, W, S, N, SE, SW, NE, NW of designated street)
2 – Number of Ramps

CONSTRUCTION SUMMARY FOR BRIDGES

BRIDGES / BRIDGE CLASS CULVERTS / DRAINAGE CULVERTS ACROSS ROW								
STREET NAME AND ADDRESS OR LOCATION	FEATURE CROSSED [1]	TYPE [2]	DESCRIPTION [3]	DECK		COST	PRIVATE	ETJ
				W (FT) [4]	L (FT) [5]			

1 – Feature Crossed: Creek name if major creek or branch, or roadway name if overpass.

2 – Type: B – Bridge, C - Culvert, P – Pipe. All crossings 20’ and wider including multiple box culverts totaling 20’ or wider shall be classified as a B – Bridge. Culverts are precast of cast-in-place box culverts. Pipes are smaller drainage pipe crossings with or without headwalls.

3 – Description: i.e. 2 spans (Bridge), 2 – 5 X 7’ (Culverts), 2 – 24” RCP (Pipes).

4 – Deck Width: Use “footprint” of culvert/pipes for width on buried culvert/pipes; include full “out to out” dimension including sidewalks/railings for width of standard bridges.

5 – Deck Length: Measured along the centerline of the roadway

CONSTRUCTION SUMMARY FOR PONDS

PONDS						
POND TYPE [1]	LOCATION (ADDRESS OR LOT / BLOCK #)	SIZE (SY) [2]	DRAINAGE AREA (ACRES)	PRIVATE [3]	ETJ	COST

1 – BD = Bio–Detention
D = Detention Only
DSF = Detention / Sedimentation / Filtration
F = Filtration Only
S = Sedimentation Only
SF = Sedimentation / Filtration
SFI = Sedimentation / Filtration / Infiltration
SI = Sedimentation / Irrigation
WP = Wet Pond

2 – Approximate boundary area

3 – Provide copy of recorded agreement for privately maintained ponds

CONSTRUCTION SUMMARY FOR DRAINAGE

STORM DRAIN			MANHOLES			INLETS		
SIZE (IN)	MATERIAL TYPE	L (FT)	QTY	SIZE (Dia – FT)	MATERIAL TYPE	QTY	SIZE (L – FT)	TYPE [1]

JUNCTION BOXES			OUTFALL STRUCTURES		
QTY	SIZE (FT x FT x FT)	MATERIAL TYPE [2]	QTY	SIZE [3]	DESCRIPTION [4]

CHANNEL			
LENGTH (FT)	BOTTOM WIDTH (FT)	SIDE SLOPE (FT/FT)	LINING MATERIAL TYPE
NONE			

1) Grate, Area, Curb, Recessed Curb, Combination, Slotted Drain
2) Cast-in-Place, Precast
3) Pipe size / Culvert Size
4) Headwall, Wing Walls, Gabions

CONSTRUCTION SUMMARY FOR WATER

VALVES INSTALLED			PIPE			FIRE HYDRANTS		
SIZE	DESCRIPTION	NO.	SIZE	TYPE	LENGTH	SIZE	TYPE	NO.

AIR RELEASE		
SIZE	TYPE	NO.

SERVICES INSTALLED	
NO.	TYPE

REMARKS:

CONSTRUCTION SUMMARY FOR WASTEWATER

PIPE			MANHOLES					
SIZE	TYPE	LENGTH	DEPTH	MAKE	STA. NO.	B.C.	EYE	STREET
SERVICES INSTALLED								
NO.	**TYPE – S / D**		**T8YPE OF MANHOLE COATING:**					

REMARKS:

LIMITS OF CONSTRUCTION FOR WATER/WASTEWATER PROJECTS ONLY

PROJECT NAME _____ WORK ORDER #_____

W/WW JOB I.D. _____ SUBDIVISION FILE # _____

LIMITS OF PROJECT WILL BE GIVEN BY ADDRESS OF STREETS LISTED BELOW

STREET NAME	FROM	TO

THIS SHEET MUST BE USED WHEN THERE IS NOT A STREET AND DRAINAGE SUMMARY INCLUDED.

Innovation at Limmer Loop - Traffic Signal

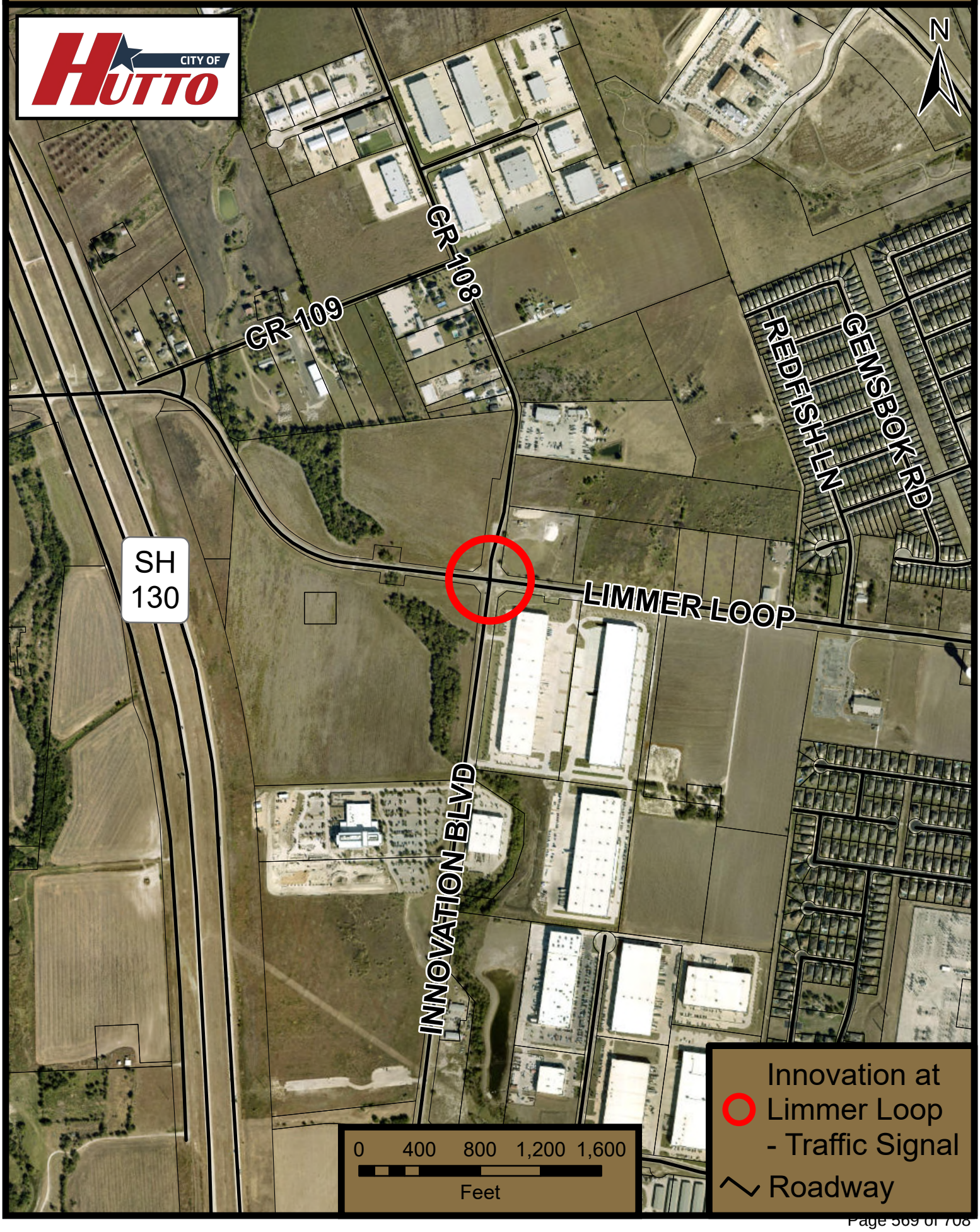

Punch List Walk

04/16/2026 / Todd Meaker

Complete

Score	3 / 9 (33.33%)	**Flagged items**	0	**Actions**	0

Conducted on	04/16/2026 8:05 AM CDT
Prepared by	Todd Meaker

Inspection	3 / 9 (33.33%)
Location of Project	County Road 164 Hutto TX 78634 United States (30.55870487065127, -97.57084759855276)
Name of project	Inovation and Limmer Loop Traffic signal
Who Is The Contractor	Elecnor Belco
Date and time	04/16/2026 8:08 AM CDT
Day	Thursday

Items Needing Correction

1. Install End caps on the mast arms and install pole caps.
2. Covers over the hand holes on the poles
3. Dress up area and clean trash.
4. Fill dirt around boxes and sidewalk.
5. Remove erosion controls.
6. Provide locks for control panels.
7.Provide keys for control panels
8. Fill hole around control panels and dress up both sides of the sidewalk.
8. Fill around the base of the southwest pole.
9. Pull mule tape and seal ducts
10. Remove excess wire from ground boxes.
11. Install in bells within the controller cabinet as required and clean and vacuum the interior of the controller cabinet.
12. Remove all trash and debris from the job site.
13. Backfill and compact soil around all ground boxes to finish grade.

Walk Through Photos.

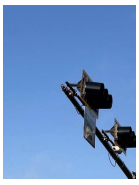
Photo 1

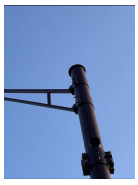
Photo 2


Photo 3


Photo 4


Photo 5


Photo 6


Photo 7


Photo 8


Photo 9


Photo 10

Contractor Signature

Items corrected	2 / 2 (100%)
Date and Time	05/14/2026 3:33 PM CDT

Day	Thursday
Are all items corrected	Yes

Photos of corrected Items.


Photo 11


Photo 12


Photo 13


Photo 14


Photo 15


Photo 16


Photo 17


Photo 18

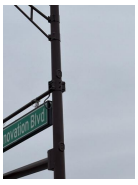

Photo 19

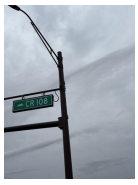

Photo 20

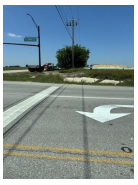
Photo 21

Media summary



Photo 1



Photo 2



Photo 3



Photo 4



Photo 5



Photo 6



Photo 7



Photo 8



Photo 9

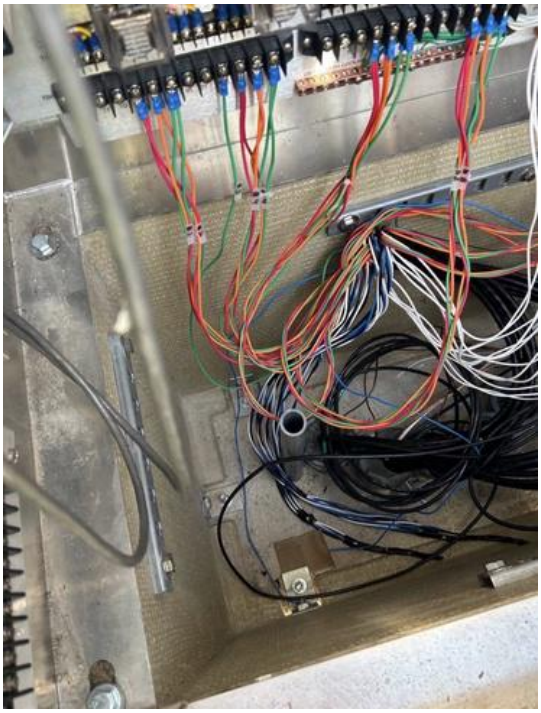

Photo 10



Photo 11



Photo 12



Photo 13



Photo 14



Photo 15



Photo 16



Photo 17

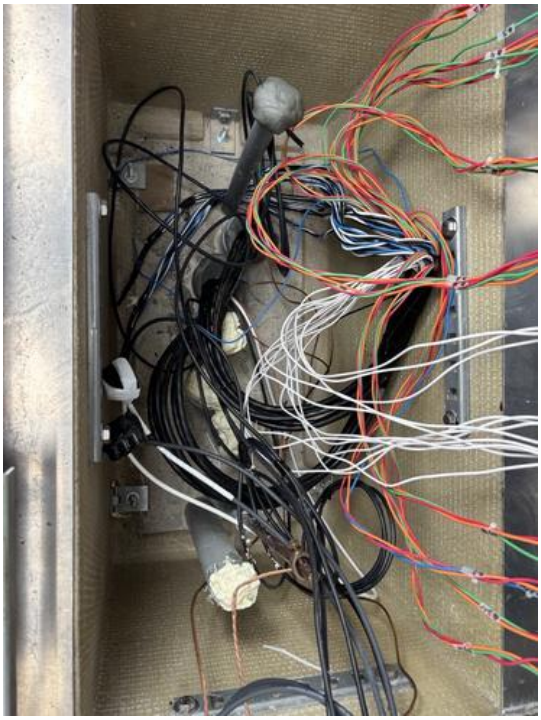

Photo 18



Photo 19



Photo 20



Photo 21

801 E. Old Settlers Blvd, Suite 102
Round Rock, TX 78664
Phone: 512-864-2833

ENGINEER'S CONCURRENCE FOR PROJECT ACCEPTANCE

Project: T13-2024 – Traffic Signal at Limmer Loop and Innovation Boulevard

Scope of Work: Installation of Traffic Signal

Owner's Name and Address
The City of Hutto
500 W Live Oak Street
Hutto, Tx 78634
Phone: 512-759-4015

Consultant Engineer's Name and Address
Johnson, Mirmiran & Thompson, Inc.
801 E. Old Settlers Blvd., Suite 102
Round Rock, Tx 78664
Phone: 512-864-2833

On or prior to this date, I, the undersigned professional engineer, or my representative, made a final visual inspection of the referenced project site. This concurrence is solely for the improvements associated with the T13-2024 Traffic Signal Project. I, or my representative, have also visited the site during construction and observed that the site improvements were constructed per the approved plans, with insignificant deviation. Deviations are marked and provided with the As-Built plan set dated 6/26/2026. I, therefore, verify the adequate completion of the following items:

Construction of traffic signal at the intersection of Limmer Loop and Innovation Blvd/CR 108.

_____ Date: 6/26/2026

Elliot Cude, P.E.
Deputy Project Manager
Johnson, Mirmiran & Thompson, Inc. TBPE Reg. No.
Kennedy Consulting, Inc. TBPE FIRM REG. NO. F-16341

Project Name: City of Hutto - #23-005E-002 - Traffic Signal at Limmer Loop (CR 164) and Innovation Blvd (CR 108)

FINAL COST AND QUANTITIES

DRAINAGE IMPROVEMENTS					COST
ITEM	DESCRIPTION	QTY.	UNIT	UNIT PRICE	AMOUNT
1					
2					
				Total	$0.00

WATER IMPROVEMENTS					COST
ITEM	DESCRIPTION	QTY.	UNIT	UNIT PRICE	AMOUNT
1					
2					
				Total	$0.00

WASTEWATER IMPROVEMENTS					COST
ITEM	DESCRIPTION	QTY.	UNIT	UNIT PRICE	AMOUNT
1					
2					
				Total	$0.00

EROSION IMPROVEMENTS					COST
ITEM	DESCRIPTION	QTY.	UNIT	UNIT PRICE	AMOUNT
1	SILT FENCE	221	LF	$ 5.00	$1,105.00
2	ROCK BERM	27	LF	$ 40.00	$1,080.00
3	CONCRETE WASHOUT	36	SF	$ 80.00	$2,880.00
				Total	$5,065.00

TRAFFIC SIGNAL IMPROVEMENTS					COST
ITEM	DESCRIPTION	QTY.	UNIT	UNIT PRICE	AMOUNT
1	DRILL SHAFT (TRF SIG POLE) (36IN)	56	LF	$ 390.00	$21,840.00
2	CONDT (PVC) (SCH 40) (2")	123	LF	$ 30.00	$3,690.00
3	CONDT (PVC) (SCH 40) (2") (BORE)	13	LF	$ 100.00	$1,300.00
4	CONDT (PVC) (SCH 40) (3")	768	LF	$ 25.00	$19,200.00
5	CONDT (PVC) (SCH 40) (3") (BORE)	555	LF	$ 40.00	$22,200.00
6	ELEC CONDR (NO.8) BARE	744	LF	$ 2.00	$1,488.00
7	ELEC CONDR (NO.8) INSULATED	864	LF	$ 2.00	$1,728.00
8	ELEC CONDR (NO.6) INSULATED	22	LF	$ 2.50	$55.00
9	GROUND BOX TY A (122311)W/APRON	4	EA	$ 1,562.00	$6,248.00
10	GROUND BOX TY D (162922)W/APRON	1	EA	$ 1,705.00	$1,705.00
11	ELC SRV TY D 120/240 070(NS)AL(E)EX(O)	1	EA	$ 7,000.00	$7,000.00
12	INSTALL HWY TRF SIG (ISOLATED)	1	EA	$ 35,000.00	$35,000.00
13	VEH SIG SEC (12")LED(GRN)	8	EA	$ 310.00	$2,480.00
14	VEH SIG SEC (12")LED(GRN ARW)	1	EA	$ 310.00	$310.00
15	VEH SIG SEC (12")LED(YEL)	8	EA	$ 310.00	$2,480.00
16	VEH SIG SEC (12")LED(YEL ARW)	8	EA	$ 310.00	$2,480.00
17	VEH SIG SEC (12")LED(RED)	8	EA	$ 310.00	$2,480.00
18	VEH SIG SEC (12")LED(RED ARW)	4	EA	$ 310.00	$1,240.00
19	BACKPLATE W/REFL BRDR(4 SEC)	1	EA	$ 481.00	$481.00
20	BACKPLATE W/REFL BRDR(3 SEC)	11	EA	$ 300.00	$3,300.00

Project Name: City of Hutto - #23-005E-002 - Traffic Signal at Limmer Loop (CR 164) and Innovation Blvd (CR 108)

FINAL COST AND QUANTITIES

21	TRF SIG CBL (TY A)(14 AWG)(7 CONDR)	3,045	LF	$ 4.40	$13,398.00
22	TRF SIG PL AM(S)1ARM(36')LUM&ILSN	1	EA	$ 18,725.00	$18,725.00
23	TRF SIG PL AM(S)1ARM(44')LUM&ILSN	1	EA	$ 20,177.00	$20,177.00
24	TRF SIG PL AM(S)1ARM(48')LUM&ILSN	2	EA	$ 21,204.00	$42,408.00
25	BBU SYSTEM (EXTERNAL BATT CABINET)	1	EA	$ 11,300.00	$11,300.00
26	RVDS(PRESENCE AND ADVANCE DET)	4	EA	$ 9,328.00	$37,312.00
				Total	$280,025.00

STREETS IMPROVEMENTS					**COST**
ITEM	**DESCRIPTION**	**QTY.**	**UNIT**	**UNIT PRICE**	**AMOUNT**
1	BARRICADES, SIGNS AND TRAFFIC HANDLING	3	MO	$ 3,000.00	$9,000.00
2	SITE CLEARING	1	EA	$ 2,500.00	$2,500.00
3	MOBILIZATION	1	LS	$ 60,000.00	$60,000.00
4	ALUMINUM SIGNS (TY A)	117	SF	$ 34.00	$3,978.00
5	IN SM RD SN SUP&AM TYTWT(1)WS(T)	4	EA	$ 398.00	$1,592.00
6	REMOVE SM RD SN SUP&AM	2	EA	$ 115.00	$230.00
7	REFL PAV MRK TY I (W)8"(SLD)(100MIL)	66	LF	$ 3.00	$198.00
8	REFL PAV MRK TY I (W)24"(SLD)(100MIL)	100	LF	$ 14.00	$1,400.00
9	REFL PAV MRK TY I (W)(ARROW)(100MIL)	1	EA	$ 228.00	$228.00
10	REFL PAV MRK TY I (W)(WORD)(100MIL)	1	EA	$ 285.00	$285.00
11	RE PM W/RET REQ TY I (Y) 6" (SLD)(100MIL)	118	LF	$ 3.00	$354.00
12	REFL PAV MRKR TY I-C	4	EA	$ 9.00	$36.00
13	REFL PAV MRKR TY II-A-A	14	EA	$ 9.00	$126.00
14	ELIM EXT PAV MRK & MRKS (6")	624	LF	$ 1.50	$936.00
15	ELIM EXT PAV MRK & MRKS (8")	71	LF	$ 3.00	$213.00
16	ELIM EXT PAV MRK & MRKS (12")	24	LF	$ 3.50	$84.00
17	ELIM EXT PAV MRK & MRKS (24")	136	LF	$ 7.00	$952.00
18	PORTABLE CHANGEABLE MESSAGE SIGN	28	DAY	$ 195.00	$5,460.00
				Total	$87,572.00

SIDEWALK AND RAMP IMPROVEMENTS					**COST**
ITEM	**DESCRIPTION**	**QTY.**	**UNIT**	**UNIT PRICE**	**AMOUNT**
1					
				Total	**$0.00**

TOTAL CONSTRUCTION COSTS		
ITEM	**DESCRIPTION**	**COST AMOUNT**
1	DRAINAGE IMPROVEMENTS	$0.00
2	WATER IMPROVEMENTS	$0.00
3	WASTEWATER IMPROVEMENTS	$0.00
4	EROSION IMPROVENTS	$5,065.00
5	TRAFFIC SIGNAL IMPROVENTS	$280,025.00
6	STREET IMPROVEMENTS	$87,572.00
7	SIDEWALK AND RAMP IMPROVEMENTS	$0.00
8	CHANGE ORDERS	$32,903.21
	Grand Total	$405,565.21

(Company Staff Approval Signature)

AGENDA ITEM REPORT
10.6.

To:	City Council
Subject:	Consideration and possible action on Resolution No. R-2026-179 accepting the infrastructure improvements for the Hutto Veterans Memorial, Capital Improvement Project (CIP-P06-2024) as public infrastructure. (Kate Moriarty)
Meeting:	Thursday, September 3, 2026
Department:	Engineering /
Staff Contact:	Kate Moriarty

ITEM SUMMARY:

The Hutto Veterans Memorial project has successfully completed construction for the Capital project.

The purpose of this agenda item serves as a formal request from the City of Hutto Engineering staff that the construction work for the Hutto Veterans Memorial project has been successfully completed. The project has been constructed in substantial conformance with the approved plans and specifications prepared by Millis Development and Construction.
All outstanding final completion punch list items have been fully addressed.

Approved by Construction Inspection and Engineering through resolution of inspected punch list items.

STAFF RECOMMENDATION:

Staff has reviewed, approved and recommended acceptance of this private development project.

FISCAL NOTES:

There is no fiscal impact associated with this agenda item. Funding for this project was included in the Capital Improvement Budget with funding sources from bond issuance and operating funds.

ATTACHMENTS:

1. 2026.8.27_DRAFTVeteransMemorialRes (JE)
2. Veterans_Memorial Map of Area (2)
3. Veterans Memorial-2
4. Veterans Memorial-1
5. Veterans_Memorial
6. Affidavit-of-Bills-Paid Signed
7. CIP P6-2024_VM_ENGR Ltr_6.10.2026
8. CIP P6-2024_VM_ENGR Ltr_6.10.2026
9. CIP P6-2024_VM_WILCO_Reimbursement_6.9.2026
10. Final CIP Checklist 1

11. Final Pay Application 7 Retainage
12. Punch list

RESOLUTION NO. R-2026-XXX

A RESOLUTION OF THE CITY OF HUTTO, TEXAS, APPROVING THE INFRASTRUCTURE IMPROVEMENTS FOR THE PROJECT KNOWN AS HUTTO VETERANS MEMORIAL IN THE CITY OF HUTTO, WILLIAMSON COUNTY; PROVIDING PROPER NOTICE AND MEETING, AND PROVIDING AN EFFECTIVE DATE.

WHEREAS, the public infrastructure improvements for the Hutto Veterans Memorial project have been constructed and are ready for acceptance; and

WHEREAS, a final inspection was conducted by the City Construction Inspection and Public Works staff on all sidewalks, ramps, and aesthetic improvements..

NOW, THEREFORE, BE IT RESOLVED BY THE CITY COUNCIL OF THE CITY OF HUTTO, TEXAS, THAT:

SECTION 1: The findings set forth in the recitals of this Resolution are hereby found to be true and correct and are hereby adopted as findings of the City Council and are incorporated into the body of this Resolution as if fully set forth herein.

SECTION 2: That the Hutto City Council hereby approves and authorizes the City Manager to accept the infrastructure and enter into a two-year maintenance period.

SECTION 3: The City Council hereby finds and declares that written notice of the date, hour, place and subject of the meeting at which this Resolution was adopted was posted and that such meeting was open to the public as required by law at all times during which this Resolution and the subject matter hereof were discussed, considered and formally acted upon, all as required by the Open Meetings Act, Chapter 551, Texas Government Code, as amended.

SECTION 4: This Resolution shall take effect immediately upon its passage.

PASSED & APPROVED by the CITY COUNCIL of the CITY OF HUTTO, on the 3rd day of September 2026 on vote of __AYES; ___NAYS; __ABSTENTIONS

CITY OF HUTTO, TEXAS

_____

Mike Snyder, Mayor

ATTEST:

_____

Laura Hallmark, City Secretary

Veterans Memorial

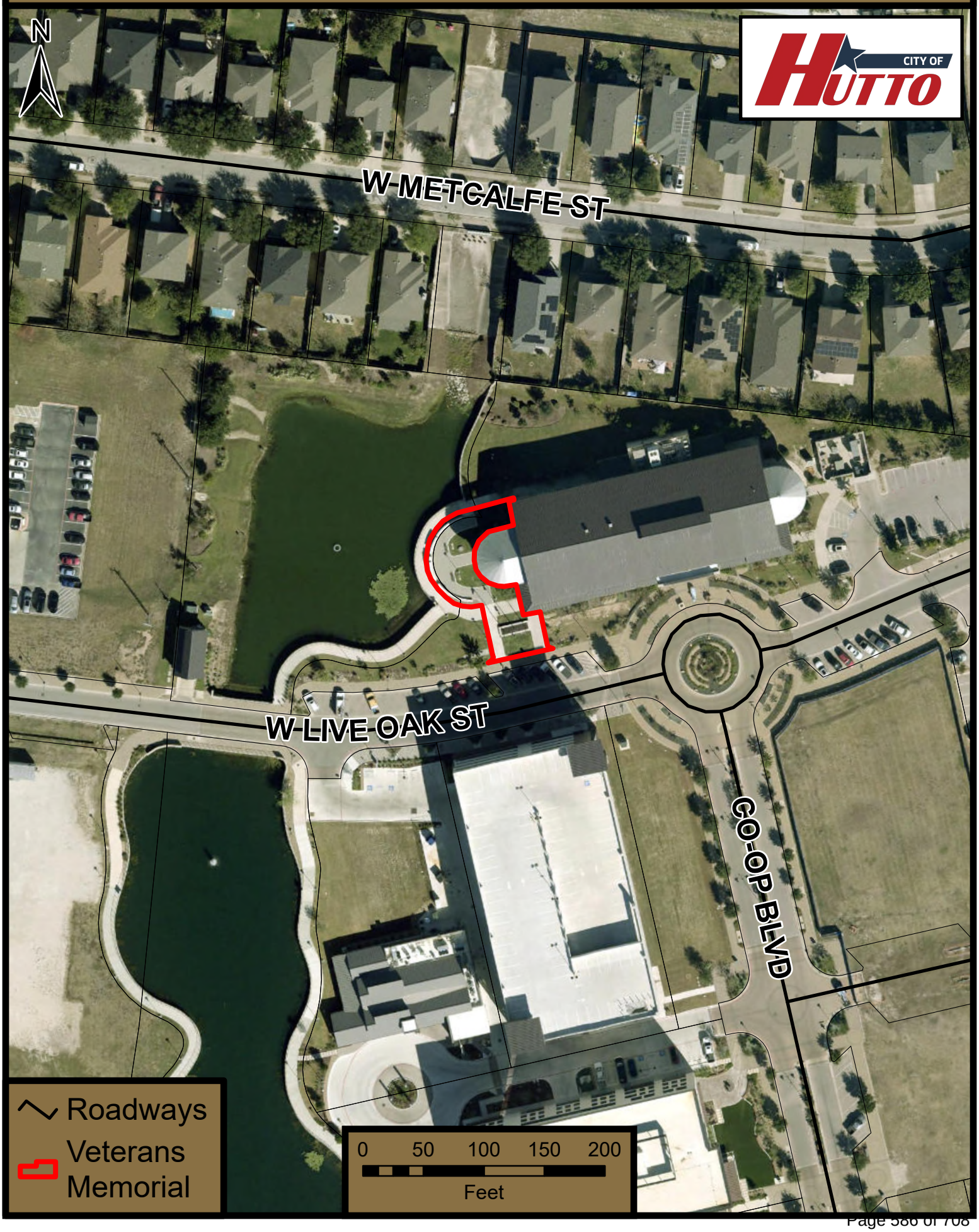


HUTTO VETERANS MEMORIAL


HUTTO VETERANS MEMORIAL

Veterans Memorial

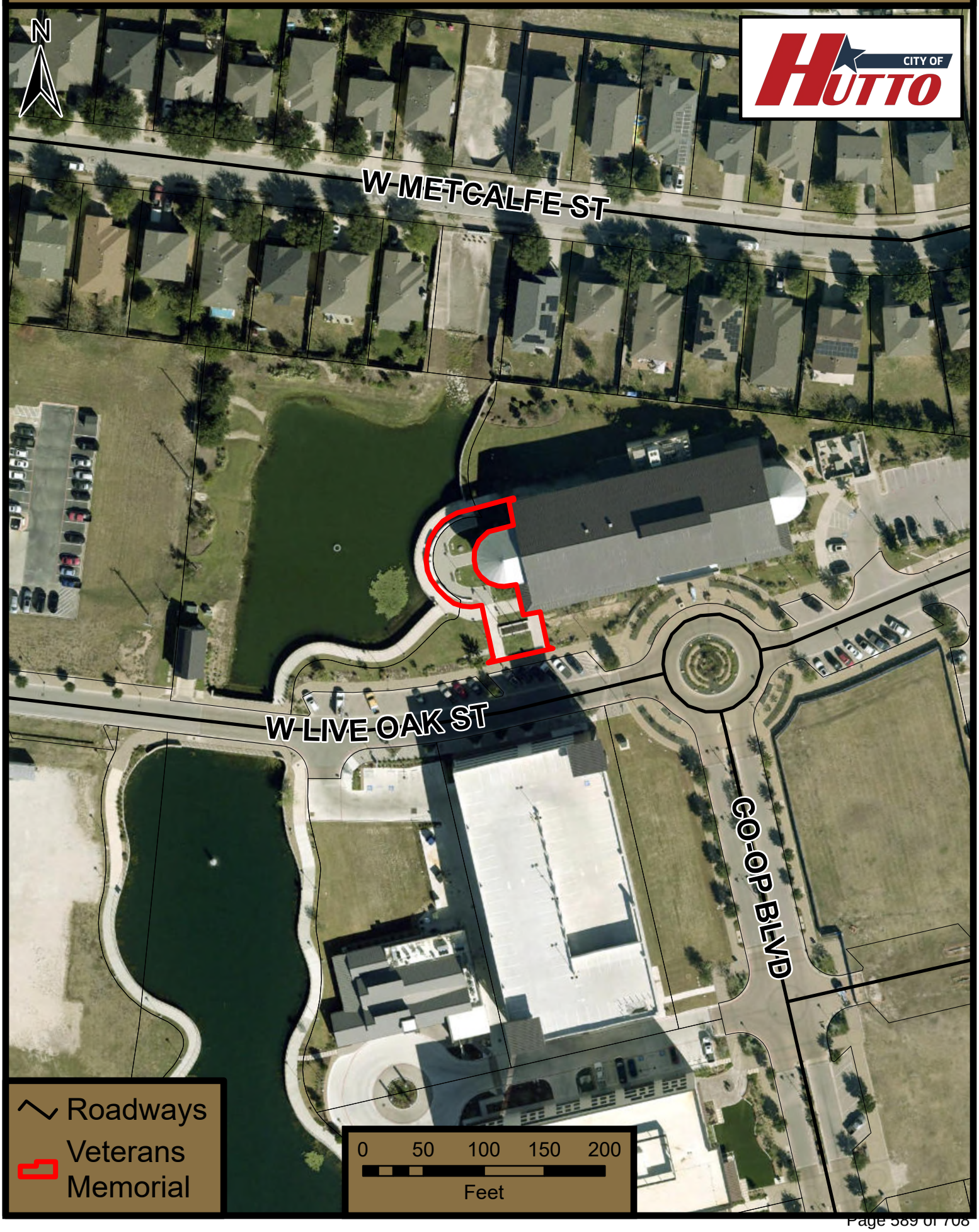

FINAL BILLS PAID AFFIDAVIT
BY CONTRACTOR

BEFORE ME, the undersigned authority, personally appeared as Millis Development and Construction - Austin, LLC (Name), known to me to be a credible person, and after being by me duly sworn, upon oath stated and affirmed that: "My name is James Griffiths (Name) and I am the Sr. Project Manager (Title) of Millis Development & Construction-Austin, LLC. (Firm)", hereafter referred to in this affidavit as "Contractor". Contractor's business address is 931 Pheasant Valley Drive, Suite 200, Missouri City, (Address) Texas, 77489 (Zip). The undersigned Contractor has personal knowledge of the facts stated herein and has full authority to make the agreements in this affidavit on behalf of Contractor.

Pursuant to and in accordance with a written contract between Contractor and The City of Hutto (Owner), collectively referred to as Owner, Contractor furnished materials and labor for the construction, renovation, installation or repair of certain improvements (the "Improvements") as indicated in City of Hutto Permit No. N/A (Permit Number).

All work provided for under said written construction contract, together with all changes and supplements thereto, has been fully completed in accordance with the terms and provisions of said contract.

Contractor has paid each of its subcontractors, laborers, suppliers and materialmen in full for all labor and materials provided to Contractor for or in connection with the construction, renovation, or repair of the Improvements.

Contractor is not aware of any unpaid bills, claims, demands, or causes of action by any of its subcontractors, laborers, manufacturers, suppliers, or materialmen for or in connection with the furnishing of labor materials, or both, for the construction, renovation, or repair of the Improvements.

Contractor further understands that this Final Bills Paid Affidavit is being given pursuant to and in accordance with Section 53.085 of the Texas Property Code and that the

intentional, knowing, or reckless making of a false or misleading statement in this Affidavit constitutes an offense under said Section and is a Class A misdemeanor.

Contractor hereby indemnifies and holds harmless the City of Hutto from any and all claims, demands or causes of action, and any costs, expenses, and attorney's fees incurred in connection therewith, arising from or connected with, the statements and representations contained herein.

EXECUTED this 18th day of June, 20 26.

CONTRACTOR:

By: _____

Name: James Griffiths

Title: Sr. Project Manager

Notary's Acknowledgement

Before me, the undersigned authority, on this day personally appeared James Griffiths, who first being duly sworn by me to be the person whose name is subscribed to the foregoing Final Bills Paid Affidavit, acknowledged that he/she has the authority to make this Final Bills Paid Affidavit, and further acknowledged to me that he/she executed the same for the purpose and consideration therein expressed.

GIVEN UNDER MY HAND AND SEAL OF OFFICE on this the 18th day of June, 2026.

_____

LAUREN P MCDANIEL NOTARY PUBLIC STATE OF TEXAS ID: 135512774 EXP: 04-24-2029

Mayor
Mike Snyder

Mayor Pro Tem
Dan Thornton, Place 2

Council Members
Charles Warner, Place 1
Dan Thornton, Place 2
Jim Morris, Place 3
Corina Zepeda, Place 4
Evan Porterfield, Place 5
Aaron King, Place 6

City Manager
James Earp

June 12, 2026

Subject: Engineer's Concurrence Regarding Construction Compliance
Project: Veterans Memorial Project
Project No.: CIP P06-2024
Location: City of Hutto City Hall
Owner: City of Hutto
Contractor: Millis Development & Construction – Austin LLC.

To Whom It May Concern:

The City of Hutto has reviewed the available construction documentation for the above-referenced project, including approved construction plans, submitted materials testing reports, as-built information provided by the contractor, and site observations performed by City staff.

Please note that the original design consultant did not provide construction-phase engineering services, did not observe construction, and did not provide a final certification of completion. As a result, the City's concurrence is based solely on the information made available to the City and on limited field verification performed by City engineering and inspection staff.

Based on this review, the City Engineer provides the following statement:

The City of Hutto concurs that, **to the best of the City's knowledge and based on the documentation available**, the constructed improvements appear to generally conform to the approved construction plans and applicable City of Hutto specifications. This concurrence is provided for purposes of project closeout and internal recordkeeping only.

This concurrence **does not** constitute:

- A certification or guarantee of construction quality;
- A verification of complete compliance with all codes, standards, or specifications;
- A substitute for a licensed architect's record-of-construction services;
- Acceptance of liability for errors, omissions, or deficiencies in the design or construction of the project.

Final acceptance of the improvements remains subject to completion of all required punch-list items, submittal of record drawings meeting City standards, confirmation of all required testing, and fulfillment of any outstanding development or permit conditions.

If you have questions regarding this concurrence or require additional documentation, please contact the Engineering Department at (512) 759-4933 or Roxanne.Spencer@huttotx.gov.



Respectfully Submitted,
Patricia A. Davis, MSCE, P.E., LGPP, NSPE
Interim City Engineer
City of Hutto

CC: James R. Earp, City Manager
Alberta Barrett, Finance Director
Jeff White, Parks Director
Todd Meaker, Construction Supervisor

Mayor
Mike Snyder

Mayor Pro Tem
Dan Thornton, Place 2

Council Members
Charles Warner, Place 1
Dan Thornton, Place 2
Jim Morris, Place 3
Corina Zepeda, Place 4
Evan Porterfield, Place 5
Aaron King, Place 6

City Manager
James Earp

June 12, 2026

Subject: Engineer's Concurrence Regarding Construction Compliance
Project: Veterans Memorial Project
Project No.: CIP P06-2024
Location: City of Hutto City Hall
Owner: City of Hutto
Contractor: Millis Development & Construction – Austin LLC.

To Whom It May Concern:

The City of Hutto has reviewed the available construction documentation for the above-referenced project, including approved construction plans, submitted materials testing reports, as-built information provided by the contractor, and site observations performed by City staff.

Please note that the original design consultant did not provide construction-phase engineering services, did not observe construction, and did not provide a final certification of completion. As a result, the City's concurrence is based solely on the information made available to the City and on limited field verification performed by City engineering and inspection staff.

Based on this review, the City Engineer provides the following statement:

The City of Hutto concurs that, **to the best of the City's knowledge and based on the documentation available**, the constructed improvements appear to generally conform to the approved construction plans and applicable City of Hutto specifications. This concurrence is provided for purposes of project closeout and internal recordkeeping only.

This concurrence **does not** constitute:

- A certification or guarantee of construction quality;
- A verification of complete compliance with all codes, standards, or specifications;
- A substitute for a licensed architect's record-of-construction services;
- Acceptance of liability for errors, omissions, or deficiencies in the design or construction of the project.

Final acceptance of the improvements remains subject to completion of all required punch-list items, submittal of record drawings meeting City standards, confirmation of all required testing, and fulfillment of any outstanding development or permit conditions.

If you have questions regarding this concurrence or require additional documentation, please contact the Engineering Department at (512) 759-4933 or Roxanne.Spencer@huttotx.gov.



Respectfully Submitted,
Patricia A. Davis, MSCE, P.E., LGPP, NSPE
Interim City Engineer
City of Hutto

CC: James R. Earp, City Manager
Alberta Barrett, Finance Director
Jeff White, Parks Director
Todd Meaker, Construction Supervisor

Mayor
Mike Snyder

Mayor Pro Tem
Dan Thornton, Place 2

Council Members
Charles Warner, Place 1
Dan Thornton, Place 2
Jim Morris, Place 3
Corina Zepeda, Place 4
Evan Porterfield, Place 5
Aaron King, Place 6

City Manager
James Earp

June 12, 2026

TO: Williamson County Judge and Commissioners Court
PROJECT: Veterans Memorial Project P6-2024
SUBJECT: Veterans Memorial Reimbursement

BACKGROUND

On February 4, 2026, the Williamson County Commissioners Court approved funding in the amount of $100,000 to reimburse the City of Hutto for the construction of the Veterans Memorial community recreational facility. This funding was granted under the Williamson County Community Recreational Facility Fund Policy.

PROJECT COMPLETION

The City of Hutto is pleased to report that the Veterans Memorial project has been completed. The facility serves a vital public purpose by honoring Williamson County veterans and providing a community space for reflection, commemoration, and public gatherings.

REQUEST FOR REIMBURSEMENT

In accordance with the Williamson County Community Recreational Facility Fund Policy and the approval granted on February 4, 2026, the City of Hutto respectfully requests reimbursement in the amount of $100,000 for expenses incurred in the construction of the Veterans Memorial.

SUPPORTING DOCUMENTATION

Attached to this memo, please find:

- ✓ Detailed budget and expenditure report showing use of funds (Exhibit A)
- ✓ Invoices and receipts for project expenses (Exhibit B)
- ✓ Photos of the completed Veterans Memorial (Exhibit C)

DRAFT

COMPLIANCE WITH POLICY

The City of Hutto acknowledges and confirms compliance with all terms and conditions of the Williamson County Community Recreational Facility Fund Policy, including:

- Use of funds solely for the approved community recreational facility project;
- Availability for audit and inspection of records for three (3) years following final disbursement; and
- Commitment to maintain the Veterans Memorial for public use serving the citizens of Williamson County.

PRESENTATION

Upon request from the Williamson County Commissioners Court, the City of Hutto is prepared to provide a presentation detailing the completed project, including an overview of construction, items purchased/developed, and the public purpose served by the facility.

We appreciate Williamson County's support of this important community project and look forward to the reimbursement process.

Should you require any additional information or documentation, please contact me at Patricia.Davis@huttotx.gov.

Respectfully submitted,



Patricia A. Davis, MSCE, P.E., LGPP, NSPE
Interim City Engineer

CC: James R. Earp, City Manager
Alberta Barrett, Finance Director
Jeff White, Parks Director
Encl.

FINAL CIP PROJECT CHECKLIST

Date: 5/13/26

Name of Project: Veterans Memorial

Conditional / Final Acceptance Date: _____

Inspector's Name: Todd Meaker Job Number(s): _____

Note: All spaces need to be initialed by Inspector including N/A.

N/A 1. Project Construction Summary Date Received: _____

TM 2. Engineer's Concurrence Letter Date Received: 6/10/26

N/A 3. Maintenance Bond(s) Date Received: _____

TM 4. Final Cost & Quantities signed & sealed by engineer Date Received: 5/8/26

TM 5. As-built Reproducible Plans (1-24"X36", pdf scan, ACAD Base Map files< Shape File .SHP) Date Received: 5/8/26

TM 6. TDLR report if applicable Date Received: conducted on 8/21/26 waiting on report

TM 7. Test Reports

N/A Manhole Test
N/A TV Test
N/A Bacteriological Test
N/A WW Low Air Pressure Test / Mandrel Test
N/A Valve & Hydrant Test
N/A Water Pressure Test

TM 8. Final Inspection Punch List Date Completed: _____

NO 9. Liquidated Damages (Yes or No) If yes, how much $ N/A for N/A days.

N/A 10. No. of Lots for Subdivisions_____ Total Acres in Subdivision. _____

TM 11. Affidavit of all Bills Paid Date Received: 6/18/26

N/A 12. Final Change Order Date Received: _____

Yes 13. Extended Warranty (Yes or No) If yes, how long 1 year from substantial

TM 14. Map showing Area being accepted.

Comments: _____

_____

_____

Please initial: TM Inspector, TM Supervisor, _

TO OWNER/CLIENT:
City of Hutto
500 W Live Oak Street
Hutto, Texas 78634

PROJECT:
Hutto Veterans Memorial
500 W Live Oak Street
Hutto, Texas 78634

APPLICATION NO: 7
INVOICE NO: 7
PERIOD: 12/01/25 - 12/31/25
PROJECT NO: CTX2502
CONTRACT DATE: 12/10/2024

FROM CONTRACTOR:
Millis Development and Construction - Austin
931 Pheasant Valley Rd
Missouri City, Texas 77489

VIA ARCHITECT/ENGINEER:
Sean Flannelly (MHS Planning & Design)

CONTRACT FOR: Hutto Veterans Memorial

CONTRACTOR'S APPLICATION FOR PAYMENT

Application is made for payment, as shown below, in connection with the Contract. Continuation Sheet is attached.

1.	Original Contract Sum		$556,853.06
2.	Net change by change orders		$(8,287.43)
3.	Contract Sum to date (Line 1 ± 2)		$548,565.63
4.	Total completed and stored to date (Column G on detail sheet)		$548,565.63
5.	Retainage:		
	a. 0.00% of completed work	$0.00	
	b. 0.00% of stored material	$0.00	
	Total retainage (Line 5a + 5b or total in column I of detail sheet)		$0.00
6.	Total earned less retainage (Line 4 less Line 5 Total)		$548,565.63
7.	Less previous certificates for payment (Line 6 from prior certificate)		$493,709.05
8.	Current payment due:		$54,856.58
9.	Tax applicable to this payment:		$0.00
10.	Current payment due including tax:		$54,856.58
11.	Balance to finish, including retainage (Line 3 less Line 6)		$0.00

CHANGE ORDER SUMMARY	ADDITIONS	DEDUCTIONS
Total changes approved in previous months by Owner/Client:	$0.00	$(8,287.43)
Total approved this month:	$0.00	$0.00
Totals:	$0.00	$(8,287.43)
Net change by change orders:	$(8,287.43)	

The undersigned certifies that to the best of the Contractor's knowledge, information and belief, the Work covered by this Application for Payment has been completed in accordance with the Contract Documents, that all amounts have been paid by the Contractor for Work which previous Certificates for payment were issued and payments received from the Owner/Client, and that current payments shown herein is now due.

CONTRACTOR: Millis Development and Construction - Austin

By: James Griffiths Date: 05/01/2026

State of: TX
County of: Fort Bend
Subscribed and sworn to before me this 1st day of May, 2026
Notary Public: Lauren McDaniel
My commission expires: 4/24/2029

LAUREN P MCDANIEL NOTARY PUBLIC STATE OF TEXAS ID 135512778 EXP 04-24-2029

ARCHITECT'S/ENGINEER'S CERTIFICATE FOR PAYMENT

In accordance with the Contract Documents, based on the on-site observations and the data comprising this application, the Architect/Engineer certifies to the Owner/Client that to the best of the Architect's/Engineer's knowledge, information and belief that Work is in accordance with the Contract Documents, and the Contractor is entitled to payment of the AMOUNT CERTIFIED.

AMOUNT CERTIFIED: $54,856.58

(Attach explanation if amount certified differs from the amount applied for. Initial all figures on this Application and on the Continuation Sheet that are changed to confirm the amount certified.)

ARCHITECT/ENGINEER:

By: Date:

This certificate is not negotiable. The amount certified is payable only to the Contractor named herein. Issuance, payment and acceptance of payment are without prejudice to the rights of the Owner/Client or Contractor under this Contract.

Approved For Payment:

By: **Date:**
Owner:

Approved For Payment:

By:
Engineer:

Digitally signed by Todd Meaker
DN: C=US, E=Todd.Meaker@hutto.gov, O=City of Hutto, OU=Consruction Inspection, CN=Todd Meaker
Date: 2026.05.08 13:13:07-05'00'

Document SUMMARY SHEET, APPLICATION AND CERTIFICATE FOR PAYMENT, containing
Contractor's signed Certification is attached.
Use Column I on Contracts where variable retainage for line items apply.

APPLICATION NUMBER: 7
APPLICATION DATE:
PERIOD: 12/01/25 - 12/31/25

Contract Lines

A		B	C			D		E		F	G			H	I
ITEM NO.	BUDGET CODE	DESCRIPTION OF WORK	SCHEDULED VALUE			FROM PREVIOUS APPLICATION (D + E)		THIS PERIOD		MATERIALS PRESENTLY STORED (NOT IN D OR E)	TOTAL COMPLETED AND STORED TO DATE (D + E + F)			BALANCE TO FINISH (C - G)	RETAINAGE
			QTY	UNIT PRICE	VALUE	QTY	VALUE	QTY	VALUE		QTY	VALUE	% (G / C)		
1		General Conditons	1.0	$50,602.67	$50,602.67	1.0	$50,602.67	0.0	$0.00	$0.00	1.0	$50,602.67	100.00%	$0.00	$0.00
2		Mobilization and project incidentals. Complete and in place	1.0	$27,576.06	$27,576.06	1.0	$27,576.06	0.0	$0.00	$0.00	1.0	$27,576.06	100.00%	$0.00	$0.00
3		Chain Link Temp 6ft Fence & Const. Gate (sheet DM-1). Complete and in place	1.0	$2,078.48	$2,078.48	1.0	$2,078.48	0.0	$0.00	$0.00	1.0	$2,078.48	100.00%	$0.00	$0.00
4		Site Demolition and Haul Off (DM-1) Complete and in place	1.0	$13,939.31	$13,939.31	1.0	$13,939.31	0.0	$0.00	$0.00	1.0	$13,939.31	100.00%	$0.00	$0.00
5		Erosion Control Measures, Construction Entrance and Signage-Complete and in place (Sheet EC-1)	1.0	$3,264.38	$3,264.38	1.0	$3,264.38	0.0	$0.00	$0.00	1.0	$3,264.38	100.00%	$0.00	$0.00
6		SWPPP Maintenance-Complete and in place	1.0	$2,876.66	$2,876.66	1.0	$2,876.66	0.0	$0.00	$0.00	1.0	$2,876.66	100.00%	$0.00	$0.00
7		Earthwork-Site (Sheet G-1) Complete and in place	1.0	$24,462.67	$24,462.67	1.0	$24,462.67	0.0	$0.00	$0.00	1.0	$24,462.67	100.00%	$0.00	$0.00
8		Memorial Wall-Precast Concrete Caps and Coping-Complete and in place, (Sheet MP-1,MP-2,CD-3)	1.0	$26,278.67	$26,278.67	1.0	$26,278.67	0.0	$0.00	$0.00	1.0	$26,278.67	100.00%	$0.00	$0.00
9		Memorial Wall-Brick Veneer, Precast Inserts for Main Plaque and DOD Emblem Mounting-Complete and in place. (Sheet MP-1,MP-2,CD-3)	1.0	$46,302.24	$46,302.24	1.0	$46,302.24	0.0	$0.00	$0.00	1.0	$46,302.24	100.00%	$0.00	$0.00
10		Memorial Wall Concrete Footings-Complete and in place (Sheet MP-1,MP-2,CD-3)	1.0	$3,752.17	$3,752.17	1.0	$3,752.17	0.0	$0.00	$0.00	1.0	$3,752.17	100.00%	$0.00	$0.00
11		CMU Memorial Wall Core-Complete and in	1.0	$29,348.19	$29,348.19	1.0	$29,348.19	0.0	$0.00	$0.00	1.0	$29,348.19	100.00%	$0.00	$0.00

A		B	C			D		E		F	G			H	I
ITEM NO.	BUDGET CODE	DESCRIPTION OF WORK	SCHEDULED VALUE			FROM PREVIOUS APPLICATION (D + E)		THIS PERIOD		MATERIALS PRESENTLY STORED (NOT IN D OR E)	TOTAL COMPLETED AND STORED TO DATE (D + E + F)			BALANCE TO FINISH (C - G)	RETAINAGE
			QTY	UNIT PRICE	VALUE	QTY	VALUE	QTY	VALUE		QTY	VALUE	% (G / C)		
		place (Sheet MP-1,MP-2,CD-3)													
12		Seating Wall-Precast Concrete Caps-Complete and in place (Sheet MP-1,MP-2,CD-3)	1.0	$7,716.69	$7,716.69	1.0	$7,716.69	0.0	$0.00	$0.00	1.0	$7,716.69	100.00%	$0.00	$0.00
13		Seating Wall-Brick Veneer-Complete and in place (Sheet MP-1,MP-2,CD-3)	1.0	$4,328.22	$4,328.22	1.0	$4,328.22	0.0	$0.00	$0.00	1.0	$4,328.22	100.00%	$0.00	$0.00
14		Seating Wall Concrete Footings-Complete and in place(Sheet MP-1,MP-2,CD-3)	1.0	$3,931.02	$3,931.02	1.0	$3,931.02	0.0	$0.00	$0.00	1.0	$3,931.02	100.00%	$0.00	$0.00
15		CMU Seating Wall Core-Complete and in place (Sheet MP-1, MP-2, CD-3)	1.0	$2,034.05	$2,034.05	1.0	$2,034.05	0.0	$0.00	$0.00	1.0	$2,034.05	100.00%	$0.00	$0.00
16		Pavers with Concrete Base, Belgard-Complete and in place (Sheet P-1, MP-1, CD-1/Detail 7)	1525.0	$31.59	$48,174.75	1525.0	$48,174.75	0.0	$0.00	$0.00	1525.0	$48,174.75	100.00%	$0.00	$0.00
17		4" Concrete Pavement (Sheet P-1)	2110.0	$18.76	$39,583.60	2110.0	$39,583.60	0.0	$0.00	$0.00	2110.0	$39,583.60	100.00%	$0.00	$0.00
18		Flag Pole CMU Seating Wall with stone veneer and Pre Cast Coping-Complete and in place (Sheet P-1,CD-2/1-2)	1.0	$17,493.70	$17,493.70	1.0	$17,493.70	0.0	$0.00	$0.00	1.0	$17,493.70	100.00%	$0.00	$0.00
19		Flag Pole reinstall existing equipment-Complete and in place (Sheet P-1,CD-2/2)	3.0	$11,256.51	$33,769.53	3.0	$33,769.53	0.0	$0.00	$0.00	3.0	$33,769.53	100.00%	$0.00	$0.00
20		Cast Raised Letter Bronze Memorial Letter and 2 Cast Bronze Stars on Monument Wall (Sheets MP-1-MP-3)	1.0	$37,567.77	$37,567.77	1.0	$37,567.77	0.0	$0.00	$0.00	1.0	$37,567.77	100.00%	$0.00	$0.00
21		Cast Raised Letter Aluminum Memorial Lettering on Flagpole Planter (Sheets MP-1-MP-3)	1.0	$1,413.70	$1,413.70	1.0	$1,413.70	0.0	$0.00	$0.00	1.0	$1,413.70	100.00%	$0.00	$0.00
22		Concrete Steps-Complete and in place (Sheet P-1, CD2/4-6,CD-3/1)	1.0	$3,752.17	$3,752.17	1.0	$3,752.17	0.0	$0.00	$0.00	1.0	$3,752.17	100.00%	$0.00	$0.00

A		B	C			D		E		F	G			H	I
ITEM NO.	BUDGET CODE	DESCRIPTION OF WORK	SCHEDULED VALUE			FROM PREVIOUS APPLICATION (D + E)		THIS PERIOD		MATERIALS PRESENTLY STORED (NOT IN D OR E)	TOTAL COMPLETED AND STORED TO DATE (D + E + F)			BALANCE TO FINISH (C - G)	RETAINAGE
			QTY	UNIT PRICE	VALUE	QTY	VALUE	QTY	VALUE		QTY	VALUE	% (G / C)		
23		Stair Handrails (Sheet SL-1)	1.0	$11,256.51	$11,256.51	1.0	$11,256.51	0.0	$0.00	$0.00	1.0	$11,256.51	100.00%	$0.00	$0.00
24		Sitescapes Cityview Backed Bench-CV1-1010(Sheet SL-1)	2.0	$2,579.65	$5,159.30	2.0	$5,159.30	0.0	$0.00	$0.00	2.0	$5,159.30	100.00%	$0.00	$0.00
25		Electrical Service-Complete and in place	1.0	$16,891.02	$16,891.02	1.0	$16,891.02	0.0	$0.00	$0.00	1.0	$16,891.02	100.00%	$0.00	$0.00
26		Memorial Wall Lighting Fixtures, Conductors, Conduit, Contactors, Branch Circuit Wire, Conduit and Lighting Controls Complete and in place	1.0	$63,313.71	$63,313.71	1.0	$63,313.71	0.0	$0.00	$0.00	1.0	$63,313.71	100.00%	$0.00	$0.00
27		Re-Install Existing Lighting Poles and fixtures. Complete and in place. SE-1 to SE-4	1.0	$3,827.21	$3,827.21	1.0	$3,827.21	0.0	$0.00	$0.00	1.0	$3,827.21	100.00%	$0.00	$0.00
28		Re-Install Existing Flagpole Lighting and fixtures. Complete and in place. SE-1 to SE-4	1.0	$1,313.26	$1,313.26	1.0	$1,313.26	0.0	$0.00	$0.00	1.0	$1,313.26	100.00%	$0.00	$0.00
29		13 LF of 6" HDPE and associated bends, connections, fitting. Complete and in place. (Sheet D-1)	1.0	$14,456.96	$14,456.96	1.0	$14,456.96	0.0	$0.00	$0.00	1.0	$14,456.96	100.00%	$0.00	$0.00
30		Concrete Channel Drain. Concrete Apron and %"x60" Steel Channel Grate. Complete and in place (Sheet CD-9)	2.0	$6,014.10	$12,028.20	2.0	$12,028.20	0.0	$0.00	$0.00	2.0	$12,028.20	100.00%	$0.00	$0.00
31		East Jordan Iron Works 1501 Manhole Assembly #00150125A01. Complete and in place (Sheet D-1)	1.0	$3,469.67	$3,469.67	1.0	$3,469.67	0.0	$0.00	$0.00	1.0	$3,469.67	100.00%	$0.00	$0.00
32		Site Irrigation. Complete and place with meters, backflow assemblies, misc. fittings and valves, service and operational	1.0	$3,126.81	$3,126.81	1.0	$3,126.81	0.0	$0.00	$0.00	1.0	$3,126.81	100.00%	$0.00	$0.00
33		Provide and Install all plant materials, steel edging. Landscape Bed Preparation Material, 4" Hardwood Mulch, and	1.0	$4,590.15	$4,590.15	1.0	$4,590.15	0.0	$0.00	$0.00	1.0	$4,590.15	100.00%	$0.00	$0.00

A		B	C			D		E		F	G			H	I
ITEM NO.	BUDGET CODE	DESCRIPTION OF WORK	SCHEDULED VALUE			FROM PREVIOUS APPLICATION (D + E)		THIS PERIOD		MATERIALS PRESENTLY STORED (NOT IN D OR E)	TOTAL COMPLETED AND STORED TO DATE (D + E + F)			BALANCE TO FINISH (C - G)	RETAINAGE
			QTY	UNIT PRICE	VALUE	QTY	VALUE	QTY	VALUE		QTY	VALUE	% (G / C)		
		Bed Watering and Maintenance until Established as per specifications (Sheet L1)													
34		3096 SF of Common Bermuda Grass (sod) and all Turf Watering and Maintenance until Established as per specifications (Sheet L1)	1.0	$8,212.25	$8,212.25	1.0	$8,212.25	0.0	$0.00	$0.00	1.0	$8,212.25	100.00%	$0.00	$0.00
35		455 SF of 2"-4" River Rock, 6 Depth with Filter Fabric. Complete and in place (Sheet L1)	1.0	$1,688.48	$1,688.48	1.0	$1,688.48	0.0	$0.00	$0.00	1.0	$1,688.48	100.00%	$0.00	$0.00
36		Project Contingency	1.0	$25,000.00	$25,000.00	1.0	$25,000.00	0.0	$0.00	$0.00	1.0	$25,000.00	100.00%	$0.00	$0.00
37		Flagpole Seatwall Planter and raised bronze lettering, Flagpole footings, pole install, and re-install of existing flagpole lighting	1.0	$(47,727.17)	$(47,727.17)	1.0	$(47,727.17)	0.0	$0.00	$0.00	1.0	$(47,727.17)	100.00%	$0.00	$0.00
38	50-250.MAT Exterior Specialties - Signage - Monument.Material	signs/plaques	0.0	$0.00	$0.00	0.0	$0.00	0.0	$0.00	$0.00	0.0	$0.00	100.00%	$0.00	$0.00
39	01-060.OTH General - Allowances - Owner.Other	signs/plaques	0.0	$0.00	$0.00	0.0	$0.00	0.0	$0.00	$0.00	0.0	$0.00	100.00%	$0.00	$0.00
		TOTALS:			**$556,853.06**		**$556,853.06**		**$0.00**	**$0.00**		**$556,853.06**	**100.00%**	**$0.00**	**$0.00**

Change Orders

A	B	C			D		E		F	G			H	I
ITEM NO.	DESCRIPTION OF WORK	SCHEDULED VALUE			FROM PREVIOUS APPLICATION (D + E)		THIS PERIOD		MATERIALS PRESENTLY STORED (NOT IN D OR E)	TOTAL COMPLETED AND STORED TO DATE (D + E + F)			BALANCE TO FINISH (C - G)	RETAINAGE
		QTY	UNIT PRICE	VALUE	QTY	VALUE	QTY	VALUE		QTY	VALUE	% (G / C)		
40	PCCO#003 Credit East Jordan Manhole Lid due to Existing being Left in Place	1.0	$(3,469.67)	$(3,469.67)	1.0	$(3,469.67)	0.0	$0.00	$0.00	1.0	$(3,469.67)	100.00%	$0.0	$0.0
41	PCCO#002	1.0	$(4,817.76)	$(4,817.76)	0.0	$(4,817.76)	0.0	$0.00	$0.00	0.0	$(4,817.76)	100.00%	$0.0	$0.0
	TOTALS:			**$(8,287.43)**		**$(8,287.43)**		**$0.00**	**$0.00**		**$(8,287.43)**	**100.00%**	**$0.00**	**$0.00**

Grand Totals

A	B	C	D	E	F	G		H	I
ITEM NO.	DESCRIPTION OF WORK	SCHEDULED VALUE	FROM PREVIOUS APPLICATION (D + E)	THIS PERIOD	MATERIALS PRESENTLY STORED (NOT IN D OR E)	TOTAL COMPLETED AND STORED TO DATE (D + E + F)	% (G / C)	BALANCE TO FINISH (C - G)	RETAINAGE
	GRAND TOTALS:	$548,565.63	$548,565.63	$0.00	$0.00	$548,565.63	100.00%	$0.00	$0.00

Completed Punch List

09/22/2025 / Todd Meaker

Complete

Score	3 / 9 (33.33%)	**Flagged items**	0	**Actions**	0

Conducted on	09/22/2025 5:51 PM CDT
Prepared by	Todd Meaker

Inspection	3 / 9 (33.33%)
Location of Project	500 W Live Oak St Hutto TX 78634 United States (30.5451711355524, -97.55197243403954)
Name of project	Veterans Memorial
Who Is The Contractor	Millis
Date and time	09/19/2025 1:30 PM CDT
Day	Friday

Items needing Correction

1.All lights need to work.
2 rails need to be installed
3. Sonna tube needs to be removed from light foundation.
4. Lower cleanout to grade.
5. Install Stars on the wall.
6. Cleaning motor splatter from around Memorial wall.
7. Fix exposed wiring on Memorial wall.
8. Wipe mortar that is showing separation.
9. Ensure plaques are level and straight.
10. Fix/hide blue irrigation wire.
11. Provide plans with red lines for electrical.
12. Lettering on the planter is missing

Walk Through Photos.

Items corrected	2 / 2 (100%)
Date and Time	05/12/2026 6:25 PM CDT
Day	Tuesday
Are all items corrected	Yes

Photos of corrected Items.


Photo 1

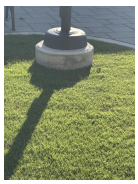
Photo 2

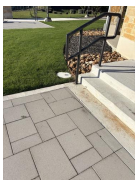
Photo 3


Photo 4


Photo 5


Photo 6

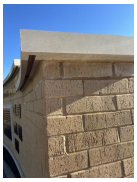

Photo 7

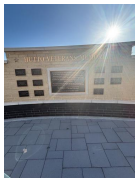

Photo 8

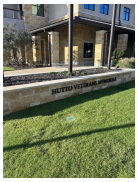

Photo 9

Media summary



Photo 1



Photo 2



Photo 3



Photo 4

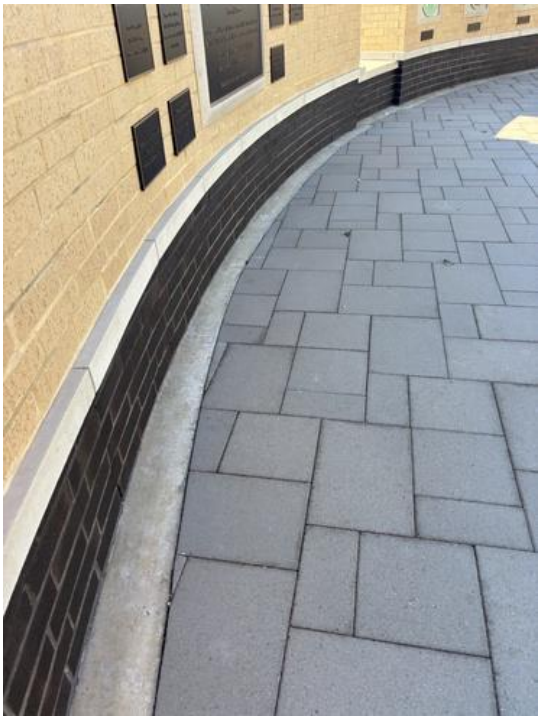

Photo 5



Photo 6



Photo 7



Photo 8



Photo 9

AGENDA ITEM REPORT
10.7.

To:	City Council
Subject:	Consideration and possible action on Ordinance No. O-2026-033 adopting the Second Amendment to the Stromberg Planned Unit Development (PUD) Zoning ordinance adopted by ordinance no. 0-2025-047, by allowing for residential, commercial and industrial uses by adding the First Amended development plan with the additional plan labeled as exhibit "B" with an expiration date of January 1, 2030, for the uses allowed by Exhibit "B". (Legal)
Meeting:	Thursday, September 3, 2026
Department:	Legal /
Staff Contact:	Dottie Palumbo

ITEM SUMMARY:

The ordinance has been revised in accordance with Council action of the August 6. 2026 meeting. All of the uses, residential, commercial and industrial allowed by the PUD have been incorporated into the ordinance along with certificate of occupancy be approved on or before the expiration date of January 1, 2030, for the concept plan, Exhibit "B".

This item was previously on the agenda for the August 20, 2026 City Council meeting. Due to the provision of materials from the developer, staff and legal counsel had not yet had an opportunity to fully review it and requested the item be postponed to the September 3, 2026 meeting for consideration.

STAFF RECOMMENDATION:

Move to approve the ordinance as presented.

FISCAL NOTES:

• Scenario 1 (90/10 Residential): Higher long-term service costs (public safety, parks, roadway maintenance) and lower net fiscal return per acre.
• Scenario 2 (50/50 Mix): Balanced fiscal profile with diversified land uses.
• Scenario 3 (Full Industrial): Highest net positive fiscal impact due to lower service costs and higher commercial tax base.

ATTACHMENTS:

1. Hutto Stromberg O-2026-033 8.14.26 Final 4924-0007-7256.4
2. Stromberg Exhibit A
3. Stromberg Exhibit B

AGENDA ITEM REPORT
10.7.

ORDINANCE NO. O-2026-033

AN ORDINANCE OF THE CITY OF HUTTO, TEXAS ADOPTING THE SECOND AMENDMENT TO THE STROMBERG PLANNED UNIT DEVELOPMENT (PUD) ZONING ORDINANCE ADOPTED BY ORDINANCE NO. O-2025-047, AS AMENDED, REPLACING THE PUD DEVELOPMENT STANDARDS ATTACHED AS EXHIBIT "B" TO ORDINANCE NO. O-2025-048 WITH THE PUD DEVELOPMENT STANDARDS ATTACHED AS EXHIBIT "B" HERETO, FOR 372.121 ACRES, MORE OR LESS, OF LAND IN HUTTO, WILLIAMSON COUNTY, TEXAS AND MORE PARTICULARLY DESCRIBED IN EXHIBIT "A" ATTACHED HERETO; PROVIDING FOR A PUBLICATION CLAUSE, SEVERABILITY CLAUSE, PENALTY CLAUSE AND EFFECTIVE DATE.

WHEREAS, a request has been made to the City Council of the City of Hutto, Texas to amend the Stromberg Planned Unit Development (PUD) Ordinance adopted by Ordinance No. O-2025-047, as amended by Ordinance No. O-2025-048 (as amended, the "Stromberg Planned Unit Development (PUD)") by replacing the existing PUD Development Standards with the PUD Development Standards attached as Exhibit "B" hereto and incorporated herein; and

WHEREAS, the Planning and Zoning Commission recommended denial of this requested second amendment on the 7th day of July 2026; and

WHEREAS, on the 6th day of August, 2026, after proper notification, the City Council held a public hearing on this requested second amendment; and

WHEREAS, the City Council determines that the zoning ordinance amendment provided for herein promotes the health, safety, morals and protects and preserves the general welfare of the community; and

WHEREAS, each and every requirement set forth in Chapter 211, Sub-Chapter A., Texas Local Government Code, and Article 14.02.002, Code of Ordinances (2020 Edition, as amended), City of Hutto, Texas concerning public notices, hearings, and other procedural matters has been fully complied with.

NOW, THEREFORE, BE IT ORDAINED BY THE CITY COUNCIL OF THE

CITY OF HUTTO, TEXAS:

SECTION 1: That the City Council has considered and made findings on the following matters regarding this proposed amendment to the Stromberg Planned Unit Development (PUD):

1) The PUD is consistent with the spirit of the community, neighborhood and other applicable land use and development plans, compatible with the character of adjacent development or recommended land uses, it would not adversely affect property near the site, and it achieves the benefits of improved design; and
2) The PUD will not adversely affect land with significant historical, cultural, recreational or aesthetic value; and
3) The PUD will give benefits through providing open space, parks, conservation of environmental features, aesthetic features and harmonious design, and/or energy efficient site design; and
4) The benefits of preserving land for open space, parks or other public amenities outweigh the potential impact from more intense or dense development on the site; and
5) The PUD controls external effects on nearby land uses such as movement and congestion of traffic; lighting; trash accumulation and litter; noise, air and water pollution; and other factors affecting public health, welfare, safety and convenience; and
6) The PUD will be served by adequate facilities including streets, fire protection, water and sanitation; and
7) The PUD does not have a significantly greater burden on the city's existing infrastructure, public improvements and services than development at a density permitted under the current zoning or suggested under community, neighborhood and other applicable land use and development plans, or arrangements are made to mitigate impacts; and
8) PUD architectural design, landscaping, hardscaping and signage parameters must give evidence of compatibility with adjacent development, internal consistency of design, and conformance to city design standards.

SECTION 2: That the Stromberg Planned Unit Development (PUD) is hereby amended for the property described in the **Exhibit "A"** attached hereto and incorporated herein, by: (i) replacing the existing PUD Development Standards attached as Exhibit “B” to Ordinance No. O-2025-048 with the PUD Development Standards attached hereto as **Exhibit "B"** and incorporated herein; and (ii) providing that the land uses permitted under development “Scenario 2” of such PUD Development Standards shall expire on January 1, 2030 (leaving only the land uses permitted under development “Scenario 1” in full force and effect), unless the owner(s)

of the property described in **Exhibit "A"** attached hereto and incorporated herein delivers written notice of intent to pursue development "Scenario 2", as an attachment to a City Pre-Development Meeting Application, on or before January 1, 2030, in which case the land uses permitted under development "Scenario 1" of such PUD Development Standards shall expire on January 1, 2030 (leaving only the land uses permitted under development "Scenario 2" in full force and effect). All other provisions of Ordinance Nos. O-2025-047 and O-2025-048 not modified by this ordinance shall remain in full force and effect.

SECTION 3: Publication Clause - The City Secretary of the City of Hutto shall publish this ordinance on the City's website and shall publish the adoption of this ordinance by the City Council, which shall be published in the approved City Council minutes as required by Hutto City Charter Section 3.13.

SECTION 4: Severability Clause - The provisions of this ordinance are severable, and if any sentence, section, or other parts of this ordinance should be found to be invalid, such invalidity shall not affect the remaining provisions, and the remaining provisions shall continue in full force and effect.

SECTION 5: Repealing Clause - All ordinances and resolutions and parts thereof in conflict herewith are hereby expressly repealed insofar as they conflict.

SECTION 6: Open Meeting Clause - The City Council hereby finds and declares that written notice of the date, hour, place, and subject of the meeting at which this ordinance was adopted was posted and that such meeting was open to the public as required by law at all times during which this ordinance and the subject hereof were discussed, considered, and formally acted upon, all as required by the Open Meetings Act, Chapter 551, Texas Government Code, as amended.

SECTION 7: Effective Date - Pursuant to Section 3.13 of the Hutto City Charter, this ordinance is adopted and enacted.

PASSED and **ADOPTED** by the CITY COUNCIL of the CITY OF HUTTO on the 3rd day of September, 2026, on a vote of __AYES; __NAYS, and __ABSTENTIONS.

(Remainder of page intentionally left blank.)

THE CITY OF HUTTO, TEXAS

_____
Mike Snyder, Mayor

ATTEST:

_____
Laura Hallmark, City Secretary

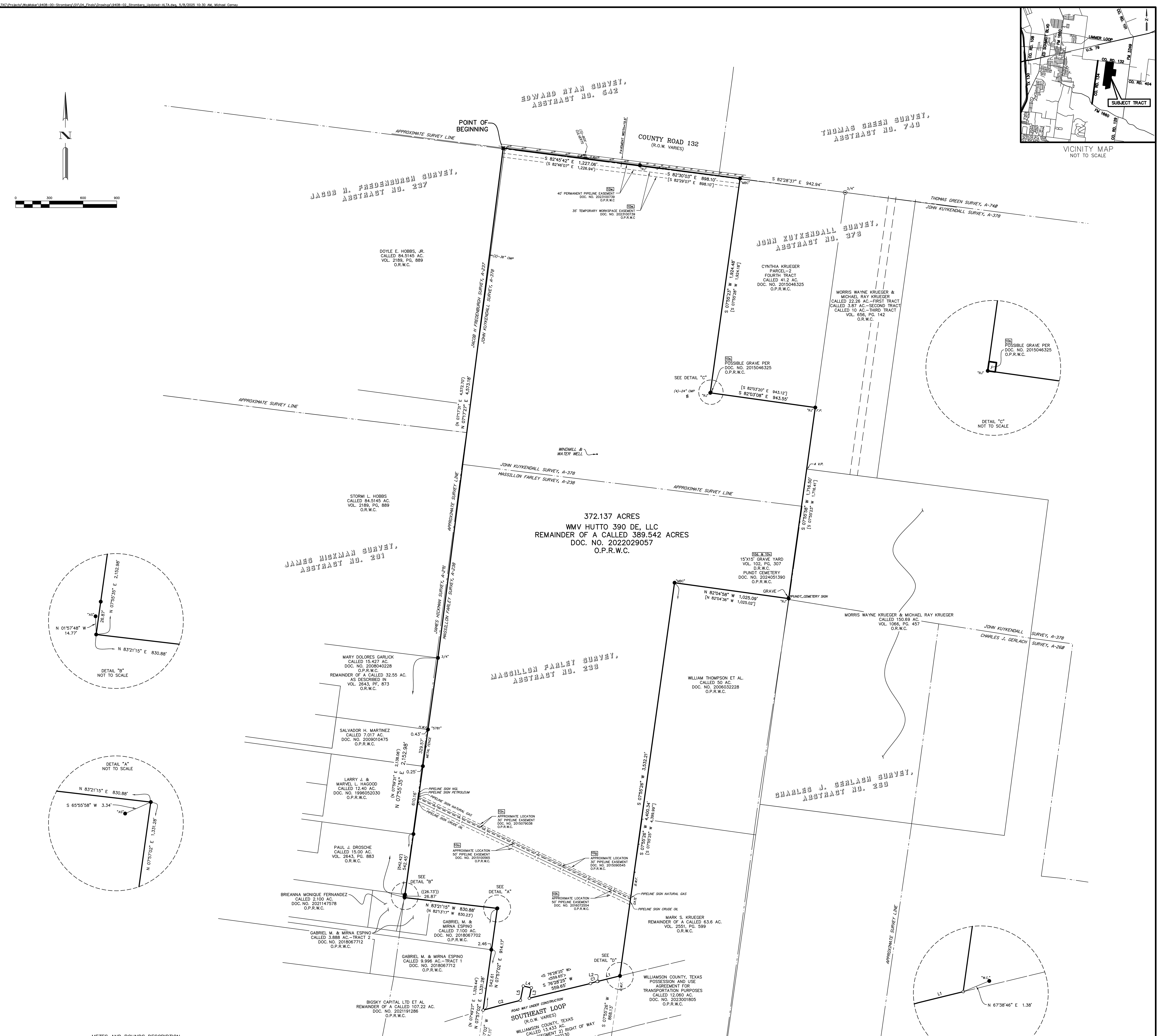

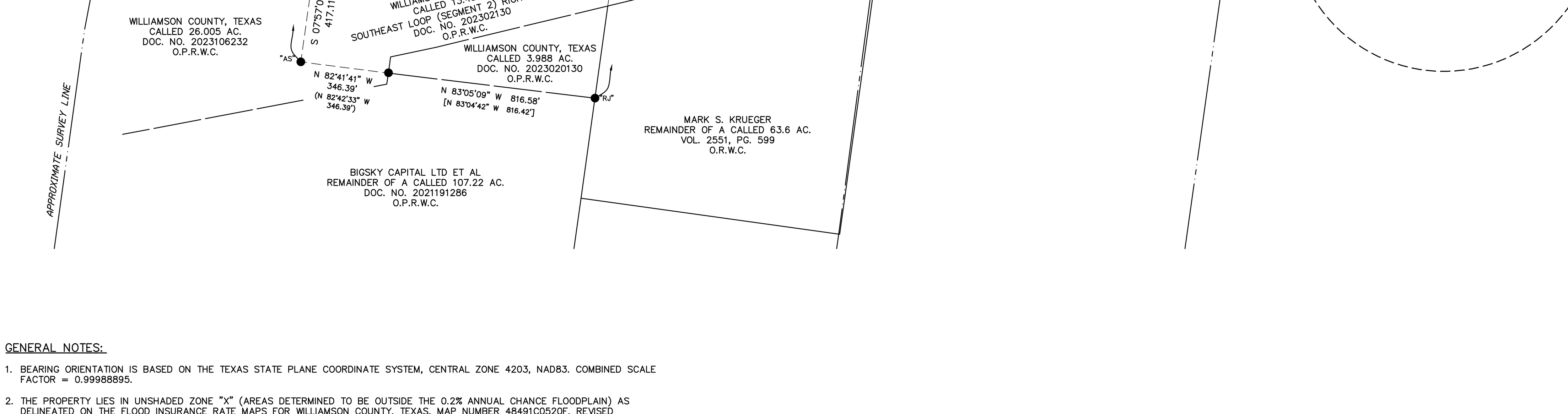

METES AND BOUNDS DESCRIPTION

FIELD NOTES FOR A 372.137 ACRE TRACT OF LAND OUT OF THE JOHN KUYKENDALL SURVEY, ABSTRACT NO. 378 AND THE MASSILLON FARLEY SURVEY, ABSTRACT NO. 238, WILLIAMSON COUNTY, TEXAS; BEING THE REMAINDER OF A CALLED 389.542 ACRE TRACT OF LAND AS CONVEYED TO WMV HUTTO 390 DE, LLC BY SPECIAL WARRANTY DEED RECORDED IN DOCUMENT NUMBER 2022029057 OF THE OFFICIAL PUBLIC RECORDS OF WILLIAMSON COUNTY, TEXAS; SAID 372.137 ACRE TRACT OF LAND BEING MORE PARTICULARLY DESCRIBED BY METES AND BOUNDS AS FOLLOWS:

BEGINNING at a chiseled "X" in concrete found on the south right-of-way line of County Road 132 (variable width right-of-way) at the northeast corner of a called 84.5145-acre tract of land as conveyed to Doyle E. Hobbs, Jr. by Correction Deed of Partition recorded in Volume 2189, Page 889 of the Official Records of Williamson County, Texas, at the northwest corner of the above described WMV Hutto 390 DE tract, for the northwest corner and POINT OF BEGINNING of the herein described tract;

THENCE, with the south right-of-way line of said County Road 132 and north line of said WMV Hutto 390 DE tract, S 82°45'42" E a distance of 1,227.06 feet to a 1/2-inch iron rod with cap stamped "RJ SURVEYING" found for angle point;

THENCE, continuing with the south right-of-way line of said County Road 132 and with the north line of said WMV Hutto 390 DE tract, S 82°30'03" E a distance of 898.10 feet to a 1/2-inch iron rod with cap stamped "MBC ENGINEERS" found at the northeast corner of said WMV Hutto 390 DE tract, at the northwest corner of a called 41.2-acre tract of land as conveyed to Cynthia Krueger by Executor's Deed recorded in Document Number 2015046325 of the Official Public Records of Williamson County, Texas, for the northeast corner of the herein described tract, from which a 3/4-inch pipe found on the south right-of-way line of said County Road 132, at the northeast corner of said Cynthia Krueger 41.2-acre tract, at the northwest corner of a called 36.13-acre tract of land as conveyed to Morris Wayne Krueger and Michael Ray Krueger by Deed of Gift recorded in Volume 656, Page 142 of the Official Records of Williamson County, Texas, bears S 82°28'37" E a distance of 942.94 feet;

THENCE, leaving the south right-of-way line of said County Road 132, with the east line of said WMV Hutto 390 DE tract, S 07°55'23" W a distance of 1,924.48 feet to a 1/2-inch iron rod with cap stamped "RJ SURVEYING" found at an interior corner of said WMV Hutto 390 DE tract, at the southwest corner of said Cynthia Krueger 41.2-acre tract, for an interior corner on the east line of the herein described tract;

THENCE, with a north line of said WMV Hutto 390 DE tract, S 82°03'08" E a distance of 943.55 feet to a 1/2-inch iron rod with cap stamped "RJ SURVEYING" found on the west line of said Morris Wayne Krueger and Michael Ray Krueger 36.13-acre tract, at the southeast corner of said Cynthia Krueger 41.2-acre tract, at an exterior corner of said WMV Hutto 390 DE tract, for an exterior corner on the east line of the herein described tract;

THENCE, with the east line of said WMV Hutto 390 DE tract, S 07°55'58" W a distance of 1,716.50 feet to a 1/2-inch iron rod with cap stamped "RJ SURVEYING" found on the west line of a called 150.69-acre tract of land as conveyed to Morris Wayne Krueger and Michael Ray Krueger by Warranty Deed with Vendor's Lien recorded in Volume 1066, Page 457 of the Official Records of Williamson County, Texas, at an exterior corner of said WMV Hutto 390 DE tract, at the northeast corner of a called 50.00-acre tract of land described in Volume 1993, Page 161 of the Official Records of Williamson County, Texas, as conveyed to William Thompson et al. by Warranty Deed recorded in Document Number 2006032228 of the Official Public Records of Williamson County, Texas, for an exterior corner on the east line of the herein described tract;

THENCE, with a south line of said WMV Hutto 390 DE tract, N 82°04'58" W a distance of 1,025.09 feet to a 1/2-inch iron rod with cap "MBC ENGINEERS" found at an interior corner of said WMV Hutto 390 DE tract, at the northwest corner of said James L. Jarvis 50.00-acre tract, for an interior corner on the east line of the herein described tract;

THENCE, with the east line of said WMV Hutto 390 DE tract, S 07°55'26" W a distance of 3,532.21 feet to a 1/2-inch iron rod with cap stamped "BGE INC" set on the north right-of-way line of Southeast Loop (right-of-way, varies) as conveyed to Williamson County, Texas by Deed (Southeast Loop (Segment 2) Right of Way) as recorded in Document Number 2023020130 of the Official Public Records of Williamson County, Texas, for the southeast corner of the herein described tract, from which a 5/8-inch iron rod with aluminum cap stamped Williamson County bears N 07°55'26" E a distance of 1.38 feet, and from which a 1/2-inch iron rod with cap stamped "RJ SURVEYING" found at the original southeast corner of said WMV Hutto 390 DE tract bears S 07°55'26" W a distance of 868.13 feet;

THENCE, leaving the east line of said WMV Hutto 390 DE tract, with the north right-of-way line of said Southeast Loop the following eight (8) courses;

1) S 76°12'05" W a distance of 199.68 feet to a 1/2-inch iron rod with cap stamped "BGE INC" set for angle point;

2) S 76°28'25" W a distance of 7.41 feet to a 1/2-inch iron rod with cap stamped "BGE INC" set at a point of curvature of a curve to the left;

3) Along said curve to the left an src distance of 62.92 feet, having a radius of 565.00 feet, a central angle of 6°22'51" and a chord which bears S 73°16'59" W a distance of 62.89 feet to a 1/2-inch iron rod with cap stamped "BGE INC" set for corner;

4) S 76°28'25" W a distance of 559.65 feet to a 1/2-inch iron rod with cap stamped "BGE INC" set for an exterior corner of the herein described tract;

5) N 11°18'32" E a distance of 94.34 feet to a 1/2-inch iron rod with cap stamped "BGE INC" set for an interior corner of the herein described tract;

6) N 77°30'40" W a distance of 74.02 feet to a 1/2-inch iron rod with cap stamped "BGE INC" set for an interior corner of the herein described tract;

7) S 11°18'32" W a distance of 130.14 feet to a 1/2-inch iron rod with cap stamped "BGE INC" set at a point of curvature of a non-tangent curve to the left, for an exterior corner of the herein described tract; and

8) Along said curve to the left an arc distance of 342.66 feet, having a radius of 9,440.00 feet, a central angle of 2°04'47" and a chord which bears S 75°18'03" W a distance of 342.64 feet to a 1/2-inch iron rod with cap stamped "BGE INC" set at a southeast corner of a remainder of a called 107.22-acre tract of land as conveyed to BigSky Capital Ltd. et al., by Special Warranty Deed recorded in Document Number 2021191286 of the Official Public Records of Williamson County, Texas, for the most southerly southwest corner of the herein described tract, from which a 1/2-inch iron rod with cap stamped "ALLSTAR 5729" previously found at the original southerly southwest corner of said WMV Hutto 390 DE tract bears S 07°57'02" W a distance of 417.11 feet;

THENCE, with a west line of said WMV Hutto 390 DE tract, N 07°57'02" E, pass a 1/2-inch iron rod found 2.46 feet left at a distance of 542.61 feet, and continuing on for a total distance of 914.17 feet to a 1/2-inch iron rod found at an interior corner of said WMV Hutto 390 DE tract, at the northeast corner of a called 7.100-acre tract of land as conveyed to Gabriel M. and Mirna Espino by Warranty Deed with Vendor's Lien recorded in Document Number 2018067702 of the Official Public Records of Williamson County, Texas, for an interior corner on the west line of the herein described tract, from which a 1/2-inch iron rod with cap stamped "ALLSTAR 5729" bears S 65°55'58" W a distance of 3.34 feet;

THENCE, with a south line of said WMV Hutto 390 DE tract and the north line of said Espino 7.100-acre tract, N 83°21'15" W a distance of 830.88 feet to a 1/2-inch iron rod found at an exterior corner of said WMV Hutto 390 DE tract, at an angle point on the east line of a called 2.100-acre tract of land as conveyed to Brieanna Monique Fernandez by Special Warranty Deed recorded in Document Number 2021147578 of the Official Public Records of Williamson County, Texas, at the northwest corner of the remainder of a called 3.888-acre tract of land as conveyed to Gabriel M. and Mirna Espino by General Warranty Deed recorded in Document Number 2018067712 of the Official Public Records of Williamson County, Texas, for an exterior corner on the west line of the herein described tract, from which a 1/2-inch iron rod with cap stamped "ALLSTAR 5729" bears N 01°57'48" W a distance 14.77 feet;

THENCE, with the west line of said WMV Hutto 390 DE tract and the east line of said Fernandez 2.100-acre tract, N 07°55'35" E, pass a 1/2-inch iron rod found at the northeast corner of said Fernandez 2.100-acre tract and the southeast corner of a called 15.00 acre tract as conveyed to Paul J. Drosche by Correction Warranty Deed recorded in Volume 2643, Page 883 of the Official Records of Williamson County, Texas, at a distance of 26.87 feet, pass a 1/2-inch iron rod found at the northeast corner of said Drosche 15.00-acre tract and the southeast corner of a called 12.40 acre tract as conveyed to Larry J. & Marvel L. Hagood by Correction Warranty Deed recorded in Document Number 1996052030 of the Official Public Records of Williamson County, Texas, at a distance of 569.32 feet, pass a 1/2-inch iron rod found 0.25 feet to the left at a distance of 1,179.48 feet, pass a 1/2-inch iron rod with cap stamped "RPLS 5781" found 0.43 feet to the left at a distance of 1,509.05 feet, and continuing on for a total distance of 2,152.98 feet to a 3/4-inch iron rod found at the northeast corner of a called 15.427-acre tract of land as conveyed to Mary Dolores Garlick by Special Warranty Deed recorded in Document Number 2008040228 of the Official Public Records of Williamson County, Texas, and the southeast corner of a called 84.5145-acre tract of land as conveyed to Stormi L. Hobbs by Deed of Partition recorded in Volume 2189, Page 889 of the Official Records of Williamson County, Texas, for an angle point on the west line of the herein described tract;

THENCE, continuing with the west line of said WMV Hutto 390 DE tract, N 07°17'27" E a distance of 4,573.18 feet to the POINT OF BEGINNING and containing 372.137 acres of land, more or less.

GENERAL NOTES:

1. BEARING ORIENTATION IS BASED ON THE TEXAS STATE PLANE COORDINATE SYSTEM, CENTRAL ZONE 4203, NAD83. COMBINED SCALE FACTOR = 0.99988895.
2. THE PROPERTY LIES IN UNSHADED ZONE "X" (AREAS DETERMINED TO BE OUTSIDE THE 0.2% ANNUAL CHANCE FLOODPLAIN) AS DELINEATED ON THE FLOOD INSURANCE RATE MAPS FOR WILLIAMSON COUNTY, TEXAS, MAP NUMBER 48491C0520F, REVISED DECEMBER 20, 2019.
3. THIS SURVEY WAS MADE IN RELIANCE UPON THAT CERTAIN COMMITMENT FOR TITLE INSURANCE ISSUED BY FIDELITY NATIONAL TITLE INSURANCE COMPANY, AND COUNTERSIGNED BY CAPSTONE TITLE UNDER FILE NO. 20250279, DATED EFFECTIVE APRIL 28, 2025, AND ISSUED MAY 07, 2025.
4. EVIDENCE OF RECENT EARTH MOVING WORK WAS OBSERVED ALONG THE SOUTHERLY LINE AT TIME OF SURVEY.
5. EVIDENCE OF RECENT STREET OR SIDEWALK CONSTRUCTION OR REPAIRS WAS OBSERVED AT TIME OF SURVEY. EXCEPT AS SHOWN HEREON, THE SURVEYOR HAS NO KNOWLEDGE OF ANY PROPOSED CHANGES IN STREET RIGHT OF WAY LINES AS SHOWN HEREON.

RESTRICTIVE COVENANT AND EASEMENT NOTES:

10d. SUBJECT TO ANY AND ALL RIGHTS AND PRIVILEGES EXISTING OR WHICH MAY LATER EXIST BY VIRTUE OF THAT PORTION OF THE PROPERTY BEING USED AS A CEMETERY; INCLUDING, BUT NOT LIMITED TO, THE RIGHTS TO SEPULCHER AND INTERMENT AND TO THE RIGHTS OF INGRESS AND EGRESS IN AND TO THE SAID CEMETERY; AS DISCLOSED BY DEED DATED SEPTEMBER 24, 1902, RECORDED IN VOLUME 102, PAGE 307, DEED RECORDS OF WILLIAMSON COUNTY, TEXAS, DOES AFFECT THE SUBJECT TRACT, AS SHOWN HEREON.

10e. PIPELINE EASEMENT DATED FEBRUARY 11, 1981, GRANTED TO SEMINOLE PIPELINE COMPANY, RECORDED IN VOLUME 828, PAGE 128, DEED RECORDS OF WILLIAMSON COUNTY, TEXAS, AS AFFECTED BY ASSIGNMENT RECORDED IN VOLUME 848, PAGE 291, DEED RECORDS OF WILLIAMSON COUNTY, TEXAS, DOES AFFECT THE SUBJECT TRACT. NOT PLOTTABLE.

10f. ALL RIGHTS, TERMS, CONDITIONS AND STIPULATIONS CONTAINED IN THAT CERTAIN TEMPORARY WORK SPACE AGREEMENT DATED MAY 21, 1992, EVIDENCED IN SUBORDINATION OF LIEN TO A GRANT OF EASEMENT AND TEMPORARY WORK SPACE, EXECUTED BY DONALD T. WALLIN, GARY I. WALLIN AND GERARD T. WALLIN, IN FAVOR OF SEMINOLE PIPELINE COMPANY, RECORDED IN VOLUME 2220, PAGE 803, OFFICIAL RECORDS OF WILLIAMSON COUNTY, TEXAS, DO AFFECT THE SUBJECT TRACT. NOT PLOTTABLE.

10g. EASEMENT AGREEMENT EXECUTED BY LPL-PTM LAND, LLC GRANTED TO SEMINOLE PIPELINE COMPANY, LLC FOR THE PURPOSE OF A PIPELINE EASEMENT, RECORDED UNDER DOCUMENT NO. 2015090545, OFFICIAL PUBLIC RECORDS OF WILLIAMSON COUNTY, TEXAS, DOES AFFECT THE SUBJECT TRACT, AS SHOWN HEREON.

10h. PERMANENT EASEMENT AGREEMENT EXECUTED BY LPL-PTM LAND, LLC, GRANTED TO ENTERPRISE CRUDE PIPELINE, LLC, FOR THE PURPOSE OF A PIPELINE EASEMENT, RECORDED UNDER DOCUMENT NO. 2016072554, OFFICIAL PUBLIC RECORDS OF WILLIAMSON COUNTY, TEXAS, DOES AFFECT THE SUBJECT TRACT, AS SHOWN HEREON.

10i. AN INGRESS AND EGRESS EASEMENT AND RIGHT-OF-WAY TO AND FROM WATER WELL, RECORDED IN VOLUME 232, PAGE 91, AND VOLUME 259, PAGE 176, DEED RECORDS, WILLIAMSON COUNTY, TEXAS, DOES AFFECT THE SUBJECT TRACT. NOT PLOTTABLE.

10j. AN ELECTRIC TRANSMISSION AND/OR DISTRIBUTION LINE EASEMENT GRANTED TO TEXAS POWER & LIGHT COMPANY, RECORDED IN VOLUME 286, PAGE 351, DEED RECORDS, WILLIAMSON COUNTY, TEXAS, MAY AFFECT THE SUBJECT TRACT. NOT PLOTTABLE.

10k. A PIPELINE EASEMENT AND RIGHT-OF-WAY GRANTED TO JONAH WATER SUPPLY CORP., RECORDED IN VOLUME 597, PAGE 991, DEED RECORDS, WILLIAMSON COUNTY, TEXAS, DOES AFFECT THE SUBJECT TRACT. NOT PLOTTABLE.

10l. A PIPELINE EASEMENT AND RIGHT-OF-WAY GRANTED TO JONAH WATER SUPPLY CORP., RECORDED IN VOLUME 598, PAGE 8, DEED RECORDS, WILLIAMSON COUNTY, TEXAS, DOES AFFECT THE SUBJECT TRACT. NOT PLOTTABLE.

10m. A PIPELINE EASEMENT GRANTED TO SEMINOLE PIPELINE COMPANY, RECORDED IN VOLUME 830, PAGE 364, DEED RECORDS, WILLIAMSON COUNTY, TEXAS, AND BEING FURTHER AFFECTED BY THAT CERTAIN SUPPLEMENTAL PIPELINE RIGHT- OF-WAY AGREEMENT, RECORDED IN VOLUME 2174, PAGE 461, OFFICIAL RECORDS, WILLIAMSON COUNTY, TEXAS, DOES AFFECT THE SUBJECT TRACT. NOT PLOTTABLE.

10n. EASEMENT AGREEMENT GRANTED TO SEMINOLE PIPELINE COMPANY, LLC, RECORDED UNDER DOCUMENT NO, 2015079038, OFFICIAL PUBLIC RECORDS, WILLIAMSON COUNTY, TEXAS, DOES AFFECT THE SUBJECT TRACT, AS SHOWN HEREON.

10o. PERMANENT EASEMENT AGREEMENT GRANTED TO ENTERPRISE CRUDE PIPELINE, LLC, RECORDED UNDER DOCUMENT NO. 2015100565, OFFICIAL PUBLIC RECORDS, WILLIAMSON COUNTY, TEXAS, DOES AFFECT THE SUBJECT TRACT, AS SHOWN HEREON.

10p. MATTERS CONTAINED IN THAT CERTAIN CITY OF HUTTO RESOLUTION, DATED AUGUST 2, 1982, RECORDED IN VOLUME 885, PAGE 64, DEED RECORDS, WILLIAMSON COUNTY, TEXAS, WHICH PROVIDES FOR, AMONG OTHER THINGS, A RESOLUTION ACCEPTING PROPERTY IN THE EXTRATERRITORIAL JURISDICTION OF THE CITY OF HUTTO, DO AFFECT THE SUBJECT TRACT. NOT PLOTTABLE.

10s. POSSIBLE GRAVE PER DOCUMENT NUMBER 2015046325 OF THE OFFICIAL PUBLIC RECORDS OF WILLIAMSON COUNTY, TEXAS, DOES NOT AFFECT THE SUBJECT TRACT.

10v. TERMS, CONDITIONS AND STIPULATIONS IN THE DECLARATION OF DEDICATION FOR CEMETERY PURPOSES FOR THE PUNDT CEMETERY RECORDED IN DOCUMENT NUMBER 2024051390, OF THE OFFICIAL PUBLIC RECORDS OF WILLIAMSON COUNTY, TEXAS, DOES AFFECT THE SUBJECT TRACT, AS SHOWN HEREON.

10w. TERMS, CONDITIONS AND STIPULATIONS IN THE MEMORANDUM OF GAS PIPELINE EASEMENT AND SUBORDINATION OF LIENHOLDER'S INTEREST RECORDED IN DOCUMENT NUMBER 2023100739, OF THE OFFICIAL PUBLIC RECORDS OF WILLIAMSON COUNTY, TEXAS, DOES AFFECT THE SUBJECT TRACT, AS SHOWN HEREON.

LINE TABLE

NUMBER	BEARING	DISTANCE
L1	S 76°12'05" W	199.68'
	<S 76°12'05" W>	<201.16'>
L2	S 76°28'25" W	7.41'
	<S 76°28'25" W>	<7.41'>
L3	N 11°18'32" E	94.34'
	<N 11°18'32" E>	<94.34'>
L4	N 77°30'40" W	74.02'
	<N 77°30'40" W>	<74.02'>
L5	S 11°18'32" W	130.14'
	<S 11°18'32" W>	<130.14'>

CURVE TABLE

NUMBER	ARC LENGTH	RADIUS	DELTA	CHORD BEARING	CHORD DISTANCE
C1	62.92'	565.00'	6°22'51"	S 73°16'59" W	62.89'
	<62.92'>	<565.00'>	<6°22'51">	<S 73°16'59" W>	<62.89'>
C2	342.66'	9,440.00'	2°04'47"	S 75°18'03" W	342.64'
	<343.51'>	<9,440.00'>	<2°05'06">	<S 75°18'03" W>	<343.51'>

LEGEND

B.W.F.	BARBED WIRE FENCE
CMP	CORRUGATED METAL PIPE
CONC.	CONCRETE
D.R.W.C.	DEED RECORDS OF WILLIAMSON COUNTY
FND.	FOUND
G.P.	GATE POST
G.R.	GUARD RAIL
H.W.F.	HOG WIRE FENCE
O.P.R.W.C.	OFFICIAL PUBLIC RECORDS OF WILLIAMSON COUNTY
O.P.W.C.	OFFICIAL RECORDS OF WILLIAMSON COUNTY
P.P.	POWER POLE
P.L.M.	PIPELINE MARKER
R.O.W.	RIGHT-OF-WAY
R.P.	REFLECTOR POST
V.P.	VERTICAL PIPE
W.W.	WATER WELL
( )	RECORD INFO. FOR DOCUMENT NO. 2018105369 O.P.R.W.C
[ ]	RECORD INFO. FOR DOCUMENT NO. 2018097245 O.P.R.W.C.
(( ))	RECORD INFO. FOR DOCUMENT NO. 2021147578 O.P.R.W.C.
{ }	RECORD INFO. FOR VOLUME 2643, PAGE 883 O.R.W.C.
< >	RECORD INFO. FOR DOC. NO. 2023020130 O.P.R.W.C.
●	FOUND 1/2" IRON ROD (UNLESS OTHERWISE NOTED)
● "RJ"	FOUND 1/2" IRON ROD W/CAP "RJ SURVEYING"
● "MBC"	FOUND 1/2" IRON ROD W/CAP "MBC ENGINEERING"
● "AS"	FOUND 1/2" IRON ROD W/CAP "ALLSTAR 5729"
● "5781"	FOUND 1/2" IRON ROD W/CAP "RPLS 5781"
● "W.C."	FOUND 5/8" IRON ROD W/ALUMINUM CAP "WILLIAMSON COUNTY"
⊙	FOUND 3/4" IRON PIPE
✖	FOUND "X" IN CONCRETE
○	SET 1/2" IRON ROD W/CAP "BGE INC"
—//—	EDGE OF ASPHALT
—OHT—	OVERHEAD TELEPHONE
—OHP—	OVERHEAD ELECTRIC
—x—	WIRE FENCE
—//—	BOARD FENCE
—o—	CHAIN LINK FENCE
10x.	SCHEDULE B ITEM NO.

To WMV Hutto 390 DE, LLC, a Delaware limited liability company, ACORE Capital Mortgage, LP, a Delaware limited partnership, Fidelity National Title Insurance Company and Capstone Title:

This is to certify that this map or plat and the survey on which it is based were made in accordance with the 2021 Minimum Standard Detail Requirements for ALTA/NSPS Land Title Surveys, jointly established and adopted by ALTA and NSPS, and includes Items Items 1-4, 7(a), 13, 16, 17 and 19 of Table A thereof. The field work was completed on October 25, 2021 and updated on April 29, 2025.

Date of Plat or Map: February 11, 2022
Revised: March 3, 2022
Revised: May 8, 2025

JONATHAN O. NOBLES RPLS NO. 5777
BGE, INC.
101 WEST LOUIS HENNA BLVD., SUITE 400
AUSTIN, TEXAS 78728
TELEPHONE: (512) 879-0400
EMAIL: JNOBLES@BGEINC.COM

STATE OF TEXAS REGISTERED JONATHAN O. NOBLES 5777 PROFESSIONAL LAND SURVEYOR

BGE, Inc.
101 West Louis Henna Blvd, Suite 400, Austin, TX 78728
Tel: 512-879-0400 • www.bgeinc.com
TBPELS Licensed Surveying Firm No. 10106500

Copyright 2025

ALTA/NSPS LAND TITLE SURVEY OF 372.137 ACRES OUT OF THE J. KUYKENDALL SURVEY, A-378 & AND THE M. FARLEY SURVEY, A-238 COUNTY ROAD 132, HUTTO WILLIAMSON COUNTY, TEXAS

PARTY CHIEF:	C.T., J.C.	ISSUE DATE:	05/08/2025	SHEET 1
TECHNICIAN:	M.G.,M.C	SCALE:	1"=300'	
R.P.L.S.:	J.N.	JOB NUMBER:	9408-02	
FIELD BOOK NAME:		86		OF 1
BASE FILE:	\\bgeinc\data\TXC\Projects\WayMaker\9408-00-Stromberg\SV\04_Finals\Drawings\9408-02_Stromberg_Updated-ALTA.dwg			

The Stromberg PUD

City of Hutto, Texas
Planned Unit Development

Attachment B
PUD Development Standards

May 28, 2026

Developer:
WMV Hutto 390 DE, LLC
3310 N. Capital of Texas Highway, Suite 202
Austin, TX 78746

Prepared by:
Gray Engineering
8834 N Capital of Texas Hwy #140
Austin, TX 78759

Table of Contents

A. GENERAL PROVISIONS 4
1. Title 4
2. Applicability of City Ordinances 4
3. Severability 4
4. Amendments to Ordinance 4
5. Definitions 5
B. DEVELOPMENT PLAN AND LAND USES 5
1. Development Scenarios 5
2. Residential Land Use 6
3. Non-Residential Land Use 7
4. Use Descriptions and Standards 7
C. DEVELOPMENT STANDARDS 8
1. Unified Development Code PUD Standard Table 8
2. Prohibited Land Uses 8
3. Dog Park Facility 9
4. Trail System 9
5. Site Design (10.404) 9
a. Sidewalks (10.403.9) 9
b. Internal Pedestrian Circulation for Multi-Family Component (10.403.10) 9
c. Water Bodies and Retention (10.403.14) 10
d. Parking and Access (10.405) 10
e. Pedestrian Crossings (10.610.2.4) 10
6. Architectural Design (10.406) 10
a. Driveway Lengths 10
7. Landscaping (10.407) 11
a. Street Trees 11
b. Required Landscaping: MF District 11
c. Required Landscaping: Non-Residential Districts (B-1, B-2 & LI) 12
d. Parking Lot and Vehicular Use Screening 12
e. Materials, Maintenance, and Replacement 13
f. Irrigation 13

8. Data Center (10.308.13) 13
a. Required Bufferyards 13
b. Conditions 14
c. Utility Substations 14
D. EXHIBITS 15

(This space is left intentionally blank)

A. GENERAL PROVISIONS

1. Title

This ordinance is known as The Stromberg Planned Unit Development Ordinance and may be cited as “The Stromberg PUD” or “Stromberg PUD”.

2. Applicability of City Ordinances

The Property shall be regulated for purposes of zoning and subdivision by this PUD Plan. Any aspects not specifically mentioned or altered by this Plan shall be regulated by the Unified Development Code of the City of Hutto, Texas (the “UDC”) in effect on the date of adoption of this ordinance.

3. Severability

In case one or more provisions contained of this Plan are deemed invalid, illegal or unenforceable in any respect such invalidity, illegality or unenforceability shall not affect any other provisions of this Plan and in such event, this Plan shall be construed as if such invalid, illegal or unenforceable provision had never been contained in this Plan.

4. Amendments to Ordinance

Technical, site planning or engineering considerations that meet the intent of this PUD may call for minor modifications from the approved PUD. The Development Services Director may approve minor modifications if they promote flexibility in design and are consistent with the intent of the original PUD approval.

Modifications to the PUD shall be administered as follows:

Modifications of the Concept Plan pertaining to the mixture of alley-loaded and front-loaded product, roadway alignments, and changes in the density shown on the Concept Plan that do not increase the cumulative density of development on the Land by more than ten percent (10%), calculated by gross site area shall be considered “Minor Modifications” over which the City’s Development Services Director has final review and decision-making authority.

All other changes to the Concept Plan that are not Minor Modifications shall be considered “Major Modifications.” Major Modifications to the Concept Plan must be approved as an amendment to this PUD Ordinance by the City Council. After approval by the City in accordance with these requirements, all Minor Modifications and Major Modifications to the Concept Plan shall be recorded by the City at the Property owner’s expense in the Official Records of Williamson County, and thereafter, all references in this Development Plan to the Concept Plan shall mean and refer to the then most current approved and recorded Concept Plan.

Minor Modifications to the Concept Plan allowed by this Development Plan shall not be deemed to be changes to the Project under Chapter 245 of the Texas Local Government Code. All Major Modifications to the Concept Plan shall be deemed to be changes to the Project under Chapter 245 of the Texas Local Government Code, and the provisions of the UDC and all other applicable laws and regulations in effect at the time of such Major Modifications shall apply unless the City agrees otherwise.

Approval of this Development Plan does not constitute plat or site plan approval, and all development related approvals required by the UDC are still required. The request for an amendment to the PUD Ordinance shall not subject the entire application to public hearing, but only that portion necessary to rule on the specific issue requiring the relief.

5. Definitions

Definitions set forth in the UDC, including general abbreviations, terms definitions and conditions for use indicated throughout this ordinance shall apply to this PUD.

- "PUD Plan" or "Plan" – The Stromberg Planned Unit Development document.
- "Concept Plan" – The Stromberg Concept Plan or Development Plan as required in the City of Hutto's PUD Zoning Change Application.

B. DEVELOPMENT PLAN AND LAND USES

1. Development Scenarios

For the purpose of addressing any development regulation or conditions not modified within this PUD, the City of Hutto UDC base zoning districts shall be utilized for development requirements, as indicated in the scenarios presented in Exhibit B: The Stromberg Concept Plan. Exhibit B is conceptual in nature and is intended to convey the general vision for the development. Exhibit B demonstrates two different scenarios of Residential versus Non-Residential development. The purpose of the PUD is to seek flexible development and building standards that will accommodate a layout that allows for market-based outcomes. The Development Services Director may administratively approve modifications to this plan, as long as the general design intent and principles remain consistent with the language of this PUD.

Scenario 1



**Maximum percentages*

Scenario 1 substantially conforms to approved Future Land Use Map (FLUM) amendment from 2021. The updated FLUM included in the Hutto SOAR 2040 Comprehensive Plan was created around the 2021 request and is still compliant and in effect to date.

Scenario 2

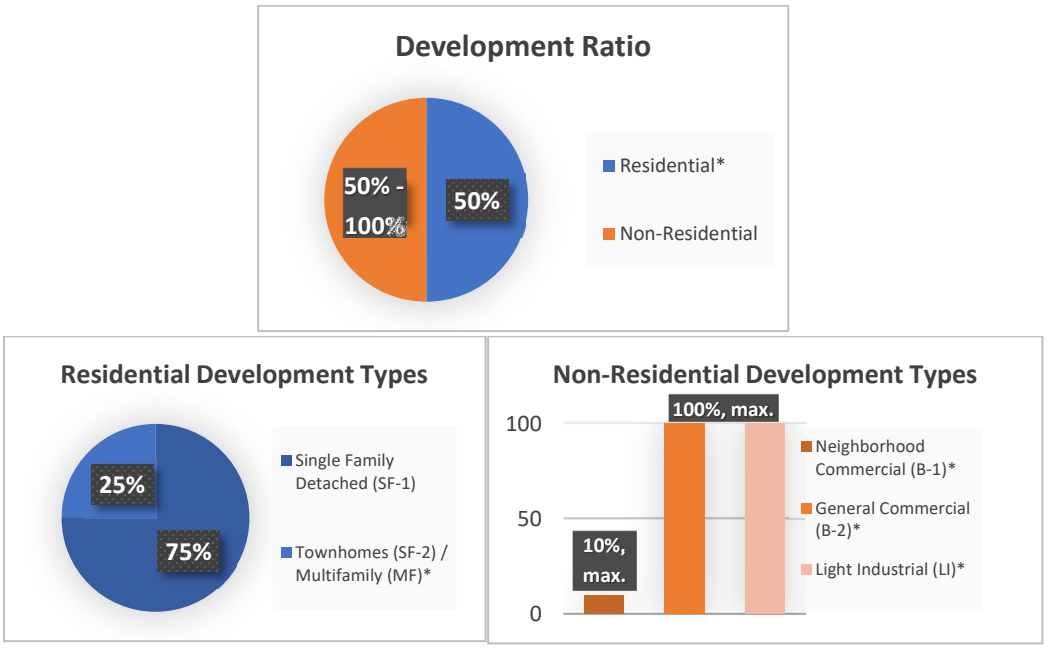

**Maximum percentages*

The Future Land Use Map (FLUM) as included in the Hutto SOAR 2040 Comprehensive Plan shows Heavy Industrial and Neighborhood uses on either side of CR 132. Scenario 2 as presented in this PUD provides for a transitional opportunity between Heavy Industrial and Neighborhood through the incorporation of Light Industrial on the north side of the Stromberg project. As such, Scenario 2 substantially conforms to the spirit of the FLUM and will not warrant the need for a FLUM amendment.

Charts above are representative of land use percentages.

2. Residential Land Use

The Stromberg PUD is an amenitized development with the Residential portion of the development being comprised of a combination of detached single-family and townhome units, as well as attached and detached multi-family units.

Residential base zoning districts to be allowable as indicated in Exhibit B: Single Household: SF-1, Village (for 45' lots); Single Household: SF-1, Alley Load, Cul-de-Sac, Detached Garage (for 50' lots); Single Household: SF-1, Medium Density (for 60' lots and amenity area); Two-to-Four Household: SF-2 (for townhomes); and Multiple Household: MF (for attached and detached multi-family).

Within the Multifamily (MF) portion of the project, at least three (3) of the amenities described below will be incorporated:

- Community pool
- Barbeque area(s)
- Children's playground
- Social gathering area with fire pit
- Community center outfitted with a gathering space for community and/or private events.

Both the attached and detached single-family units will have individual entries and private, fenced yard areas.

The Residential portion of the project is intended to be used for a unique mix of housing products with a maximum density of 6 dwelling units per gross acre for the SF-1 development areas (a maximum of 70% of the SF-1 lots can be 45' in width, a maximum of 40% of the SF-1 lots can be 50' in width and a minimum of 10% of the lots onsite can be 60' & 70' in width), 17 dwelling units per gross acre for the SF-2 development areas, and a maximum density of 30 dwelling units per gross acre for the multi-family portion.

3. Non-Residential Land Use

The Non-Residential portion of the project is intended to be used for a unique mix of commercial and industrial uses. Commercial uses are intended to be located along the major thoroughfares and at the perimeter of the development. Non-Residential base zoning districts to be allowable as indicated in Exhibit B: Local/ Neighborhood Commercial: B-1; General Commercial: B-2; and Light Industrial: LI.

4. Use Descriptions and Standards

Unless otherwise modified within this PUD, refer to the UDC for definitions of uses and standards for residential uses, commercial and retail uses, light industry uses, institutional and civic uses, temporary uses, and accessory uses.

C. DEVELOPMENT STANDARDS

1. Unified Development Code PUD Standard Table

Table 1. Unified Development Code PUD Standard Table

Zoning	Description	UDC Citation	UDC Standard	PUD Replacement Standard
SF-1	Village	10.403.3	Alley loaded not permitted	Alley loaded permitted
		10.406.3.3.1	A front-loading garage may occupy no more than 50% of the house linear frontage, and may protrude no more than 6 ft. from the longest front wall.	Front-loading garage doors may comprise no more than 55% of the house linear frontage, and may protrude no more than 6 ft. from the longest front wall
SF-2	Two to Four Household	10.403.3	Lot Area (min.) = 4,500 s.f.	Lot Area (min.) = 3,120 s.f.
			Lot width at building line (min.) = 45 ft.	Lot width at building line (min.) = 26 ft
		10.406.3.3.1	A front-loading garage may occupy no more than 50% of the house linear frontage, and may protrude no more than 6 ft. from the longest front wall.	Front-loading garage doors may comprise no more than 55% of the house linear frontage, and may protrude no more than 6 ft. from the longest front wall. Garages for 26 ft lot widths will be single car garages.
MF	Multiple Household	10.403.4.2	Spacing between bldgs. (min.) = 20 ft.	Spacing between bldgs. (min.) = 10 ft.
			Bldg. height (max.) = 35 ft.; 45 ft. along freeways, arterials, major non-residential collectors	Bldg. height (max.) = 50 ft. / 4 stories
		10.303.5	Max. Density = 14-20 dwelling units per acre	Max. Density = 30 dwelling units per gross acre

2. Prohibited Land Uses

The Stromberg PUD will allow the residential uses with development standards as described in this document. The Stromberg PUD will allow commercial and retail uses permitted under the B-1 and B-2 zoning designations, except as prohibited in the following land use list.

Prohibited B-1 and B-2 Land Uses:

- Commercial and Retail Uses (10.304.6)
  - Nightclub
- Accessory Uses (10.304.10)
  - Wind energy system

The Stromberg PUD will allow industrial uses permitted under the LI zoning designation, except as prohibited in the following land use list.

Prohibited LI Land Uses:

- Commercial and Retail Uses (10.304.6)
  - Adult oriented use
- Accessory Uses (10.304.10)

    - Wind energy system
- Smokestacks
- Solar farms
- Concrete batch plant
- Rock crushing site
- Mining and extraction
- Petrochemical industries
- Rubber refining
- Primary metal or related industries
- Junkyard

3. Dog Park Facility

At least one (1) dog park shall be provided (privately owned and maintained) within the boundaries of the Stromberg PUD. The dog park(s) may be located fully within one or more of the multi-family developments and/or elsewhere on the Property. If the dog park is located within an easement, no structures other than a fence will be allowed to be constructed. The dog park(s) will be privately owned and maintained. Signage will be provided within any Dog Park Facility alleviating the City of any potential liability. The signage will indicate that Residents are to proceed at their own risk.

4. Trail System

The Stromberg PUD shall include an internal trail system to connect land use areas within the boundaries of the development. Any off-street trails may be connected to sidewalks to continue the connectivity of the overall development, as necessary and appropriate. It is anticipated that a pedestrian may be no more than a 10-minute walk from a commercial location within the development. The Trail System will be designed in accordance with Hutto's Parks Master Plan (further coordination with the City will be conducted with each phase of development to ensure compliance).

5. Site Design (10.404)

a. Sidewalks (10.403.9)
   To increase pedestrian connectivity, sidewalks with a width of eight feet (8') will be required along both sides of major collectors and both sides of major arterial roadways adjacent to and within one hundred feet (100') of any commercial lot and/or the future school lot.

b. Internal Pedestrian Circulation for Multi-Family Component (10.403.10)
   Sidewalks will be provided internally for pedestrian circulation from the parking areas to the individual units. A minimum of 5 ft sidewalks shall be located adjacent to parking areas and minimum four-foot (4 ft) sidewalks to connect parking areas to the individual units and open spaces. Final configurations and alignments will be defined during the site plan development application process.

c. Water Bodies and Retention (10.403.14)
Retention ponds will not be implemented as a part of the Stromberg PUD; therefore, this section of the Hutto Site Design Standards does not apply. Onsite detention will be provided as part of the Stromberg development. Detention ponds may include appropriate amenities with approval from City Engineer.

d. Parking and Access (10.405)

Table 2. Minimum Parking Requirements Table

Land Use Classification	Required Spaces (minimum)	Required Spaces (maximum)
The Stromberg PUD Detached/Attached MF Units	1 per 1 bedroom unit 1.5 per 2 bedroom unit 2 per 3 bedroom unit The total required spaces shall be increased by 5% to account for guest parking 2% of the parking spaces will be allocated as handicapped	2 per 1 bedroom unit 2.5 per 2 bedroom unit 3 per 3 bedroom unit The total required spaces shall be increased by 7% to account for guest parking 4% of the parking spaces will be allocated as handicapped

Dead end aisles may have no more than 30 parking spaces. Project will be compliant with the International Fire Code, Appendix D - Fire Apparatus Access Roads.

e. Pedestrian Crossings (10.610.2.4)
Signalized pedestrian crossings will be provided across major collectors and arterials to ensure safe pedestrian crossing. These crossings may range from a flashing beacon with pedestrian signage to pedestrian hybrid beacon crossings. Pedestrian signals or hybrid beacons will be used to allow for longer crossing times in shopping districts and/or mid-block crossings. Pedestrian crossings will be provided as each phase of development is completed along the major collectors and arterials.

6. Architectural Design (10.406)

a. Driveway Lengths
Whether located in front of or behind a single-family or townhome residence, driveway lengths should be sufficient to accommodate up to two (2) vehicles parked side by side without obstructing any pedestrian connection. The minimum dimensions for any residential driveway shall be 12’ wide by 15’ depth.

7. Landscaping (10.407)

The Stromberg PUD will comply with requirements of UDC Section 10.407 unless otherwise specified in this document. For any landscaping implemented within the Stromberg PUD, as required by the UDC or herein, Xeriscaping will be required.

a. Street Trees

Although the City of Hutto UDC does not currently enforce implementation of street trees, the Stromberg PUD will require vegetation along major thoroughfares as noted in Table 3 below. By specifying certain drought tolerant species from the City of Hutto approved plant list, the Stromberg PUD aims to achieve a higher level of aesthetic theming. Tree locations and final configuration will be determined during the site development plan stage.

Selected Native Tall Trees from Section 10.407.6.2 of the Hutto UDC: Blackjack Oak, Bur Oak, Pecan, Shumard Oak and Winged Elm (female only).

Selected Native Short Trees from Section 10.407.6.3 of the Hutto UDC: American Smoke Tree, Crape Myrtle, Desert Willow, Mountain Laurel and Possumhaw Holly.

Selected Native Shrubs from Section 10.407.6.4 of the Hutto UDC: Deer Muhly, Fragrant Sumac, Japanese Barberry, Texas Sage and Texas Sotol.

Table 3. Street Tree Table

Street Classification	Street Trees per Linear Feet of Frontage	Tree Criteria
Major Collector	1 tree per 75 linear feet	3 caliper inches measured 3' above final grade at base of tree
Major Arterial	1 tree per 120 linear feet	3 caliper inches measured 3' above final grade at base of tree

b. Required Landscaping: MF District

Landscaping areas: A minimum percentage of the net area being developed shall be landscaped in accordance with the following percentages.

Residential MF: 20%

The planting requirements listed in the chart below shall be required within the residential portion of the PUD Landscape Areas and fully meet the minimum landscape requirements for the Project. Tree locations and final configuration will be determined during the site development plan stage.

Area	Native tall trees (3in. caliper and 10' tall min.)	Native small trees (2 in. caliper and 8' tall min.)	Native shrubs (3 gallon or 18" tall min.)
MF Residential Units: Landscape required per individual unit	1 per unit	1 per unit	5 per unit

All Required Landscaping within an easement is subject to the approval of the owner of the easement. When in conflict, adjustments to the requirements above may be permitted by-right if required by the easement owner.

c. Required Landscaping: Non-Residential Districts (B-1, B-2 & LI)
Landscaping areas: A minimum percentage of the net area being developed shall be landscaped in accordance with the following percentages:

Commercial (B-1 & B-2): 15%

Light Industrial (LI): 10%

The planting requirements listed in the chart below shall be required within the commercial portion of the PUD Landscape Areas and fully meet the minimum landscape requirements for the Project. Tree locations and final configuration will be determined during the site development plan stage.

Area	**Native tall trees (3in. caliper and 10' tall min.)**	**Native shrubs (3 gallon or 18" tall min.)**
Commercial (B-1 & B-2)	1 per every 500 sf of landscaping required	2 per every 500 sf of landscaping required
Light Industrial (LI)	1 per every 500 sf of landscaping required	2 per every 500 sf of landscaping required

Two native small ornamental trees may be substituted for one native tall tree, not to exceed 50% of the required tall trees.

d. Parking Lot and Vehicular Use Screening
   i. Requirements
      1. Vehicular use areas shall be screened from all abutting rights-of-way by a continuous landscaped area not less than 10ft. deep.
      2. Vehicular use areas shall be screened from all abutting private property by a continuous landscaped area not less than 8 ft. deep.
      3. Landscape screening shall contain one (1) large tree per sixty (60) linear feet, or portion thereof, and a hedge not less than 3 ft. in height, at full maturity, for 75% of the right-of-way landscape screening area (linear footage), and 67% of the private property landscape screening area (linear footage).
      4. In addition to the required vehicular use screening, all outdoor parking shall have landscaping islands within the parking area equal to not less than 7% of the gross parking lot area. Required parking lot landscaping may be counted toward the minimum landscaped area required.
   ii. Landscaping required under Section 7.b. & 7.c. above may be counted towards landscaping required in Section 7.d.i. above.

iii. Unless otherwise stated in this PUD, no other landscaping requirements shall be required.
iv. All Required Landscaping within an easement is subject to the approval of the owner of the easement. When requirements are in conflict, adjustments to the requirements above may be permitted by right if required by the easement owner.

e. Materials, Maintenance, and Replacement
   i. Plant Materials
      1. Plant choices must be based on the Central Texas ecological setting and site microclimate conditions. Plant choices must classify as drought-tolerant to fall within the xeriscaping category.
   ii. Maintenance:
      1. Trees and vegetation, irrigation systems, fences, walls, and other landscape elements are considered elements of the project in the same way as parking, building materials and other site details.
      2. The applicant, landowner or successors must jointly be responsible for regular maintenance of all landscaping elements in good condition, including wood fencing, walls, or other screening fencing within the community. Landscaping must be maintained free from disease, pests, weeds, and litter.
   iii. License Agreement
      1. A License Agreement(s) shall be required for the installation and maintenance of any landscaping, signage, or other similar facilities within the City right-of-way. Such facilities may include: Project entry signage at major intersections; directional signage; Street signs; Lighting, including enhanced streetlights and landscape lighting; Intersection and crosswalk enhancements, consisting of pavers, stamped and/or integrated color concrete; Sidewalks; Landscaping, including plant beds and street trees; Site furnishings, such as benches, planters, trash receptacles; Irrigation; and Decorative Walls. The Owner shall make application for a License Agreement(s) at the time of Site Plan or construction plan submittal.

f. Irrigation
   i. Automatic irrigation shall be provided on site in compliance with Section 10.407.7 of the UDC.
   ii. Drip irrigation shall be provided for planting beds only and is not required for the irrigation of trees.

8. Data Center (10.308.13)

a. Required Bufferyards
   Any Data Center use within the Light Industrial (LI) zoned portion of the project adjacent to a residentially zoned portion of the project shall provide a bufferyard with a minimum

width equal to 1.5 ft for every one foot in building height of the Data Center. The bufferyard shall consist of one of the following:

- Proposed Arterial Street Section with a minimum of 30 ft. wide planting area (planting areas can be non-adjacent to each other as shown in the street cross section, below). Street trees will be provided as outlined in the section above to provide for a visual screen between land uses
- Buildings with a transitional use type (Multifamily)

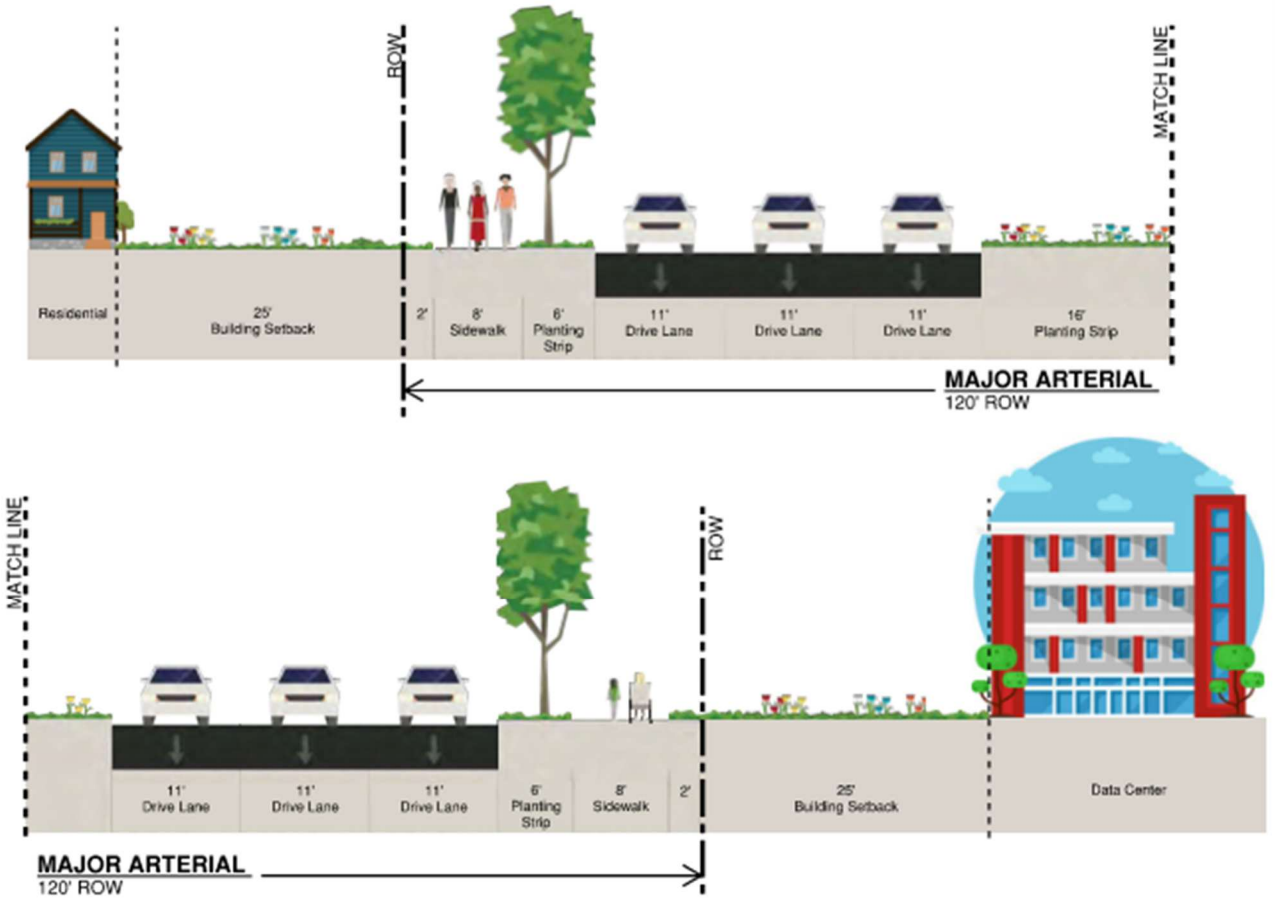

b. Conditions

Subject to the Required Bufferyards as outlined above, Data Center development will be permitted by right as part of the Light Industrial (LI) zoning within this PUD. As such, Data Centers will be allowed a maximum height of 120 feet. Regardless of height, Data Centers shall be subject to the criteria applicable to all Industrial uses identified by the Unified Development Code, unless otherwise specified within this PUD.

c. Power Plant

Up to 20% of the Stromberg project may include dedicated on-site power generation facilities, including but not limited to natural gas-fired power plants, single-cycle or combined-cycle generation facilities, cogeneration or combined heat and power (CHP)

facilities, reciprocating engine generation, fuel cells, battery energy storage systems and/or renewable energy generation facilities.

i. Setback: The power plant site within the overall Stromberg project shall be set back a minimum of 300 feet from the property boundary.
ii. Height: Power plants will be allowed a maximum height of 120 feet.
iii. Bufferyard: a 30-foot-wide planting area around the perimeter of the power plant (potentially within the setback) shall be required. Within the 30-foot-wide planting area, an 8-foot-tall masonry wall shall be required along with two native evergreen tall trees and one native evergreen short tree per 25 linear feet of bufferyard.

d. Utility Substations
All substations will have a solid, masonry fence with a height sufficient to conceal the substation, but no shorter than 6ft in height. (10.408.5 of the UDC)

D. <u>EXHIBITS</u>

Exhibit A: Survey
Exhibit B: The Stromberg Concept Plan

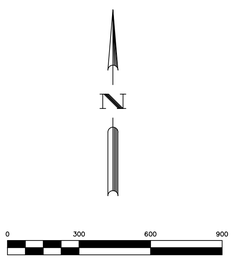

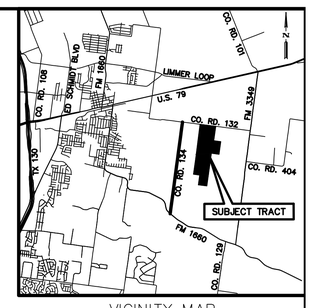

VICINITY MAP
NOT TO SCALE

EDWARD RYAN SURVEY, ABSTRACT NO. 542

JACOB H. FREDENBURGH SURVEY, ABSTRACT NO. 237

THOMAS GREEN SURVEY, ABSTRACT NO. 740

JOHN KUYKENDALL SURVEY, ABSTRACT NO. 378

JAMES HICKMAN SURVEY, ABSTRACT NO. 291

MASSILLON FARLEY SURVEY, ABSTRACT NO. 238

CHARLES J. GERLACH SURVEY, ABSTRACT NO. 260

POINT OF BEGINNING

COUNTY ROAD 132
(R.O.W. VARIES)

APPROXIMATE SURVEY LINE

(S 82°46'07" E 1,226.94')
S 82°45'42" E 1,227.06'

(20' BRK CTR'LINE)

PAVEMENT WIDTH=18.6'

[S 82°29'07" E 898.10']
S 82°30'03" E 898.10'

S 82°28'37" E 942.94'

THOMAS GREEN SURVEY, A-740
JOHN KUYKENDALL SURVEY, A-378

DOYLE E. HOBBS, JR.
CALLED 84.5145 AC.
VOL. 2189, PG. 889
O.R.W.C.

(2)-36" CMP

JACOB H FREDENBURGH SURVEY, A-237
JOHN KUYKENDALL SURVEY, A-378

S 07°55'28" W 2,509.50'

CYNTHIA KRUEGER
PARCEL-2
FOURTH TRACT
CALLED 41.2 AC.
DOC. NO. 2015046325
O.P.R.W.C.

S 07°55'23" W 1,924.48'
[S 07°55'28" W 1,924.18']

MORRIS WAYNE KRUEGER &
MICHAEL RAY KRUEGER
CALLED 22.26 AC.-FIRST TRACT
CALLED 3.87 AC.-SECOND TRACT
CALLED 10 AC.-THIRD TRACT
VOL. 656, PG. 142
O.R.W.C.

10t POSSIBLE GRAVE PER
DOC. NO. 2015046325
O.P.R.W.C.

SEE DETAIL "C"

(4)-24" CMP

[S 82°03'20" E 943.12']
S 82°03'08" E 943.55'

"RJ"

DETAIL "C"
NOT TO SCALE

(N 07°17'31" E 4,572.20')
N 07°17'27" E 4,573.18'

APPROXIMATE SURVEY LINE

WINDMILL & WATER WELL

"MBC"

TRACT 1
M. MOORE FAMILY FARMS, LLC
CALLED 194.58 AC.
DOC. NO. 2018097245
O.P.R.W.C.

JOHN KUYKENDALL SURVEY, A-378
MASSILLON FARLEY SURVEY, A-238

APPROXIMATE SURVEY LINE

4 V.P.

S 07°55'58" W 1,716.50'
[S 07°55'23" W 1,716.41']

STORMI L. HOBBS
CALLED 84.5145 AC.
VOL. 2189, PG. 889
O.R.W.C.

TRACT 2
M. MOORE FAMILY FARMS, LLC
CALLED 194.88 AC.
DOC. NO. 2018105369
O.P.R.W.C.

TOTAL
389.542 ACRES

JAMES HICKMAN SURVEY, A-291
MASSILLON FARLEY SURVEY, A-238

APPROXIMATE SURVEY LINE

104 15'x15' GRAVE YARD
VOL. 102, PG. 307
D.R.W.C.
GRAVE

N 82°04'58" W 1,025.09'
[N 82°04'36" W 1,025.02']

"MBC"

"RJ"

MORRIS WAYNE KRUEGER & MICHAEL RAY KRUEGER
CALLED 150.69 AC.
VOL. 1066, PG. 457
O.R.W.C.

JOHN KUYKENDALL SURVEY, A-378
CHARLES J. GERLACH SURVEY, A-260

WILLIAM THOMPSON ET AL.
CALLED 50 AC.
DOC. NO. 2006032228
O.P.R.W.C.

DETAIL "B"
NOT TO SCALE

N 01°57'48" W 14.77'

"AS"

26.87' N 07°55'35" E 2,152.98'

N 83°21'15" E 830.88'

MARY DOLORES GARLICK
CALLED 15.427 AC.
DOC. NO. 2008040228
O.P.R.W.C.
REMAINDER OF A CALLED 32.55 AC.
AS DESCRIBED IN
VOL. 2643, PG. 873
O.R.W.C.

3/4"

H.W.F.

"5781"

0.43'

SALVADOR H. MARTINEZ
CALLED 7.017 AC.
DOC. NO. 2009010475
O.P.R.W.C.

328.57'
METAL FENCE

(N 07°59'31" E 2,138.08')
N 07°55'35" E 2,152.98'

0.25'

LARRY J. &
MARVEL L. HAGOOD
CALLED 12.40 AC.
DOC. NO. 1996052030
O.P.R.W.C.

610.16'

PIPELINE SIGN NGL
PIPELINE SIGN PETROLEUM
PIPELINE SIGN NATURAL GAS
PIPELINE SIGN CRUDE OIL

10n APPROXIMATE LOCATION
30' PIPELINE EASEMENT
DOC. NO. 2015079038
O.P.R.W.C.

N 07°55'41" E 5,438.53'

S 07°55'26" W 4,400.34'
[S 07°55'25" W 4,399.89']

PAUL J. DROSCHE
CALLED 15.00 AC.
VOL. 2643, PG. 883
O.R.W.C.

10n APPROXIMATE LOCATION
50' PIPELINE EASEMENT
DOC. NO. 2015100565
O.P.R.W.C.

10g APPROXIMATE LOCATION
30' PIPELINE EASEMENT
DOC. NO. 2015090545
O.P.R.W.C.

[542.42']
542.45'

SEE DETAIL "B"

((26.73'))
26.87'

SEE DETAIL "A"

BRIEANNA MONIQUE FERNANDEZ
CALLED 2.100 AC.
DOC. NO. 20211147578
O.P.R.W.C.

N 83°21'15" W 830.88'
(N 82°13'17" W 830.23')

10h APPROXIMATE LOCATION
50' PIPELINE EASEMENT
DOC. NO. 2016072554
O.P.R.W.C.

PIPELINE SIGN NATURAL GAS
PIPELINE SIGN CRUDE OIL

B.W.F.

GABRIEL M. & MIRNA ESPINO
CALLED 7.100 AC.
DOC. NO. 2018067702
O.P.R.W.C.

GABRIEL M. & MIRNA ESPINO
CALLED 3.888 AC.-TRACT 2
DOC. NO. 2018067712
O.P.R.W.C.

2.46'

GABRIEL M. & MIRNA ESPINO
CALLED 9.996 AC.-TRACT 1
DOC. NO. 2018067712
O.P.R.W.C.

(N 07°49'27" E 1,329.44')
N 07°57'02" E 1,331.28'
959.72'

MARK S. KRUEGER
CALLED 63.6 AC.
VOL. 2551, PG. 599
O.R.W.C.

APPROXIMATE SURVEY LINE

DETAIL "A"
NOT TO SCALE

N 83°21'15" E 830.88'

S 65°55'58" W 3.34'

"AS"

N 07°57'02" E 1,331.28'

BIGSKY CAPITAL LTD ET AL
CALLED 107.22 AC.
DOC. NO. 2021191286
O.P.R.W.C.

"AS"

N 82°41'41" W 346.39'
(N 82°42'33" W 346.39')

N 83°05'09" W 816.58'
[N 83°04'42" W 816.42']

"RJ"

BIGSKY CAPITAL LTD ET AL
CALLED 107.22 AC.
DOC. NO. 2021191286
O.P.R.W.C.

APPROXIMATE SURVEY LINE

METES AND BOUNDS DESCRIPTION

FIELD NOTES FOR A 389.542 ACRE TRACT OF LAND OUT OF THE JOHN KUYKENDALL SURVEY, ABSTRACT NO. 378 AND THE MASSILLON FARLEY SURVEY, ABSTRACT NO. 238, WILLIAMSON COUNTY, TEXAS; BEING ALL OF A CALLED 194.88 ACRE TRACT OF LAND AS CONVEYED TO M. MOORE FAMILY FARMS, LLC, A TEXAS LIMITED LIABILITY COMPANY, BY GENERAL WARRANTY DEED RECORDED IN DOCUMENT NUMBER 2018105369 OF THE OFFICIAL PUBLIC RECORDS OF WILLIAMSON COUNTY, TEXAS, AND ALL OF A CALLED 194.58 ACRE TRACT OF LAND AS CONVEYED TO M. MOORE FAMILY FARMS, LLC, A TEXAS LIMITED LIABILITY COMPANY, BY GENERAL WARRANTY DEED RECORDED IN DOCUMENT NUMBER 2018097245 OF THE OFFICIAL PUBLIC RECORDS OF WILLIAMSON COUNTY, TEXAS; SAID 389.542 ACRE TRACT OF LAND BEING MORE PARTICULARLY DESCRIBED BY METES AND BOUNDS AS FOLLOWS:

BEGINNING at a chiseled "X" in concrete found on the south right-of-way line of County Road 132 (variable width right-of-way) at the northeast corner of a called 84.5145-acre tract of land as conveyed to Doyle E. Hobbs, Jr. by Correction Deed of Partition recorded in Volume 2189, Page 889 of the Official Records of Williamson County, Texas, at the northwest corner of the above described M. Moore Family Farms 194.88-acre tract, for the northwest corner and POINT OF BEGINNING of the herein described tract;

THENCE, with the south right-of-way line of said County Road 132 and north line of said M. Moore Family Farms 194.88-acre tract, S 82°45'42"E a distance of 1,227.06 feet to a 1/2-inch iron rod with cap stamped "RJ SURVEYING" found at the northeast corner of said M. Moore Family Farms 194.88-acre tract, at the northwest corner of the above described M. Moore Family Farms 194.58-acre tract, for an angle point on the north line of the herein described tract, from which a 1/2-inch iron rod with cap stamped "MBC ENGINEERS" found on the east line of said M. Moore Family Farms 194.88-acre tract and the west line of said M. Moore Family Farms 194.58-acre tract, bears S 07°55'28"W a distance of 2,509.50 feet;
THENCE, continuing with the south right-of-way line of said County Road 132 and with the north line of said M. Moore Family Farms 194.58-acre tract, S 82°30'03"E a distance of 898.10 feet to a 1/2-inch iron rod with cap stamped "MBC ENGINEERS" found at the northeast corner of said M. Moore Family Farms 194.58-acre tract, at the northwest corner of a called 41.2-acre tract of land as conveyed to Cynthia Krueger by Executor's Deed recorded in Document Number 2015046325 of the Official Public Records of Williamson County, Texas, for the northeast corner of the herein described tract, from which a 3/4-inch pipe found on the south right-of-way line of said County Road 132, at the northeast corner of said Cynthia Krueger 41.2-acre tract, at the northwest corner of a called 36.13-acre tract of land as conveyed to Morris Wayne Krueger and Michael Ray Krueger by Deed of Gift recorded in Volume 656, Page 142 of the Official Records of Williamson County, Texas, bears S 82°28'37"E a distance of 942.94 feet;

THENCE, leaving the south right-of-way line of said County Road 132, with the east line of said M. Moore Family Farms 194.58-acre tract, S 07°55'23"W a distance of 1,924.48 feet to a 1/2-inch iron rod with cap stamped "RJ SURVEYING" found at an interior corner of said M. Moore Family Farms 194.58-acre tract, at the southwest corner of said Cynthia Krueger 41.2-acre tract, for an interior corner on the east line of the herein described tract;

THENCE, with a north line of said M. Moore Family Farms 194.58-acre tract, S 82°03'08"E a distance of 943.55 feet to a 1/2-inch iron rod with cap stamped "RJ SURVEYING" found on the west line of said Morris Wayne Krueger and Michael Ray Krueger 36.13-acre tract, at the southeast corner of said Cynthia Krueger 41.2-acre tract, at an exterior corner of said M. Moore Family Farms 194.58-acre tract, for an exterior corner on the east line of the herein described tract;

THENCE, with the east line of said M. Moore Family Farms 194.58-acre tract, S 07°55'58"W a distance of 1,716.50 feet to a 1/2-inch iron rod with cap stamped "RJ SURVEYING" found on the west line of a called 150.69-acre tract of land as conveyed to Morris Wayne Krueger and Michael Ray Krueger by Warranty Deed with Vendor's Lien recorded in Volume 1066, Page 457 of the Official Records of Williamson County, Texas, at an exterior corner of said M. Moore Family Farms 194.58-acre tract, at the northeast corner of a called 50.00-acre tract of land described in Volume 1993, Page 161 of the Official Records of Williamson County, Texas, as conveyed to William Thompson et al. by Warranty Deed recorded in Document Number 2006032228 of the Official Public Records of Williamson County, Texas, for an exterior corner on the east line of the herein described tract;

THENCE, with a south line of said M. Moore Family Farms 194.58-acre tract, N 82°04'58"W a distance of 1,025.09 feet to a 1/2-inch iron rod with cap "MBC ENGINEERS" found at an interior corner of said M. Moore Family Farms 194.58-acre tract, at the northwest corner of said James L. Jarvis 50.00-acre tract, for an interior corner on the east line of the herein described tract;

THENCE, with the east line of said M. Moore Family Farms 194.58-acre tract, S 07°55'26"W a distance of 4,400.34 feet to a 1/2-inch iron rod with cap stamped "RJ SURVEYING" found on the west line of a called 63.6 acre tract of land as conveyed to Mark S. Krueger by Quitclaim Deed recorded in Volume 2551, Page 599 of the Official Records of Williamson County, Texas, at the southeast corner of said M. Moore Family Farms 194.58-acre tract, at the northeast corner of a called 107.22-acre tract of land as conveyed to BigSky Capital Ltd. et al., by Special Warranty Deed recorded in Document Number 2021191286 of the Official Public Records of Williamson County, Texas, for the southeast corner of the herein described tract;

THENCE, with the south line of said M. Moore Family Farms 194.58-acre tract and the north line of said BigSky Capital 107.22-acre tract, N 83°05'09"W a distance of 816.58 feet to a 1/2-inch iron rod found at the southwest corner of said M. Moore Family Farms 194.58-acre tract, at the southeast corner of said M. Moore Family Farms 194.88-acre tract, for an angle point on the south line of the herein described tract, from which a 1/2-inch iron rod with cap stamped "RJ SURVEYING" found on the west line of said M. Moore Family Farms 194.58-acre tract and the east line of said M. Moore Family Farms 194.88-acre tract, bears N 07°55'41"E a distance of 5,438.53 feet;

THENCE, continuing with the north line of said BigSky Capital 107.22-acre tract and the south line of said M. Moore Family Farms 194.88-acre tract, N 82°41'41"W a distance of 346.39 feet to a 1/2-inch iron rod with cap stamped "ALLSTAR 5729" found at the most southerly southwest corner of said M. Moore Family Farms 194.88-acre tract, at an interior corner of said BigSky Capital 107.22-acre tract, for the most southerly southwest corner of the herein described tract;

THENCE, with the west line of said M. Moore Family Farms 194.88-acre tract, N 07°57'02"E, pass a 1/2-inch iron rod found 2.46 feet left at a distance of 959.72 feet, and continuing on for a total distance of 1,331.28 feet to a 1/2-inch iron rod found at an interior corner of said M. Moore Family Farms 194.88-acre tract, at the northeast corner of a called 7.100-acre tract of land as conveyed to Gabriel M. and Mirna Espino by Warranty Deed with Vendor's Lien recorded in Document Number 2018067702 of the Official Public Records of Williamson County, Texas, for an interior corner on the west line of the herein described tract, from which a 1/2-inch iron rod with cap stamped "ALLSTAR 5729" bears S 65°55'58"W a distance of 3.34 feet;

THENCE, with a south line of said M. Moore Family Farms 194.88-acre tract and the north line of said Espino 7.100-acre tract, N 83°21'15"W a distance of 830.88 feet to a 1/2-inch iron rod found at an exterior corner of said M. Moore Family Farms 194.88-acre tract, at an angle point on the east line of a called 2.100-acre tract of land as conveyed to Brieanna Monique Fernandez by Special Warranty Deed recorded in Document Number 20211147578 of the Official Public Records of Williamson County, Texas, at the northwest corner of the remainder of a called 3.888-acre tract of land as conveyed to Gabriel M. and Mirna Espino by General Warranty Deed recorded in Document Number 2018067712 of the Official Public Records of Williamson County, Texas, for an exterior corner on the west line of the herein described tract, from which a 1/2-inch iron rod with cap stamped "ALLSTAR 5729" bears N 01°57'48"W a distance 14.77 feet;

THENCE, with the west line of said M. Moore Family Farms 194.88-acre tract and the east line of said Fernandez 2.100-acre tract, N 07°55'35"E, pass a 1/2-inch iron rod found at the northeast corner of said Fernandez 2.100-acre tract and the southeast corner of a called 15.00 acre tract as conveyed to Paul J. Drosche by Correction Warranty Deed recorded in Volume 2643, Page 883 of the Official Records of Williamson County, Texas, at a distance of 26.87 feet, pass a 1/2-inch iron rod found at the northeast corner of said Drosche 15.00-acre tract and the southeast corner of a called 12.40 acre tract as conveyed to Larry J. & Marvel L. Hagood by Correction Warranty Deed recorded in Document Number 1996052030 of the Official Public Records of Williamson County, Texas, at a distance of 569.32 feet, pass a 1/2-inch iron rod found 0.25 feet to the left at a distance of 1,179.48 feet, pass a 1/2-inch iron rod with cap stamped "RPLS 5781" found 0.43 feet to the left at a distance of 1,509.05 feet, and continuing on for a total distance of 2,152.98 feet to a 3/4-inch iron rod found at the northeast corner of a called 15.427-acre tract of land as conveyed to Mary Dolores Garlick by Special Warranty Deed recorded in Document Number 2008040228 of the Official Public Records of Williamson County, Texas, and the southeast corner of a called 84.5145-acre tract of land as conveyed to Stormi L. Hobbs by Deed of Partition recorded in Volume 2189, Page 889 of the Official Records of Williamson County, Texas, for an angle point on the west line of the herein described tract;

THENCE, continuing with the west line of said M. Moore Family Farms 194.88-acre tract, N 07°17'27"E a distance of 4,573.18 feet to the POINT OF BEGINNING and containing 389.542 acres of land, more or less.

RESTRICTIVE COVENANT AND EASEMENT NOTES

10d. SUBJECT TO ANY AND ALL RIGHTS AND PRIVILEGES EXISTING OR WHICH MAY LATER EXIST BY VIRTUE OF THAT PORTION OF THE PROPERTY BEING USED AS A CEMETERY; INCLUDING, BUT NOT LIMITED TO, THE RIGHTS TO SEPULCHER AND INTERMENT AND TO THE RIGHTS OF INGRESS AND EGRESS IN AND TO THE SAID CEMETERY; AS DISCLOSED BY DEED DATED SEPTEMBER 24, 1902, RECORDED IN VOLUME 102, PAGE 307, DEED RECORDS OF WILLIAMSON COUNTY, TEXAS, DOES AFFECT THE SUBJECT TRACT 1, AS SHOWN HEREON

10e. PIPELINE EASEMENT DATED FEBRUARY 11, 1981, GRANTED TO SEMINOLE PIPELINE COMPANY, RECORDED IN VOLUME 828, PAGE 128, DEED RECORDS OF WILLIAMSON COUNTY, TEXAS, AS AFFECTED BY ASSIGNMENT RECORDED IN VOLUME 848, PAGE 291, DEED RECORDS OF WILLIAMSON COUNTY, TEXAS, DOES AFFECT THE SUBJECT TRACT 1. NOT PLOTTABLE.

10f. ALL RIGHTS, TERMS, CONDITIONS AND STIPULATIONS CONTAINED IN THAT CERTAIN TEMPORARY WORK SPACE AGREEMENT DATED MAY 21, 1992, EVIDENCED IN SUBORDINATION OF LIEN TO A GRANT OF EASEMENT AND TEMPORARY WORK SPACE, EXECUTED BY DONALD T. WALLIN, GARY I. WALLIN AND GERARD T. WALLIN, IN FAVOR OF SEMINOLE PIPELINE COMPANY, RECORDED IN VOLUME 2220, PAGE 803, OFFICIAL RECORDS OF WILLIAMSON COUNTY, TEXAS, DO AFFECT THE SUBJECT TRACT 1. NOT PLOTTABLE.

10g. EASEMENT AGREEMENT EXECUTED BY LPL-PTM LAND, LLC GRANTED TO SEMINOLE PIPELINE COMPANY, LLC FOR THE PURPOSE OF A PIPELINE EASEMENT, RECORDED UNDER DOCUMENT NO. 2015090545, OFFICIAL PUBLIC RECORDS OF WILLIAMSON COUNTY, TEXAS, DOES AFFECT THE SUBJECT TRACT 1, AS SHOWN HEREON.

10h. PERMANENT EASEMENT AGREEMENT EXECUTED BY LPL-PTM LAND, LLC, GRANTED TO ENTERPRISE CRUDE PIPELINE, LLC, FOR THE PURPOSE OF A PIPELINE EASEMENT, RECORDED UNDER DOCUMENT NO. 2016072554, OFFICIAL PUBLIC RECORDS OF WILLIAMSON COUNTY, TEXAS, DOES AFFECT THE SUBJECT TRACT 1, AS SHOWN HEREON.

10i. AN INGRESS AND EGRESS EASEMENT AND RIGHT-OF-WAY TO AND FROM WATER WELL, RECORDED IN VOLUME 232, PAGE 91, AND VOLUME 259, PAGE 176, DEED RECORDS, WILLIAMSON COUNTY, TEXAS, DOES AFFECT THE SUBJECT TRACT 2. NOT PLOTTABLE.

10j. AN ELECTRIC TRANSMISSION AND/OR DISTRIBUTION LINE EASEMENT GRANTED TO TEXAS POWER & LIGHT COMPANY, RECORDED IN VOLUME 286, PAGE 351, DEED RECORDS, WILLIAMSON COUNTY, TEXAS, MAY AFFECT THE SUBJECT TRACTS. NOT PLOTTABLE.

10k. A PIPELINE EASEMENT AND RIGHT-OF-WAY GRANTED TO JONAH WATER SUPPLY CORP., RECORDED IN VOLUME 597, PAGE 991, DEED RECORDS, WILLIAMSON COUNTY, TEXAS, DOES AFFECT THE SUBJECT TRACT 2. NOT PLOTTABLE.

10l. A PIPELINE EASEMENT AND RIGHT-OF-WAY GRANTED TO JONAH WATER SUPPLY CORP., RECORDED IN VOLUME 598, PAGE 8, DEED RECORDS, WILLIAMSON COUNTY, TEXAS, DOES AFFECT THE SUBJECT TRACT 2. NOT PLOTTABLE.

10m. A PIPELINE EASEMENT GRANTED TO SEMINOLE PIPELINE COMPANY, RECORDED IN VOLUME 830, PAGE 364, DEED RECORDS, WILLIAMSON COUNTY, TEXAS, AND BEING FURTHER AFFECTED BY THAT CERTAIN SUPPLEMENTAL PIPELINE RIGHT- OF-WAY AGREEMENT, RECORDED IN VOLUME 2174, PAGE 461, OFFICIAL RECORDS, WILLIAMSON COUNTY, TEXAS, DOES AFFECT THE SUBJECT TRACT 2. NOT PLOTTABLE.

10n. EASEMENT AGREEMENT GRANTED TO SEMINOLE PIPELINE COMPANY, LLC, RECORDED UNDER DOCUMENT NO. 2015079038, OFFICIAL PUBLIC RECORDS, WILLIAMSON COUNTY, TEXAS, DOES AFFECT THE SUBJECT TRACT 2, AS SHOWN HEREON.

10o. PERMANENT EASEMENT AGREEMENT GRANTED TO ENTERPRISE CRUDE PIPELINE, LLC, RECORDED UNDER DOCUMENT NO. 2015100565, OFFICIAL PUBLIC RECORDS, WILLIAMSON COUNTY, TEXAS, DOES AFFECT THE SUBJECT TRACT 2, AS SHOWN HEREON.

10p. MATTERS CONTAINED IN THAT CERTAIN CITY OF HUTTO RESOLUTION, DATED AUGUST 2, 1982, RECORDED IN VOLUME 885, PAGE 64, DEED RECORDS, WILLIAMSON COUNTY, TEXAS, WHICH PROVIDES FOR, AMONG OTHER THINGS, A RESOLUTION ACCEPTING PROPERTY IN THE EXTRATERRITORIAL JURISDICTION OF THE CITY OF HUTTO, DO AFFECT THE SUBJECT TRACT 2. NOT PLOTTABLE.

10t. POSSIBLE GRAVE PER DOCUMENT NUMBER 2015046325 OF THE OFFICIAL PUBLIC RECORDS OF WILLIAMSON COUNTY, TEXAS, DOES NOT AFFECT THE SUBJECT TRACT.

GENERAL NOTES

1. BEARING ORIENTATION IS BASED ON THE TEXAS STATE PLANE COORDINATE SYSTEM, CENTRAL ZONE 4203, NAD83. COMBINED SCALE FACTOR = 0.99988895.
2. THE PROPERTY LIES IN UNSHADED ZONE "X" (AREAS DETERMINED TO BE OUTSIDE THE 0.2% ANNUAL CHANCE FLOODPLAIN) AS DELINEATED ON THE FLOOD INSURANCE RATE MAPS FOR WILLIAMSON COUNTY, TEXAS, MAP NUMBER 48491C0520F, REVISED DECEMBER 20, 2019.
3. THIS SURVEY WAS MADE IN RELIANCE UPON THAT CERTAIN COMMITMENT FOR TITLE INSURANCE ISSUED BY FIDELITY NATIONAL TITLE INSURANCE COMPANY, AND COUNTERSIGNED BY CAPSTONE TITLE UNDER FILE NO. 20211281, DATED EFFECTIVE FEBRUARY 07, 2022, AND ISSUED FEBRUARY 28, 2022.
4. NO EVIDENCE OF RECENT EARTH MOVING WORK, BUILDING CONSTRUCTION, OR BUILDING ADDITIONS WAS OBSERVED AT TIME OF SURVEY.
5. NO EVIDENCE OF RECENT STREET OR SIDEWALK CONSTRUCTION OR REPAIRS WAS OBSERVED AT TIME OF SURVEY. THE SURVEYOR HAS NO KNOWLEDGE OF ANY PROPOSED CHANGES IN STREET RIGHT OF WAY LINES.

LEGEND

B.W.F.	BARBED WIRE FENCE
CMP	CORRUGATED METAL PIPE
CONC.	CONCRETE
D.R.W.C.	DEED RECORDS OF WILLIAMSON COUNTY
FND.	FOUND
G.P.	GATE POST
G.R.	GUARD RAIL
H.W.F.	HOG WIRE FENCE
O.P.R.W.C.	OFFICIAL PUBLIC RECORDS OF WILLIAMSON COUNTY
O.P.W.C.	OFFICIAL RECORDS OF WILLIAMSON COUNTY
P.P.	POWER POLE
P.L.M.	PIPELINE MARKER
R.O.W.	RIGHT-OF-WAY
R.P.	REFLECTOR POST
V.P.	VERTICAL PIPE
W.W.	WATER WELL
( )	RECORD INFO. FOR DOCUMENT NO. 2018105369 O.P.R.W.C.
[ ]	RECORD INFO. FOR DOCUMENT NO. 2018097245 O.P.R.W.C.
(( ))	RECORD INFO. FOR DOCUMENT NO. 2021147578 O.P.R.W.C.
{ }	RECORD INFO. FOR VOLUME 2643, PAGE 883 O.R.W.C.
●	FOUND 1/2" IRON ROD (UNLESS OTHERWISE NOTED)
●"RJ"	FOUND 1/2" IRON ROD W/CAP "RJ SURVEYING"
●"MBC"	FOUND 1/2" IRON ROD W/CAP "MBC ENGINEERING"
●"AS"	FOUND 1/2" IRON ROD W/CAP "ALLSTAR 5729"
●"5781"	FOUND 1/2" IRON ROD W/CAP "RPLS 5781"
⊙	FOUND 3/4" IRON PIPE
✖	FOUND "X" IN CONCRETE
———	EDGE OF ASPHALT
——OHT——	OVERHEAD TELEPHONE
——OHP——	OVERHEAD ELECTRIC
——X——	WIRE FENCE
——//——	BOARD FENCE
——o——	CHAIN LINK FENCE
10x.	SCHEDULE B ITEM NO.

To WMV Hutto 390 DE, LLC, ACORE Capital Mortgage, LP, a Delaware limited partnership, int its capacity as Administrative Agent for the Lenders, Fidelity National Title Insurance Company and Capstone Title:

This is to certify that this map or plat and the survey on which it is based were made in accordance with the 2021 Minimum Standard Detail Requirements for ALTA/NSPS Land Title Surveys, jointly established and adopted by ALTA and NSPS, and includes Items Items 1-4, 7(a), 9, 13, 16, 17 and 19 of Table A thereof. The field work was completed on October 25, 2021.

Date of Plat or Map: February 11, 2022
Revised: March 3, 2022

JONATHAN O. NOBLES RPLS NO. 5777
BGE, INC.
7000 NORTH MOPAC, SUITE 330
AUSTIN, TEXAS 78731
TELEPHONE: (512) 879-0400

STATE OF TEXAS
REGISTERED
JONATHAN O. NOBLES
5777
PROFESSIONAL
LAND SURVEYOR

BGE, Inc.
101 West Louis Henna Blvd, Suite 400, Austin, TX 78728
Tel: 512-879-0400 • www.bgeinc.com
TBPELS Licensed Surveying Firm No. 10106502

Copyright 2022

ALTA/NSPS LAND TITLE SURVEY OF 389.542 ACRES OUT OF THE J. KUYKENDALL SURVEY, A-378 & AND THE M. FARLEY SURVEY, A-238 COUNTY ROAD 132, HUTTO WILLIAMSON COUNTY, TEXAS

PARTY CHIEF: C.T., J.C.		ISSUE DATE:	2/11/2022
TECHNICIAN:	M.G.	SCALE:	1"=300'
R.P.L.S.:	J.N.	JOB NUMBER:	9408-00
FIELD BOOK NAME:		86	
BASE FILE:	\\browngay.net\gfs\Regions\TXC\Projects\WayMaker\9408-00-Stromberg\SV\04_Finals\Drawings\9408-00 Stromberg ALTA		

SHEET 1 OF 1

EXHIBIT B - STROMBERG CONCEPT PLAN

SCENARIO 1

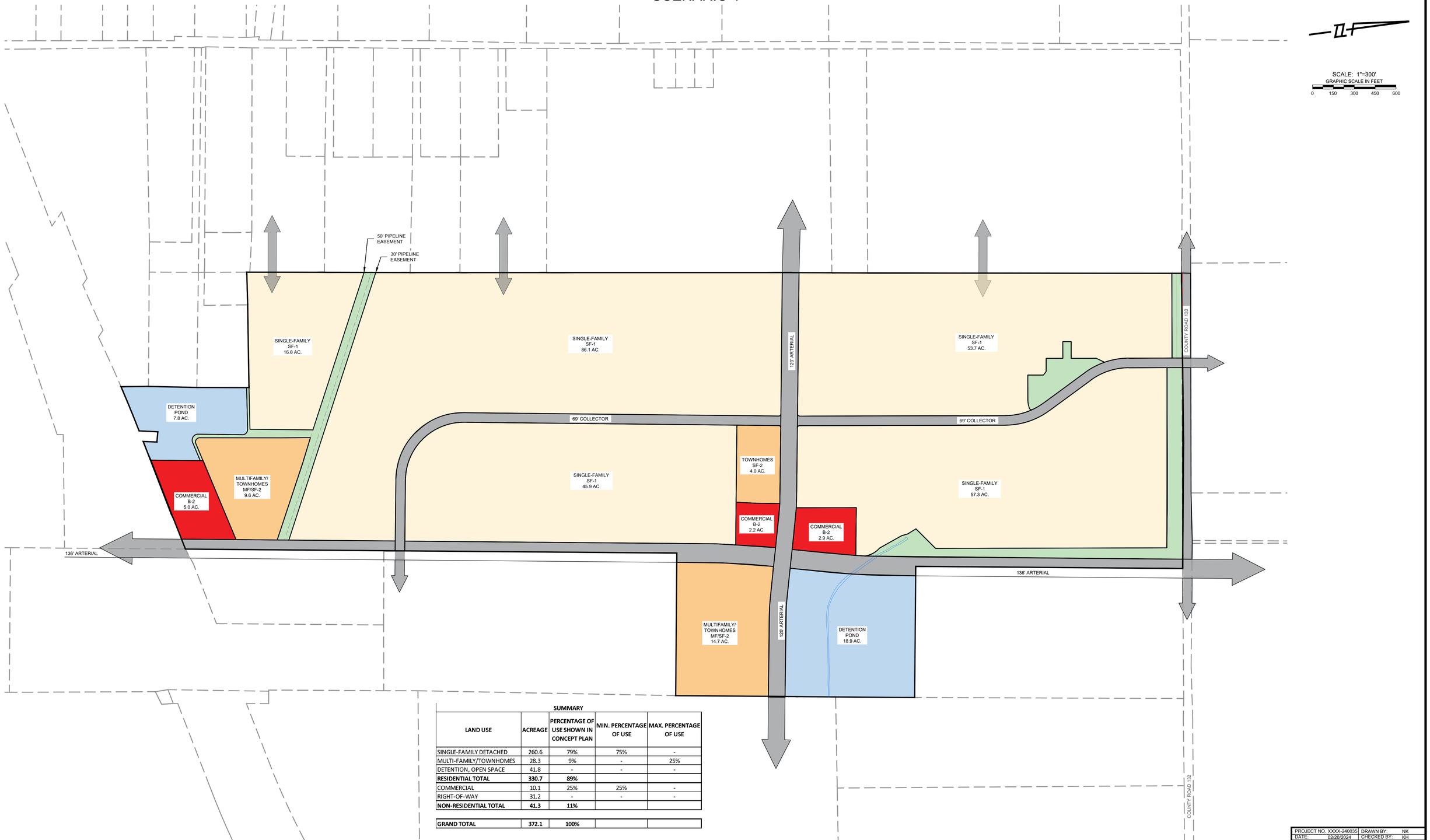

SUMMARY

LAND USE	ACREAGE	PERCENTAGE OF USE SHOWN IN CONCEPT PLAN	MIN. PERCENTAGE OF USE	MAX. PERCENTAGE OF USE
SINGLE-FAMILY DETACHED	260.6	79%	75%	-
MULTI-FAMILY/TOWNHOMES	28.3	9%	-	25%
DETENTION, OPEN SPACE	41.8	-	-	-
RESIDENTIAL TOTAL	**330.7**	**89%**		
COMMERCIAL	10.1	25%	25%	-
RIGHT-OF-WAY	31.2	-	-	-
NON-RESIDENTIAL TOTAL	**41.3**	**11%**		
GRAND TOTAL	**372.1**	**100%**		

THIS EXHIBIT IS A REPRESENTATIVE, NOT DEFINITIVE, EXAMPLE OF LAND USES COMPLIANT WITH THE STROMBERG PUD SCENARIO 1.

PROJECT NO. XXXX-240035	DRAWN BY: NK
DATE: 02/20/2024	CHECKED BY: KH

GRAY ENGINEERING
8834 N. Capital of Texas Hwy.
Suite 140
Austin, Texas 78759
(512)452-0371
FAX(512)454-9933
TBPELS FIRM #2946

EXHIBIT B - STROMBERG CONCEPT PLAN

SCENARIO 2

SCALE: 1"=300'
GRAPHIC SCALE IN FEET
0 150 300 450 600

50' PIPELINE EASEMENT
30' PIPELINE EASEMENT
SINGLE-FAMILY SF-1 79.3 AC.
TOWNHOMES SF-2 2.7 AC.
120' ARTERIAL
TRUCK COURT
BUILDING 1A 1,670,100 sf
2930'
185'
470'
COUNTY ROAD 132
DETENTION POND 8.7 AC.
COMMERCIAL B-2 4.8 AC.
69' COLLECTOR
TOWNHOMES SF-2 1.5 AC.
LIGHT INDUSTRIAL LI 157.1 AC.
BUILDING 3A 194,400 sf
BUILDING 3A 270,000 sf
1000'
270'
720'
185'
BUILDING 2A 540,640 sf
1232'
520'
COMMERCIAL B-2 3.4 AC.
MULTIFAMILY MF 17.3 AC.
SINGLE-FAMILY SF-1 29.9 AC.
COMMERCIAL B-1 2.5 AC.
136' ARTERIAL
MULTIFAMILY MF 14.6 AC.
TOWNHOMES SF-2 14.3 AC.

SUMMARY				
LAND USE	ACREAGE	PERCENTAGE OF USE SHOWN IN CONCEPT PLAN	MIN. PERCENTAGE OF USE	MAX. PERCENTAGE OF USE
SINGLE-FAMILY DETACHED	109.2	60%	75%	-
MULTI-FAMILY / TOWNHOMES	50.3	28%	-	25%
RIGHT-OF-WAY, OPEN SPACE	21.3	-	-	-
RESIDENTIAL TOTAL	**180.8**	**49%**		
NEIGHBORHOOD COMMERCIAL	5	3%	-	10%
GENERAL COMMERCIAL	8.2	4%	-	10%
LIGHT INDUSTRIAL	157.1	82%	80%	-
RIGHT-OF-WAY, OPEN SPACE	21.25	-	-	-
NON-RESIDENTIAL TOTAL	**191.6**	**51%**		
GRAND TOTAL	**372.3**	**100%**		

THIS EXHIBIT IS A REPRESENTATIVE, NOT DEFINITIVE, EXAMPLE OF LAND USES COMPLIANT WITH THE STROMBERG PUD SCENARIO 2.

PROJECT NO. 240035	DRAWN BY: KH
DATE: 05/24/2024	CHECKED BY:

GRAY ENGINEERING
8834 N. Capital of Texas Hwy.
Suite 140
Austin, Texas 78759
(512)452-0371
FAX(512)454-9933
TBPELS FIRM #2946

H:\PROJECTS\372 - JHV\MAKER VENTURES LLC\1 CITY\1 STROMBERG\ENTITLEMENTS\PLOTS\240035A STROMBERG PUD SUBMITTAL\BACKUP\240035 EXHIBIT CONCEPT PLAN_SCENARIO2.DWG, DATE: 5/10/2024 11:34:43 AM, BY: KHARRIS

EXHIBIT B - STROMBERG CONCEPT PLAN

SCENARIO 2

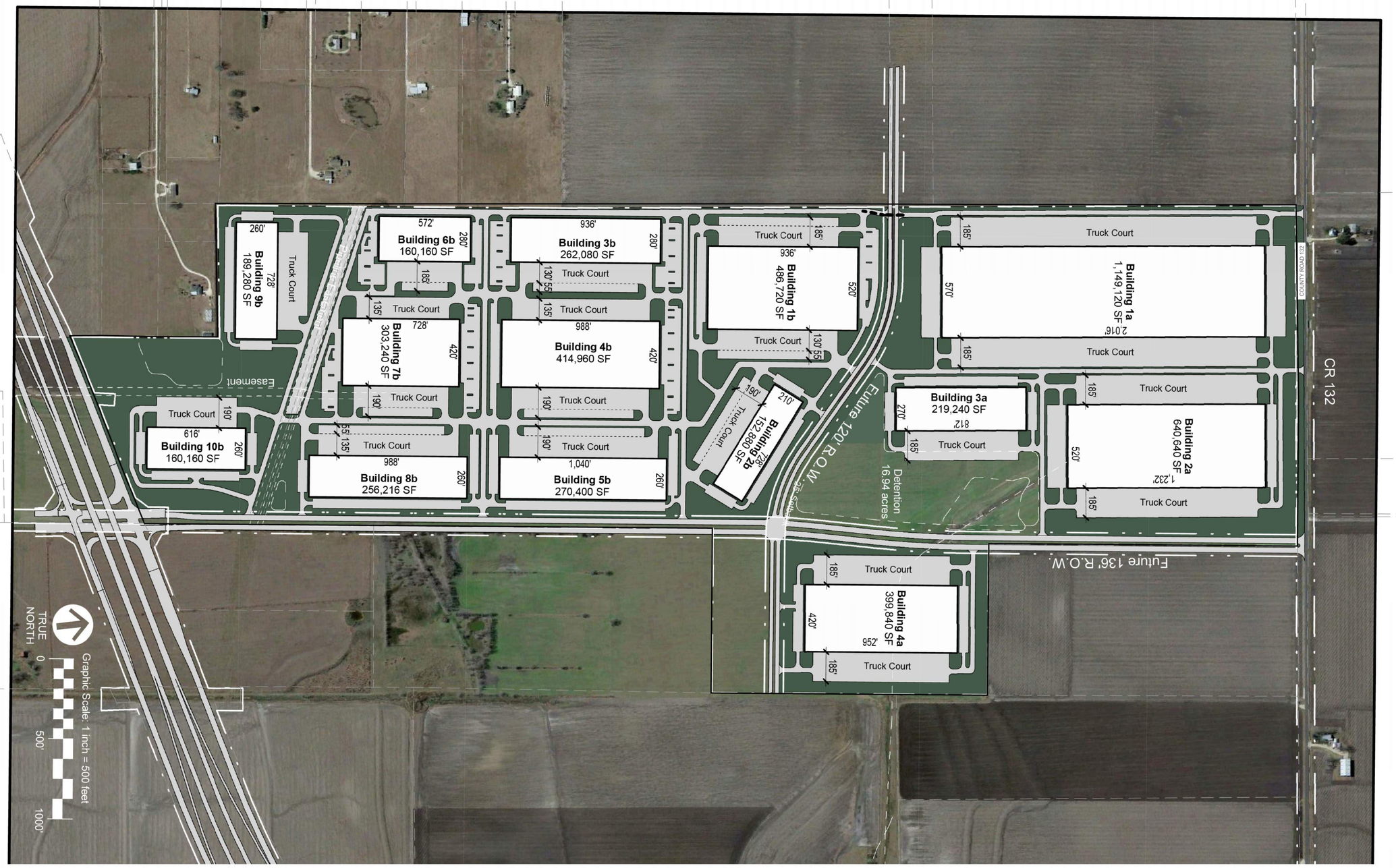

THIS EXHIBIT IS A REPRESENTATIVE, NOT DEFINITIVE, EXAMPLE OF LAND USES COMPLIANT WITH THE STROMBERG PUD SCENARIO 2.

PROJECT NO: 240035	DRAWN BY: KH
DATE: 03/25/2024	CHECKED BY:

GRAY ENGINEERING
8834 N. Capital of Texas Hwy.
Suite 140
Austin, Texas 78759
(512)452-0371
FAX(512)454-9933
TBPELS FIRM #2946

G:\PROPOSAL\2024\240035 - RAYMAKER VENTURES - STROMBERG\PLAN\240035 STROMBERG PUD SUBMITTAL\240035 EXHIBIT CONCEPT PLAN_SCENARIO2.DWG, DATE: 4/2/2024 11:05:09 AM, BY: KHARRIS

AGENDA ITEM REPORT
10.8.

To:	City Council
Subject:	Consideration and possible action on Resolution No. R-2026-180 approving a negotiated settlement between ATMOS Cities Steering Committee and Atmos Energy Corp., Mid-Tex Division. (David Amsler)
Meeting:	Thursday, September 3, 2026
Department:	City Manager /
Staff Contact:	David Amsler

ITEM SUMMARY:

The City, along with 181 other Mid-Texas cities served by Atmos Energy Corporation, Mid-Tex Division ("Atmos Mid-Tex" or "Company"), is a member of the Atmos Cities Steering Committee ("ACSC"). In 2007, ACSC and Atmos Mid-Tex settled a rate application filed by the Company pursuant to Section 104.301 of the Texas Utilities Code for an interim rate adjustment commonly referred to as a GRIP filing (arising out of the Gas Reliability Infrastructure Program legislation). That settlement created a substitute rate review process, referred to as Rate Review Mechanism ("RRM"), as a substitute for future filings under the GRIP statute.

Since 2007, there have been several modifications to the original RRM Tariff. The most recent iteration of an RRM Tariff was reflected in an ordinance adopted by ACSC members in 2018. On or about April 1, 2026, the Company filed a rate request pursuant to the RRM Tariff adopted by ACSC members. The Company claimed that its cost-of-service in a test year ending December 31, 2025, entitled it to additional system-wide revenues of $291.1 million.

Application of the standards set forth in ACSC's RRM Tariff reduces the Company's request to $273.6 million. After reviewing the filing and conducting discovery, ACSC's consultants concluded that the system-wide deficiency under the RRM regime should be $253.4 million instead of the claimed $291.1 million.

After several settlement meetings, the parties have agreed to settle the case for $260.5 million. This is a reduction of over $30 million to the Company's initial request. This includes payment of ACSC's expenses. The Effective Date for new rates is October 1, 2026. ACSC members should take action approving the Resolution/Ordinance before October 1, 2026.

RATE TARIFFS

Atmos generated rate tariffs attached to the Resolution/Ordinance that will generate $260.5 million in additional revenues. Atmos also prepared a Proof of Revenues supporting the settlement figures. ACSC consultants have agreed that Atmos' Proof of Revenues is accurate.

BILL IMPACT

The impact of the settlement on average residential rates is an increase of $13.37 on a monthly basis, or 14.15%. The increase for average commercial usage will be $44.82 or 9.90%. Atmos provided bill impact comparisons containing these figures.

SUMMARY OF ACSC'S OBJECTION TO THE UTILITIES CODE SECTION 104.301 GRIP PROCESS

ACSC strongly opposed the GRIP process because it constitutes piecemeal ratemaking by ignoring declining expenses and increasing revenues while rewarding the Company for increasing capital investment on an annual basis. The GRIP process does not allow any review of the reasonableness of capital investment and does not allow cities to participate in the Railroad Commission's review of annual GRIP filings or allow recovery of Cities' rate case expenses. The Railroad Commission undertakes a mere administrative review of GRIP filings (instead of a full hearing) and rate increases go into effect without any material adjustments. In ACSC's view, the GRIP process unfairly raises customers' rates without any regulatory oversight. In contrast, the RRM process has allowed for a more comprehensive rate review and annual evaluation of expenses and revenues, as well as capital investment.

RRM SAVINGS OVER GRIP

While residents outside municipal limits must pay rates governed by GRIP, there are some cities served by Atmos Mid-Tex that chose to remain under GRIP rather than adopt RRM. Additionally, the City of Dallas adopted a variation of RRM which is referred to as DARR. When new rates become effective on October 1, 2026, ACSC residents will maintain an economic monthly advantage over GRIP and will be comparable to DARR rates.

Comparison to Other Mid-Tex Rates (Residential)

Average Bill Compared to RRM Cities

RRM Cities: $66.18 -

DARR: $66.07 $0.11

ATM Cities: $67.02 ($0.84)

Environs: $66.07 $0.11

Note: ATM Cities and Environs rates are as-filed. Also note that DARR uses a test year ending in September rather than December.

EXPLANATION OF "BE IT RESOLVED" PARAGRAPHS:

1. This section approves all findings in the Resolution/Ordinance.

2. This section adopts the RRM rate tariffs and finds the adoption of the new rates to be just, reasonable, and in the public interest.

3. This section makes it clear that Cities may challenge future costs associated with gas leaks.

4. This section finds that existing rates are unreasonable. Such finding is a necessary predicate to establishment of new rates. The new tariffs will permit Atmos Mid-Tex to recover an additional $260.5 million on a system-wide basis.

5. This section approves an exhibit that establishes a benchmark for pensions and retiree medical benefits to be used in future rate cases or RRM filings.

6. This section requires the Company to reimburse the City for expenses associated with review of the RRM filing, settlement discussions, and adoption of the Resolution/Ordinance approving new rate tariffs.

7. This section repeals any resolution or ordinance that is inconsistent with the Resolution/Ordinance.

8. This section finds that the meeting was conducted in compliance with the Texas Open Meetings Act, Texas Government Code, Chapter 551.

9. This section is a savings clause, which provides that if any section is later found to be unconstitutional or invalid, that finding shall not affect, impair, or invalidate the remaining provisions of this Resolution/Ordinance. This section further directs that the remaining provisions of the Resolution/Ordinance are to be interpreted as if the offending section or clause never existed.

10. This section provides for an effective date upon passage.

11. This section directs that a copy of the signed Resolution/Ordinance be sent to a representative of the Company and legal counsel for ACSC.

The Legislature's GRIP process allowed gas utilities to receive annual rate increases associated with capital investments. The RRM process has proven to result in a more efficient and less costly (both from a consumer rate impact perspective and from a ratemaking perspective) than the GRIP process. Given Atmos Mid-Tex's claim that its historic cost of service should entitle it to recover $291.1 million in additional system-wide revenues, the RRM settlement at $260.5 million for ACSC members reflects substantial savings to ACSC cities. Settlement at $260.5 million is fair and reasonable. The ACSC Executive Committee consisting of city employees of 18 ACSC members urges all ACSC

members to pass the Resolution/Ordinance before October 1, 2026. New rates become effective October 1, 2026.

STAFF RECOMMENDATION:

Approve item as presented.

FISCAL NOTES:

There is no fiscal impact associated with this agenda item.

ATTACHMENTS:

1. HUTTO Tex 2026 RRM Settlement Resolution
2. HUTTO Attachment 1_CY25 MTX RRM - Tariffs
3. HUTTO Attachment 2_ CY25 MTX RRM - Pension Benchmark

RESOLUTION NO. R-2026-_____

A RESOLUTION OF THE CITY COUNCIL OF THE CITY OF HUTTO, WILLIAMSON COUNTY, TEXAS, APPROVING A NEGOTIATED SETTLEMENT BETWEEN THE ATMOS CITIES STEERING COMMITTEE ("ACSC") AND ATMOS ENERGY CORP., MID-TEX DIVISION REGARDING THE COMPANY'S 2026 RATE REVIEW MECHANISM FILING; DECLARING EXISTING RATES TO BE UNREASONABLE; ADOPTING TARIFFS THAT REFLECT RATE ADJUSTMENTS CONSISTENT WITH THE NEGOTIATED SETTLEMENT; FINDING THE RATES TO BE SET BY THE ATTACHED SETTLEMENT TARIFFS TO BE JUST AND REASONABLE AND IN THE PUBLIC INTEREST; APPROVING AN ATTACHMENT ESTABLISHING A BENCHMARK FOR PENSIONS AND RETIREE MEDICAL BENEFITS; REQUIRING THE COMPANY TO REIMBURSE ACSC'S REASONABLE RATEMAKING EXPENSES; DETERMINING THAT THIS RESOLUTION WAS PASSED IN ACCORDANCE WITH THE REQUIREMENTS OF THE TEXAS OPEN MEETINGS ACT; ADOPTING A SAVINGS CLAUSE; DECLARING AN EFFECTIVE DATE; AND REQUIRING DELIVERY OF THIS RESOLUTION TO THE COMPANY AND THE ACSC'S LEGAL COUNSEL.

WHEREAS, the City of Hutto, Williamson County, Texas ("City") is a gas utility customer of Atmos Energy Corp., Mid-Tex Division ("Atmos Mid-Tex" or "Company"), and a regulatory authority with an interest in the rates, charges, and services of Atmos Mid-Tex; and

WHEREAS, the City is a member of the Atmos Cities Steering Committee ("ACSC"), a coalition of similarly-situated cities served by Atmos Mid-Tex ("ACSC Cities") that have joined together to facilitate the review of, and response to, natural gas issues affecting rates charged in the Atmos Mid-Tex service area; and

WHEREAS, ACSC and the Company worked collaboratively to develop a Rate Review Mechanism ("RRM") tariff that allows for an expedited rate review process by ACSC Cities as a substitute to the Gas Reliability Infrastructure Program ("GRIP") process instituted by the Legislature, and that will establish rates for the ACSC Cities based on the system-wide cost of serving the Atmos Mid-Tex Division; and

WHEREAS, the current RRM tariff was adopted by the City in a rate ordinance in 2018; and

WHEREAS, on about April 1, 2026, Atmos Mid-Tex filed its 2026 RRM rate request with ACSC Cities based on a test year ending December 31, 2026; and

WHEREAS, ACSC coordinated its review of the Atmos Mid-Tex 2026 RRM filing through its Executive Committee, assisted by ACSC's attorneys and consultants, to resolve issues identified in the Company's RRM filing; and

WHEREAS, the Executive Committee, as well as ACSC's counsel and consultants, recommend that ACSC Cities approve an increase in base rates for Atmos Mid-Tex of $260.5 million on a system-wide basis with an Effective Date of October 1, 2026; and

WHEREAS, ACSC agrees that Atmos' plant-in-service is reasonable; and

WHEREAS, with the exception of approved plant-in-service, ACSC is not foreclosed from future reasonableness evaluation of costs associated with incidents related to gas leaks; and

WHEREAS, the attached tariffs **(Attachment 1)** implementing new rates are consistent with the recommendation of the ACSC Executive Committee, are agreed to by the Company, and are just, reasonable, and in the public interest; and

WHEREAS, the settlement agreement sets a new benchmark for pensions and retiree medical benefits **(Attachment 2);** and

WHEREAS, the RRM Tariff contemplates reimbursement of ACSC's reasonable expenses associated with RRM applications.

NOW, THEREFORE, BE IT RESOLVED BY THE CITY COUNCIL OF THE CITY OF HUTTO, WILLIAMSON COUNTY, TEXAS:

SECTION 1. That the findings set forth in this Resolution are hereby in all things approved.

SECTION 2. That, without prejudice to future litigation of any issue identified by ACSC, the City Council finds that the settled amount of an increase in revenues of $260.5 million on a system-wide basis represents a comprehensive settlement of gas utility rate issues affecting the rates, operations, and services offered by Atmos Mid-Tex within the municipal limits arising from Atmos Mid-Tex's 2026 RRM filing, is in the public interest, and is consistent with the City's authority under Section 103.001 of the Texas Utilities Code.

SECTION 3. That despite finding Atmos Mid-Tex's plant-in-service to be reasonable, ACSC is not foreclosed in future cases from evaluating the reasonableness of costs associated with incidents involving leaks of natural gas.

SECTION 4. That the existing rates for natural gas service provided by Atmos Mid-Tex are unreasonable. The new tariffs attached hereto and incorporated herein as **Attachment 1,** are just and reasonable, and are designed to allow Atmos Mid-Tex to recover annually an additional $260.5 million on a system-wide basis, over the amount allowed under currently approved rates. Such tariffs are hereby adopted.

SECTION 5. That the ratemaking treatment for pensions and retiree medical benefits in Atmos Mid-Tex's next RRM filing shall be as set forth on **Attachment 2,** attached hereto and incorporated herein.

SECTION 6. That Atmos Mid-Tex shall reimburse the reasonable ratemaking expenses of the ACSC in processing the Company's 2026 RRM filing.

SECTION 7. That to the extent any resolution or ordinance previously adopted by the Council is inconsistent with this Resolution, it is hereby repealed.

SECTION 8. That the meeting at which this Resolution was approved was in all things conducted in strict compliance with the Texas Open Meetings Act, Texas Government Code, Chapter 551.

SECTION 9. That if any one or more sections or clauses of this Resolution is adjudged to be unconstitutional or invalid, such judgment shall not affect, impair, or invalidate the remaining provisions of this Resolution, and the remaining provisions of the Resolution shall be interpreted as if the offending section or clause never existed.

SECTION 10. That consistent with the City Ordinance that established the RRM process, this Resolution shall become effective from and after its passage with rates authorized by attached tariffs to be effective for bills rendered on or after October 1, 2026.

SECTION 11. That a copy of this Resolution shall be sent to Atmos Mid-Tex, care of Chris Felan, Vice President of Rates and Regulatory Affairs Mid-Tex Division, Atmos Energy Corporation, 5420 LBJ Freeway, Suite 1862, Dallas, Texas 75240, and to Thomas Brocato, General Counsel to ACSC, at Lloyd Gosselink Rochelle & Townsend, P.C., 816 Congress Avenue, Suite 1900, Austin, Texas 78701.

DULY PASSED AND APPROVED by the City Council of the City of Hutto, Williamson County, Texas, by a vote of _____ to _____, on this the 3rd day of September, 2026.

_____
Mike Snyder, Mayor

ATTEST:

_____
Laura Hallmark, City Secretary

MID-TEX DIVISION
ATMOS ENERGY CORPORATION

RATE SCHEDULE:	**R – RESIDENTIAL SALES**	
APPLICABLE TO:	**ALL CUSTOMERS IN THE MID-TEX DIVISION UNDER THE RRM TARIFF**	
EFFECTIVE DATE:	**Bills Rendered on or after 10/01/2026**	

Application
Applicable to Residential Customers for all natural gas provided at one Point of Delivery and measured through one meter.

Type of Service
Where service of the type desired by Customer is not already available at the Point of Delivery, additional charges and special contract arrangements between Company and Customer may be required prior to service being furnished.

Monthly Rate
Customer's monthly bill will be calculated by adding the following Customer and Ccf charges to the amounts due under the riders listed below:

Charge	Amount
Customer Charge per Bill	$ 24.35 per month
Rider CEE Surcharge	$ 0.05 per month[1]
Total Customer Charge	$ 24.40 per month
Commodity Charge – All Ccf	$ 1.03839 per Ccf

Gas Cost Recovery: Plus an amount for gas costs and upstream transportation costs calculated in accordance with Part (a) and Part (b), respectively, of Rider GCR.

Weather Normalization Adjustment: Plus or Minus an amount for weather normalization calculated in accordance with Rider WNA.

Franchise Fee Adjustment: Plus an amount for franchise fees calculated in accordance with Rider FF. Rider FF is only applicable to customers inside the corporate limits of any incorporated municipality.

Tax Adjustment: Plus an amount for tax calculated in accordance with Rider TAX.

Surcharges: Plus an amount for surcharges calculated in accordance with the applicable rider(s).

Agreement
An Agreement for Gas Service may be required.

Notice
Service hereunder and the rates for services provided are subject to the orders of regulatory bodies having jurisdiction and to the Company's Tariff for Gas Service.

[1]Reference Rider CEE - Conservation and Energy Efficiency as approved in GUD 19196. Surcharge billing effective July 1, 2026.

MID-TEX DIVISION
ATMOS ENERGY CORPORATION

RATE SCHEDULE:	**C – COMMERCIAL SALES**	
APPLICABLE TO:	**ALL CUSTOMERS IN THE MID-TEX DIVISION UNDER THE RRM TARIFF**	
EFFECTIVE DATE:	**Bills Rendered on or after 10/01/2026**	

Application
Applicable to Commercial Customers for all natural gas provided at one Point of Delivery and measured through one meter and to Industrial Customers with an average annual usage of less than 30,000 Ccf.

Type of Service
Where service of the type desired by Customer is not already available at the Point of Delivery, additional charges and special contract arrangements between Company and Customer may be required prior to service being furnished.

Monthly Rate
Customer's monthly bill will be calculated by adding the following Customer and Ccf charges to the amounts due under the riders listed below:

Charge	Amount
Customer Charge per Bill	$ 115.50 per month
Rider CEE Surcharge	$ 0.00 per month[1]
Total Customer Charge	$ 115.50 per month
Commodity Charge – All Ccf	$ 0.27784 per Ccf

Gas Cost Recovery: Plus an amount for gas costs and upstream transportation costs calculated in accordance with Part (a) and Part (b), respectively, of Rider GCR.

Weather Normalization Adjustment: Plus or Minus an amount for weather normalization calculated in accordance with Rider WNA.

Franchise Fee Adjustment: Plus an amount for franchise fees calculated in accordance with Rider FF. Rider FF is only applicable to customers inside the corporate limits of any incorporated municipality.

Tax Adjustment: Plus an amount for tax calculated in accordance with Rider TAX.

Surcharges: Plus an amount for surcharges calculated in accordance with the applicable rider(s).

Agreement
An Agreement for Gas Service may be required.

Notice
Service hereunder and the rates for services provided are subject to the orders of regulatory bodies having jurisdiction and to the Company's Tariff for Gas Service.

Presumption of Plant Protection Level
For service under this Rate Schedule, plant protection volumes are presumed to be 10% of normal, regular, historical usage as reasonably calculated by the Company in its sole discretion. If a customer believes it needs to be modeled at an alternative plant protection volume, it should contact the company at mdtx-div-plantprotection@atmosenergy.com.

[1] Reference Rider CEE - Conservation and Energy Efficiency as approved in GUD 19196. Surcharge billing effective July 1, 2026.

MID-TEX DIVISION
ATMOS ENERGY CORPORATION

RATE SCHEDULE:	**I – INDUSTRIAL SALES**	
APPLICABLE TO:	**ALL CUSTOMERS IN THE MID-TEX DIVISION UNDER THE RRM TARIFF**	
EFFECTIVE DATE:	**Bills Rendered on or after 10/01/2026**	

Application
Applicable to Industrial Customers with a maximum daily usage (MDU) of less than 200 MMBtu per day for all natural gas provided at one Point of Delivery and measured through one meter. Service for Industrial Customers with an MDU equal to or greater than 200 MMBtu per day will be provided at Company's sole option and will require special contract arrangements between Company and Customer.

Type of Service
Where service of the type desired by Customer is not already available at the Point of Delivery, additional charges and special contract arrangements between Company and Customer may be required prior to service being furnished.

Monthly Rate
Customer's monthly bill will be calculated by adding the following Customer and MMBtu charges to the amounts due under the riders listed below:

Charge	Amount
Customer Charge per Meter	$ 2,304.50 per month
First 0 MMBtu to 1,500 MMBtu	$ 0.9582 per MMBtu
Next 3,500 MMBtu	$ 0.7018 per MMBtu
All MMBtu over 5,000 MMBtu	$ 0.1505 per MMBtu

Gas Cost Recovery: Plus an amount for gas costs and upstream transportation costs calculated in accordance with Part (a) and Part (b), respectively, of Rider GCR.

Franchise Fee Adjustment: Plus an amount for franchise fees calculated in accordance with Rider FF. Rider FF is only applicable to customers inside the corporate limits of any incorporated municipality.

Tax Adjustment: Plus an amount for tax calculated in accordance with Rider TAX.

Surcharges: Plus an amount for surcharges calculated in accordance with the applicable rider(s).

Curtailment Overpull Fee
Upon notification by Company of an event of curtailment or interruption of Customer's deliveries, Customer will, for each MMBtu delivered in excess of the stated level of curtailment or interruption, pay Company 200% of the midpoint price for the Katy point listed in *Platts Gas Daily* published for the applicable Gas Day in the table entitled "Daily Price Survey."

Replacement Index
In the event the "midpoint" or "common" price for the Katy point listed in *Platts Gas Daily* in the table entitled "Daily Price Survey" is no longer published, Company will calculate the applicable imbalance fees utilizing a daily price index recognized as authoritative by the natural gas industry and most closely approximating the applicable index.

MID-TEX DIVISION
ATMOS ENERGY CORPORATION

RATE SCHEDULE:	**I – INDUSTRIAL SALES**	
APPLICABLE TO:	**ALL CUSTOMERS IN THE MID-TEX DIVISION UNDER THE RRM TARIFF**	
EFFECTIVE DATE:	**Bills Rendered on or after 10/01/2026**	

Agreement
An Agreement for Gas Service may be required.

Notice
Service hereunder and the rates for services provided are subject to the orders of regulatory bodies having jurisdiction and to the Company's Tariff for Gas Service.

Special Conditions
In order to receive service under Rate I, Customer must have the type of meter required by Company. Customer must pay Company all costs associated with the acquisition and installation of the meter.

Presumption of Plant Protection Level
For service under this Rate Schedule, plant protection volumes are presumed to be 10% of normal, regular, historical usage as reasonably calculated by the Company in its sole discretion. If a customer believes it needs to be modeled at an alternative plant protection volume, it should contact the company at mdtx-div-plantprotection@atmosenergy.com.

MID-TEX DIVISION
ATMOS ENERGY CORPORATION

RATE SCHEDULE:	**T – TRANSPORTATION**	
APPLICABLE TO:	**ALL CUSTOMERS IN THE MID-TEX DIVISION UNDER THE RRM TARIFF**	
EFFECTIVE DATE:	**Bills Rendered on or after 10/01/2026**	

Application
Applicable, in the event that Company has entered into a Transportation Agreement, to a customer directly connected to the Atmos Energy Corp., Mid-Tex Division Distribution System (Customer) for the transportation of all natural gas supplied by Customer or Customer's agent at one Point of Delivery for use in Customer's facility.

This tariff is not available to customers with a maximum daily demand of 1,000 MMBtu or greater and a daily/annual load factor of 10% or less. Load factor is calculated as follows: annual usage / (maximum daily connected demand X 365). Load factors will be recalculated once each year to determine appropriate eligibility for Rate T.

Type of Service
Company's receipt and delivery of all gas quantities under the applicable Transportation Agreement will be on a wholly interruptible basis subject to the Terms and Conditions incorporated in the Transportation Agreement. If Customer is an Industrial Customer, then Customer may elect, at the reasonable discretion of Company, to contract for Plant Protection transportation quantities defined as the minimum natural gas required to prevent physical harm and/or protect critical safety to the plant facilities, plant personnel, or the public when such protection cannot be achieved through the use of an alternate fuel. Where service of the type desired by Customer is not already available at the Point of Delivery, additional charges and special contract arrangements between Company and Customer may be required prior to service being furnished.

Monthly Rate
Customer's bill will be calculated by adding the following Customer and MMBtu charges to the amounts and quantities due under the riders listed below:

Charge	Amount
Customer Charge per Meter	$ 2,304.50 per month
First 0 MMBtu to 1,500 MMBtu	$ 0.9582 per MMBtu
Next 3,500 MMBtu	$ 0.7018 per MMBtu
All MMBtu over 5,000 MMBtu	$ 0.1505 per MMBtu

Upstream Transportation Cost Recovery: Plus an amount for upstream transportation costs in accordance with Part (b) of Rider GCR.

Retention Adjustment: Plus a quantity of gas as calculated in accordance with Rider RA.

Franchise Fee Adjustment: Plus an amount for franchise fees calculated in accordance with Rider FF. Rider FF is only applicable to customers inside the corporate limits of any incorporated municipality.

Tax Adjustment: Plus an amount for tax calculated in accordance with Rider TAX.

Surcharges: Plus an amount for surcharges calculated in accordance with the applicable rider(s).

MID-TEX DIVISION
ATMOS ENERGY CORPORATION

RATE SCHEDULE:	**T – TRANSPORTATION**	
APPLICABLE TO:	**ALL CUSTOMERS IN THE MID-TEX DIVISION UNDER THE RRM TARIFF**	
EFFECTIVE DATE:	**Bills Rendered on or after 10/01/2026**	

Imbalance Fees
All fees charged to Customer under this Rate Schedule will be charged based on the quantities determined under the applicable Transportation Agreement and quantities will not be aggregated for any Customer with multiple Transportation Agreements for the purposes of such fees.

Monthly Imbalance Fees
Customer shall pay Company the greater of (i) $0.10 per MMBtu, or (ii) 150% of the difference per MMBtu between the highest and lowest "midpoint" price for the Katy point listed in *Platts Gas Daily* in the table entitled "Daily Price Survey" during such month, for the MMBtu of Customer's monthly Cumulative Imbalance, as defined in the applicable Transportation Agreement, at the end of each month that exceeds 10% of Customer's receipt quantities for the month.

Overpull Fee
Upon notification by Company of an event of interruption of Customer's deliveries, Customer will, for each MMBtu delivered in excess of the stated level of interruption, pay Company 200% of the midpoint price for the Katy point listed in *Platts Gas Daily* published for the applicable Gas Day in the table entitled "Daily Price Survey."

Replacement Index
In the event the "midpoint" or "common" price for the Katy point listed in *Platts Gas Daily* in the table entitled "Daily Price Survey" is no longer published, Company will calculate the applicable imbalance fees utilizing a daily price index recognized as authoritative by the natural gas industry and most closely approximating the applicable index.

Agreement
A transportation agreement is required.

Notice
Service hereunder and the rates for services provided are subject to the orders of regulatory bodies having jurisdiction and to the Company's Tariff for Gas Service.

Special Conditions
In order to receive service under Rate T, customer must have the type of meter required by Company. Customer must pay Company all costs associated with the acquisition and installation of the meter.

MID-TEX DIVISION
ATMOS ENERGY CORPORATION

RIDER:	**SUR – SURCHARGES**	
APPLICABLE TO:	**ALL CUSTOMERS IN THE MID-TEX DIVISION UNDER THE RRM TARIFF**	
EFFECTIVE DATE:	**Bills Rendered on or after 10/01/2026**	

Application

This Rider is applicable to customer classes in the incorporated areas under the RRM tariff as authorized by the state or any governmental entity, a municipality, or a regulatory authority pursuant to any statute, ordinance, order, rule, contract, or agreement.

Monthly Calculation

Surcharges will be calculated in accordance with the applicable statute, ordinance, order, rule, contract, or agreement.

FASB ASC 740-10 (Fin48) Refund

Applicable to Customers taking service under Rate Schedules R – Residential, C – Commercial, I – Industrial and T – Transportation.

To ensure that gas utility customers receive the benefit associated with the changes in the Company's Uncertain Tax Positions ("UTPs") arising from recognition of Texas Margin Tax returns.

The decrease shall be calculated as follows:

Beginning with implementation of rates from the negotiated RRM Tariff, and annually thereafter, the portion of UTP liabilities identified in Schedule FIN48-1.1 for the prior fiscal year shall be allocated based on the final class allocations of GUD No. 10170 as per the RRM Tariff, divided by the annual bill count to derive rates to be refunded through Rider SUR in the subsequent fiscal year. Each year's calculation will include a true-up (+ or -) due to account for over/under collections. Amounts identified in Schedule FIN48-1 shall be adjusted to reflect any audit adjustments received from the Texas Comptroller of Public Accounts.

No action on the part of the Regulatory Authority is required to give effect to the amount to be refunded to customers. However, any amount refunded to customers shall be fully subject to review for reasonableness and accuracy in the gas utility's next statement of intent proceeding with the Railroad Commission of Texas, and if applicable, the gas utility shall be required to reconcile any discrepancies.

The following refund as authorized in the most recent negotiated RRM Tariff shall be refunded to each Rate Schedules R – Residential, C – Commercial, I – Industrial and T – Transportation customer's monthly bill in each month for a 12-month period. The refund amount by month by Rate Schedule is shown in the table below:

Rate Schedules	Rate
Rate R – Residential Sales	$ (0.14)
Rate C – Commercial Sales	$ (0.49)
Rate I – Industrial Sales	$ (10.47)
Rate T – Transportation	$ (10.47)

MID-TEX DIVISION
ATMOS ENERGY CORPORATION

RIDER:	**SUR – SURCHARGES**	
APPLICABLE TO:	**ALL CUSTOMERS IN THE MID-TEX DIVISION UNDER THE RRM TARIFF**	
EFFECTIVE DATE:	**Bills Rendered on or after 10/01/2026**	

Unprotected Excess Deferred Income Tax Amortization

The allocated RRM Cities balance of the Unprotected portion of the Excess Deferred Income Taxes ("EDIT") remaining after implementation of rates at October 1, 2026 shall be applied to each Rate Schedules R – Residential, C – Commercial, I – Industrial and T – Transportation customer's monthly bill for a one-month period. The refund amount by Rate Schedule is shown in the table below:

Rate Schedules	Rate
Rate R – Residential Sales	$ (4.45)
Rate C – Commercial Sales	$ (14.80)
Rate I – Industrial Sales	$ (319.02)
Rate T – Transportation	$ (319.02)

Maximum Allowable Operating Pressure ("MAOP") Hydrostatic Testing Cost Recovery

The allocated RRM Cities balance of the MAOP Hydrostatic Testing Cost as of December 31, 2025 is to be recovered through a monthly rate. This monthly rate shall be applied to each Rate Schedules R – Residential, C – Commercial, I – Industrial and T – Transportation customer's monthly bill for approximately twelve (12) months or until all approved costs are recovered from the applicable customer classes. The monthly recovery rate by Rate Schedule is shown in the table below:

Rate Schedules	Rate
Rate R – Residential Sales	$ 0.30
Rate C – Commercial Sales	$ 0.98
Rate I – Industrial Sales	$ 21.17
Rate T – Transportation	$ 21.17

MID-TEX DIVISION
ATMOS ENERGY CORPORATION

RIDER:	**WNA – WEATHER NORMALIZATION ADJUSTMENT**	
APPLICABLE TO:	**ALL CUSTOMERS IN THE MID-TEX DIVISION UNDER THE RRM TARIFF**	
EFFECTIVE DATE:	**Bills Rendered on or after 10/01/2026**	

Provisions for Adjustment

The Commodity Charge per Ccf (100 cubic feet) for gas service set forth in any Rate Schedules utilized by the cities of the Mid-Tex Division service area for determining normalized winter period revenues shall be adjusted by an amount hereinafter described, which amount is referred to as the "Weather Normalization Adjustment." The Weather Normalization Adjustment shall apply to all temperature sensitive residential and commercial bills based on meters read during the revenue months of November through April. The five regional weather stations are Abilene, Austin, Dallas, Waco, and Wichita Falls.

Computation of Weather Normalization Adjustment

The Weather Normalization Adjustment Factor shall be computed to the nearest one-hundredth cent per Ccf by the following formula:

$$WNAF_i = R_i \frac{(HSF_i \times (NDD-ADD))}{(BL_i + (HSF_i \times ADD))}$$

Where

i = any particular Rate Schedule or billing classification within any such particular Rate Schedule that contains more than one billing classification

$WNAF_i$ = Weather Normalization Adjustment Factor for the ith rate schedule or classification expressed in cents per Ccf

R_i = Commodity Charge rate of temperature sensitive sales for the ith schedule or classification.

HSF_i = heat sensitive factor for the ith schedule or classification divided by the average bill count in that class

NDD = billing cycle normal heating degree days calculated as the simple ten-year average of actual heating degree days.

ADD = billing cycle actual heating degree days.

BI_i = base load sales for the ith schedule or classification divided by the average bill count in that class

The Weather Normalization Adjustment for the jth customer in ith rate schedule is computed as:

$WNA_i = WNAF_i \times q_{ij}$

Where q_{ij} is the relevant sales quantity for the jth customer in ith rate schedule.

MID-TEX DIVISION
ATMOS ENERGY CORPORATION

RIDER:	**WNA – WEATHER NORMALIZATION ADJUSTMENT**	
APPLICABLE TO:	**ALL CUSTOMERS IN THE MID-TEX DIVISION UNDER THE RRM TARIFF**	
EFFECTIVE DATE:	**Bills Rendered on or after 10/01/2026**	

Base Use/Heat Use Factors

	Residential		Commercial	
Weather Station	Base use Ccf	Heat use Ccf/HDD	Base use Ccf	Heat use Ccf/HDD
Abilene	9.78	0.1448	91.89	0.8018
Austin	9.07	0.1318	213.26	0.9418
Dallas	12.87	0.1937	192.49	1.1269
Waco	9.39	0.1261	159.17	0.8068
Wichita Falls	10.61	0.1364	133.65	0.6965

Weather Normalization Adjustment (WNA) Report

On or before June 1 of each year, the company posts on its website at www.atmosenergy.com/MTXtariffs, in Excel format, a *Weather Normalization Adjustment (WNA) Report* to show how the company calculated its WNAs factor during the preceding winter season. Additionally, on or before June 1 of each year, the company files one hard copy and an Excel version of the *WNA Report* with the Railroad Commission of Texas' Gas Services Division, addressed to the Director of that Division.

ATMOS ENERGY CORP., MID-TEX DIVISION
MID-TEX RATE REVIEW MECHANISM
PENSIONS AND RETIREE MEDICAL BENEFITS FOR CITIES APPROVAL
TEST YEAR ENDING DECEMBER 31, 2025

Line No.	Description	Shared Services		Mid-Tex Direct			Adjustment Total
		Pension Account Plan	Post-Employment Benefit Plan	Pension Account Plan	Post-Employment Benefit Plan	Supplemental Executive Benefit Plan	
	(a)	(b)	(c)	(d)	(e)	(f)	(g)
1	Proposed Benefits Benchmark - Fiscal Year 2026 Willis Towers Watson Report as adjusted (1) (2) (3)	$ 200,382	$ (490,197)	$ 951,536	$ (3,288,240)	$ 72,926	
2	Allocation Factor	46.66%	46.66%	87.00%	87.00%	100.00%	
3	Proposed Benefits Benchmark Costs Allocated to Mid-Tex (Ln 1 x Ln 2)	$ 93,490	$ (228,707)	$ 827,882	$ (2,860,928)	$ 72,926	
4	O&M and Capital Allocation Factor	100.00%	100.00%	100.00%	100.00%	100.00%	
5	Proposed Benefits Benchmark Costs to Approve (Ln 3 x Ln 4)	$ 93,490	$ (228,707)	$ 827,882	$ (2,860,928)	$ 72,926	$ (2,095,337)
6							
7	O&M Expense Factor (WP_F-2.3, Ln 2)	80.27%	80.27%	36.19%	36.19%	8.73%	
8							
9	Summary of Costs to Approve (1):						
10	Total Pension Account Plan	$ 75,047		$ 299,646			$ 374,693
11	Total Post-Employment Benefit Plan		$ (183,588)		$ (1,035,492)		(1,219,080)
12	Total Supplemental Executive Benefit Plan					$ 6,367	6,367
13	Total (Ln 10 + Ln 11 + Ln 12)	$ 75,047	$ (183,588)	$ 299,646	$ (1,035,492)	$ 6,367	$ (838,020)

City of Hutto

Minutes

City Council Special Meeting

Thursday, August 13, 2026 at 6:00 PM

City Council Chambers – 500 W. Live Oak Street

1. CALL SESSION TO ORDER – 6:00 PM

2. ROLL CALL

Members of Council present: Mayor Snyder, Mayor Pro Tem Porterfield, Councilmember Reynolds, Councilmember Thornton (remote), Councilmember Morris, and Councilmember King

Absent: Councilmember Zepeda

STAFF:

Staff members present: James Earp, City Manager; David Amsler, Assistant City Manager; Kristi Barnes, Community & Culture Officer; Alberta Barrett, Finance Director; Sara Cervantes, Executive Director of Community Services; Abby Fenton, Communications Manager; Laura Hallmark, City Secretary; Howard Koontz, Director of Development Services; Kate Moriarty, Executive Director of Administrative Services; Kristin Phillips, Library Director; David Reeves, IT Manager; Kristiana Spencer, Director of Human Resources; Jeffrey Yarbrough, Police Chief

3. PUBLIC COMMENT

There were no speakers.

4. OTHER BUSINESS

4.1. Consideration and possible action on Resolution No. R-2026-164 calling and setting a public hearing on September 3, 2026, at 7:00 PM and September 10, 2026, at 7:00 PM on the proposed tax rate for fiscal year 2026-2027 and determining the proposed tax rate to be included in the hearing notice; providing proper notice and meeting, and providing an effective date. (Alberta Barrett)

Alberta Barrett, Finance Director, provided information for this item including no new revenue rate of .397011 and voter approval rate of .428517.

Motion by Councilmember Morris, second by Mayor Pro Tem Porterfield, to set the proposed tax rate at the no new revenue rate of .397011. Motion passed 6:0.

DRAFT

Motion by Mayor Snyder, second by Mayor Pro Tem Porterfield, to set the public hearing for September 3, 2026 at 7:00 PM. Motion passed 6:0.

4.2. Consideration and possible action on Ordinance No. O-2026-037 calling a bond election to be held in the City of Hutto, Texas on November 3, 2026; making provision for the conduct of the election; and resolving other matters related to that election. (Legal)

David Amsler, Assistant City Manager, provided information for this item including the amount is above what was initially projected. Council discussion regarding cost savings identified by consultant – such as rooftop air conditioning units; adjacent road construction and associated costs.

Bart Fowler, bond counsel, provided additional information.

Motion by Mayor Snyder, second by Councilmember Morris, to approve the ordinance as presented with a cost of $48 million. Motion passed 6:0.

4.3. Consideration and possible action on Ordinance No. O-2026-038 amending the budget for FY 2026 for various expenditures of the City of Hutto's General Fund, Capital Replacement Fund and Utility Fund. (Alberta Barrett)

Ms. Barrett provided information for this item.

Motion by Mayor Snyder, second by Mayor Pro Tem Porterfield, to approve the item as presented. Motion passed 6:0.

4.4. Consideration and possible action on Resolution No. R-2026-165 approving a joint election agreement and contract for election services between Williamson County Elections Administrator and the City of Hutto for a special bond election to be held on November 3, 2026; and authorizing the City Manager to execute the contract. (Laura Hallmark)

Motion by Mayor Snyder, second by Mayor Pro Tem Porterfield, to approve as presented, with the change in Section 4 of the contract that City of Hutto will select the polling locations. Motion passed 6:0.

4.5. **Joint Meeting with Planning and Zoning Commission** - Call to Order – 6:36 PM

Rick Hudson, Chair	Joelle Dan
Tony Wertz, Vice-Chair (ABSENT)	Cory Hall (ABSENT)
Jose DeLaCruz	Brandon DeLeon
Norman Delay	

DRAFT

4.5. (a) Discussion and review of proposed amendments to the Unified Development Code. (Howard Koontz)

Howard Koontz, Director of Development Services, provided information for this item.

Council and Commission discussion regarding proposed changes; review process; and the next steps for adoption.

4.5. (b) Consideration and possible action by the Planning and Zoning Commission relating to a recommendation for an ordinance for the adoption of the Unified Development Code and the Engineering Criteria Manual by reference. (Howard Koontz)

Motion by Commissioner Delay, second by Commissioner DeLeon, to recommend the proposed Unified Development Code for adoption and delay recommendation for the Engineering Criteria Manual. Motion passed 5:0.

4.5. (c) Planning and Zoning Commission Adjourn. 8:50 PM

5. ADJOURNMENT – 8:50 PM

Mike Snyder, Mayor

ATTEST:

Laura Hallmark, City Secretary

Rick Hudson, Chair
Planning & Zoning Commission

DRAFT

City of Hutto

Minutes

City Council Work Session

Thursday, August 20, 2026 at 6:00 PM

Executive Conference Room, City Hall – 500 W. Live Oak Street

1. CALL SESSION TO ORDER – *6:00 PM*

2. ROLL CALL

All Councilmembers present; Councilmember Thornton attended virtually.

3. PUBLIC COMMENT

There were no public comments

4. OTHER BUSINESS

4.1. Discussion and possible action related to Outside Agency Funding Applications for Fiscal Year 2027. (Kristi Barnes)

Kristi Barnes, Community & Culture Officer, presented the requests for Outside Agency Funding (OAF) and provided Council with the OAF sub-committee suggestions for fund allocation.

Council discussed allocations, noting they would not be final until the Fiscal Year 2027 (FY27) budget was passed. Council direction was as follows:

- *The American Legion – $10,000*
- *CASA – $10,000*
- *Hutto Discovery – $4,000*
- *Feed the 5000 – $30,000*
- *Hutto Resource Center – $60,000*
- *The Sandbox – $30,000*
- *YMCA Annual – $10,000*
- *YMCA Senior – $5,000*

Additional considerations:

- *Hutto Resource Center: Confirm whether Hutto Resource Center can work with $60,000 of its original $75,000 request, with the remaining $15,000 directed toward a facility-related need.*
- *Community Services Building Fund: Allocate $40,000 toward a Community Services Building Fund.*
- *Sacred Heart Community Clinic: The remaining $11,443 would be available for potential allocation to Sacred Heart Community Clinic. Council would like additional information before agreeing to allocate funds to this organization.*

DRAFT

Motion by Mayor Snyder, second by Councilmember Thornton to tentatively approve the allocations, pending the final FY27 budget passing and feedback from the organizations. Motion passed 7,0.

5. ADJOURNMENT – *6:56 PM*

ATTEST:

_____
Mike Snyder, Mayor

_____
Amanda Taylor, Assistant City Secretary

DRAFT

City of Hutto

Minutes

City Council Meeting

Thursday, August 20, 2026 at 7:00 PM

Council Chambers, City Hall – 500 W. Live Oak Street

1. CALL SESSION TO ORDER – *7:02 PM*

2. ROLL CALL

Members of Council present: Mayor Snyder; Mayor Pro Tem Porterfield; Councilmember Reynolds; Councilmember Thornton (virtual); Councilmember Morris; Councilmember Zepeda; Councilmember King

Staff members present: James Earp, City Manager; David Amsler, Assistant City Manager; Dottie Palumbo, Legal Counsel; Howard Koontz, Director of Development Services; Alberta Barrett, Finance Director; Sara Cervantes, Director of Real Estate Services; Rick Coronado, Public Works Director; Amanda Taylor, Assistant City Secretary; Kate Moriarty, Executive Director of Administrative Services; Kristi Barnes, Community & Culture Officer; Christina Bishop, Assistant Finance Director; Sara Cervantes, Executive Director of Community Services; Abby Fenton, Communications Manager; Cheney Gamboa, Director of Economic Development; David Reeves, IT Manager

3. INVOCATION – *Pastor Arthur Spence, Little Ebenezer Baptist Church*

4. PLEDGE OF ALLEGIANCE

5. PUBLIC COMMENT

1. Rick Hudson – to speak on item 7.1

6. PRESENTATIONS AND RELATED ACTION

6.1. Chamber of Commerce Quarterly Update (Joe Gonzalez)

Joe Gonzalez presented the Quarterly Chamber update, and announced his retirement from the organization. He then introduced his successor, AJ Bingham, who would be presenting the quarterly updates moving forward.

6.2. Consideration and possible action approving a wholesale wastewater rate. (Jason Gray)

Jason Gray from Willdan Financial presented the Wholesale Wastewater Rate analysis.

DRAFT

6.3. Presentation and discussion related to a mixed-use development known as 3349 Business Holdings, located within the City of Hutto's extraterritorial jurisdiction and outside the City of Hutto's wastewater Certificate of Convenience and Necessity. (Mallik Avula)

Sathish Chakka presented concept plans for the property owned by 3349 Business Holdings.

7. BOARDS AND COMMISSIONS

7.1. Consideration and possible action regarding possible appointments, re-appointments and/or removals to City Boards, Commissions, Task Forces, Economic Development Corporations, Local Government Corporations and Tax Increment Reinvestment Zone Boards, and Area Government appointments.

Rick Hudson spoke about continuing to limit appointments for one individual to a maximum of two Boards.

Motion by Councilmember Reynolds, second by Councilmember Morris to re-appoint Kyle Parkinson to the Ethics Review Commission, seat 1. Motion passed 7,0.

Motion by Councilmember Zepeda, second by Councilmember Reynolds to re-appoint Lori Brown-Duncan to the Ethics Review Commission, seat 4. Motion passed 7,0.

7.2. Consideration and possible action regarding recommendations or updates from City Council sub-committees (i.e. HISD, Fire Safety, CIP).

The HISD sub-committee did not meet, the fire safety sub-committee met Saturday, but they were unable to attend. They are going over the agreement sent to them and have not rescheduled yet. CIP sub-committee also did not meet.

8. CONSENT AGENDA ITEMS

8.1. Consideration and possible action on Resolution No. R-2026-166 approving an Individual Project Order with Kimley-Horn and Associates, Inc. in the amount of $155,618.01 for professional engineering services related to a traffic signal warrant study, traffic signal design, and the preparation of Plans, Specifications, and Estimate (PS&E) for the Emory Farms and Ed Schmidt Boulevard Intersection Improvement Project as part of the Live Oak Extension Project (T46/T79-2025). (Kate Moriarty)

8.2. Consideration and possible action on Resolution No. R-2026-167 approving Supplemental No. 1 with Cobb, Fendley, & Associates, Inc. (DBA Cobb Fendley) for Utility Coordination services in the amount of $12,460 for the Alliance Boulevard project (CIP T21-2025). (Kate Moriarty)

8.3. Consideration and possible action on Resolution No. R-2026-168 accepting the infrastructure improvements for private development known as Gola Phase 2. (Kate Moriarty)

8.5. Consideration and possible action on Ordinance No. O-2026-039 accepting and approving an annual service plan update to the service and assessment plan and updated assessment rolls for the Mustang Creek Public Improvement District. (Christina Bishop)

DRAFT

8.6. Consideration and possible action on Ordinance No. O-2026-040 accepting and approving an annual service plan update to the service and assessment plan and updated assessment rolls for the Co-Op Public Improvement District. (Christina Bishop)

8.7. Consideration and possible action on Ordinance No. O-2026-041 amending the budget for expenditures of the Economic Development Corporation. (Alberta Barrett)

8.8. Consideration and possible action on Resolution No. R-2026-169 denying the rate application proposed by SiEnergy Gas, LLC. (David Amsler)

8.10. Consideration and possible action on approving the following City Council meeting minutes: August 1, 2026 Special Budget Meeting, August 6, 2026 Joint City Council/Hutto Economic Development Corporation Meeting and August 6, 2026 Meeting. (Laura Hallmark)

Mayor requested to pull items 8.4 and 8.9; there were no objections.

Motion by Mayor Pro Tem Porterfield, second by Councilmember Morris to approve the remaining balance of the consent agenda. Motion passed 7,0.

8.4. Consideration and possible action on Ordinance No. O-2026-033 adopting the Second Amendment to the Stromberg Planned Unit Development (PUD) Zoning ordinance adopted by ordinance no. 0-2025-047, by allowing for residential, commercial and industrial uses by adding the First Amended development plan with the additional plan labeled as exhibit "B" with an expiration date of January 1, 2030, for the uses allowed by Exhibit "B". (Legal)

Motion by Mayor Snyder, second by Mayor Pro Tem Porterfield to postpone item to the next council meeting on September 3rd. Motion passed 7,0.

8.9. Consideration and possible action on acceptance of the July 2026 financial report (Alberta Barrett)

Motion by Councilmember Morris, second by Councilmember Zepeda to accept the July 2026 financial report. Motion passed 7,0.

9. ORDINANCES

9.1. Consideration and possible action on Ordinance No. O-2026-042 authorizing the notice and publication of the Joint Public Hearing of the Planning and Zoning Commission and City Council to be held on September 17, 2026 at 7:00 p.m. to consider recommendations and possible action upon an ordinance repealing and replacing Article 16.02 of the Hutto City Code, the Unified Development Code of the City of Hutto, Texas. (Howard Koontz)

Motion by Mayor Snyder, second by Mayor Pro Tem Porterfield to approve the Ordinance, but taking the sign code out of the UDC and placing it elsewhere, then incorporating the legal comments provided and posting the document online. Motion passed 7,0.

10. OTHER BUSINESS

10.1. Discussion and Possible Action Regarding the Project Sequencing and Timelines for FM 1660 S @ US 79 (T-04) and CR 199 (T-19). (Kate Moriarty)

DRAFT

Motion by Mayor Snyder, second by Councilmember King to move forward with the presented option no.2. Motion passed 7,0.

11. EXECUTIVE SESSION – *Recessed into Executive Session at 9:07 PM*

11.1. Receive legal advice pursuant to Texas Government Code Sec. 551.071, (Consultation with Attorney), to deliberate and seek legal advice regarding: a) The proposed Hutto Gateway Development Agreement, including related provisions and/or agreements for a Public Improvement District and a Tax Increment Reinvestment Zone; b) The Opus Development Agreement including the construction of offsite public improvements and the securing of public utility easements related thereto; c) Adam Orgain Restroom Project Defects (CIP P19-2024, IFB No. 2025-060-JW-02); d) Sales Tax Sharing Interlocal Agreements and proposed Interlocal Agreement for Fire Services with the Williamson County Emergency Services District # 3; e) third amendment to the Incentive Agreement with Paradigm Manufacturing, Inc.; f) release of audio and transcripts of ESD#3 sub-committee meetings; g) Blue HUB Tax Abatement Agreement and creation of a Tax Abatement Zone.

11.2. Receive legal advice pursuant to Texas Government Code Section 551.071 (Consultation with Attorney) and deliberations pursuant to Texas Government Code Sections 551.072, (Real Property); 551.087 (Economic Development Negotiations) related to pending economic development projects being considered by the Hutto Economic Development Corporation or the City of Hutto, including but not limited to: (a) Project Core; (b) Project Blue Hub; (c) Project Crawford; (d) Project Air; (e) Project Orchard; (f) Project Innoveight; and (g) Project 107 East St.

11.3. Pursuant to Texas Government Code section 551.071 (Attorney Consultation) and section 551.072 (Real Estate) to deliberate and seek legal advice regarding the acquisition of real property interests for right-of-way along CR 199 and CR 132, drainage easement along CR 199, and public utility easement at the intersection of CR 199 and CR 132.

12. ACTION RELATIVE TO EXECUTIVE SESSION – *Reconvened at 11:12 PM*

12.1. Consideration and possible action related to Executive Session agenda items, listed above.

Motion by Mayor Syder, second by Mayor Pro Tem Porterfield to approve resolution R-2026-171 calling the public hearing to create the Gateway Public Improvement District and to direct staff to begin a preliminary project and financing plan for the Gateway Tax Increment Investment Zone. Motion passed 7,0.

Motion by Mayor Pro Tem Porterfield, second by Councilmember Morris to release audio and transcripts if a public information act request is made as allowed by law, redacting portions that refer to personal health information related to the ESD #3 sub-committee meetings.

Motion by Mayor Snyder, second by Mayor Pro Tem Porterfield directing staff to draft to send a letter to the County asking them to set an election for the voters for the 80/20 sales tax split. Motion passed 6,1. (Zepeda dissenting)

DRAFT

12.2. Consideration and possible action on Resolution No. R-2026-170 to approve the third amendment to the Incentive Agreement with Paradigm Manufacturing, Inc.

Motion by Mayor Snyder, second by Councilmember Reynolds to approve resolution R-2026-170 approving the third amendment to the Incentive Agreement with Paradigm. Motion passed 7,0.

13. CITY COUNCIL COMMENTS

13.1. General Comments from City Council

There were no comments from Council.

13.2. Future Agenda Items

There were no future items requested.

14. ADJOURNMENT – *Adjourned at 11:17 PM*

ATTEST:

_____
Mike Snyder, Mayor

_____
Amanda Taylor, Assistant City Secretary

DRAFT

AGENDA ITEM REPORT
11.1.

To:	City Council
Subject:	Discussion and possible action regarding the Diversity, Equity, Inclusion and Belonging Commission. (Mayor Snyder)
Meeting:	Thursday, September 3, 2026
Department:	Community Services & Culture /
Staff Contact:	

ITEM SUMMARY:

On July 30, 2020, the City Council established the Diversity and Inclusion Commission via Ordinance Number 0-2020-021 and the name was changed to Diversity, Equity, Inclusion, & Belonging Commission via Ordinance O-2024-056 adopted September 5, 2024.

STAFF RECOMMENDATION:

FISCAL NOTES:

N/A

ATTACHMENTS:

1. Diversity, Equity, Inclusion and Belonging Commission (1)
2. Ordinance Number 0-2020-021 (PDF)
3. O-2024-056 DEI name change to DEIB

DIVISION 8
Diversity, Equity, Inclusion and Belonging Commission

§ 2.02.201. Short title.

This division shall be known, and may be cited, as the diversity, equity, inclusion and belonging commission ordinance of the city.
(Ordinance O-2020-021 adopted 7/16/20; Ordinance O-2024-056 adopted 9/5/2024)

§ 2.02.202. Definitions.

For the purpose of this division, the following definitions shall apply unless the context clearly indicates or requires a different meaning.

City. The City of Hutto.

Commission. The diversity, equity, inclusion and belonging commission (DEIB) of the city.
(Ordinance O-2020-021 adopted 7/16/20; Ordinance O-2024-056 adopted 9/5/2024)

§ 2.02.203. Creation; membership requirements.

(a) Creation.There is hereby created the diversity and inclusion commission of the city.

(b) Membership.

(1) All commission members shall be appointed by the city council and shall serve without compensation.

(2) The commission shall be composed of seven members to serve three-year terms.

(3) Each candidate for appointment as a member of the diversity and inclusion commission shall be at least eighteen (18) years old and shall have resided within the corporate city limits, within territory annexed prior to the appointment, or within the boundaries of the Hutto Independent School District for at least twelve months preceding the appointment. The diversity and inclusion commission shall, to the extent possible, be broadly representative of economic status, race, color, religion, gender, national origin, ancestry, marital status, physical or mental disability, sexual orientation and gender identity.

(4) Commission members shall serve without compensation and shall not be employed by or hold any other position in city government. In addition to any other requirements prescribed by the city council, members shall maintain the qualifications established by this section while in office.

(5) Members of the commission shall be limited to three consecutive full terms in office. A person who has served three consecutive full terms as a regular member may not again hold the same office until at least one term out of office has passed.

(6) The commission members shall serve staggered three-year terms that will coincide with the term of the member of the city council with the same place number.

(Ordinance O-2020-021 adopted 7/16/20; Ordinance O-2022-031 adopted 7/7/22; Ordinance

Downloaded from https://ecode360.com/HU6354 on 2026-08-25

O-2023-073 adopted 11/2/2023)

§ 2.02.204. Organization.

(a) Officers.The commission shall elect from its members, at the first meeting of the commission held on or after January 1st of each year, a chairman and a vice-chair, and may elect a secretary. Such officers shall hold office for terms of one year, or until their successors take office.

(b) The commission shall establish rules of procedure consistent with city ordinances, resolutions, and regulations.

(Ordinance O-2020-021 adopted 7/16/20)

§ 2.02.205. Dismissal from commission.

(a) Any member who moves one's residence outside the city limits shall automatically be dismissed from membership.

(b) No member of the commission shall remain in his/her position after being elected or appointed to city, county or state board or office.

(Ordinance O-2020-021 adopted 7/16/20; Ordinance O-2022-051 adopted 2022)

§ 2.02.206. Commission meetings.

(a) The commission shall hold at least one regular meeting each month and shall fix regular meeting dates at a regular meeting place. Special meetings may be called as necessary. A majority of the commission members serving shall constitute a quorum to do business.

(b) All meetings shall be held in accordance with the Texas Open Meeting Act (Tex. Gov't Code, §§551.001 et seq.), as it now exists, or as same may hereafter be amended or codified, to the extent of its applicability to the commission.

(c) Every regular or special meeting of the commission shall be open to the public, except as may be authorized by the Texas Open Meetings Act.

(Ordinance O-2020-021 adopted 7/16/20)

§ 2.02.207. Duties of the commission.

(a) The commission shall serve in an advisory capacity and render recommendations upon request of the city council to include, without limitation, as follows.

(1) Create focused recommendations specific to the city related to equity and empowerment issues.

(2) Actively promote community awareness and education on the value of diversity.

(3) Promote equity on the basis of economic status, race, color, religion, gender, national origin, ancestry, marital status, lawful source of income, physical or mental disability, familial status, sexual orientation and gender identity.

(4) Develop recommendations for actions to strengthen policies, practices, services and

Downloaded from https://ecode360.com/HU6354 on 2026-08-25

programs.

(5) Create a culture and framework of community equity, diversity and inclusion awareness efforts, programs and activities that are available and accessible to all community members.

(b) The commission shall provide upon request of the city council coordination, collaboration, innovation and focus to development effective solutions to address equity and empowerment issues.

(c) The commission shall provide an annual report to the city council by January 31st of each year and may be required to provide additional reports upon request of the city council.

(Ordinance O-2020-021 adopted 7/16/20)

§ 2.02.208. Quorum.

A quorum of the commission shall consist of three (3) members.
(Ordinance O-2023-073 adopted 11/2/2023)

§ 2.02.209. Commission action.

An action of the commission shall be approved by three (3) members.
(Ordinance O-2023-073 adopted 11/2/2023)

§ 2.02.210. through § 2.02.230. (Reserved)

Downloaded from https://ecode360.com/HU6354 on 2026-08-25

ORDINANCE NO. O-2020-021

AN ORDINANCE OF THE CITY OF HUTTO, TEXAS, AMENDING THE CITY OF HUTTO CODE OF ORDINACES CHAPTER 2-ADMINISTRATION AND PERSONNEL-ARTICLE 2.02 BOARDS, COMMISSIONS AND AUTHORITIES TO ADD DIVISON 8- SECTION 2.02.187: ESTABLISHING A DIVERSITY AND INCLUSION COMMISSION; PROVIDING THAT THIS ORDINANCE SHALL BE CUMULATIVE AND REPEALING ALL ORDINANCES IN CONFLICT; PROVIDING FOR SEVERABILITY; AND DECLARING AN EFFECTIVE DATE.

WHEREAS, the City of Hutto acknowledges that the history of discrimination in the United States of America continues to affect the privilege and/or lack of opportunity for people in the City; and

WHEREAS, the City of Hutto acknowledges that equity occurs when differences such as race, ethnicity, religion, gender, economic status, sexual orientation/gender identification, veteran status, marital status, language, age, disability, etc. do not determine a person's economic, social, or political access; and

WHEREAS, the City of Hutto now holds a majority-minority status, i.e., no racial or ethnic groups comprises a majority of the City's population; and

WHEREAS, the City of Hutto is committed to recognizing and undoing discrimination of any type; and

WHEREAS, providing opportunities for the City and residents to engage, participate and support their community through unified and collaborative activities, programs, and collective citizen engagement, culturally diverse programs, business services, trades and entertainment is valued; and

WHEREAS, all members of the Hutto community offer distinct perspectives, e.g., life experiences, cultural backgrounds, ideas, and interpretations, that foster creativity, innovation, and economic growth; and

WHEREAS, the City of Hutto will benefit from the identification of potential inequities in City services, programs, human resource practices, and decision-making processes; and from encouraging and empowering multicultural appreciation on the City; and

WHEREAS, the City of Hutto will benefit from establishing a Commission of diverse residents to address inequities that impact quality of life for identifiable communities in the City, e.g., race, ethnicity, religion, gender, economic status, sexual orientation/gender identification,

veteran status, marital status, language, age, disability, etc., as well as low-income communities in the City with regards to resource allocation, representation, health outcomes, and other disparities; and

WHEREAS, the City Council of the City of Hutto now finds it appropriate to amend the City of Hutto Code of Ordinances Chapter 2 Administration and Personnel Article 2.02 Boards Commissions, and Authorities to add Division 8 establishing a Diversity and Inclusion Commission.

NOW, THEREFORE, BE IT ORDAINED BY THE CITY COUNCIL OF THE CITY OF HUTTO, TEXAS:

Section 1. Findings. The foregoing recitals are hereby found to be true and correct and are hereby adopted by the City Council and made a part hereof for all purposes and findings of fact.

Section 2. Amendment to Municipal Code of Ordinances. The Code of Ordinances of the City of Hutto, Texas, is hereby amended by amending **Chapter 2 Administration and Personnel and adding Division 8- Diversity and Inclusion Commission. (Departments, Boards and Commissions), Section 31.60 Equity Commission** as follows:

§ 2.02.187 DIVERSITY AND INCLUSION COMMISSION.

§ 2.02.188 SHORT TITLE.

This subchapter shall be known, and may be cited, as the Diversity and Inclusion Commission Ordinance of the City of Hutto, Texas.

§ 2.02.189 DEFINITIONS.

For the purpose of this subchapter, the following definitions shall apply unless the context clearly indicates or requires a different meaning.

COMMISSION. The Diversity and Inclusion Commission of the city.

CITY. The City of Hutto.

§ 2.02.190 CREATION; MEMBERSHIP REQUIREMENTS.

(A) Creation. There is hereby created the Diversity and Inclusion Commission of the City.

(B) Membership.

1. All Commission members shall be appointed by the City Council and shall serve without compensation.
2. The Commission shall be composed of seven members to serve three-year terms.
3. Each candidate for appointment as a member of the Diversity and Inclusion Commission shall be at least eighteen (18) years old and shall have resided within the corporate city limits, or within territory annexed prior to the appointment, for at least twelve months preceding the appointment. The Diversity and Inclusion Commission shall, to the extent possible, be broadly representative of economic status, race, color, religion, gender, national origin, ancestry, marital status, physical or mental disability, sexual orientation and gender identity.

4. Commission members shall serve without compensation and shall not be employed by or hold any other position in city government. In addition to any other requirements prescribed by the City Council, members shall maintain the qualifications established by this section while in office.
5. Members of the Commission shall be limited to three consecutive full terms in office. A person who has served three consecutive full terms as a regular member may not again hold the same office until at least one term out of office has passed.
6. The term of office of Commission members is three years and shall commence on the last day of July. Initial appointments for establishment of the Commission shall be staggered and with partial terms, with three (3) members appointed with terms ending June 30, 2023 and four (4) members appointed with terms ending June 30, 2024.

§ 2.02.191 ORGANIZATION.

(A) Officers. The Commission shall elect from its members, at the first meeting of the Commission held on or after January 1 of each year, a chairman and a vice-chair, and may elect a secretary. Such officers shall hold office for terms of one year, or until their successors take office.

(B) The Commission shall establish rules of procedure consistent with city ordinances, resolutions, and regulations.

§ 2.02.192 DISMISSAL FROM COMMISSION.

(A) Commission members shall actively participate in the Commission's activities, and any member who is absent for three consecutive regular meetings of the Commission without valid excuse, as determined by the Commission, or moves one's residence outside the city limits, shall automatically be dismissed from membership.

(B) No member of the Commission shall remain in his/her position after being elected or appointed to city, county or state board or office.

§ 2.02.193 COMMISSION MEETINGS.

(A) The Commission shall hold at least one regular meeting each month and shall fix regular meeting dates at a regular meeting place. Special meetings may be called as necessary. A majority of the Commission members serving shall constitute a quorum to do business.

(B) All meetings shall be held in accordance with the Texas Open Meeting Act (TEX. GOV'T CODE, §§551.001 et seq.), as it now exists, or as same may hereafter be amended or codified, to the extent of its applicability to the Commission.

(C) Every regular or special meeting of the Commission shall be open to the public, except as may be authorized by the Texas Open Meetings Act.

§ 2.02.194 DUTIES OF THE COMMISSION.

(A) The Commission shall serve in an advisory capacity and render recommendations upon request of the City Council to include, without limitation, as follows.

(1) Create focused recommendations specific to Hutto related to equity and empowerment issues.
(2) Actively promote community awareness and education on the value of diversity.
(3) Promote equity on the basis of economic status, race, color, religion, gender, national origin, ancestry, marital status, lawful source of income, physical or mental disability, familial status, sexual orientation and gender identity.
(4) Develop recommendations for actions to strengthen policies, practices, services and programs.
(5) Create a culture and framework of community equity, diversity and inclusion awareness efforts, programs and activities that are available and accessible to all community members.

(B) The Commission shall provide upon request of the City Council coordination, collaboration, innovation and focus to development effective solutions to address equity and empowerment issues.

(C) The Commission shall provide an annual report to the City Council by January 31 of each year and may be required to provide additional reports upon request of the City Council.

Section 3. Repealer. This Ordinance shall be cumulative of all other ordinances of the City of Hutto, and this Ordinance shall not operate to repeal or affect any other ordinances of the City of Hutto except insofar as the provisions thereof might be inconsistent or in conflict with the provisions of this ordinance, in which event such conflicting provisions, if any, are hereby repealed.

Section 4. Severability. If any provision of this Ordinance is illegal, invalid, or unenforceable under present or future laws, the remainder of this Ordinance will not be affected and, in lieu of each illegal, invalid, or unenforceable provision, a provision as similar in terms to the illegal, invalid, or unenforceable provision as is possible and is legal, valid, and enforceable will be added to this Ordinance.

Section 5. Effective Date. That this Ordinance will become effective on its adoption and passage by the City Council in accordance with Section 3.13 of the City Charter.

PASSED AND APPROVED this 16th day of July, 2020.

CITY OF HUTTO, TEXAS

By: Doug Gaul, Mayor

ATTEST:

Holly Nagy, City Secretary



ORDINANCE NO. O-2024-056

AN ORDINANCE OF THE CITY OF HUTTO, TEXAS, AMENDING CHAPTER 2, DIVISION 8. DIVERSITY AND INCLUSION COMMISSION, OF THE CODE OF ORDINANCES TO CHANGE THE NAME TO DIVERSITY, EQUITY, INCLUSION & BELONGING COMMISSION; AND PROVIDING FOR: FINDINGS OF FACT, ENACTMENT, REPEALER, SEVERABILITY, EFFECTIVE DATE, PUBLICATION, AND PROPER NOTICE & MEETING.

WHEREAS, the City of Hutto, Texas (the "City"), is a home-rule city operating under the laws of its Charter and the State and Texas, by and through its duly elected City Council members; and

WHEREAS, the City Council finds an amendment to the Code of Ordinances is necessary to meet a request by the Diversity and Inclusion Commission is in the best interest of the City; and

WHEREAS, the City finds that this Ordinance was passed and approved at a meeting of the City Council of the City of Hutto held in strict compliance with the Texas Open Meetings Act at which a quorum of the City Council Members was present and voting; and

WHEREAS, the City Council has determined that all prerequisites to adopt this Ordinance have been met.

NOW, THEREFORE, BE IT ORDAINED BY THE CITY COUNCIL OF THE CITY OF HUTTO, TEXAS, THAT:

SECTION 1: The foregoing recitals are incorporated into this Ordinance by reference as findings of fact as if expressly set forth herein.

SECTION 2: Chapter 2, Article 2.02.202, Division 8 of the Code of Ordinances of the City of Hutto, is hereby amended as follows:

ARTICLE 2.02 BOARDS, COMMISSIONS AND AUTHORITIES

Division 8. *Diversity, Equity, Inclusion & Belonging* ***Commission***

Section 2.02.202 Definitions.

For the purpose of this division, the following definitions shall apply unless the context clearly indicates or requires a different meaning:

Commission. The "Diversity, Equity, Inclusion & Belonging Commission" (DEIB) of the City.

SECTION 3: All ordinances or parts of ordinances and sections of the City Code of Ordinances in conflict with this ordinance are hereby repealed to the extent of such conflict.

SECTION 4: It is hereby declared to be the intention of the City Council that the sections, paragraphs, sentences, clauses, and phrases of this Ordinance are severable and, if any phrase, sentence, paragraph or section of this Ordinance should be declared invalid by the final judgment or decree of any court of competent jurisdiction, such invalidity shall not affect any of the remaining phrases, clauses, sentences, paragraphs and sections of this Ordinance, since the same would have been enacted by the City Council without the incorporation of this ordinance of any such invalid phrase, clause, sentence, paragraph or section. If a court of competent jurisdiction to be invalid shall adjudge any provision of this Ordinance, the invalidity shall not affect other provisions or applications of this Ordinance that can be given effect without the invalid provision, and to this end the provisions of this Ordinance are declared to be severable.

SECTION 5: The City Secretary shall publish this ordinance on the City's website and shall publish the approval of this ordinance by the City Council shall be in the City Council minutes.

SECTION 6: It is hereby officially found and determined that the meeting at which this ordinance is passed was open to the public as required and that public notice of the time, place, and purpose of said meeting was given as required by the Open Meetings Act, Chapter 551 of the Texas Government Code.

SECTION 7: Pursuant to Section 3.13 of the Hutto City Charter, this Ordinance is adopted and enacted.

SECTION 8: This Ordinance shall take effect immediately after its final passage and any publication in accordance with the requirements of the Hutto City Charter, the Hutto Code of Ordinances and the laws of the State of Texas.

READ and **APPROVED** on this the 5th day of September, 2024.

CITY OF HUTTO, TEXAS

Mike Snyder, Mayor

ATTEST:

Laura Hallmark, City Secretary

City Council Protocol Policy

Adopted May 19, 2022
Amended November 2, 2023
Amended November 16, 2023
Amended May 2, 2024
Amended June 20, 2024
Amended May 1, 2025
Amended August 7, 2025
Amended November 6, 2025
Amended July 16, 2026

1 Overview of Roles and Responsibilities

a) Role of the Mayor

The Mayor shall:

1) Act as the official head of the City for all ceremonial purposes.
2) Chair Council Meetings and Work Sessions of the City Council.
3) Vote on propositions that come before the City Council but shall have no power to veto.
4) When authorized by the City Council, sign all official documents such as ordinances, resolutions, conveyances, grant agreements, official plats, contracts, and bonds.
5) Recognize comments from citizens at public meetings.
6) Call for special meetings.
7) Select a substitute for City representation when Mayor cannot attend.
8) Make judgment calls on proclamations, special presentations, etc.
9) Recommend subcommittees as appropriate for Council approval.
10) Lead the Council into an effective, cohesive working team.
11) Work with City Manager or designee to prepare the Council agenda.
12) Perform such other duties consistent with this Charter or as may be imposed upon him or her by the City Council.

b) Role of Mayor Pro-Tem

The Mayor Pro-Tem shall be elected by the City Council at the first regular City Council Meeting following each regular City election or allowed by the Hutto City Charter. If the Mayor Pro-Tem position becomes vacant or the Mayor Pro-Tem is removed by forfeiture of office, the Mayor Pro-Tem shall be elected at the next regular City Council Meeting to fill the remainder of the term of the Mayor Pro-Tem.

The Mayor Pro-Tem shall:

1) Act as Mayor during the disability or absence of the Mayor, and in this capacity shall have the rights conferred upon the Mayor.

c) Role of a Council Member

All members of the City Council, including those serving as Mayor and Mayor Pro-Tem, have equal votes. No Council member has more power than any other Council member, and all should be treated with equal respect.

All Council members shall:

1) Fully participate in City Council Meetings and other public forums while demonstrating respect, kindness, consideration, and courtesy to others.
2) Prepare in advance of Council Meetings and be familiar with issues on the agenda. Stay focused and act efficiently during public meetings.
3) Represent the City at ceremonial functions at the request of the Mayor.

4) Be respectful of other people's time. Serve as a model of leadership and civility to the community.
5) Inspire public confidence in Hutto government.
6) Provide contact information to the City Manager's Office in case an emergency or urgent situation arises while a Council member is out of town.
7) Demonstrate honesty and integrity in every action and statement.
8) Participate in scheduled activities to increase team effectiveness and review Council procedures, such as this Council Protocol Policy.

d) Meeting Chair's Responsibilities

The Mayor will chair official meetings of the City Council, unless the Mayor Pro-Tem or another Council member is designated as Chair of a specific meeting. This individual maintains order, decorum, and the fair and equitable treatment of all speakers and keeps discussion and questions focused on the specific agenda item under consideration.

e) Parliamentary Authority

1) *Robert's Rules of Order,* 12th Edition 2021, shall be the parliamentary authority for City Council Meetings, until the 13th or other successive edition is designated by the City Council Rules and Procedures may be adopted that conflict with *Robert's Rules of Order* and shall take precedence.
2) When rules and procedures are silent on an issue, *Robert's Rules of Order* shall prevail.
3) When *Robert's Rules of Order* conflict with statues, the Charter, ordinances, resolutions, or motions of the City Council, the latter shall prevail.

f) Process for Appointment to a City Board, Commission, Committee, Hutto Economic Development Corporation ("HEDC"), Local Government Corporation, ("LGC"), Tax Increment Reinvestment Zone ("TIRZ") or Task Force

The City Council is responsible for making appointments to a City Board, Commission, Committee, HEDC, LGC, TIRZ or Task Force. To promote a process that is efficient, transparent, and that allows input from the entire City Council, the following process shall be used to make appointments to a City Board, Commission, Committee, HEDC, LGC, TIRZ or Task Force:

1) City Council members are exempt from the following processes and may be appointed by a majority vote of City Council to serve on HEDC, LGC Boards, TIRZ Boards or a Task Force, unless prohibited by law.
2) Each City Council Member will have the opportunity to recommend applicants for appointment to each board or commission. Appointments shall correspond to their Place on City Council. Example: Council Member Place 1 shall recommend appointments to all boards/commissions Seat 1. Council Member Place 2 shall recommend appointments for Seat 2. The Mayor, having no place number shall recommend appointments for Seat 7.
3) No person can be appointed to a City-created Board, Commission, Committee,

HEDC, LGC, TIRZ, or Task Force unless that person has filled out and submitted an appropriate application to the City Secretary before the meeting at which they are appointed by the City Council.

4) After receipt of application, the City Secretary will verify that each applicant meets the qualifications for serving on the desired Board Commission, Committee, HEDC, LGC, TIRZ or Task Force.
5) All Board, Commission, Committee, HEDC, LGC, TIRZ, or Task Force appointments must be confirmed by a majority vote of the City Council.
6) Appointments to the Economic Development Corporations, Local Government Corporations, and TIRZ Boards will follow the process as outlined in the Bylaws governing those organizations.
7) It is preferred, but not required, that appointees serve on only one Board, Commission, Committee, HEDC, LGC, TIRZ, or Task Force at a given time, but are not allowed to serve on more than two (2) Boards, Commissions, Committees, HEDC, LGC, TIRZ, or Task Force, so long as those Boards have no conflict of interest to each other.
8) For Boards or Commissions having alternate members, upon the removal or resignation of a regular member, the replacement member will follow the processes outlined for Boards, Commissions, Committee, HEDC, LGC, TIRZ, or Task Force, but is not required to fill out a new application.
9) Reappointments of existing members shall follow the established requirements to serve as outlined above.
10) The City Secretary's Office shall be responsible for orienting and swearing-in (if applicable) newly appointed members to Boards, Commissions, etc. This orientation shall include official notice of appointment, listing responsibilities, notifying the appointee of the days, times, frequency, and locations of meetings, and notifying the Chair of the appointment. This orientation shall be done as soon as practicable after the appointment is made.
11) The City Secretary's Office must keep City Council paperwork (spreadsheets, applications, etc.) pertaining to any Board, Commission, Committee, HEDC, LGC, TIRZ, or Task Force updated with all current information, including but not limited to: current members and their elected positions (Chair, Treasurer, etc.), current members' contact information, any notes from City Council as directed for historical relevance, and all attendance records for each Board, Commission, Committee, HEDC, LGC, TIRZ, or Task Force. All paperwork to be kept in a shared folder accessible to all City Council for review at any time.

g) Process for Removal from a City Board, Commission, Committee, HEDC, LGC, TIRZ or Task Force

The City Council is responsible for removing members from a City Board, Commission, Committee, HEDC, LGC, TIRZ, or Task Force. To promote a process that is efficient, transparent, and that allows input from the entire City Council, the following process shall be used to remove members from a City Board, Commission, Committee, HEDC, LGC, TIRZ, or Task Force:

1) Absences – Any City Board, Commission, Committee, HEDC, LGC, TIRZ, or Task Force member whose attendance falls below 75% within a rolling 12- month period or missing four consecutive meetings may be deemed ineligible to serve and may forfeit their appointed position for not meeting the requirements to serve. The Chair shall provide written notice to the City Secretary of the dates and reasons, if known, of the member's absences. The City Secretary shall work with the City Manager or designee to add an item to the next regular City Council Meeting for discussion and possible action on the removal of the member. The City Secretary shall also notify the member of their non-compliance of the attendance requirement to allow them an opportunity to respond.
2) Other Removals – A Board, Commission, Committee, HEDC, LGC, TIRZ, or Task Force member serves at the pleasure of the City Council and may be removed in either of the following manners:
    a) Upon the recommendation of any member of the City Council and the affirmative vote of four (4) or more members of the City Council.
    b) The Board, Commission, HEDC, LGC, TIRZ, or Task Force may, by majority vote, submit to the City Council a recommendation for one of their own members to be removed. The Chair shall forward this recommendation to the City Secretary, who shall work with the City Manager or designee to add an item to the next regular City Council Meeting for discussion and possible action on the recommendation for removal. The City Council may remove the member by the affirmative vote of four (4) or more members of the City Council.
3) Vacancies shall be filled in accordance with the appointment procedures for new members as outlined above.
4) These removal procedures do not apply to any Board, Commission, Committee, HEDC, LGC, TIRZ, or Task Force established by state or federal law, City Charter, or ordinance to the extent these procedures are in direct conflict with such other law.

h) Nomination and Voting Procedure for Positions not Subject to Appointment Process Above

For positions not subject to appointment process noted above, the City Council shall follow the procedure for nominations from the floor described below:

1) Nominations:
    a) The presiding officer will call for nominations from the City Council by stating, for example, "Nominations are now in order for the office of…"
    b) A Member need not be recognized by the presiding officer to make a nomination, unless the Member wishes to speak in the debate on it at the same time.
    c) No second is required.

d) The presiding officer repeats each nomination until all nominations for the office have been made.
e) Members of the City Council are not required to make a nomination, but no Member may nominate more than one person.
f) All nominations are completed before voting takes place.

2) Voting:
   a) Votes can be cast for any person who is eligible for election, even if that person has not been nominated.
   b) When called upon by the presiding officer, every Member, in turn, will state the name of the person they are voting for.
   c) If no nominee receives at least four votes, the nominee with the lowest votes shall be dropped from consideration and voting will be repeated for the remaining nominees. This procedure will be followed until one nominee receives at least four votes.
   d) Once a nominee receives at least four votes, a motion may be accepted to appoint such nominee to the office or position.
   e) After the motion is seconded, discussion on the motion is entertained and then a formal vote to appoint the nominee is conducted.
   f) If the motion fails, the nomination process may be repeated until the office or position is filled.

i) Charge from the Mayor and Council.

1) The Mayor and Council shall adopt a "charge" for every appointed Board, Commission, or Committee.
2) The charge shall be recommended by the appropriate City staff liaison designated by the City Manager.
3) The charge by definition establishes the direction, boundaries, and intended accomplishments of a Board, Commission, or Committee and includes appropriate elements, such as the following:
   a) General powers and duties
   b) Vision and/or mission statements
   c) Goals, responsibilities
   d) Officers, members
   e) Qualifications
   f) Ethics and standards of performance
   g) Training requirements
   h) Timeline, schedule, reporting dates
   i) Meeting requirements
   j) Accountability to Mayor and Council
   k) Accessibility and accountability to the public
   l) Liaison with City staff
4) The charge shall be reviewed in required orientation and subsequent training.
5) The City Secretary shall develop a template for committee charges from the Mayor and Council.
6) This charge shall be reviewed annually by Council and staff and updated or

modified as necessary.

2 Meetings

a) Agenda Development, Review, and Posting

The agenda of each City Council Meeting is prepared as a joint effort between the Mayor, City Manager or designee, and any other staff members designated by the City Manager.

The Mayor may consult with the City Manager or designee regarding proposed agenda items to be included in the agenda of a regular or special meeting of the Council. The review may be waived by the Mayor or other presiding officer. If not waived, the review should be an update regarding the agenda, recommended actions, and other developments. The review shall focus on the agenda and related written materials and shall not constitute a briefing. The review shall not be subject to the posting requirements of the Texas Open Meetings Act, unless attended by additional Council Members.

Any one member of the City Council may place items on the agenda by submitting them to the City Manager, or designee and Mayor by 5:00pm on the Tuesday of the week prior to the Thursday Council Meeting. The request should state the nature of the item and include any supporting material. Once finalized, the proposed agenda and packet are placed into the designated City Council online file location on the Friday before the scheduled meeting date. Council members have until noon on the Monday before the scheduled meeting date to propose changes or corrections to the proposed agenda and packet, but no new agenda items may be added without the Mayor's written approval. The agenda items placed by the members of the City Council are not subject to review by the Mayor, other Council Member, City Manager or designee, or other City staff member, nor is an agenda item subject to editing without the approval of the member of the Council who submitted it. The final agenda is posted on the City Hall Bulletin Board and on the City's website in accordance with the Texas Open Meetings Act (the "TOMA"). A link to the packet shall be emailed to all Council Members.

b) Meeting Schedule

Regular meetings are held the first and third Thursdays of each month at 7:00 p.m., in the City Hall Council Chambers, 500 W. Live Oak Street, Hutto, Texas. Other meetings may arise on an as-needed basis, such as budget work sessions. A schedule of regular meetings is determined in December for the upcoming year. At times, scheduling conflicts will arise, and a regular meeting may be rescheduled to another day. Per the Hutto City Charter, any special meeting may be called by the Mayor or three (3) Council Members.

c) Work Sessions

Work Sessions have several purposes:

1) to discuss pending items for the Council agenda;
2) to discuss items that staff needs to bring to Council's attention;
3) to receive progress reports on current projects; and
4) to hear regular updates from members of appointed Boards, Commissions, or Task Forces.

Overall, the purpose of the work session is for Council and staff to meet and discuss various items in an informal manner where questions may be asked of each other and in-depth discussion can take place. Official action on City business is allowed to take place during Work Sessions in the same manner as action is taken by City Council during regular or special meetings.

Work sessions are typically held at 6:00 p.m. on the day of the Council Meeting but may be held on other days and at times as determined by the City Council. All Work Session agendas are posted in compliance with the TOMA and are always open to the public.

Work Sessions are attended by all members of the City Council, the City Manager, Assistant City Manager or designee(s), and the City Secretary. Depending on the agenda items, the City Attorney, Department Directors, other staff members, consultants, board members, etc. may be invited.

d) Emergency Meetings

Special rules allow for posting notice of emergency meetings and for supplementing a posted notice with emergency items. These rules affect the timing and content of the notice, but not its physical location. Section 551.045 of the Texas Government Code provides:

1) In an emergency or when there is an urgent public necessity, the notice of a meeting or the supplemental notice of a subject added as an item to the agenda for a meeting for which notice has been posted is sufficient if it is posted for at least one hour before the meeting is convened.

2) An emergency or urgent public necessity exists only if immediate action is required of a governmental body because of:
    a) An imminent threat to public health and safety; or
    b) A reasonably unforeseeable situation.
3) The governmental body shall clearly identify the emergency or urgent public necessity in the notice or supplemental notice.
4) A person who is designated or authorized to post notice of a meeting by a governmental body shall post the notice stating the governmental body's reason for the emergency or urgent public necessity.
5) The sudden relocation of a larger number of residents from the area of a declared disaster to a governmental body's jurisdiction is considered a reasonably unforeseen situation for a reasonable period immediately following the relocation. Notice of an emergency meeting or supplemental notice of an emergency item added to the agenda of a meeting to address a

situation described by this subsection must be given to the members of the news media as provided by Section 551.047 of the Texas Government Code not later than one hour before the meeting is convened.

The public notice of an emergency meeting must be posted at least one hour before the meeting is scheduled to begin. A government body may decide to consider an emergency item during a previously scheduled meeting instead of calling a new emergency meeting. The governmental body must post notice of the subject added as an item to the agenda at least one hour before the meeting begins.

In addition to posting the public notice of an emergency meeting or supplementing a notice with an emergency item, the governmental body must give special notice of the emergency meeting or emergency item to the news media who have previously (1) filed a request with the governmental body, and (2) agreed to reimburse the governmental body for providing the special notice. The notice to members of the news media is to be given by telephone, facsimile transmission, or electronic mail at least one hour before the meeting is convened.

Because Section 551.045 of the Texas Government Code provides for a one-hour notice only for emergency meetings or for adding emergency items to the agenda, a governmental body adding non-emergency items to its meeting agenda must satisfy the general notice period of Section 551.043 or Section 551.044 of the Texas Government Code, as applicable, regarding the subject of that item.

The public notice of an emergency meeting or emergency item must "clearly identify" the emergency or urgent public necessity for calling the meeting or for adding the item to the agenda of a previously scheduled meeting. The Act defines "emergency" for purposes of emergency meetings and emergency items under Texas Government Code Section 551.045(b).

A governmental body's determination that an emergency exists is subject to judicial review. The existence of an emergency depends on the facts in a given case.

e) Public Comments

The City Council encourages and solicits public input on all matters both in and out of City Council Meetings. Members of the public wishing to make general announcements, or address a topic that is not included on the agenda, must do so under the "Public Comments" agenda item at the beginning of the meeting.

At each regular meeting, the Council will set aside time at the beginning of a meeting to afford the public an opportunity to speak to the City Council regarding matters of concern or interest to the public regarding City affairs. Members of the public wishing to address the City Council speak in person or by telephone must fill out the required sign-in form. The required sign-in form will be provided at the meeting location and online. Sign-in forms provided at the meeting location must be turned in to the City Secretary prior to the meeting being convened and online

forms must be completed at least fifteen (15) minutes before the meeting. Written Public Comments received prior to the meeting will have the individual's name recorded in the official meeting minutes.

Public Comment about non-agenda items. Members of the public signing up to speak about non-agenda items shall, when recognized by the presiding officer, have three (3) minutes to speak regarding non-agenda items. Comments on non-agenda items shall not be used by citizens as an additional comment period for agenda items. The presiding officer shall not be obligated to recognize a speaker for a second comment regarding non-agenda items.

Public Comment About Agenda Items. Members of the public signing up to speak about agenda items shall, when recognized by the presiding officer, have three (3) minutes to speak regarding each agenda item the speaker has signed up for when the agenda item is up for consideration. Alternatively, the speaker may choose to give their comments on specific agenda items at the beginning of the meeting during Public Comment. Speakers may express their opinions or viewpoints on an issue, but are not permitted to participate in the debate on an issue. The time limit for Public Comments about agenda items may be extended to answer questions from members of the City Council.

Members of the public wishing to read a letter from another member of the public will be allowed only three (3) minutes to read the letter and address their own comments.

Members of the public who are present may designate their time to another speaker with a limit of two designations or a total time of nine (9) minutes per speaker.

Members of the public addressing the Council through a translator or needing additional time due to a disability shall be allowed six (6) minutes. The City Secretary is the designated timekeeper.

Any person, including persons in the audience, who acts in an inappropriate or disruptive manner may be asked to leave the City Council Chambers or may be removed as allowed by law.

Signs will be permitted in the City Council Chambers or in any other room in which the City Council is meeting as long as the sign does not disrupt the meeting by blocking either the video camera(s) or other in person attendees' views. Signs may not be used to disrupt the meeting to ensure the meeting can proceed in a timely and orderly manner. Exhibits, displays, and visual aids used in connection with presentations to the City Council are permitted. Any exhibit, display, visual aid, or gift a person wishes to present to City Council must be given to the City Secretary.

Once Public Comment has been received, the City Council may proceed to other business.

The audience and the viewers are reminded that the comments of the speakers reflect the speaker's positions or opinions.

City Council Members' responses to any comment made by a speaker during Public Comment are restricted by law. The Council and its members are prohibited from discussing or acting upon any matter that was not listed under the action item portion of the agenda and not included on the posted notice, other than to provide statements of fact or to request that an item be put on a future agenda for discussion and/or possible action. A lack of a response from Council Members does not indicate agreement or approval of the comments.

However, the City Manager or designee, City Attorney, and City staff are not prohibited by law or City policy from responding as is deemed appropriate to comments made in the Public Comment portion of this meeting.

The Mayor or person chairing the City Council Meeting may read this policy prior to the commencement of the Public Comments portion of the meeting.

f) City Council Comments

City Council Comments shall be limited to items of community interest as defined by the TOMA and requests to place subjects on the agenda for a future meeting. The City Council may not prohibit public criticism of the governmental body, including criticism of any act, omission, policy, procedure, program, or service. This subsection does not apply to public criticism that is otherwise prohibited by law.

g) Public Hearings

The staff member that is responsible for the public hearing will make a brief presentation on the item, and the Mayor will open the hearing for Public Comment. Individuals may sign up to speak by completing a Public Comment Card and submitting it to the City Secretary. Each speaker will have three (3) minutes to speak. The Mayor will close the public hearing when Public Comment has concluded.

h) Video and Streaming of Meetings

City Council Meetings are held at 500 West Live Oak Street, Hutto, Texas 78634, except for some work sessions and those meetings or portions of meetings conducted in Executive Session, are web streamed live, made available on the local Community Access Channel, and archived on the City's website. Videos and audio are archived on the City's website for up to five (5) years for the sole purpose of being able to rebroadcast the meetings on the Community Access Channel and the web. Both forms of broadcasted meetings are for the viewing by Hutto citizens and are not the permanent record of City Council proceedings.

i) Proclamations

The Mayor issues proclamations as a way to give special recognition by the City to an individual, event, issue, etc. All requests for proclamations must go through the City Secretary's Office and be approved by the Mayor. Proclamations may be presented at a City Council Meeting (or other meetings as approved by the Mayor) or prepared and mailed to the requester. If the proclamation is to be presented at a City Council Meeting, there must be a representative at the meeting to receive the document or arrangements made to provide the proclamation to the representative. Proclamations may not need to follow the rules above concerning timeline requirements for being added to a City Council Agenda, however, only the Mayor can add a Proclamation to the City Council Agenda after the deadline has passed for Agenda Items to be added.

j) Executive Session

Where possible, documents to be discussed in Executive Session will be made available to City Council Members before the meeting at which the Executive Session is held. Executive Sessions will be audio recorded as allowed by the TOMA.

k) Texas Open Meetings Act

Every meeting of the City Council and a Board, Commission, Committee, HEDC, LGC, or TIRZ must be conducted in accordance with Chapter 551 of the Texas Government Code, commonly referred to as the TOMA (the "Texas Open Meetings Act" or the "Act"). City Task Forces are exempt from this requirement. The Act is based on the notion that public officials should discuss and vote on public business under public scrutiny, so that the public will have the opportunity to know what their public officials are doing. The Act contains criminal penalties for violations. To help educate government officials on the Act requirements, each elected or appointed member of a governing body must take at least one hour of training in the TOMA. The training must be completed no later than ninety (90) days after the member takes the oath of office or assumes the responsibilities of the office.

The Attorney General's Office allows the requirement to be met in at least two ways:

1) A video is available to view online on the Attorney General's webpage concerning open government; and
2) Certification of other entities, such as the Texas Municipal League, to provide the training.

The training needs to be conducted in coordination with the City Secretary who is responsible for certifying that all elected and appointed officials are in compliance with the requirements under the TOMA.

l) Format of Meetings

The City Council, City Boards, Commissions, Committees, HEDC, LGCs, TIRZs,

or Task Forces will follow *Robert's Rules of Order* in conducting public meetings. The presiding officer will use the following guidelines when addressing each agenda item:

1) Announce the item. The presiding officer should clearly announce the item number and read the entire item as listed on the agenda.
2) Receive a Report. The staff or Council Member who was responsible for adding the item to the agenda should provide background information or a report, so the governmental body has a clear understanding of the item. Council Members will be allowed to ask questions and receive answers if further clarification on the item is needed, but deliberation of the item should be reserved until after motions are made.
3) Receive Citizen Input. If any citizens have signed up to speak on the item, they should be given an opportunity to speak. They may speak either before or after the staff report is given.
4) Make Motions. The presiding officer will accept any motions and allow for discussions on the motion. The presiding officer will repeat the motion (with any amendments) and ask for discussion on the motion. Each Council Member will be given an opportunity to speak, and no Member shall speak a second time unless all other Council Members have been given an opportunity to speak, unless otherwise allowed by *Robert's Rules of Order*. No Council Member shall speak more than twice on an agenda item, which rule may be suspended as circumstances require. The time for each council member to speak on an item shall be limited to five (5) minutes for each opportunity to speak.
5) Voting. Once discussion is complete, the president officer shall call for a vote. The vote will be recorded by the City Secretary and will be announced by the presiding officer.
6) The City Attorney (or another person designated by the City Council) shall serve as parliamentarian for City Council Meetings and shall ensure *Robert's Rules of Order* are followed.

m) Use of Digital Media During the Meeting

The City Council should limit the use of digital media except in cases where they are being notified of something of a personal nature or are being forwarded information by city staff regarding an item under consideration. The use of such messaging contrary to the authorized uses as outlined above could constitute a violation of the TOMA. City Council shall not allow the use of digital media during any Executive Session, except for that prepared by Legal Counsel.

n) Violations of Protocols

Any Council Member may be disciplined for violation of this Protocol Policy, or if a Council Member acts in a manner that, including but not limited to bullying, cyberbullying, harassment, and sexual harassment, causes embarrassment or disgrace to the City of Hutto.

For discipline to be considered, an item shall be placed on a City Council agenda by at least two (2) Members of the City Council for discussion in Executive Session unless a Council Member requests the item to be heard in Open Session.

Such action may only take place after discussion of the offense in Executive Session unless the Member for whom discipline is being considered requests the discussion to be held in Open Session. The offending Member shall be present to answer any questions asked by Members of the City Council or make other statements as he or she may desire. If the offending Member refuses to attend the Executive Session but has not requested the item to be held in Open Session, the remaining Members of the City Council may proceed in their presence.

After discussion in Executive Session (or Open Session as allowed above), the City Council may choose to discipline the offending Member as follows, and if required by law, shall be made publicly in Open Session in accordance with the TOMA:

1) No Action. The City Council chooses to take no action.
2) Private Censure. The City Council may choose to leave their comments to the offending Member left in the confines of Executive Session.
3) Assignments. Temporary removal from Committee or Liaison assignments for a specified period of time by a supermajority vote.
4) Public Censure. The City Council may choose to publicly censure the offending Member through a resolution passed by a supermajority vote and entered into the public record.

3 Financial Matters

a) Budget

The budget is the City's financial plan that presents the services to be provided to the community over the coming year and the funds necessary to perform these services. Hutto operates under a fiscal year that begins on October 1st and ends on September 30th. In early spring, staff begins the process of estimating anticipated revenues, identifying and evaluating potential expenditures, and preparing a recommended budget. Special budget workshops will be scheduled with the Council throughout the summer, as needed, for the City Manager or designee to present the recommended budget on or before August 15th of each fiscal year. Public hearings are typically held on the budget in August, with the Council considering the budget at a September Council Meeting. For more information, please reference the City of Hutto Fiscal and Budgetary Policy.

b) Training and Education

There are training opportunities for Council Members offered by various organizations such as the Texas Municipal League and the National League of Cities. During the budget process, City Council Members are asked to submit a

training plan for the upcoming year. The City Manager's Office will assist any Council Member with registration, travel arrangements, and forms that are required by the Finance Department.

c) Travel and Reimbursement

City Council Members shall follow the City's Travel and Reimbursement Policy that is outlined in the City of Hutto Employee Manual.

d) Council Campaign Disclosures

Generally, candidates and officeholders are required to file reports of contributions and expenditures by January 15th and July 15th of each year. The reports filed on these dates are known as semi-annual reports. These reports must be filed even if there is no activity to report for the period covered. (https://www.ethics.state.tx.us/data/forms/coh/coh.pdf).

An "Appointment of a Campaign Treasurer by a Candidate Form" (Form CTA) must be filed with City Secretary before accepting contributions or making expenditures (https://www.ethics.state.tx.us/data/forms/coh/cta.pdf). It is recommended that this form be filed at the time the candidate's application is filed. A candidate that does not intend to accept more than $940.00 (or other amount designated by the Texas Ethics Commission) in sign contributions or make more than $940.00 (or other amount designated by the Texas Ethics Commission) in political expenditures should sign page 2 of the form declaring "Modified Reporting"; thereby, eliminating the election reporting requirements of January 15th and July 15th. More information regarding campaign financial disclosures can be found at www.ethics.state.tx.us/resources/cf/.

4 Ethics

a) Conflicts of Interest

1) No City official or appointee shall intentionally or knowingly disclose any confidential information gained by reason of said official's or appointee's position concerning the property, operations, policies, or affairs of the City, or use such confidential information for the pecuniary gain of said official or appointee, or others.

2) No City official or appointee shall intentionally or knowingly use one's official position or City-owned facilities, equipment, or supplies for the pecuniary gain or advantage of said official or appointee, or use City-owned vehicles, printing facilities, postage facilities, or long-distance telephone service for personal reasons, for pecuniary gain or advantage, or in any political campaign.

3) Except as otherwise specifically authorized by ordinance, no City official or appointee shall intentionally or knowingly appear before the body of which the

official is a member while representing himself, or any other person, group, association, interest, or business entity.

4) No City official or appointee shall intentionally or knowingly represent directly or indirectly any private person, group, or interest other than himself or a family member before any department, agency, commission, or board of the City for economic benefit or pecuniary gain.

5) No City official or appointee shall vote on or participate in any decision-making process if the official or appointee has a direct financial interest in the outcome of the matter under consideration. No City official or appointee shall vote on or participate in any decision-making process on any matter concerning real property or a business entity if the City official or appointee has a substantial interest in the business entity or real property.

6) None of the foregoing shall be construed to prohibit any City official or appointee from representing his interest in his owner-occupied homestead before the council, board, commission, or any department except for the body of which the official or appointee is a member.

7) In any action or proceeding in the Municipal Court of the City which was instituted by a City official or appointee in the course of official duties, no City official shall knowingly represent anyone other than himself or a family member. If a Council Member elects to have a trial in Municipal Court, the City Council, without the participation of the affected Council Member, shall appoint a special judge to preside over the trial.

8) No City official or appointee shall act as a surety for any person or business entity that has any contract with the City, or on any bond required by the City for any City official or appointee.

b) Disclosure of Interest

1) If any City official or appointee has a substantial interest in any real property or a business entity involved in any decision pending before the body of which the City official or appointee is a member, the City official or appointee shall not vote or otherwise participate in the consideration of the matter.

2) In the case of a City official or appointee, the City official or appointee shall publicly disclose, verbally or in writing, the nature and extent of such interest to the body on which the City official or appointee serves prior to any discussion or determination of the matter to be considered or immediately upon discovery of the conflict of interest. The statement of disclosure shall be included in the official minutes of the body.

c) Financial Disclosure

1) No later than February 28th of each year, each City official shall file a sworn

Financial Disclosure Statement with the City Secretary reflecting the financial situation of the City official as of December 31st of the previous year. Notwithstanding any other term or provision of these Council Protocols, as used in this section:

a) The term "family member" shall include only the City official and the spouse and the minor children of the City official.
b) The term "substantial interest" shall include only the interests of the City official and the spouse and minor children of the City official.

2) A newly appointed City official shall file a sworn Financial Disclosure Statement with the City Secretary within thirty (30) days from the date the position with the City is assumed. Said statement shall reflect the financial situation as of the date of employment or appointment and for the previous twelve (12) months.

3) Each person required to file a Financial Disclosure Statement shall do so on the form approved by the City Council and supplied by the City Secretary.

4) The City Secretary shall maintain all Financial Disclosure Statements required to be filed herein as public records and retain them for the period required by the Public Information Act.

5) Pursuant to Ordinance 2023-060, the City Council established procedures for the City Secretary to make Financial Disclosure Statements available to the public. The procedures are currently set forth in Article 2.05.046 "Public Access to Statements; Retention" of the Hutto City Code of Ordinances. The procedures include requiring the City Secretary to maintain the statements in a manner accessible to the public; redacting certain personal information of the official before review by the public; and keeping a log of those members of the public who review and/or inspect the financial statements of City Council Members.

d) Gifts

No City official or appointee shall intentionally or knowingly solicit or accept any contribution, gift, or economic benefit with actual or constructive knowledge that same is:

1) Offered or given with the intent to influence the judgment or discretion of such official or appointee; or
2) Given in consideration of the favorable exercise of such official's or appointee's judgment or discretion in the past.

5 Communications

a) Correspondence To/From Council

The City Secretary receives and processes the City Council's incoming mail. All mail to the Mayor and Council Members is reviewed and placed in the mailboxes located

in the Council Executive Conference Room. All invitations are scanned and sent to the Council Members via email for action, and the City Secretary will take care of confirming the Members' attendance at an event and, if necessary, schedule the event on their calendar and post a potential quorum notice in accordance with the TOMA.

All mail to the Mayor is opened and reviewed as to priority for a response, copies needed for city staff and/or City Council, notation of upcoming events, etc. All important letters addressed to the Mayor are copied to the Mayor and an original is kept in the official files in the City Secretary's Office.

All needed responses to letters are coordinated between the Mayor, City Manager or designee, and City Secretary.

b) Media Relations

The media frequently contacts Council Members for information and quotes. The Mayor may issue statements on behalf of the City only after having consulted with the City Communications Department and jointly developed a statement. Any comment made by the Mayor that has not been reviewed by the City Communications Department shall not be considered a representation of the official City position on the communication. If the media contacts an individual Council Member, the Council Member should be clear that any comments represent their own personal viewpoint and not that of the City.

Below are three things to remember when dealing with the press:

1) Never go "off the record";
2) Choose words carefully and cautiously; and
3) Remember the media lives by tight deadlines.

All official City statements that will be sent out as a press release will go through the City Manager's Office for distribution. The Public Information Officer maintains up-to-date contact information for all local media outlets. In order to ensure that all media outlets are treated fairly, all news releases should be submitted to the Public Information Officer for review and distribution.

c) Social Media

Individuals are encouraged to positively promote the City and share information on their own social media websites, as allowed by law. However, City Council Members along with Board, Commission, Committee, HEDC, LGC, TIRZ, or Task Force Members should exercise caution when commenting or responding to other posts. Only factual information should be provided to City-related topics as personal views may not reflect that of the entire Council, Board, or City. In addition, unless authorized by state law, you should carefully check to ensure that no other Council Members or Board or Commission Members have responded on the same discussion thread to avoid a possible violation of the TOMA.

In general, responses should be referred to and handled by the City's Public Information Officer (the "PIO"). In certain circumstances, the City Manager or designee, PIO, and/or Mayor may determine that it is appropriate for someone else to respond directly.

The Mayor and Council should treat each other with dignity and respect in all social media posts. Disagreements on policy are allowed, but personal attacks are not allowed.

The Mayor and Council shall have a disclaimer on all social media platforms that are used in their capacity as elected officials that their posted information does not represent the official position of the City or other Council Members. Social media platforms include, but are not limited to, Instagram, Facebook, Snapchat, TikTok, X, and YouTube.

The Mayor and Council should utilize the Official City of Hutto Council Online Message Board for comments relating to City business.

d) Public Information Act

Texas Government Code, Chapter 552, known as the Texas Public Information Act, requires that most City records, including those in the possession of Council Members, be open to the public for inspection.

"Public Records" are broadly defined under the Act to include "the portion of all documents, writings, letters, memoranda, or other written materials which contain public information." "Public information" includes "all information collected, assembled, or maintained by or for governmental bodies pursuant to law or ordinance or in connection with the transaction of official business."

Certain information is specifically excluded from the requirements of the Texas Public Information Act. While the list of exempt materials is too long to recite here, it includes such items as working papers being used to draft ordinances or resolutions; certain personnel records; information that would, if released, give an advantage to bidders; documents protected because of attorney-client relationships; and documents related to pending or ongoing litigation.

Despite the narrow exemptions established in the law, the effect is to require that most of the written material used or produced by Council Members be made available upon request to the news media and other members of the public. If it is felt that certain records are exempt from the requirements of the law, and there has been no previous determination that particular types of records are exempt, the City Secretary's Office will request an opinion from the Attorney General's Office, within the deadlines provided by the Texas Public Information Act.

If an Attorney General's Opinion is requested, and the Opinion subsequently holds that the information is public, and the City official has not released it, Section

552.324(b) of Texas Government Code requires that a suit by a governmental body be brought no later than the 30th calendar day after the governmental body receives the decision it seeks to challenge. The City shall not appeal an Attorney General ruling without first receiving the consent of the City Council.

The City of Hutto has designated the City Manager or designee as the PIO with regard to the Public Information Act. Therefore, all requests made under the Public Information Act shall be directed to the City Manager or designee.

Requests by Council Members in their Official Capacity

An official of the City who, in an official capacity, requests information held by the City does not act as a member of the public in doing so. Thus, the exceptions requiring public disclosure under the Act do not control the right of access of an official of the City to information maintained by the City. Accordingly, information may be released to City officials requesting the information in their official capacity in compliance with the following policy:

1) Requests for information from a City official must be submitted to the City Secretary and the City Manager or designee in writing.
2) The City Secretary shall promptly provide notice of the request to the remaining Members of the Council.
3) As soon as possible, but no later than ten (10) business days from the receipt of the request, the City Secretary will respond to the request from the City official with either copies of the requested information, notice that the information is available for inspection, or notice that the request will be added to the next City Council agenda for consideration and direction.
4) Information provided in response to a request by a Member of the Council will be made available to all Members of the Council, unless they waive their right to receive the specific material.
5) Members of the Council will not be charged for information sought in their official capacity.
6) Information that is protected by confidentiality laws and/or common law privacy laws that has no relationship to the transaction of official business, such as individuals' dates of birth, social security numbers, and personal financial information, will be redacted prior to release.
7) The City Secretary will mark all information provided in response to a request from a Member of the Council as "Confidential – For Official Eyes Only."

For more information regarding the Public Information Act, please refer to the City of Hutto Public Information Policy – Ordinance No. 2020-022.

e) Communication with City Staff

The City Council or its Members shall deal with City officers and City employees who are subject to the direction and supervision of the City Manager or designee solely through the City Manager or designee, and neither the City Council nor its Members shall give orders to any such officer or employee, either publicly or privately, except as otherwise provided in the Hutto City Charter.

1) Information requests

a) The Mayor and Council Members may request information from City staff, especially while following up to Council's directives and concerns expressed by constituents, so long as such inquiries are not attempts to "deal with" or to "give orders" to City staff and, therefore, are consistent with the Charter.
   1) These requests may relate to securing information or determining the status of work assigned in response to Council directives.
   2) Such requests shall not be considered "management directives," but, simply, legitimate information requests allowed by the Charter.
   3) City staff members shall inform the City Manager or designee of any such contacts.
   4) If the City Manager or designee or City staff members have questions about the propriety of providing the information requested, they shall direct their concerns to the Mayor and Council for their decision, rather than decline to provide it.

2) Communication with City Staff

a) The City Manager or designee shall assist the Mayor and Council Members in developing and implementing methods for facilitating communication and interaction with City staff members, especially department directors.
   1) This may include scheduling presentations by department directors and their staff to the Mayor and Council.
   2) Such presentations shall be duly posted and may be scheduled before regular Council business meetings.
   3) Department presentations may be combined with staff reports, constituent requests, and queries about the status of projects and responses to Council directives.

b) The Mayor and Council Members may interact freely and communicate with City staff members at town hall meetings, budget hearings, workshops, and committee meetings.

c) City staff members shall make every effort to facilitate cooperative efforts with the Mayor and Council Members to meet the needs of constituents.

6 General Policies and Documents

a) Technology and Equipment Use & Electronic Communications and Systems Access Use

City-Issued Smart Phones

The City implemented the electronic distribution of agendas, reports, budget documents, etc. In order to access and use such documents, a City-issued electronic smartphone will be provided for each Council Member. City-issued electronic smartphones are for official City business only; personal use is prohibited.

The City does not pay for any accessories for any of the smartphones, such as cases, styluses, screen covers, personal applications, etc. When Council Members complete their term of office, all City-issued equipment shall be returned to the City Manager or designee.

E-mail Account

Each Council Member is assigned an individual City e-mail address with the huttotx.gov domain. E-mails to the entire Council can be sent to citycouncil@huttotx.gov. The City's e-mail system shall be used for the communication and exchange of information related to City business. City e-mail may not be used for personal or political purposes.

Council Members can access their e-mail from their computer, phone, iPad, etc. through a web-based client; IT staff will assist with the set-up.

There should be no expectation of privacy when using City e-mail.

Please note, Council Members are subject to the City's Technology and Equipment Use Policy.

b) Political Activity

Council members have the right to endorse candidates for all Council seats or other elected offices. However, to mention endorsements during Council Meetings or at other official city meetings may violate Texas election laws.

c) City Charter

The City of Hutto Charter is a written document that establishes the basic governmental structure, form of government, corporate boundaries, and municipal powers. In this respect, it is similar to a state or national constitution. As such, amendments to the City Charter require an election and approval of the citizens of Hutto. The copy of the Charter can be retrieved at www.huttotx.gov or in the City Secretary's Office.

d) Code of Ordinances

The City Code of Ordinances is the compilation of the local laws that have been adopted and codified by the City Council. The City Code covers a wide range of areas, including taxes, court, environmental regulations, alcoholic beverages, business regulations, etc. Amendments to the City Code must be adopted by the City Council. A copy of the Code of Ordinances can be found at www.huttotx.gov or in the City Secretary's Office.

AGENDA ITEM REPORT
11.3.

To:	City Council
Subject:	Discussion and update on the requested cost forecast for running a city-owned fire department. (Councilmember Zepeda)
Meeting:	Thursday, September 3, 2026
Department:	City Council /
Staff Contact:	David Amsler

ITEM SUMMARY:

City Council requested an update regarding the anticipated annual operating cost of a City-owned fire department.

At this time, staff does not have sufficient information to provide a reliable annual operating cost estimate. Developing that estimate requires additional information and analysis from the City's consultant on the operational assumptions that would form the basis of a municipal fire department, including staffing, service levels, equipment, facilities, and other ongoing operational requirements.

Without those underlying assumptions, providing an annual cost estimate would require staff to make assumptions that could materially affect the resulting forecast and may not accurately represent the cost of operating a City-owned fire department.

The next Hutto Economic Development Corporation meeting is scheduled for September 14, 2026, and provides an opportunity to further discuss the requested analysis with the consultant. Staff anticipates using that discussion and any additional information received to develop a more complete cost forecast for subsequent presentation to City Council.

STAFF RECOMMENDATION:

Staff recommends that City Council provide any additional direction regarding the scope of the requested cost analysis.

Staff further recommends allowing the consultant discussion and analysis to proceed before presenting an estimated annual operating cost so that any forecast provided to Council is based on defined operational assumptions and sufficient supporting information.

FISCAL NOTES:

None at this time.

AGENDA ITEM REPORT
11.3.

ATTACHMENTS:

None

Received
Angela Kavanaugh
8/11/2026

STATE OF TEXAS

COUNTY OF §
§
§

WILLIAMSON

PETITION FOR RELEASE FROM EXTRATERRITORIAL JURISDICTION ("ETJ") AREA BY LANDOWNER PURSUANT TO CHAPTER 42.101 SUBCHAPTER D, TEXAS LOCAL GOVERNMENT CODE

The undersigned **A-A-A Storage Gattis School LLC** ("Petitioner") hereby petitions, City of Hutto in Willaimson County, Texas (the "Municipality"), to remove the below-described property from the ETJ boundaries of the Municipality as allowed by Texas Local Government Code §42.1 01, Subchapter D (the "Statute").

The Property is described in the attached Exhibit D" being the Recorded Deed and map to the Property designating such territory which are incorporated herein by reference for all purposes.

1. THE STATUTE APPLIES TO THE PETITIONER'S PROPERTY

The Property is not area located:

(1) within five miles of the boundary of a military base, as defined by Section 43.0117, at which an active training program is conducted;

(2) in an area that was voluntarily annexed into the extraterritorial jurisdiction that is located in a county:

(A) in which the population grew by more than 50 percent from the previous federal decennial census in the federal decennial census conducted in 2020; and

(B) that has a population greater than 240,000;

(3) within the portion of the extraterritorial jurisdiction of a Municipality with a population of more than 1.4 million, that is:

(A) within 15 miles of the boundary ofa military base, as defined by Section 43.0117, at which an active training program is conducted; and

(B) in a county with a population of more than two million;

(4) in an area designated as an industrial district under Section 42.044; or

(5) in an area subject to a strategic partnership agreement entered into under Section 43.0751.

2. PETITION REQUIREMENTS

The petition requesting release under the Statute has been signed by:

(1) more than 50 percent of the registered voters of the area described by the petition as of the date of the preceding uniform election date; or

(2) a majority in value of the holders of title of land in the area described by the petition, as indicated by the tax rolls of the applicable central appraisal district.

(3) All signature requirements under SB 2038 have been satisfied.

(4) The petition includes a map of the land to be released and describes the boundaries of the land to be released by (1) metes and bounds or lot/block number if there is a recorded map or plat. Petitioner requests that the Municipality shall immediately release the area from the Municipality's extraterritorial jurisdiction.

4. MUNICIPALITY'SACTIONS ONCE THE PETITION IS FILED

The municipal secretary or other person responsible for verifying signatures shall verify the signatures contained in the Petition and notify the residents and landowners of the area described within this petition of the results of the petition.

If a resident or landowner obtains the number of signatures on the petition required under Texas Local Govt. Code Section 42.104, the municipality shall immediately release the area from the municipality's extraterritorial jurisdiction.

3. MUNICIPALITY'S FAILURE TO TAKE ACTION

If a Municipality fails to take action to release the Property by the later of the 45th day after the date the Municipality receives the petition or the next meeting of the Municipality's governing body that occurs after the 30th day after the date the Municipality receives the petition, the area is released by operation of law.

PETITIONER: Dated August 8, 2026

A-A-A Storage Gattis School LLC

Signed: 

By: John Muhich - manager

EXHIBIT D

ELECTRONICALLY RECORDED **2019047418**

TRV 2 PGS

STATE OF TEXAS)
) KNOW ALL MEN BY THESE PRESENTS:
COUNTIES OF TRAVIS & WILLIAMSON)

SPECIAL WARRANTY DEED

NOTICE OF CONFIDENTIALITY RIGHTS: IF YOU ARE A NATURAL PERSON, YOU MAY REMOVE OR STRIKE ANY OR ALL OF THE FOLLOWING INFORMATION FROM THIS INSTRUMENT BEFORE IT IS FILED FOR RECORD IN THE PUBLIC RECORDS: YOUR SOCIAL SECURITY NUMBER OR YOUR DRIVER'S LICENSE NUMBER.

THAT JM ASSETS, LP, A NEVADA LIMITED PARTNERSHIP ("Grantor"), for and in consideration of the sum of Ten Dollars ($10.00) and other good and valuable consideration paid to Grantor paid by A-A-A STORAGE GATTIS SCHOOL LLC, 4203 Spinnaker Cove, Austin, Texas 78731 ("Grantee"), the receipt of which is hereby acknowledged and confessed,

Grantor has GRANTED, SOLD, and CONVEYED, and by these presents does GRANT, SELL, and CONVEY unto said Grantee the property described as:

LOT 1, LARKSPUR, A SUBDIVISION IN TRAVIS AND WILLIAMSON COUNTIES, ACCORDING TO THE MAP OR PLAT THEREOF, RECORDED IN VOLUME 81, PAGES 82-84, OF THE MAP AND/OR PLAT RECORDS OF TRAVIS COUNTY, TEXAS, AND IN CABINET E, SLIDES 23-25, OF THE MAP AND/OR PLAT RECORDS OF WILLIAMSON COUNTY, TEXAS. (PROPERTY LIES IN BOTH THE COUNTIES).

TO HAVE AND TO HOLD the above-described premises, together with all and singular, the rights and appurtenances thereunto in anywise belonging unto said Grantee, his heirs and assigns, forever. And the Grantor covenants with the Grantee that the Grantor has done nothing to impair such title as Grantor received in said Land and Improvements, and Grantor will warrant and defend the title against the lawful claims of all persons claiming by, through or under the Grantor, but not otherwise.

This conveyance is made subject to any and all valid and subsisting restrictions, easements, rights of way, reservations, maintenance charges together with any lien securing said maintenance charges, zoning laws, ordinances of municipal and/or other governmental authorities, conditions and covenants, if any, applicable to and enforceable against the above-described property as shown by the records of the County Clerk of said County.

The use of any pronoun herein to refer to Grantor or Grantee shall be deemed a proper reference even though Grantor and/or Grantee may be an individual (either male or female), a corporation, a partnership or a group of two or more individuals, corporations and/or partnerships, and when this Deed is executed by or to a corporation, or trustee, the words "heirs, executors and administrators" or "heirs and assigns" shall, with respect to such corporation or trustee, be construed to mean "successors and assigns".

9/First American Title/GF# 2345113

EFFECTIVE DATE: FEBRUARY 26, 2019

JM ASSETS, LP, A NEVADA LIMITED PARTNERSHIP

BY: A-A-A STORAGE, LLC, A TEXAS LIMITED LIABILITY COMPANY, ITS GENERAL PARTNER

BY: _____
JOHN MUHICH, ITS PRESIDENT

STATE OF TEXAS)
)
COUNTY OF TRAVIS)

THIS INSTRUMENT WAS ACKNOWLEDGED BEFORE ME ON THE 4 DAY OF APRIL 2019 BY JM ASSETS, LP, A NEVADA LIMITED PARTNERSHIP BY A-A-A STORAGE, LLC, A TEXAS LIMITED LIABILITY COMPANY, ITS GENERAL PARTNER BY JOHN MUHICH, ITS PRESIDENT.

KIM LOWE
Notary Public, State of Texas
Comm. Expires 09-10-2022
Notary ID 124330303

_____
NOTARY PUBLIC – STATE OF TEXAS

FILED AND RECORDED
OFFICIAL PUBLIC RECORDS

DANA DEBEAUVOIR, COUNTY CLERK
TRAVIS COUNTY, TEXAS
April 04 2019 02:07 PM
FEE: $ 30.00 **2019047418**

LAND TITLE SURVEY

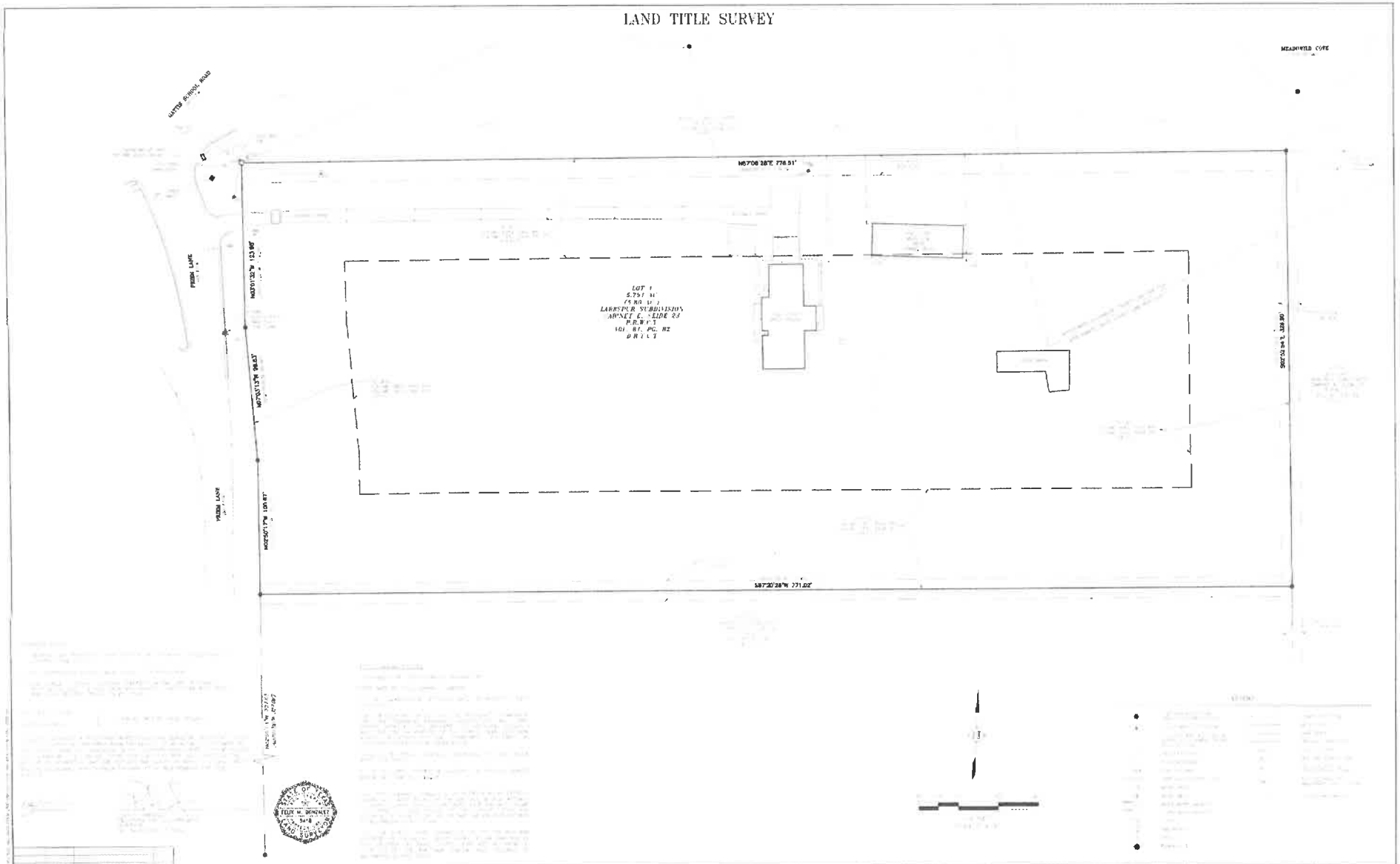

BIG SKY SURVEYING 4025 CHRIS DRIVE ABILENE, TEXAS 79606 (325)128-6959 FIRM NO. 10191201	LAND TITLE SURVEY LOT 1, LARKSPUR, A SUBDIVISION IN TRAVIS AND WILLIAMSON COUNTIES, ACCORDING TO THE MAP OR PLAT THEREOF, RECORDED IN VOLUME 81, PAGES 82-84, OF THE MAP AND / OR PLAT RECORDS OF TRAVIS COUNTY, TEXAS, AND IN CABINET L, SLIDES 23-25, OF THE MAP AND / OR PLAT RECORDS OF WILLIAMSON COUNTY, TEXAS (PROPERTY LIES IN BOTH THE COUNTIES).	J.M.ASSETS, LP	SHEET NO. 1