City of Hutto

Agenda

City Council Meeting

Thursday, June 2, 2022 at 7:00 PM

City Council Chambers

In accordance with the Texas Open Meetings Act this meeting agenda is posted for public information, continuously, for at least 72 hours prior to the scheduled time of the meeting on the bulletin board located on the exterior wall of the City Hall building at 500 West Live Oak, Hutto, Texas. This meeting agenda is also accessible via the Internet at huttotx.gov

1. CALL SESSION TO ORDER

2. ROLL CALL

3. INVOCATION

4. PLEDGE OF ALLEGIANCE

5. CITY MANAGER COMMENTS

6. CITY COUNCIL COMMENTS

Pursuant to Texas Government Code Sec. 551.0415, a member of the governing body may make an announcement about items of community interest during a meeting of the governing body without given notice of the subject of the announcement. Items of Community Interests include: (1) expressions of thanks, congratulations, or condolence; (2) information regarding holiday schedule; (3) an honorary or salutary recognition of public official, public employee, or other citizen, except that a discussion regarding a change in the status of a person's public office or public employment is not an honorary or salutary recognition of the subdivision; (4) a reminder regarding social, ceremonial, or community event organized or sponsored by an entity other than the governing body that was attended or is scheduled to be attended by a member of the governing body or an official or employee of the political subdivision; and (5) announcements involving imminent threat to the public health and safety of people in the political subdivision that has arisen after the posting of the agenda.

6.1. General Comments from City Council

6.2. City Council Liaison Reports

7. PUBLIC COMMENT

Any citizen wishing to speak during public comment may do so after completing the required registration form. The purpose of this item is to allow the residents of Hutto and other interested persons an opportunity to address the City Council on agenda issues and on non-agenda issues that are a matter of the jurisdiction of the City Council (i.e., City policy or legislative issues). Non-agenda issues regarding daily operational or administrative matters should be first dealt with at the administrative level by calling City Hall at (512) 759-4839 during business hours. Each person providing public comment will be limited to 3 minutes. Any citizen wishing to speak during public comment may do so after completing the required registration form. Written comments for this meeting may also be sent to comments@huttotx.gov PRIOR to 4:00 pm on 6.2.22. The email must include name, address, phone # and email to be recognized properly. Written comments will be provided to Council.

8. CONSENT AGENDA ITEMS

8.1. Consideration and possible action on approving the 5/5/22 and 5/19/22 City Council meeting minutes.

8.2. April 2022 Financial Report (Angie Rios)

8.3. Consideration and possible action on Resolution No. R-2022-056 approving a contract for wireless internet services at Brushy Creek Amphitheatre with Charter Communications Operating, LLC (Spectrum) (David Reeves)

8.4. Consideration and possible action on Resolution No. R-2022-051 accepting the infrastructure improvements for the subdivision known as Cottonwood Creek Phase 2 (Matt Wojnowski)

8.5. Consideration and possible action on Resolution No. R-2022-057 suspending the June 17, 2022 effective date of Oncor Electric Delivery Company's requested rate change to permit the City time to study the request and to establish reasonable rates; approving cooperation with the Steering Committee of Cities served by Oncor to hire legal and consulting services and to negotiate with the Company and direct any necessary litigation and appeals. (Legal)

8.6. Consideration and possible action on Resolution No. R-2022-054 accepting the infrastructure improvements for the subdivision known as Wilco Ranch Phase 3 Section 2. (Matt Wojnowski)

8.7. Consideration and possible action on Resolution No. R-2022-058 approving the auction contract with Richie Brothers Auctioneers for the sale of street equipment. (Angie Rios)

8.8. Consideration and possible action on Resolution No. R-2022-059 accepting ROW Donation of approximately 0.2743-acre tract or parcel of land in the E. Thomason Survey, Abstract No. 844, and the W.J. Brown Survey, Abstract No. 105, located in Williamson County, Texas, from MA Durango Farms, LLC. (Legal)

8.9. Consideration and possible action on Resolution No. R-2022-060 accepting ROW Donation of approximately 0.0947-acre tract or parcel of land in the E. Thomason Survey, Abstract No. 844, and the W.J. Brown Survey, Abstract No. 105, located in Williamson County, Texas, from Vantage at Hutto, LLC. (Legal)

8.10. Consideration and possible action on Resolution No. R-2022-061 accepting the conveyance of approximately 0.0006 of one acre on land in the W.J. Brown Survey, Abstract No. 105, located in Williamson County, Texas, and 0.0012 of one acre of the land in the W.J. Brown Survey, Abstract No. 105 from MA Durango Farms, LLC, Meritage Homes of Texas, LLC, Vantage at Hutto, LLC, and Durango Farms Owners Association, Inc. (Legal)

8.11. Consideration and possible action on Resolution No. R-2022-062 approving a Shared Use Path Agreement with the Oncor Electric Delivery Company, LLC, Vantage at Hutto, LLC, and MA Durango Farms, LLC, for the City to operate and maintain a Shared Use Path on an Oncor easement which is recorded in Volume 233, Page 447 of the Deed Records of Williamson County, and as modified in Document Number 2020007624 of the Official Public Records of Williamson County. (Legal)

8.12. Consideration and possible action on Resolution No. R-2022-063 approving the 2022 Amended and Restated Interlocal Agreement between the City of Hutto, Hutto Independent School District, and Texas State Technical College to clarify payment obligations and responsibilities between the City and TSTC. (Legal)

9. ORDINANCES

9.1. Consideration of a public hearing and possible action on Ordinance 2022-029 approving a Specific Use Permit request for the property known as 201 FM 1660 N., to allow a medical office (chiropractor) and associated parking. (First Reading) (Ashley Lumpkin)

9.2. Consideration and possible action on Ordinance No. O-2022-028 establishing an Outside Agency Funding Advisory Committee; and providing for related matters. (Second Reading) (City Council)

10. RESOLUTIONS

10.1. Consideration and possible action on Resolution No. R-2022-038 approving an Advance Funding Agreement (AFA) between the City of Hutto and the Texas Department of Transportation (TxDOT) for the FM 1660 Intersections Improvement project, and authorizing the Interim City Manager to execute the AFA. (Wade Benton)

10.2. Consideration and possible action on Resolution No. R-2022-055 authorizing the Interim City Manager to submit a grant application to the US Dept of Justice, Office of Community Orienting Policing Services (COPS Office), for the Cops Hiring Program (CHP) and authorizing the Chief of Police to act as the City's authorized grant official. (Chief Jeff Yarbrough)

10.3. Consideration of a public hearing and possible action on Resolution No. R-2022-021 authorizing and creating the Estates of Hutto Public Improvement District within the City of Hutto pursuant to Chapter 372 Texas Local Government Code, providing an effective date, and related matters thereto. (Legal)

11. OTHER BUSINESS

11.1. Consideration and possible action regarding possible appointments, re-appointments and/or removals to City Boards, Commissions, Task Forces, Economic Development Corporations, Local Government Corporations and Tax Increment Reinvestment Zone Boards, City Council Liaisons, and Area Government appointments.

11.2. Discussion on the FY 2023 budget process and major revenues (Angie Rios)

11.3. Consideration and possible action on the Outside Agency Funding (OAF) Process (Kristi Robich, Angie Rios)

11.4. Consideration and possible action regarding the removal of concrete barriers located within the Durango Farms Subdivision. (Matt Wojnowski)

11.5. Discussion and possible action to approve and/or confirm board expiration dates and assign seat numbers to City board, commission and task force members (Mayor Pro Tem Peter Gordon and Councilmember Krystal Kinsey)

11.6. Consideration and possible action regarding IBCA BBQ Cookoff, Mayor's involvement and the process related too, including but not limited to emails, text messages and legal memorandum from and including the City Council, City Staff and City Attorney into possible Interference with Administration, Alleged Interactions with Members of the Public, Alleged Interactions with the City Manager and to the release of all information completely unredacted. (City Council)

12. EXECUTIVE SESSION

The City Council for the City of Hutto reserves the right to adjourn into executive session at any time during the course of this meeting to discuss any of the matters listed above as authorized by the Texas Government Code Sections 551.071 (Litigation/Consultation with Attorney), 551.072 (Deliberations regarding real property), 551.073 (Deliberations regarding gifts and donations), 551.074 (Deliberations regarding personnel matters) or 551.076 (Deliberations regarding deployment/implementation of security personnel or devices) and 551.087 (Deliberations regarding Economic Development negotiations).

12.1. Receive legal advice pursuant to Texas Government Code Sec. 551.071 related to Pending Legal Requests, Potential Claims and City Council Legal Requests.

12.2. Receive legal advice pursuant to Texas Government Code Section 551.071 and deliberate pursuant to Texas Government Code Sections 551.087 and 551.072 regarding economic development negotiations in and around the Megasite and consideration and conveyance of assignment and assumption agreements conveying Option to Purchase Real Property Agreements to promote economic development.

13. ACTION RELATIVE TO EXECUTIVE SESSION

13.1. Consideration and possible action related to legal advice received pursuant to Texas Government Code Sec. 551.071 related to Pending Legal Requests, Potential Claims and City Council Legal Requests.

14. ADJOURNMENT

15. CERTIFICATION

I certify that this notice of the Hutto City Council meeting was posted on the City of Hutto website and the City Hall bulletin board of the City of Hutto on May 27, 2022 at 5:00 P.M.

Angela Walton

The City of Hutto is committed to comply with the Americans Disability Act. The Hutto City Council Chamber is wheelchair accessible. Request for reasonable special accommodations must be made 48 hours prior to the meeting. Please email the City Secretary's office at Angela.Walton@huttotx.gov or call (512) 759-4033 for assistance.

AGENDA ITEM REPORT
8.1.

To:	City Council
Subject:	Consideration and possible action on approving the 5/5/22 and 5/19/22 City Council meeting minutes.
Meeting:	Thursday, June 2, 2022
Department:	City Secretary /
Staff Contact:	Angela Walton

BACKGROUND INFORMATION:

SUMMARY OF REQUEST:

Staff requests that City Council approve the minutes of the 5/5/22 and 5/19/22 City Council meeting minutes.

STAFF REVIEW:

FINANCIAL IMPACT:

POLICY IMPLICATIONS:

ATTACHMENTS:

City of Hutto

MINUTES

City Council Meeting
Thursday, May 5, 2022 at 7:00 PM
City Council Chambers

In accordance with the Texas Open Meetings Act this meeting agenda is posted for public information, continuously, for at least 72 hours prior to the scheduled time of the meeting on the bulletin board located on the exterior wall of the City Hall building at 500 West Live Oak, Hutto, Texas. This meeting agenda is also accessible via the Internet at www.huttotx.gov

1. **CALL SESSION TO ORDER**: *7:00 PM*

2. ROLL CALL

Members of City Council present: Mayor Mike Snyder, Councilmember Robin Sutton, Councilmember Mandi Villarreal Salvo, Mayor Pro Tem Dan Thornton, Councilmember Krystal Kinsey, Councilmember Debbie Holland and Councilmember Peter Gordon.

Absent: None

Members of staff present: Issac Turner, Interim City Manager; Matt Wojnowski, Assistant City Manager; Stacy Schmitt, Assistant to City Manager; Angela Walton, Interim City Secretary; Padma Patla, Director of Engineering, Wade Benton, Consultant, Ashley Lumpkin, Executive Director of Business and Development; Cristian Rosas-Grillet, Legal Counsel and Gracie Perez, Assistant City Secretary

3. INVOCATION

4. PLEDGE OF ALLEGIANCE

5. CITY MANAGER COMMENTS
Isaac Turner, Interim City Manager:

The Parks and Recreation Advisory Board has started a butterfly garden at Hutto Lake Park.

Anyone who is interested in participating with that, go to pard@HuttoTx.gov, to get involved. Tomorrow at 6:30 pm here at City Hall, will be the Cowboys and Moms Date night. So if you're inclined to do that, it's something special for Mother's Day weekend. Please come.

We're having another City summer camp, so if you would like to register for that, you can go to our webpage at Huttotx.gov.

And finally, there will be a Sunset Block Party Bash Friday, May 27th from 6:00 pm to 9:00 pm at Fritz Park.

DRAFT

6. PROCLAMATIONS

- May – Motorcycle Safety and Awareness Month – accepted by Jacob Patterson
- Annual Professional Municipal Clerks Week – May 1 – 7, 2022 – accepted by Angela Walton, City Secretary, and Gracie Perez, Assistant City Secretary

7. CITY COUNCIL COMMENTS

7.1. General Comments from City Council

Mandi Villarreal – Salvo:

I just wanted to thank you and City staff, whoever thought of doing that proclamation on motorcycle safety. My father, when I was a teenager was involved in a near-fatal accident. He was a motorcycle rider and almost died. I had a good friend of mine less than a month ago, died on a motorcycle accident here in Austin. As something that we really need to pay attention to and be aware of, his drivers, those were non-motorcycle drivers and that something that I guess just hit home with me tonight. So thank you.

I'd like to say thank you to City Manager Turner for working to expedite the lights on our basketball pavilions and Assistant City Manager Wojnowski. I don't know if I'm saying that right. I'm trying. I know that that's something that was a priority from the Council as well as the community. You all have pushed that forward for the parks that we do have and the pavilion lights. So thank you guys for taking that on and being serious about it.

And secondly, I'd like to let the community, remind you that Black Families of Hutto is starting all their preparations for our Juneteenth Celebration, and its going to be at Adam Orgain Park this year, which is very exciting. We have our park named after our first settler here in Hutto and a slave. We are able to celebrate Juneteenth in that park this year which I think is pretty cool.

And then finally, Happy Cinco De Mayo to all of my family out here in Hutto. This is a celebration primarily in Pueblo, Mexico. The rest of Mexico doesn't really celebrate it, but here in America it's definitely become a celebration of Hispanic culture and heritage, of which I am. And I'm very excited to share that with the rest of the 54% of the Hispanic community here in Hutto. So that's why I'm wearing my attire tonight. If you have any questions, this is actually what I wore when I got engaged. So it's definitely a very exciting day for Hispanic people to share our culture. So thank you. And I hope you all have a fun Cinco De Mayo.

Robin Sutton:

At the last meeting, if those of you kind of hung out or watched the last agenda item, I did call to question something that is to honor City Council expectations. This City Council actually adopted these to date on February 17th, after going through a strategic planning session.

DRAFT

I want taxpayers to know how much they paid for that session, just so they know the magnitude of what we adopted and what we're committing to our citizens. You, the taxpayer, me, the taxpayer and the rest of us paid $14,000 for that two-day facilitator. You also paid for $700 in food. What came of that is our pillars, which we will be sharing more about later.

And I know we kind of shared this and City Manager Turner kind of went through it, but I think maybe the magnitude of what we adopted didn't hit home to the Council members that adopted it.

The first one is discuss respectfully, which is the one I called out. That means take turns. Don't interrupt. Don't use accusatory or inflammatory language, respect someone else's stance to focus on the problem, not the person. Three stay on your sacred ground. Don't shrink. Don't puff up. Three, I'm sorry, four, think before you speak, be responsive, not reactive. Five, no back-channeling. Six, don't go to bed angry after a Council meeting.

I attempted to call attention to item one at our previous meeting after our City Manager was silenced and repeatedly goes on ignored during Council meetings, and disrespectful conversation ensued. It was met by one individual's judgment on what is deemed disrespectful and what isn't with no time to think before they spoke. No other Council member weighed in on it. All seven of us adopted this criteria, but yet I was the only one that stood up finally and said, this is not what we adopted, this is not what the taxpayers paid for.

If we aren't going to take this seriously, and those who are going to take these seats, don't take it seriously, we wasted, what, almost $20,000 of your money. So I just want everybody to know moving forward so when it happens and hopefully other Council members will speak up and say, hey, I'm going to draw attention to number one and number two of your expectations sitting on this Council and the commitment that you've made to the citizens of Hutto.

That's all I got to say. Thank you.

Debbie Holland:

I just want to take this moment to thank you for this opportunity to once again, serve the citizens of Hutto from the dias. This will be my last Council meeting. This is a serious responsibility and I do not take it lightly.

The City of Hutto has had many challenges in the past five years. There is a light at the end of the tunnel, but we must keep our focus on what our responsibility as a Council member is one, there is no room for personal agendas on this dias. This is not a political opportunity. It's about the citizens of Hutto and it is our responsibility to serve them. We have the responsibility to make things right where the City has been broken. If we don't get it right, we will be given the opportunity to face that problem. Again, we are all accountable, past and present Council members, staff, and citizens. Let's not forget our role in this equation. And let's remember where our role as a Council member starts and stops. We hired the City Manager and that manager is responsible for the staff, not us.

DRAFT

I encourage the Council to take every opportunity to continue your training as an elected official. None of us know it all. There is always room for improvement. Social media can be a huge benefit for getting the message out, but equally it is a divisive and detrimental aspect of the world that we live in today. I would caution Council and citizens to be a bit more thoughtful in your words, and in your actions, we are in this together. We will win, or we will lose.

I will step down this evening from this position as the election is on Saturday, but I will not step away. I will continue as a citizen of Hutto and I will continue to work for the success of our community. I will be watching. Thank you.

7.2 City Council Liaison Reports

Robin Sutton:

Yeah, we actually had the opportunity to have an HPC meeting, historic preservation meeting and there is a property at 102 West Pecan street that is actually applying for a certificate of appropriateness. What they want to do is build a new retail structure there, and it was approved. But however, there are expectations that need to continue to happen as far as the facade improvements to make sure it looks appropriate for the area.

And also with the exiting of Mr. Allen, DeAnne Worley was named chair of the HPC.

Krystal Kinsey:

I just wanted to give an update on the community survey on, I believe everything was given the green light, thumbs up. So hopefully we're opening up that here soon. I think that they're going to be due or the deadline is going to be in June. There is quite a bit of the D&I focus on a lot of those questions.

So the D&I chairman sat in on some of those meetings and helped to formulate some of those questions. So I am really excited to see that and kind of what actually comes to that. So I did just want to give an update from that for the diversity inclusion committee. Thank you.

Peter Gordon:

I've got one for a P & Z. They met this past week but just want to announce that we do have a new opening. So Randall Clark has resigned from P & Z. And so we do have an opening. If anyone's interested, I encourage you to apply.

And then also I just was again, impressed with the professionalism and everything that they went through. They're asking really good questions, being very detailed and denying plats when they don't meet the criteria. And they're not afraid to say nope, do it again.

So I thought that it was just very impressive that they're, I think they're working really hard. They're representing the citizens well, representing the City.

DRAFT

8. PUBLIC COMMENT

None.

9. CONSENT AGENDA ITEMS

9.1. Designation of Water and Sewer Certificate of Convenience and Necessity (CCN) Amendments with Jonah Special Utility District (SUD) (Wade Benton, Interim City Manager Isaac Turner)

9.2. Consideration and possible action on Ordinance No. O-2022-018 prescribing certain fees for the City of Hutto, Texas, amending all applicable ordinances and other instruments; providing for a schedule of fees and charges. (First Reading)(Angie Rios)

9.3. Consideration and possible action on Ordinance No. 2022-021 amending Chapter 1, Article 1.07, Division 2, Part II, of the Code of Ordinances to provide for a completeness review period for special event permit applications. (Cristian Rosas- Grillet, Kristi Robich)

9.4. Consideration and possible action on Resolution R-2022-017 authorizing the City to continue its membership with the Atmos Cities Steering Committee to protect the interests of the City of Hutto and protect the interests of the customers of Atmos Energy Corporation, Mid-Tex Division residing and conducting business within the City limits (Matt Wojnowski, Legal)

9.5. Consideration and possible action on Resolution No. 2022-043 condemning bullying and cyberbullying. (Councilmember Robin Sutton)

Councilmember Villarreal Salvo requested pulling Item 9.4 and Councilmember Sutton pulled Item 9.5 from the Consent Agenda.

Councilmember Villarreal Salvo made the motion to approve the balance of the Consent Agenda, and Councilmember Kinsey seconded. Motion passed 7,0.

At this time, Councilmember Sutton requested and motioned moving Item 13.1 from Executive Session up in the agenda. Mayor Snyder seconded. Motion failed 2,5.

9.4. Consideration and possible action on Resolution R-2022-017 authorizing the City to continue its membership with the Atmos Cities Steering Committee to protect the interests of the City of Hutto and protect the interests of the customers of Atmos Energy Corporation, Mid-Tex Division residing and conducting business within the City limits (Matt Wojnowski, Legal)

After brief discussion, Councilmember Gordon made the motion to approve Resolution R-2022-017, and Councilmember Villarreal Salvo seconded. Motion passed 6,1.

DRAFT

9.5 Consideration and possible action on Resolution No. 2022-043 condemning bullying and cyberbullying. (Councilmember Robin Sutton)

Councilmember Sutton read the resolution into the record. Councilmember Sutton made the motion to approve Resolution No. 2022-043, and Councilmember Villarreal Salvo seconded. Motion passed 7,0.

10. RESOLUTIONS

10.1. Consideration and possible action on Resolution No. 2022-041 approving an agreement for Basketball Court Lighting at Hutto Lake Park, Fritz Park, and Hutto Community Park with Musco Sports Lighting, LLC, in an amount not to exceed $106,200.00 through BuyBoard Contract No. 592-19; and authorizing the Interim City Manager to execute the Agreement. (Jeff White, Parks Superintendent)

Councilmember Villarreal Salvo made the motion to approve Resolution No. 2022-041, and Councilmember Thornton seconded. Motion passed 7,0.

10.2 Consideration and possible action on Resolution No. 2022-042 accepting the infrastructure improvements for the Subdivision known as Brooklands Section 5 in the City of Hutto, Williamson County, Texas, Repealing any prior inconsistent resolutions; providing a severability clause and providing an effective date. (Legal) – *Moved to after Executive Session*

Mayor Snyder requested moving up Item 12.2. All were in agreement.

12.2. Presentation and possible action of the Annual Comprehensive Finance Report for the year ended September 30, 2021. (Angie Rios)

BrooksWatson & Co, PLLC, were contracted to perform the audit for fiscal year ending September 30, 2021 and presented the report to City Council.

Councilmember Villarreal Salvo made the motion to accept the audit report with one amendment, and Councilmember Gordon seconded. Motion passed 7,0.

11. ORDINANCES

11.1. Hold a public hearing and consider action for the proposed Planned Unit Development (PUD) zoning ordinance request for the property to be known as Village at Hutto Station Planned Unit Development (PUD), 30.595 acres, more or less, of land, located off of CR 138. The land use proposal is attached and detached multi-family uses. (First Reading) (Ashley Lumpkin)

DRAFT

Public Hearing Opened: 8:48 pm, no public speakers
Public Hearing Closed: 8:48 pm

Councilmember Gordon made the motion to approve, and Councilmember Holland seconded. Motion passed 7,0, and second reading unanimously was waived.

11.2. Consideration and possible action on Ordinance No. O-2022-019 amending the budget for the fiscal year of October 1, 2021 through September 30, 2022, by appropriating and setting aside the necessary funds for additional expenditures, in accordance with existing statutory requirements; finding municipal purposes; providing for a severability clause; and providing for an effective date. (First Reading) (Angie Rios)

Councilmember Villarreal Salvo made the motion to approve Ordinance No. O-2022-019 with a 4 % salary increase for all City employees as well as an additional $13,000 for Human Resources temporary hires, and Councilmember Sutton seconded. Motion passed 7,0.

11.3. Consideration and possible action on Ordinance No. O-2022-020 reimbursing the park rental fees for Hutto Resource Center's 2022 Community Wide Appreciation Picnic in the amount of One Thousand Five Hundred Dollars ($1,500.00). (First Reading) (Cristian Rosas-Grillet)

Councilmember Gordon made the motion to approve Ordinance No. O-2022-020, and Councilmember Holland seconded. Motion passed 7,0, and second reading unanimously was waived.

11.4 Consideration and possible action on Ordinance No. 2022-016 amending Chapter 2, Article 2.03, Division 1 of the Code of Ordinances to adopt the City's classification and compensation plan, as amended. (Second Reading) (Interim City Manager Isaac Turner)

Councilmember Villarreal Salvo made the motion to approve Ordinance No. O-2022-016 with a 4 % salary increase for all City employees, and Councilmember Kinsey seconded. Motion passed 7,0.

12. OTHER BUSINESS:

12.1. Consideration and possible action regarding possible appointments, re-appointments and/or removals to City Boards, Commissions, Task Forces, Economic Development Corporations, Local Government Corporations and Tax Increment Reinvestment Zone Boards, City Council Liaisons, and Area Government appointments.

Public Comment: Randal Clark resigned from Planning and Zoning Commission and Zoning Board of Adjustment.

Cat Skeen was nominated to Emergency Preparedness Task Force.

DRAFT

Councilmember Gordon made the motion to approve Cat Skeen's nomination, and Councilmember Holland seconded. Motion passed 7,0.

12.3. Presentation of the Second Quarter Financial Report for the quarter ending March 31, 2022. (Angie Rios)

Chief Financial Officer Rios provided and overview of the second quarter financial report.

At this time, Mayor Snyder requested moving Executive Session Item 13.5 to open session for discussion, and there were no objections.

13.5. Receive legal advice pursuant to Texas Government Code Sec. 551.071 related to litigation matters and litigation bills of the Russell Rodriguez Hyde Bullock Law Firm representing the City or its former and current officers.

After discussion, Council requested a summary of litigation matters and costs from legal counsel and that the information is linked on the City's website.

13. EXECUTIVE SESSION – Time in: 10:23 pm

13.1. Receive legal advice pursuant to Texas Government Code Sec. 551.071 related to Pending Legal Requests, Potential Claims and City Council Legal Requests.

13.2. Receive legal advice pursuant to Texas Government Code Section 551.071 and deliberate pursuant to Texas Government Code Sections 551.087 and 551.072 regarding economic development negotiations in and around the Megasite and consideration and conveyance of assignment and assumption agreements conveying Option to Purchase Real Property Agreements to promote economic development.

13.3. Receive legal advice pursuant to Texas Government Code Section 551.071 relating to Brooklands Partners, Ltd. v. City of Hutto, Cause No. 22-0500-C425 pending in the 425th Judicial District Court in Williamson County, Texas.

13.4. Receive legal advice pursuant to Texas Government Code Section 551.071 and deliberate regarding economic development pursuant to Texas Government Code Section 551.087 to deliberate the offer of a financial or other incentive to business prospects; including deliberations regarding the purchase, sale, exchange or value of real property pursuant to Texas Government Code Section 551.072.

14. ACTION RELATIVE TO EXECUTIVE SESSION - *Reconvened at 11:42 pm.*

14.1. Consideration and possible action related to legal advice received pursuant to Texas Government Code Sec. 551.071 related to Pending Legal Requests, Potential Claims and City Council Legal Requests.

DRAFT

Mayor Snyder requested future agenda item: invalid and/or illegal use of taxpayer funds by Odis Jones and Bill Bingham for hiring of Larry Gonzales as consultant for The Perfect Game.

Mayor Snyder requested future agenda item: Councilmember Villarreal Salvo's emails for November 17, 2021, November 9, 2021 to City attorneys and staff.

Councilmember Sutton requested future agenda item: waiving of attorney/client privilege demand letter from Hajjar and Peters Law firm dated May 3, 2022.

Councilmember Sutton made the motion to approve, and Councilmember Kinsey seconded.

10.2 Consideration and possible action on Resolution No. 2022-042 accepting the infrastructure improvements for the Subdivision known as Brooklands Section 5 in the City of Hutto, Williamson County, Texas, Repealing any prior inconsistent resolutions; providing a severability clause and providing an effective date.

Councilmember Gordon made the motion to approve, and Mayor Pro Tem Thornton seconded. Motion passed 7,0.

14.2. Consideration and possible action related to legal advice received pursuant to Texas Government Code Section 551.071 relating to Brooklands Partners Ltd. v. City of Hutto, Cause No. 22-0500-C425 pending in the 425th Judicial District Court in Williamson County, Texas.

Councilmember Gordon made the motion to approve, and Mayor Pro Tem Thornton seconded. Motion passed 7,0.

14.3. Consideration and possible action related to legal advice received pursuant to Texas Government Code Section 551.071 and deliberations regarding economic development pursuant to Texas Government Code Section 551.087 to deliberate the offer of a financial or other incentive to business prospects; including deliberations regarding the purchase, sale, exchange or value of real property pursuant to Texas Government Code Section 551.072. *No action.*

14.4. Consideration and possible action related to legal advice received pursuant to Texas Government Code Section 551.071 related to litigation matters and litigation bills of the Russell Rodriguez Hyde Bullock Law Firm representing the City or its former and current officers. *No action.*

15. ADJOURNMENT: 11:56 p.m.

DRAFT

ATTEST:

_____
Mike Snyder, Mayor

_____
Angela Walton, City Secretary

DRAFT

City of Hutto

City Council Meeting
Thursday, May 19, 2022 at 7:00 PM
City Council Chambers

In accordance with the Texas Open Meetings Act this meeting agenda is posted for public information, continuously, for at least 72 hours prior to the scheduled time of the meeting on the bulletin board located on the exterior wall of the City Hall building at 500est Live Oak, Hutto, Texas. This meeting agenda is also accessible via the Internet at huttotx.gov

1. **CALL SESSION TO ORDER –** 7:00 PM
2. **ROLL CALL –** All Councilmembers and Mayor were present including Isaac Turner, Interim City Manager, Angela Walton, City Secretary, Jeffrey Yarbrough, Chief of Police, Members of the Public Works Department, Ashley Lumpkin, Executive Director, Angie Rios, CFO, and Jeff White, Parks Superintendent
3. **INVOCATION**
4. **PLEDGE OF ALLEGIANCE**
5. **CITY MANAGER COMMENTS**

   Isaac Turner, Interim City Manager

   Mr. Mayor, Members of the Council, Members of the Public. Saturday, May the 21st is Hutto Market Days in Downtown Hutto. This new event will be hosted every third Saturday, held every third Saturday and 200 E Street from 9:00 AM to 4:00 PM. The City of Hutto is helping to host the Sunset Block Party at Fritz Park, Friday, May the 27th. The event is from 6:00 to 9:00 PM. Please bring coolers, chairs but no glass. There will be live music, vendors, and children's activities. On Monday, May the 30th, city facilities will be closed for Memorial Day in honor of the nation's fallen. We want to encourage everyone to be careful and safe as they travel and celebrate that holiday. June the 1st, for those who are interested in the downtown and the future of the downtown, there will be a downtown design rodeo which will be a near active way to help design the future of Hutto Downtown. The public is welcome to join these community conversations. The first one will start at 10:00 AM, the second one at 2:00 PM on the 1st, and there will also be some presentations at 5:00 PM at City Hall and an Open House at 6:00 o'clock. And finally, Hutto Juneteenth celebration will be June 18th, from 1230 to 6:00 PM at the Adam Orgain Park and Chief Yarbrough will be the guest speaker. Thank you.

6. **PROCLAMATION**

   6.1. Public Works Week 2022 – Accepted by the Public Works Department

   6.2. National Police Week 2022 – Accepted by the Chief of Police, Jeff Yarbrough and members of The Hutto Police Department

7. **CITY COUNCIL COMMENTS**

   Pursuant to Texas Government Code Sec. 551.0415, a member of the governing body may make an announcement about items of community interest during a meeting of the governing body without given notice of the subject of the announcement. Items of Community Interests include: (1) expressions of thanks, congratulations, or condolence; (2) information regarding holiday schedule; (3) an honorary or salutary recognition of public official, public employee, or other citizen, except that a discussion regarding a change in the status of a person's public office or public employment is not an honorary or salutary recognition of the subdivision; (4) a reminder regarding social, ceremonial, or community event

organized or sponsored by an entity other than the governing body that was attended or is scheduled to be attended by a member of the governing body or an official or employee of the political subdivision; and (5) announcements involving imminent threat to the public health and safety of people in the political subdivision that has arisen after the posting of the agenda.

7.2. General Comments from City Council

Mayor Snyder:
Next, we have City Council comments and I was reminded by Mayor Pro Tem Thornton that prior to 7.1. being done, we have it in our Charter that we can't take action on items until the public has had achance o speak. So , if there's no objections, I'll move 7.1. to after Public Comment. Hearing none we'll move on to item 7.2. General Comments from the Council.

Councilmember Robin Sutton:
I have one. I want to express condolences to the families who lost three young lives at the intersection of Chandler and 1660. It wasn't two months ago when we had a presentation about that intersection and how dangerous it is and before that, there was a meeting with TXDOT. It was on their radar and it was going to be a priority for them. I also expressed condolences to the families of the injured victims. There are other people that were injured too. I'm happy to hear that in an update that we received that TXDOT is moving this light at that intersection up in their priorities. It was already in the design phase so that we can see a light go in there within six to nine months and hopefully we can save some lives during this time. Anyway, I just want to say thank you to the team that reached out and you know is bridging the relationship with TXDOT for the City of Hutto and that we get to move forward in this and in other projects.

Councilmember Krystal Kinsey:
Yes, I have one. If it's OK with the Mayor and the rest of City Council. I'd like to take just a minute to take a moment of silence. This past week, as a nation, we still continue to struggle with racial inequality. Some tragedies that happened in both Buffalo, NY and then Laguna Woods, CA. So, if we can just, I would appreciate if we could just take a moment to reflect on some of those things that have happened and unfortunately continue to happen. (*moment of silence observed)* Thank you for that, thank you guys. In light, not necessarily in light in that but I also wanted to mention what City Manager said Turner said the Juneteenth Event will be happening on June 18th, 12:30 to 6 at Adam Orgain Park. They are actively looking for volunteers, so there's a sign up genius link. So, even if you don't necessarily--can't work the whole day, they need help setting up, closing down, wrapping up so it would be a really great event, especially to have a lot of different Hutto citizens out there to support. I will be there. I'm part of the helping to set up, so, I hope to see a lot of familiar faces there. I also wanted to acknowledge that this is Asian American and Pacific Islander Awareness Month as well, and I'm gonna talk a little bit more about that in my Liaison Report. And I did also want the public to be aware that I have a trip planned to South Carolina for my university reunion, go back to my alma mater, so, I will be absent at the June 2nd meeting. That was all.

Councilmember Randal Clark:
I just wanted to say thank you for the people that elected me to be up here, to be a servant, to serve the City of Hutto for next three years. I'm going to do my due diligence to do everything I can help Hutto grow and be the place it needs to be and do so in an honorable way. I also want to thank my opponent for the campaign that we ran against each other, Ida Weaver. I also want to thank my family for supporting me during this time and my wife to take the kids and the time to be able to serve in this capacity. So, thank you.

Mayor Mike Snyder:
So, I've got an item I'd like to add to the agenda. Coming up, I'll shoot the language over to the City Attorney. So, this past, I guess it has been since first part of May, there were some concerns, I guess someone called disturbing regarding something that happened, so, I think we need to talk about it publicly, it sounds like-- we've spent a lot of legal dollars on it.
The second item entitled consideration, possible action regarding the IBCA Barbecue Cook Off, the Mayor's involvement in the process related to including, but not limited to, the emails, text messages and legal memorandum from and including the City Council, the City Staff and the City Attorney, and to possible interference with Administration, alleged interaction with members of the public, alleged interactions with the City Manager and to release all of the information, completely unredacted. So, I'll give you guys that and you can make sure it's wordsmith to be legal. I'll start off the new session.

Councilmember Krystal Kinsey:
I will be absent for that meeting. I was just wondering, what is your end goal with that?

Mayor Mike Snyder:
We can't debate the item.

Councilmember Krystal Kinsey:
I was asking for a purpose or--

Mayor Mike Snyder:
I think it's pretty clear.

Councilmember Krystal Kinsey
No, it's fine. One hundred percent.

Mayor Mike Snyder:
Alright, that brings us to---unless there's no other general comments from Council, move onto City Council Liaison reports.

7.3. City Council Liaison Reports

Councilmember Krystal Kinsey:
The D&I has scheduled apart from their regularly scheduled meeting (third Tuesday of each month) a special meeting on June 7th at 5:00 PM. They formed a website subcommittee. They also have a few proclamations and acknowledgments that they have put together over the past year. They also passed a code of Ethics for themselves and will be bringing it to Council soon. They have been researching training opportunities and use the $1000.00.

Mayor Mike Snyder:
Members of the EDC (Director and two members of the board)
will be attending a ICSC Convention in Las Vegas beginning Monday morning. On May 26th, at 11:15 AM at Rio, the EDC has invited the entire commercial broker network in the City of Austin metro area. Austin Title Company will be paying for the lunch.

8. PUBLIC COMMENT – Rick Hudson, James Weaver

Any citizen wishing to speak during public comment may do so after completing the required registration form. The purpose of this item is to allow the residents of Hutto and other interested persons an opportunity to address the City Council on agenda issues and on non-agenda issues that are a matter of the jurisdiction of the City Council (i.e., City policy or legislative issues). Non-agenda issues regarding daily operational or administrative matters should be first dealt with at the administrative level by calling City Hall at (512) 759-4839 during business hours. Each person providing public comment will be limited to 3 minutes. Any citizen wishing to speak during public comment may do so after completing the required registration form. Written comments for this meeting may also be sent to comments@huttotx.gov PRIOR to 4:00 pm on 5/19/22. The email must include name, address, phone # and email to be recognized properly. Written comments will be provided to Council.

7.1. Election of Mayor Pro Tem (City Council) – Peter Gordon was nominated as the Mayor Pro Tem.

9. CONSENT AGENDA ITEMS

Councilmember Robin Sutton requested that city staff comment on Items 9.6. and 9.7. first. Matt Wojnowski, Assistant City Manager provided a quick presentation for items 9.6. and 9.7.

9.1. Consideration and possible action on Ordinance No. O-2022-019 amending the budget for the fiscal year of October 1, 2021 through September 30, 2022, by appropriating and setting aside the necessary funds for additional expenditures, in accordance with existing statutory requirements; finding municipal purposes; providing for a severability clause; and providing for an effective date. (Second Reading) (Angie Rios)

9.2. Consideration and possible action on Ordinance No. O-2022-018 prescribing certain fees for the City of Hutto, Texas, amending all applicable ordinances and other instruments; providing for a schedule of fees and charges. (Second Reading)(Angie Rios)

9.3. Consideration and possible action on Ordinance No. O-2022-021 amending Chapter 1, Article 1.07, Division 2, Part II, of the Code of Ordinances to provide for a completeness review period for special event permit applications. (Second Reading) (Cristian Rosas-Grillet, Kristi Robich)

9.4. Consideration and possible action on Resolution No. R-2022-047 approving an agreement for a Restroom at Hutto Community Park with Restroom Facilities LTD for an amount not to exceed $93,616.00 through BuyBoard Contract No. 592-19; and authorizing the Interim City Manager to execute the Agreement. (Jeff White)

9.5. Discussion and possible action on Resolution No. R-2022-048 authorizing the receipt of a grant from the Texas Office of the Governor, Criminal Justice Division, Rifle-Resistant Body Armor Grant Program, to provide funding for the Police Department, to purchase forty-five sets of rifle-resistant body armor for Police Officers, with a total grant value of $85,950. (Chief Jeff Yarbrough)

9.6. Consideration and possible action on Ordinance No. O-2022-022 granting to SiEnergy, its successors and assigns (“Company”), a franchise to construct, maintain, and operate pipelines and equipment in the City of Hutto, Williamson County, Texas, for the transportation, delivery, sale, and distribution of gas in, out of, and through said city for all purposes; reserving municipal authority; providing for indemnity to the municipality and insurance by company; requiring book and record keeping; providing for the payment of a fee or charge for the use of the city rights-of-way; and providing that such fee shall be in lieu of other fees and charges, excepting ad valorem taxes; providing an effective date and term; and repealing all previous gas franchise ordinances. (First

Reading) (Legal)

9.7. Consideration and possible action on Ordinance No. O-2022-023 granting to Universal Natural Gas, LLC (d/b/a Universal Natural Gas, Inc.), its successors and assigns ("Company"), a franchise to construct, maintain, and operate pipelines and equipment in the City of Hutto, Williamson County, Texas, for the transportation, delivery, sale, and distribution of gas in, out of, and through said city for all purposes; reserving municipal authority; providing for indemnity to the municipality and insurance by company; requiring book and record keeping; providing for the payment of a fee or charge for the use of the city rights-of-way; and providing that such fee shall be in lieu of other fees and charges, excepting ad valorem taxes; providing an effective date and term; and repealing all previous gas franchise ordinances. (First Reading) (Legal)

A motion was made by Councilmember Krystal Kinsey to approve allg consent agenda items as presented. Councilmember Randal Clark seconded the motion. The vote passed 7:0.

10. RESOLUTIONS

10.1. Consideration and possible action on Resolution R-2022-045 approving the Second Amendment to the Management Agreement with the YMCA of Greater Williamson County; authorizing the Interim City Manager to execute the Agreement. (Angie Rios)

A motion was made by MPT Peter Gordon to approve as presented. Councilmember Robin Sutton seconded the motion. The vote passed 7:0.

10.2. Consideration and possible action on Resolution No. R-2022-046 amending the City Council rotocol Policy to establish and clarify procedures for appointments, reappointments and/or removals of members of City boards, committees, and commissions. (Councilmember Peter Gordon, Councilmember Krystal Kinsey)

A motion was made by MPT Peter Gordon to approve with the change under item 13 changing City Secretary's Office to City Manager's Office. Councilmember Krystal Kinsey seconded the motion. The motion passed 7:0

11. ORDINANCES

11.1. Hold a public hearing and consider action for the proposed Future Land Use Map revision request for the property known as the Ironwood Tract, 117.64 acres, more or less, of land, located off of Highway 79, from Commercial and High Density Residential to Light Industrial/Business Park. (First Reading) (Ashley Lumpkin)

Public Hearing Open – 8:03 PM, Closed – 8:03 PM

A motion was made by Councilmember Dan Thornton, it was seconded by MPT Peter Gordon. The vote passed 7:0.

11.1. (a) Consideration and possible action on Ordinance No. O-2022-024 to dispense with the second reading pursuant to Hutto City Charter Article 3, Section 3.13 (Legal)

The second reading was dispensed by a motion made by Councilmember Krystal Kinsey, it was seconded by Councilmember Sutton. The vote passed 7:0.

11.2. Hold a public hearing and consider action on Ordinance No. O-2022-025 approving the proposed annexation request for the Ironwood tract, approximately 117.64 acres, more or less, of land, described as being out of the Martin Strouse Survey, Abstract No. 587, in Williamson County, Texas and to establish base zoning as General Commercial (B-2) located off of Highway 79. (First Reading) (Ashley Lumpkin)

Public Hearing Open – 8:09 PM, Closed – 8:09 PM. A motion was made by MPT Peter Gordon, seconded by Councilmember Kolar. The vote passed 7:0.

11.2. (a) Consideration and possible action on Ordinance No. O-2022-025 to dispense with the second reading pursuant to Hutto City Charter Article 3, Section 3.13 (Legal)

The second reading was dispensed by a motion, the motion was made by Councilmember Clark and seconded by MPT Peter Gordon. The vote passed 7:0.

11.3. Hold a public hearing and consider action for the zoning change request for the property known as the Ironwood Tract, 117.64 acres, more or less, of land, located off of Highway 79, from (ETJ) to LI (Light Industrial). (First Reading) (Ashley Lumpkin)

A presentation was given by Amanda Brown.

Public Hearing Open – 8:20 PM, Closed 8:21 PM. A motion was made by Councilmember Krystal Kinsey to approve as presented and seconded by Councilmember Kolar. The motion passed 7:0.

11.3. (a) Consideration and possible action on Ordinance No. O-2022-026 to dispense with the second reading pursuant to Hutto City Charter Article 3, Section 3.13 (Legal)

A motion was made by Councilmember Dan Thornton to dispense of the second reading, the motion was seconded by Councilmember Clark. The vote passed 7:0.

11.4. Hold a public hearing and consider action for UDC Amendment, amending the Code of Ordinances (2020 Edition, as amended), Chapter 4 Section 10.403.3 Lot Dimensions and Area and 10.406.3 Single household detached and two to four household residence design to amend requirements for garage door width and to add language for residential alleys. (First Reading) (Ashley Lumpkin)

Public Hearing Open – 8:30 PM, Closed 8:30 PM. A motion was made by Councilmember Dan Thornton to accept the amendment to Chapter 4, section10.406.3 as presented and not accept the other. The motion was seconded by Councilmember Clark. The motion passed 7:0.

11.4. (a) Consideration and possible action on Ordinance No. O-2022-027 to dispense with the second reading pursuant to Hutto City Charter Article 3, Section 3.13 (Legal)

A motion was made by Councilmember Robin Sutton to dispense with the second reading. The motion was seconded by Councilmember Dan Thornton. The vote passed 6:1. Mayor Mike Snyder opposed.

11.5. Consideration and possible action on Ordinance No. O-2022-015 amending Article 14.03, Noise, of the Code of Ordinances to establish regulations for permits for concrete installation during non-construction hours. (First Reading) (Ashley Lumpkin)

A public comment was made by Bryan Byrd. Following the presentation, a motion was made by Councilmember Krystal Kinsey to approve 11.5. with the amendment of striking “and then only” and replacing with the word “or” in 14.03.003, paragraph 10. The motion was seconded by Councilmember Randal Clark. The vote passed 7:0.

11.5. (a) Consideration and possible action on Ordinance No. O-2022-015 to dispense with the second reading pursuant to Hutto City Charter Article 3, Section 3.13 (Legal)

A motion was made by Councilmember Krystal Kinsey to waive the second reading. The motion was seconded by Councilmember Kolar. The vote passed 7:0.

11.6. Consideration and possible action on Ordinance No. O-2022-028 establishing an Outside Agency Funding Advisory Committee; and providing for related matters. (City Council)

A motion was made by MPT Peter Gordon. The motion was seconded by Councilmember Dan Thornton. The motion passed 7:0. City staff will recommend process to Council.

11.6. (a) Consideration and possible action on Ordinance No. O-2022-028 to dispense with the second reading pursuant to Hutto City Charter Article 3, Section 3.13 (Legal)

No action in 11.6. (a)

12. OTHER BUSINESS

12.1. Consideration and possible action regarding possible appointments, re-appointments and/or removals to City Boards, Commissions, Task Forces, Economic Development Corporations, Local Government Corporations and Tax Increment Reinvestment Zone Boards, City Council Liaisons, and Area Government appointments.

The following appointments were made:

Councilmember Mandi Villarreal Salvo was removed from Cottonwood (Motion by Councilmember Randal Clark, seconded by Councilmember Robin Sutton. Vote 7:0)

MPT Gordon was appointed as Council Liaison to Cottonwood. (Motion by Councilmember Dan Thornton/seconded by Mayor Snyder. Vote 7:0)

Councilmember Amberley Kolar was appointed to Parks and Advisory Board. (Motion by Councilmember Amberley Kolar, seconded by Councilmember Randal Clark. Vote 7:0)

Sutton appointed to P&Z (Motion by Mayor Mike Snyder, seconded by MPT Peter Gordon. Vote 7:0)

MPT Gordon to HPC (Motion by MPT Peter Gordon, seconded by Mayor Mike Snyder. Vote 7:0)

Item 10.2. was recalled by MPT Peter Gordon, seconded by Councilmember Thornton. MPT Peter Gordon amended the City Council Protocols 1 F and G to remove the reference of LGCs. The motion was seconded by Councilmember Dan Thornton. The motion passed 7:0.

12.2. Consideration and possible action to direct staff to amend the TIRZ 2 Project and Financing Plan. (Legal)

A motion was made by Councilmember Dan Thornton directing staff to amend the TIRZ 2 Project and the Finance Plan. The motion was seconded by Councilmember Amberley Kolar. The vote passed 7:0.

13. EXECUTIVE SESSION –

A motion was made by Mayor Mike Snyder to pull items 13.5. and 13.6. out of Executive Session. Councilmember Dan Thornton seconded the motion. The vote failed 2:5. Councilmembers in favor: Councilmember Dan Thornton and Mayor Mike Snyder. Councilmembers opposed: Councilmember Krystal Kinsey, Councilmember Amberley Kolar, Councilmember Dan Thornton, Mayor Pro Tem Peter Gordon, Councilmember Robin Sutton and Councilmember Randal Clark.

Executive Session Entered 9:35 PM.

The City Council for the City of Hutto reserves the right to adjourn into executive session at any time during the course of this meeting to discuss any of the matters listed above as authorized by the Texas Government Code Sections 551.071 (Litigation/Consultation with Attorney), 551.072 (Deliberations regarding real property), 551.073 (Deliberations regarding gifts and donations), 551.074 (Deliberations regarding personnel matters) or 551.076

(Deliberations regarding deployment/implementation of security personnel or devices) and 551.087 (Deliberations regarding Economic Development negotiations).

13.1. Receive legal advice pursuant to Texas Government Code Sec. 551.071 related to Pending Legal Requests, Potential Claims and City Council Legal Requests.

13.2. Receive legal advice pursuant to Texas Government Code Section 551.071 and deliberate pursuant to Texas Government Code Sections 551.087 and 551.072 regarding economic development negotiations in and around the Megasite and consideration and conveyance of assignment and assumption agreements conveying Option to Purchase Real Property Agreements to promote economic development.

13.3. Deliberate the appointment, employment, evaluation, reassignment, or duties of the Interim City Manager pursuant to Texas Government Code Section 551.074, Personnel Matters.

13.4. Receive legal advice pursuant to Texas Government Code Section 551.071 relating to *Brooklands Partners, Ltd. v. City of Hutto,* Cause No. 22-0500-C425 pending in the 425th Judicial District Court in Williamson County, Texas.

13.5. Receive legal advice pursuant to Texas Government Code Section 551.071 relating to releasing McGinnis Lochridge memorandums regarding the hiring of Larry Gonzales as a consultant for the City dated March 4 (x2), 6 (x2), April 1, July 30, 2019 and executed engagement letter March 6, 2019.

13.6. Receive legal advice pursuant to Texas Government Code Section 551.071 relating to waiving the Attorney Client/Attorney Work Product Privilege relating to emails dated November 9 and 17, 2021 from former Council Member Villareal-Salvo to the City Attorney.

13.7. Receive legal advice pursuant to Texas Government Code Section 551.071 and deliberate regarding economic development pursuant to Texas Government Code Section 551.087 to deliberate the offer of a financial or other incentive to business prospects; including deliberations regarding the purchase, sale, exchange or value of real property pursuant to Texas Government Code Section 551.072.

14. ACTION RELATIVE TO EXECUTIVE SESSION

14.1. Consideration and possible action related to legal advice received pursuant to Texas Government Code Sec. 551.071 related to Pending Legal Requests, Potential Claims and City Council Legal Requests.

A motion was made by Mayor Mike Snyder made a motion to release EEOC complaint by James Bryson. The motion was seconded by Councilmember Dan Thornton. Vote passed 7:0.

14.2. Consideration and possible action related to legal advice received pursuant to Texas Government Code Section 551.071 relating to *Brooklands Partners Ltd. v. City of Hutto,* Cause No. 22-0500-C425 pending in the 425th Judicial District Court in Williamson County, Texas.

Dottie Palumbo explained that Plaintiff sued the City of Hutto, he later non-suited. Plaintiff asked for the order to be with prejudice, therefore it cannot be refiled.

14.3. Consideration and possible action related to legal advice received pursuant to Texas Government Code Section 551.071 and deliberations regarding economic development pursuant to Texas Government Code Section 551.087 to deliberate the offer of a financial or other incentive to business prospects; including deliberations regarding the purchase, sale, exchange or value of real property pursuant to Texas Government Code Section 551.072.

No action

14.4. Consideration and possible action related to legal advice pursuant to Texas Government Code Section 551.071 relating to releasing McGinnis Lochridge memorandums regarding the hiring of Larry Gonzales as a consultant for the City dated March 4 (x2), 6 (x2), April 1, July 30, 2019 and executed engagement letter March 6, 2019.

A motion was made by Mayor Mike Snyder to release the memos unredacted. The motion was seconded by Councilmember Robin Sutton. The vote passed 5:2. Councilmember Amberley Kolar and Councilmember Krystal Kinsey opposed.

14.5. Consideration and possible action related to legal advice pursuant to Texas Government Code Section 551.071 relating to waiving the Attorney Client/Attorney Work Product Privilege relating to emails dated November 9 and 17, 2021 from former Council Member Villareal-Salvo to the City Attorney.

A motion was made by Mayor Mike Snyder to release the memo unredacted. Councilmember Dan Thornton seconded the motion. The motion failed 2:5. Councilmember Krystal Kinsey, Councilmember Amberley Kolar, Mayor Pro Tem Peter Gordon, Councilmember Robin Sutton and Councilmember Randal Clark all opposed.

A motion was made by Councilmember Robin Sutton directing Legal to compile the information and release with AG opinion upon receipt. The vote passed 7:0.

15. ADJOURNMENT – 12:01 AM

_____

Mike Snyder, Mayor

_____

Gracie Perez, Assistant City Secretary

AGENDA ITEM REPORT
8.2.

To: City Council
Subject: April 2022 Financial Report (Angie Rios)
Meeting: Thursday, June 2, 2022
Department: Finance /
Staff Contact:

BACKGROUND INFORMATION:

SUMMARY OF REQUEST:

In the month of April, any revenues collected in the General Fund were almost completely wiped out by a large property and sales tax reimbursement on a 380 agreement. General Fund expenditures were on par with previous months. The Utility Fund continued to show an increase in revenues due to new customers, and expenses were right on track with budget.

STAFF REVIEW:

FINANCIAL IMPACT:

POLICY IMPLICATIONS:

ATTACHMENTS:

MONTHLY FINANCIAL AND INVESTMENT REPORT

FOR THE MONTH ENDED APRIL 30, 2022

Angie Rios, CPA
Chief Financial Officer

TABLE OF CONTENTS

Dashboard 1

GENERAL FUND

Sales Tax, Three Year Comparison 4

Statement of Revenues - Budget and Actual 5

Statement of Expenditures - Budget and Actual 6

GENERAL GOVERNMENT SCHEDULES

Statement of Revenues and Expenditures, Budget and Actual

Hotel Motel Fund 9

PEG Capital Fund 9

Park Improvement Fund 9

CDC 9

ENTERPRISE FUNDS

Statement of Revenues and Expenses – Budget and Actual

Water/Wastewater Fund 10

Impact Fees Fund..... 11

Utility CIP Fund..... 11

Solid Waste Fund..... 11

MONTHLY INVESTMENT REPORT

Monthly Investment Report 12

FINANCIAL DASHBOARD FOR THE MONTH ENDING APRIL 30, 2022

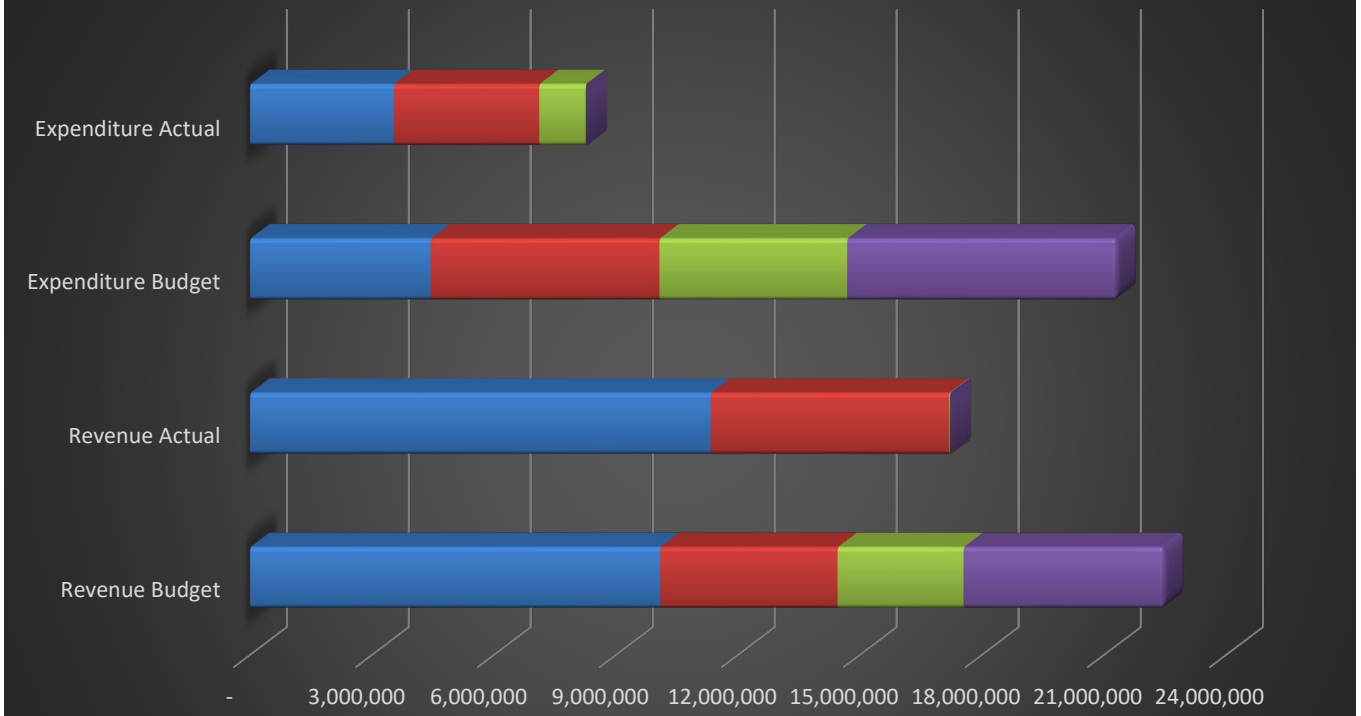

	Revenue Budget	Revenue Actual	Expenditure Budget	Expenditure Actual
Quarter 1	10,086,719	11,332,319	4,446,158	3,537,887
Quarter 2	4,367,538	5,860,482	5,625,403	3,577,569
Quarter 3	3,096,859	19,472	4,616,754	1,144,053
Quarter 4	4,938,782	-	6,636,184	-

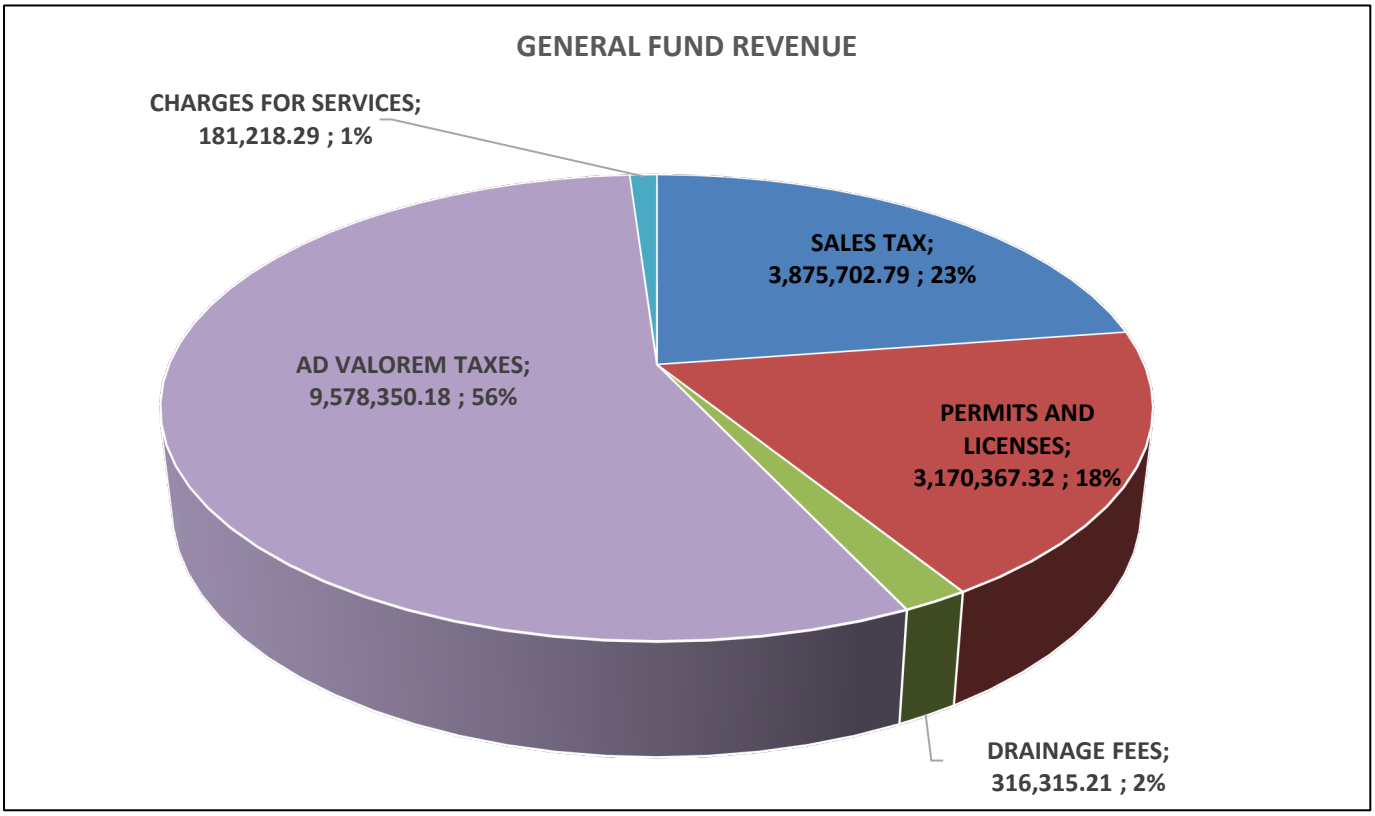

FINANCIAL DASHBOARD FOR THE MONTH ENDING APRIL 30, 2022

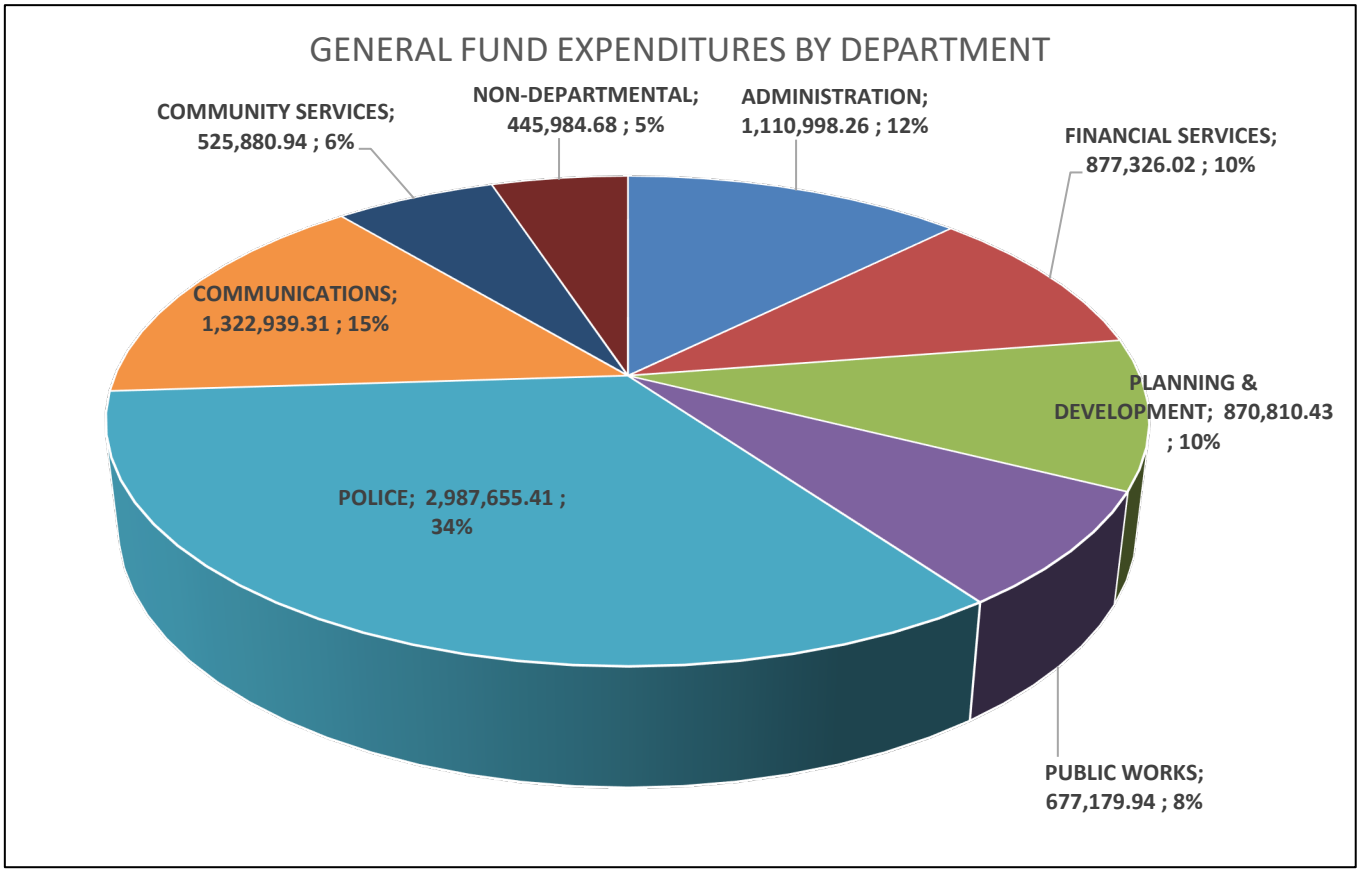

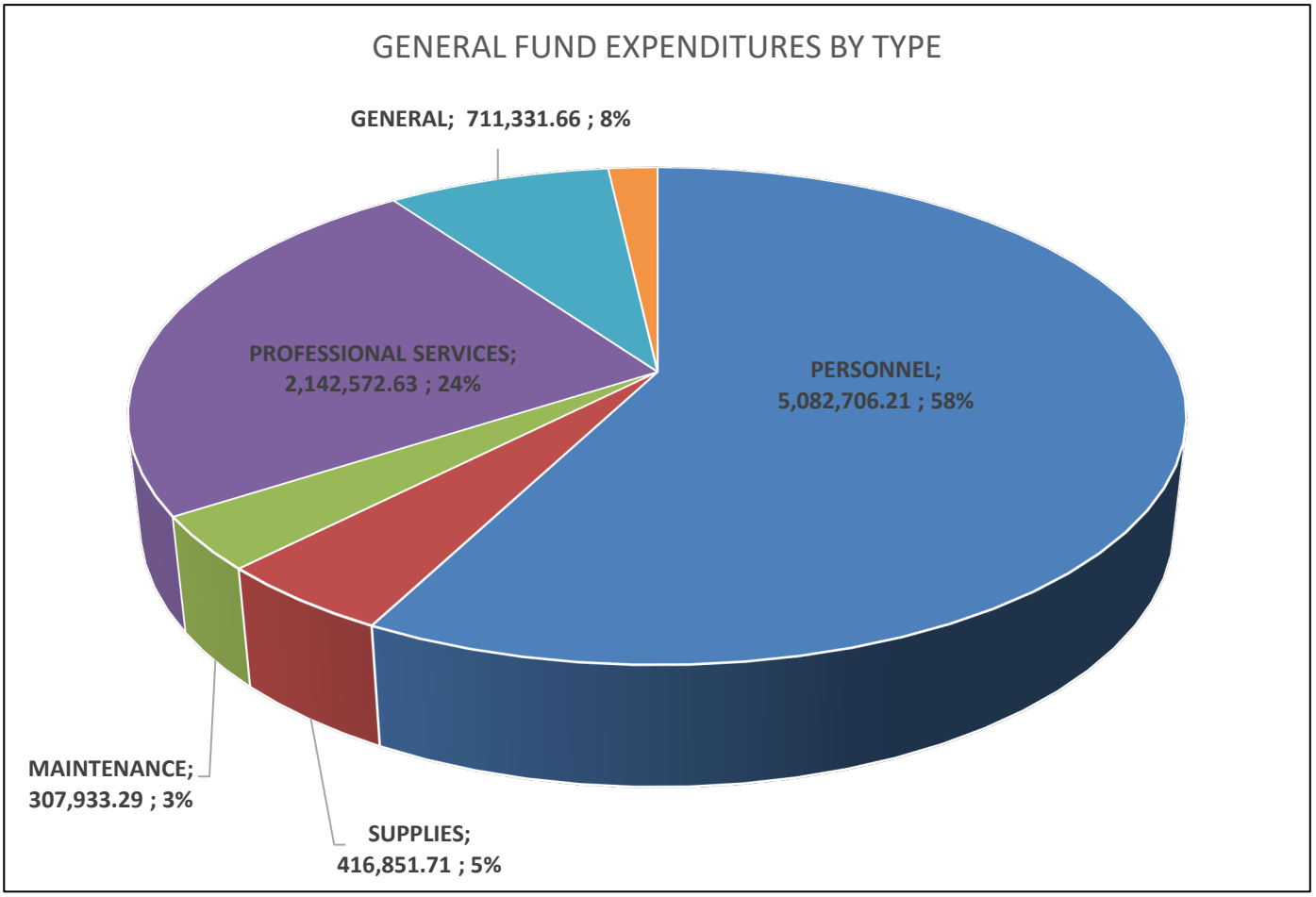

FINANCIAL DASHBOARD FOR THE MONTH ENDING APRIL 30, 2022

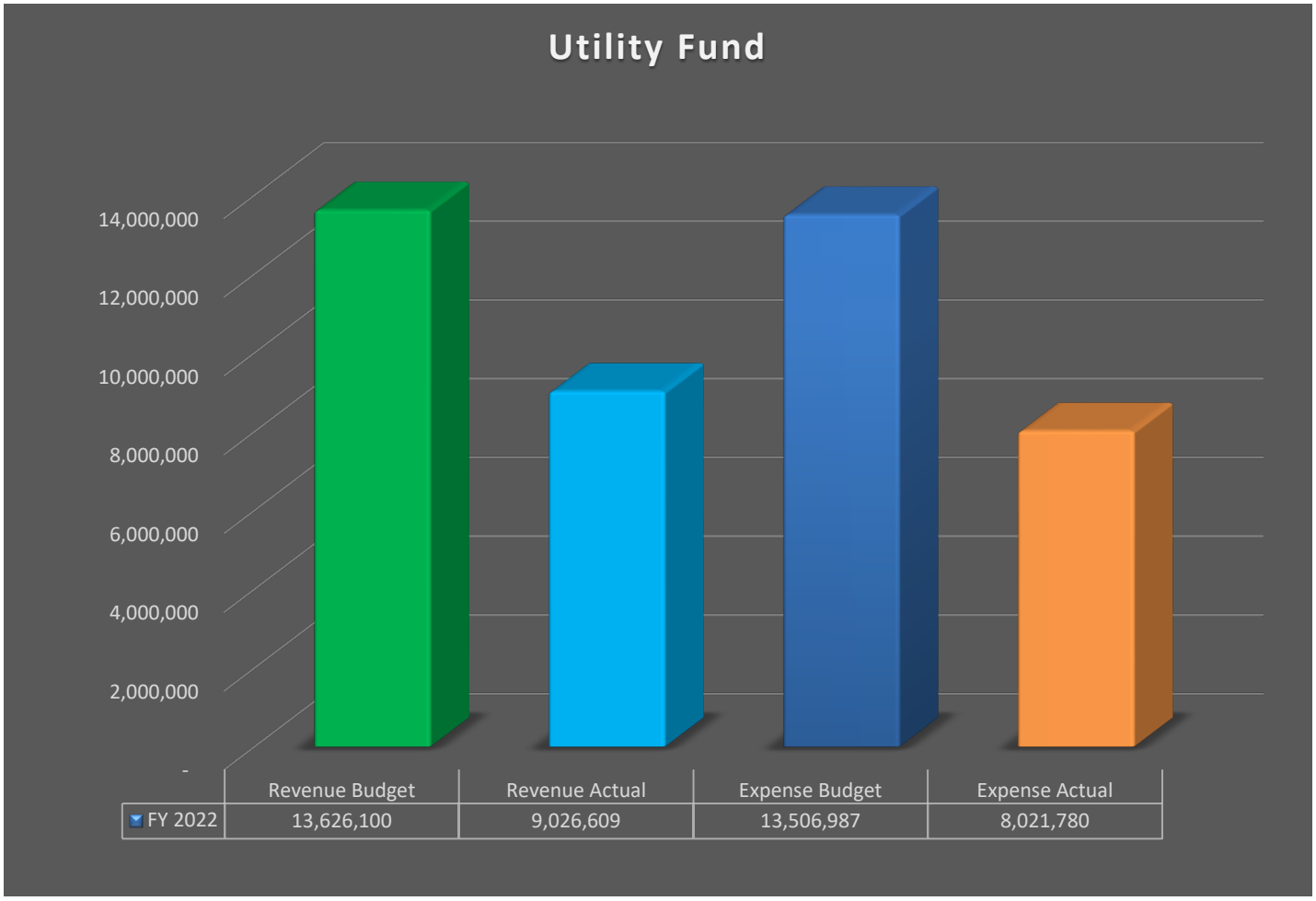

- Utility revenues were at 66.24% of budget
- Expenses were at 59.39% of budget

CITY ONLY Monthly Sales Tax Revenue

Received Month	FY Accrual Month	2018-19 Actual	2019-20 Actual	2020-21 Actual	2021-22 Estimate	2021-22 Actual
December	October	355,906	380,217	460,839	440,696	650,779
January	November	268,005	368,031	531,091	426,572	635,102
February	December	376,485	471,312	602,713	546,281	518,338
March	January	310,216	374,496	475,083	434,064	572,428
April	February	343,422	349,480	395,000	405,070	545,417
May	March	348,258	468,816	687,438	543,387	796,610
June	April	349,284	476,524	578,119	552,322	-
July	May	369,062	501,930	578,444	581,769	-
August	June	426,662	558,000	663,684	646,758	-
September	July	358,298	489,116	644,647	566,917	-
October	August	356,908	471,586	596,256	546,598	-
November	September	422,002	507,797	815,296	588,569	-
% Y-T-D Change		17.3%	26.4%	29.7%	**6,279,002**	**3,718,675**

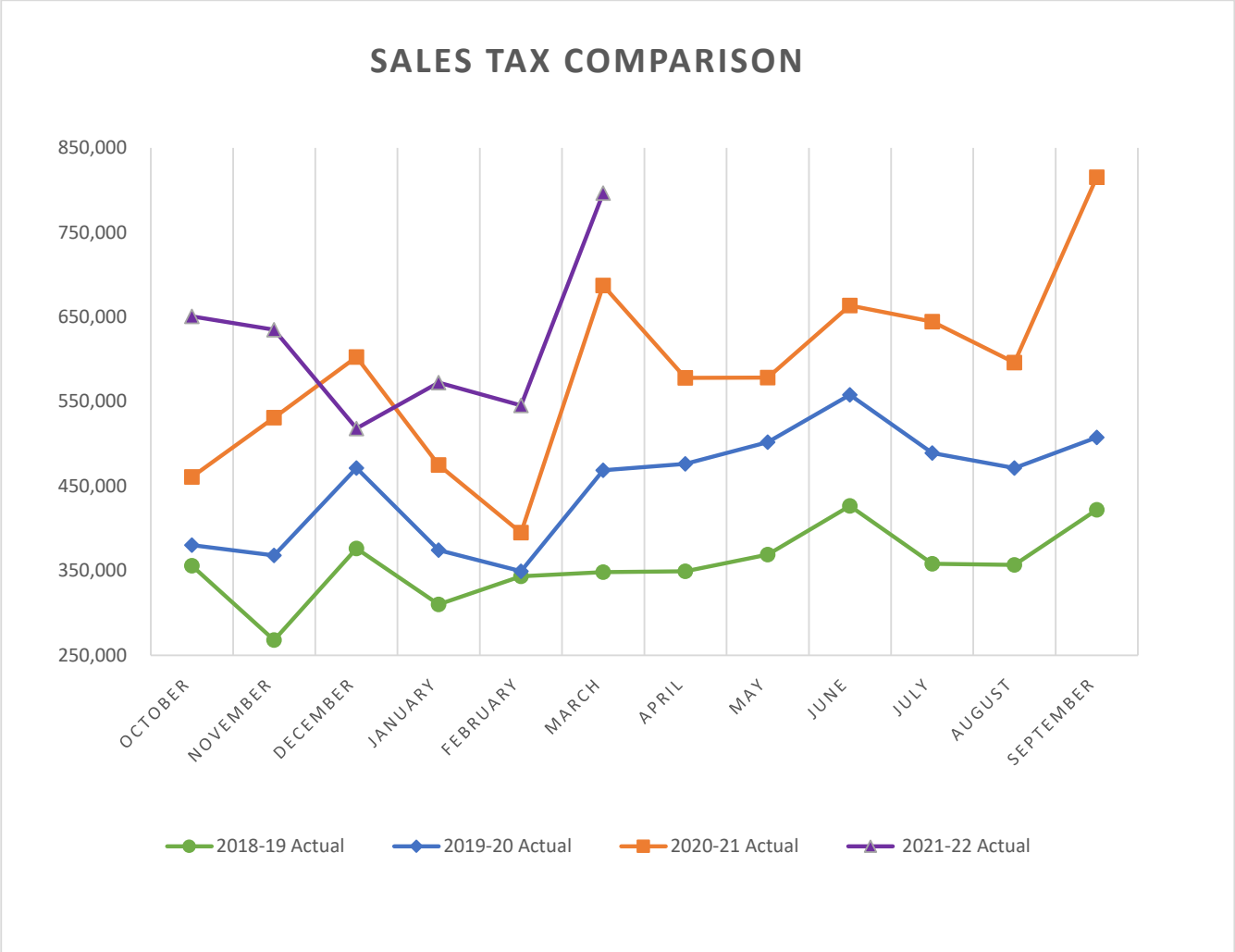

CITY OF HUTTO

GENERAL FUND

STATEMENT OF REVENUES

FOR THE MONTH ENDED APRIL 30, 2022

REVENUES	BUDGET	CURRENT MONTH	FISCAL YTD	VARIANCE FAVORABLE (UNFAVORABLE)	PERCENT OF BUDGET
AD VALOREM TAXES	$ 10,873,091	$ (1,001,166)	$ 9,578,350	$ (1,294,741)	88.09%
SALES TAX	6,229,002	532,597	3,875,703	(2,353,299)	62.22%
FRANCHISE FEES	952,355	14,169	79,317	(873,038)	8.33%
PERMITS AND LICENSES	3,285,200	323,596	3,170,367	(114,833)	96.50%
CHARGES FOR SERVICES	172,250	33,434	181,218	8,968	105.21%
FINES	238,000	28,712	226,130	(11,870)	95.01%
DRAINAGE FEES	450,000	47,202	316,315	(133,685)	70.29%
GRANT REVENUE	-	6,843	26,872	26,872	0.00%
OTHER REVENUES	100,000	21,539	60,312	(39,688)	60.31%
INTEREST	20,000	4,855	7,448	(12,552)	37.24%
SUB - TOTAL	$ 22,319,898	$ 11,780	$ 17,522,033	$ (4,797,865)	78.50%
TRANSFER FROM OTHER FUNDS	275,000	7,692	46,923	(228,077)	17.06%
FUND BALANCE	-	-	-	-	0.00%
TOTAL REVENUES	$ 22,594,898	$ 19,472	$ 17,568,956	$ (5,025,942)	77.76%

GENERAL FUND SUMMARY					
TOTAL REVENUE INCLUDING TRANSFERS	$ 22,594,898	$ 19,472	$ 17,568,956	$ (22,575,426)	77.76%
GENERAL FUND EXPENDITURES	22,171,082	1,144,053	8,818,775	21,027,029	39.78%
BUDGETED FUND BALANCE	-	-	-	-	
BALANCE	$ 423,816	$ (1,124,581)	$ 8,750,181	$ (1,548,397)	

NOTES:

The General Fund accounts for the resources used to finance the fundamental operations of the City.
It is the basic fund of the City and covers all activities for which a separate fund has not been established.

CITY OF HUTTO
GENERAL FUND
STATEMENT OF EXPENDITURES
FOR THE MONTH ENDED APRIL 30, 2022

	CURRENT BUDGET	CURRENT MONTH	FISCAL YTD	VARIANCE FAVORABLE (UNFAVORABLE)	PERCENT OF BUDGET
ADMINISTRATION					
PERSONNEL	$ 799,406	$ 32,016	$ 426,909	$ 372,497	53.40%
SUPPLIES	2,650	-	1,780	870	67.18%
PROFESSIONAL SERVICES	25,050	25,108	138,050	(113,000)	551.10%
GENERAL	17,750	-	11,680	6,070	65.80%
CAPITAL OUTLAY	-	-	-	-	0.00%
TOTAL ADMINISTRATION	$ 844,856	$ 57,124	$ 578,419	$ 266,437	68.46%
CITY COUNCIL					
PERSONNEL	$ 74,942	$ 6,259	$ 40,527	$ 34,416	54.08%
SUPPLIES	2,500	93	1,865	635	74.61%
PROFESSIONAL SERVICES	4,000	-	-	4,000	0.00%
GENERAL	225,600	20,169	134,239	91,361	59.50%
CAPITAL OUTLAY	-	-	-	-	0.00%
TOTAL CITY COUNCIL	$ 307,042	$ 26,521	$ 176,631	$ 130,411	57.53%
HUMAN RESOURCES					
PERSONNEL	$ 331,390	$ 26,586	$ 150,640	$ 180,750	45.46%
SUPPLIES	2,250	46	838	1,412	37.25%
PROFESSIONAL SERVICES	176,700	1,685	75,351	101,349	42.64%
GENERAL	12,100	-	2,729	9,371	22.55%
CAPITAL OUTLAY	-	-	-	-	0.00%
TOTAL HUMAN RESOURCES	$ 522,440	$ 28,318	$ 229,558	$ 292,882	43.94%
ECONOMIC DEVELOPMENT					
PERSONNEL	$ 209,364	$ 14,987	$ 105,776	$ 103,588	50.52%
SUPPLIES	13,350	-	18,148	(4,798)	135.94%
PROFESSIONAL SERVICES	40,000	-	377	39,623	0.94%
GENERAL	10,100	-	2,089	8,011	20.68%
CAPITAL OUTLAY	-	-	-	-	0.00%
TOTAL ECONOMIC DEVELOPMENT	$ 272,814	$ 14,987	$ 126,389	$ 146,424	46.33%
FINANCE					
PERSONNEL	$ 973,770	$ 51,261	$ 374,395	$ 599,375	38.45%
SUPPLIES	7,500	177	5,772	1,728	76.96%
PROFESSIONAL SERVICES	299,250	28,322	140,745	158,505	47.03%
GENERAL	387,600	13,056	215,722	171,878	55.66%
CAPITAL OUTLAY	-	-	-	-	0.00%
TOTAL FINANCE	1,668,120	92,816	736,634	931,486	44.16%
MUNICIPAL COURT					
PERSONNEL	$ 222,428	$ 14,999	$ 122,456	$ 99,972	55.05%
SUPPLIES	1,550	-	1,216	334	78.47%
PROFESSIONAL SERVICES	24,250	100	8,777	15,473	36.19%
GENERAL	20,200	1,134	8,243	11,957	40.81%
CAPITAL OUTLAY	-	-	-	-	0.00%
TOTAL MUNICIPAL COURT	$ 268,428	$ 16,233	$ 140,692	$ 127,736	52.41%
PLANNING & DEVELOPMENT					
PERSONNEL	$ 1,184,585	$ 53,594	$ 412,126	$ 772,459	34.79%
SUPPLIES	27,150	603	5,157	21,993	18.99%
PROFESSIONAL SERVICES	890,550	122,809	448,118	442,432	50.32%
GENERAL	32,150	857	5,409	26,741	16.82%
CAPITAL OUTLAY	40,000	-	-	40,000	0.00%
TOTAL PLANNING & DEVELOPMENT	$ 2,174,435	$ 177,864	$ 870,810	$ 1,303,625	40.05%

CITY OF HUTTO
GENERAL FUND
STATEMENT OF EXPENDITURES
FOR THE MONTH ENDED APRIL 30, 2022

	CURRENT BUDGET	CURRENT MONTH	FISCAL YTD	VARIANCE FAVORABLE (UNFAVORABLE)	PERCENT OF BUDGET
CONSTRUCTION INSPECTION					
PERSONNEL	$ 162,945	$ 13,041	$ 77,623	$ 85,322	47.64%
SUPPLIES	13,500	516	3,392	10,108	25.12%
MAINTENANCE	750	-	-	750	0.00%
PROFESSIONAL SERVICES	10,247	943	5,981	4,266	58.37%
GENERAL	6,000	-	-	6,000	0.00%
CAPITAL OUTLAY	-	-	-	-	0.00%
TOTAL CONSTRUCTION INSPECTION	$ 193,442	$ 14,500	$ 86,996	$ 106,446	44.97%
STREETS & DRAINAGE					
PERSONNEL	$ 771,115	$ 31,129	$ 222,728	$ 548,387	28.88%
SUPPLIES	68,000	3,105	29,049	38,951	42.72%
MAINTENANCE	130,000	5,119	30,353	99,647	23.35%
PROFESSIONAL SERVICES	434,000	1,375	84,026	349,974	19.36%
GENERAL	225,000	17,864	112,434	112,566	0.00%
CAPITAL OUTLAY	1,844,075	5,071	111,595	1,732,480	0.00%
TOTAL STREETS & DRAINAGE	$ 3,472,190	$ 63,663	$ 590,184	$ 2,882,005	17.00%
POLICE					
PERSONNEL	$ 5,212,894	$ 326,767	$ 2,423,200	$ 2,789,694	46.48%
SUPPLIES	486,900	18,384	201,220	285,680	41.33%
MAINTENANCE	18,200	3,051	104,488	(86,288)	574.11%
PROFESSIONAL SERVICES/FEES	273,500	40,123	179,544	93,956	65.65%
GENERAL	114,600	6,677	33,419	81,181	0.00%
CAPITAL OUTLAY	690,000	16,198	45,784	644,216	0.00%
TOTAL POLICE	$ 6,796,094	$ 411,200	$ 2,987,655	$ 3,808,438	43.96%
CITY SECRETARY					
PERSONNEL	$ 218,189	$ 8,382	$ 73,348	$ 144,841	33.62%
SUPPLIES	950	141	198	752	20.87%
PROFESSIONAL SERVICES	120,000	3,442	71,587	48,413	59.66%
GENERAL	6,700	161	2,618	4,082	39.08%
CAPITAL OUTLAY	-	-	-	-	0.00%
TOTAL CITY SECRETARY	$ 345,839	$ 12,126	$ 147,752	$ 198,087	42.72%
COMMUNICATIONS					
PERSONNEL	$ 287,711	$ 16,091	$ 109,804	$ 177,907	38.16%
SUPPLIES	3,200	241	1,858	1,342	58.07%
PROFESSIONAL SERVICES	119,826	8,032	42,893	76,933	35.80%
GENERAL	4,000	-	1,694	2,306	42.35%
CAPITAL OUTLAY	-	-	-	-	0.00%
TOTAL COMMUNICATIONS	$ 414,737	$ 24,363	$ 156,249	$ 258,487	37.67%
LIBRARY					
PERSONNEL	$ 182,182	$ 13,710	$ 86,771	$ 95,411	47.63%
SUPPLIES	50,000	5,730	23,519	26,481	47.04%
PROFESSIONAL SERVICES	4,100	-	2,000	2,100	48.78%
GENERAL	3,500	65	1,919	1,581	54.82%
CAPITAL OUTLAY	-	-	-	-	0.00%
TOTAL LIBRARY	$ 239,782	$ 19,504	$ 114,209	$ 125,573	47.63%
COMMUNITY RELATIONS					
PERSONNEL	$ 173,008	$ 12,640	$ 89,206	$ 83,803	51.56%
SUPPLIES	240,900	39	65,171	175,729	27.05%
PROFESSIONAL SERVICES	430,500	-	261,927	168,573	60.84%
GENERAL	5,000	556	4,137	863	82.74%
CAPITAL OUTLAY	-	-	-	-	0.00%
TOTAL COMMUNITY RELATIONS	$ 849,408	$ 13,235	$ 420,440	$ 428,968	49.50%

CITY OF HUTTO
GENERAL FUND
STATEMENT OF EXPENDITURES
FOR THE MONTH ENDED APRIL 30, 2022

	CURRENT BUDGET	CURRENT MONTH	FISCAL YTD	VARIANCE FAVORABLE (UNFAVORABLE)	PERCENT OF BUDGET
INFORMATION TECHNOLOGY					
PERSONNEL	$ 243,611	$ 12,263	$ 87,033	$ 156,578	35.73%
SUPPLIES	64,600	1,233	34,689	29,911	53.70%
PROFESSIONAL SERVICES	648,200	38,207	361,595	286,605	55.78%
GENERAL	10,600	797	972	9,628	9.17%
CAPITAL OUTLAY	40,000	-	-	40,000	0.00%
TOTAL INFORMATION TECHNOLOGY	$ 1,007,011	$ 52,500	$ 484,289	$ 522,722	48.09%
PARKS MAINTENANCE					
PERSONNEL	$ 409,996	$ 29,042	$ 157,525	$ 252,471	38.42%
SUPPLIES	9,750	1,544	6,745	3,006	69.17%
MAINTENANCE	81,500	724	25,716	55,784	31.55%
PROFESSIONAL SERVICES	260,000	3,332	50,133	209,867	19.28%
GENERAL	25,000	-	-	25,000	0.00%
CAPITAL OUTLAY	-	-	-	-	0.00%
TOTAL PARKS MAINTENANCE	$ 786,246	$ 34,643	$ 240,118	$ 546,128	30.54%
PARKS & RECREATION					
PERSONNEL	$ 91,628	$ 2,483	$ 17,501	$ 74,127	19.10%
SUPPLIES	3,800	332	753	3,047	19.82%
PROFESSIONAL SERVICES	11,500	-	6,011	5,489	52.27%
GENERAL	20,750	2,874	15,500	5,250	74.70%
CAPITAL OUTLAY	-	-	-	-	0.00%
TOTAL PARKS & RECREATION	$ 127,678	$ 5,689	$ 39,765	$ 87,913	31.14%
FLEET MAINTENANCE					
PERSONNEL	$ 77,871	$ 5,848	$ 41,771	$ 36,100	53.64%
SUPPLIES	32,450	127	2,373	30,077	7.31%
MAINTENANCE	130,000	12,816	50,457	79,543	38.81%
PROFESSIONAL SERVICES	5,000	-	1,233	3,767	24.66%
GENERAL	250	-	447	(197)	178.80%
CAPITAL OUTLAY	45,000	-	-	45,000	0.00%
TOTAL FLEET MAINTENANCE	$ 290,571	$ 18,790	$ 96,281	$ 194,290	33.14%
FACILITY MAINTENANCE					
PERSONNEL	$ 183,129	$ 9,131	$ 63,370	$ 119,759	34.60%
SUPPLIES	28,950	2,632	7,367	21,583	25.45%
MAINTENANCE	600,000	60	26,548	573,452	4.42%
PROFESSIONAL SERVICES	88,500	6,400	52,433	36,067	59.25%
GENERAL	2,000	-	-	2,000	0.00%
CAPITAL OUTLAY	-	-	-	-	0.00%
TOTAL FACILITY MAINTENANCE	$ 902,579	$ 18,223	$ 149,717	$ 752,862	16.59%
NON-DEPARTMENTAL					
SUPPLIES	$ 12,000	$ 1,292	$ 5,741	$ 6,259	47.84%
MAINTENANCE	70,371	-	70,371	-	0.00%
PROFESSIONAL SERVICES	350,000	33,912	211,791	138,209	60.51%
GENERAL	255,000	6,550	158,081	96,919	61.99%
CAPITAL OUTLAY	-	-	-	-	0.00%
TOTAL NON-DEPARTMENTAL	$ 687,371	$ 41,754	$ 445,985	$ 241,386	64.88%
TOTAL EXPENDITURES	$ 22,171,082	$ 1,144,053	$ 8,818,775	$ 13,352,307	39.78%

CITY OF HUTTO
SPECIAL REVENUE FUNDS
STATEMENT OF REVENUES AND EXPENDITURES
FOR THE MONTH ENDED APRIL 30, 2022

	CURRENT BUDGET	CURRENT MONTH	FISCAL YTD	VARIANCE FAVORABLE (UNFAVORABLE)	PERCENT OF BUDGET
HOTEL TAX FUND					
REVENUES	$ 175,000	$ 14,553	$ 116,739	$ (58,261)	66.71%
EXPENDITURES	175,000	-	-	175,000	0.00%
BUDGETED FUND BALANCE	-	-	-	-	
NET CHANGE	$ -	$ 14,553	$ 116,739	$ 116,739.41	
PEG CAPITAL FUND					
REVENUES	$ 70,000	$ -	$ 11,326	$ (58,674)	16.18%
EXPENDITURES	45,000	-	42,436	2,564	94.30%
BUDGETED FUND BALANCE	-	-	-	-	
NET CHANGE	$ 25,000	$ -	$ (31,110)	$ (56,110)	
PARK IMPROVEMENT FUND					
REVENUES	$ 251,500	$ -	$ 340,786	$ 89,286	135.50%
EXPENDITURES	1,000,000	-	-	1,000,000	0.00%
BUDGETED FUND BALANCE	-	-	-	-	
NET CHANGE	$ 1,251,500	$ -	$ 340,786	$ 1,089,286	
COMMUNITY PID FEES					
REVENUES	$ -	$ -	$ 2,376,179	$ 2,376,179	0.00%
EXPENDITURES	-	-	-	-	0.00%
BUDGETED FUND BALANCE	-	-	-	-	
NET CHANGE	$ -	$ -	$ 2,376,179	$ 2,376,179	
COMMUNITY DEVELOPMENT CORPORATION					
REVENUES	$ 2,307,651	$ 431,521	$ 2,035,193	$ (272,458)	88.19%
EXPENDITURES	2,644,086	48,266	1,135,740	1,508,346	42.95%
BUDGETED FUND BALANCE	-	-	-	-	
NET CHANGE	$ (336,435)	$ 383,255	$ 899,453	$ (1,780,804)	

CITY OF HUTTO

UTILITY FUND

STATEMENT OF REVENUES & EXPENSES

FOR THE MONTH ENDED APRIL 30, 2022

	BUDGET	CURRENT MONTH	FISCAL YTD	VARIANCE FAVORABLE (UNFAVORABLE)	PERCENT OF BUDGET
REVENUES					
CHARGES FOR SERVICES	$ 13,480,000	$ 1,166,162	$ 8,309,351	$ (5,170,649)	61.64%
FEES	131,000	13,459	113,766	(17,234)	86.84%
OTHER REVENUES	15,000	18,773	602,543	587,543	4016.95%
INTEREST	100	-	949	849	948.80%
SUB - TOTAL	$ 13,626,100	$ 1,198,393	$ 9,026,609	$ (4,599,491)	66.24%
TRANSFER FROM OTHER FUNDS	-	-	-	-	0.00%
FUND BALANCE	-	-	-	-	0.00%
TOTAL REVENUES	$ 13,626,100	$ 1,198,393	$ 9,026,609	$ (4,599,491)	66.24%
EXPENSES					
UTILITY BILLING					
PERSONNEL	$ 413,422	$ 24,374	$ 149,601	$ 263,820	36.19%
SUPPLIES	132,350	41,092	97,466	34,884	73.64%
MAINTENANCE	2,000	-	120	1,880	6.00%
PROFESSIONAL SERVICES	63,000	16,704	54,632	8,368	86.72%
GENERAL	322,000	23,100	211,978	110,022	65.83%
CAPITAL OUTLAY	60,000	-	46,400	60,000	77.33%
TOTAL UTILITY BILLING	$ 992,772	$ 105,270	$ 560,198	$ 478,974	56.43%
PUBLIC WORKS ADMIN					
PERSONNEL	$ 526,481	$ 27,361	$ 149,094	$ 377,387	28.32%
SUPPLIES	10,500	443	4,207	6,293	40.06%
PROFESSIONAL SERVICES	-	-	-	-	0.00%
GENERAL	1,600	27	131	1,469	8.18%
CAPITAL OUTLAY	-	-	-	-	0.00%
TOTAL PUBLIC WORKS ADMIN	$ 538,581	$ 27,831	$ 153,431	$ 385,150	28.49%
UTILITY OPERATIONS					
PERSONNEL	$ 833,710	$ 64,543	$ 468,450	$ 365,260	56.19%
SUPPLIES	212,250	27,009	112,397	99,853	52.96%
MAINTENANCE	468,000	4,161	112,840	355,160	24.11%
PROFESSIONAL SERVICES	3,397,500	534,550	2,257,039	1,140,461	66.43%
GENERAL	394,500	23,317	208,136	186,364	52.76%
CAPITAL OUTLAY	275,000	-	429,864	(154,864)	156.31%
TOTAL UTILITY OPERATIONS	$ 5,580,960	$ 653,580	$ 3,588,726	$ 1,992,233	64.30%
NON-DEPARTMENTAL					
PROFESSIONAL SERVICES	$ 75,000	$ 13,913	$ 37,457	$ 37,543	49.94%
GENERAL	110,000	8,523	59,658	50,342	54.23%
TRANSFERS TO OTHER FUNDS	6,209,675	517,473	3,622,310	2,587,365	58.33%
TOTAL NON-DEPARTMENTAL	$ 6,394,675	$ 539,908	$ 3,719,425	$ 2,675,250	58.16%
TOTAL EXPENSES	$ 13,506,987	$ 1,326,589	$ 8,021,780	$ 5,531,607	59.39%
NET CHANGE IN FUND BALANCE	**$ 119,113**	**$ (128,196)**	**$ 1,004,828**	**$ (932,116)**	

CITY OF HUTTO
UTILITY FUNDS
STATEMENT OF REVENUES AND EXPENSES
FOR THE MONTH ENDED APRIL 30, 2022

	CURRENT BUDGET	CURRENT MONTH	FISCAL YTD	VARIANCE FAVORABLE (UNFAVORABLE)	PERCENT OF BUDGET
UTILITY IMPACT FEES FUND					
REVENUES	$ 3,800,000	$ 308,932	$ 8,957,436	$ 5,157,436	235.72%
EXPENSES	2,192,000	151,857	901,857	1,290,143	41.14%
BUDGETED FUND BALANCE	-	-	-	-	
NET CHANGE	$ 1,608,000	$ 157,075	$ 8,055,579	$ 6,447,579	
UTILITY CIP FUND					
REVENUES	$ 50,000	$ -	$ 2,461	$ (47,539)	4.92%
EXPENSES	7,311,192	2,630,437	165,351	7,145,841	2.26%
BUDGETED FUND BALANCE	5,755,192	-	-	(5,755,192)	
NET CHANGE	$ (1,506,000)	$ (2,630,437)	$ (162,889)	$ 1,343,111	
SOLID WASTE FUND					
REVENUES	$ 2,000,000	$ 184,769	$ 1,335,382	$ (664,618)	66.77%
EXPENSES	2,000,000	163,986	954,424	1,045,576	47.72%
BUDGETED FUND BALANCE	-	-	-	-	
NET CHANGE	$ -	$ 20,784	$ 380,958	$ 380,958	

INVESTMENT PORTFOLIO REPORT

For the Month Ended

April 30, 2022

Prepared by
Valley View Consulting, L.L.C.

The investment portfolio of the City of Hutto is in compliance with the Public Funds Investment Act and the Investment Policy and Strategies.

Angie Rios

Chief Financial Officer

Controller

These reports were compiled using information provided by the City. No procedures were performed to test the accuracy or completeness of this information. The market values included in these reports were obtained by Valley View Consulting, L.L.C. from sources believed to be accurate and represent proprietary valuation. Due to market fluctuations these levels are not necessarily reflective of current liquidation values. Yield calculations are not determined using standard performance formulas, are not representative of total return yields and do not account for investment advisor fees.

Summary

Month End Results by Investment Category:

Asset Type	March 31, 2022 Book Value	March 31, 2022 Market Value	April 30, 2022 Book Value	April 30, 2022 Market Value	Ave. Yield
Bank Deposits	$ 8,235,355	$ 8,235,355	$ 5,765,994	$ 5,765,994	0.00%
MMF Sweep/MMA	1,873,416	1,873,416	1,873,630	1,873,630	0.32%
LGIPs	62,583,218	62,583,218	62,632,746	62,632,746	0.33%
Totals	**$ 72,691,990**	**$ 72,691,990**	**$ 70,272,371**	**$ 70,272,371**	

Average Yield - Current Month (1)	
Total Portfolio	0.31%
Rolling Three Month Treasury	0.51%
Rolling Six Month Treasury	0.55%

Fiscal Year-to-Date Average Yield (2)	
Total Portfolio	0.07%
Rolling Three Month Treasury	0.18%
Rolling Six Month Treasury	0.20%
TexPool	0.10%

Interest Earnings		
Monthly Interest Income	$ 17,368	Approximate
Year-to-date Interest Income	$ 30,394	Approximate

(1) Average Yield calculated using month end report yields and adjusted book values and does not reflect a total return analysis or account for advisory fees.

(2) Fiscal Year-to-Date Average Yields calculated using month end report yields and adjusted book values and does not reflect a total return analysis or account for advisory fees.

Note: Portfolio values within this report prior to January 1, 2019 were obtained from previous monthly reports prepared on behalf of the City and were not checked for accuracy or completeness.

Economic Overview

4/30/2022

The Federal Open Market Committee (FOMC) raised the Fed Funds target range 0.50% to 0.75% - 1.00% May 4th (Effective Fed Funds are trading +/-0.80%). The FOMC will begin reducing their balance sheet June 1. Chair Powell implied additional 0.50% increases after each of the June and Julymeetings. First Quarter GDP preliminary estimate was a disappointing -1.4%. May Non-Farm Payroll added 428k net new jobs while the Three Month Average NFP declined to 523k. Crude oil exceeded +/-$105 per barrel. The Stock Markets remain volatile and drifted lower (S&P Index -13% from the peak). More domestic and international economic indicators softened with some economists considering recessionary conditions in the next 12 to 24 months. Inflation remained well over the FOMC 2% target (Core PCE +/-5.2%).

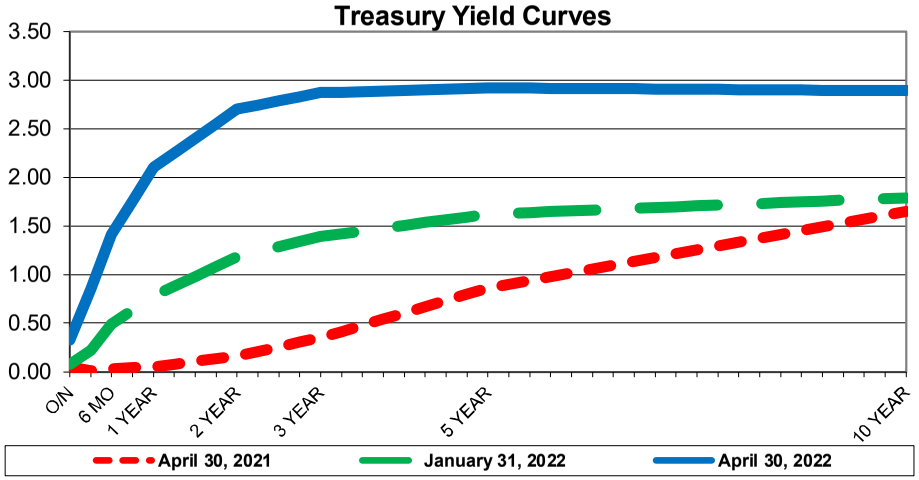

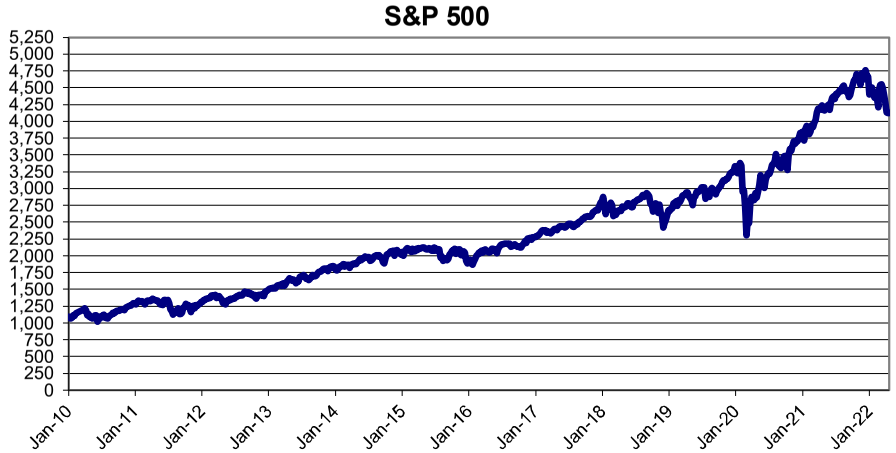

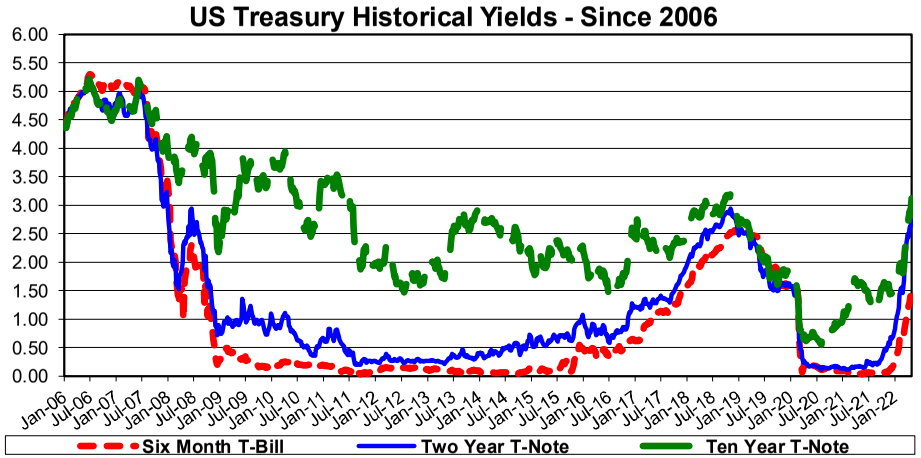

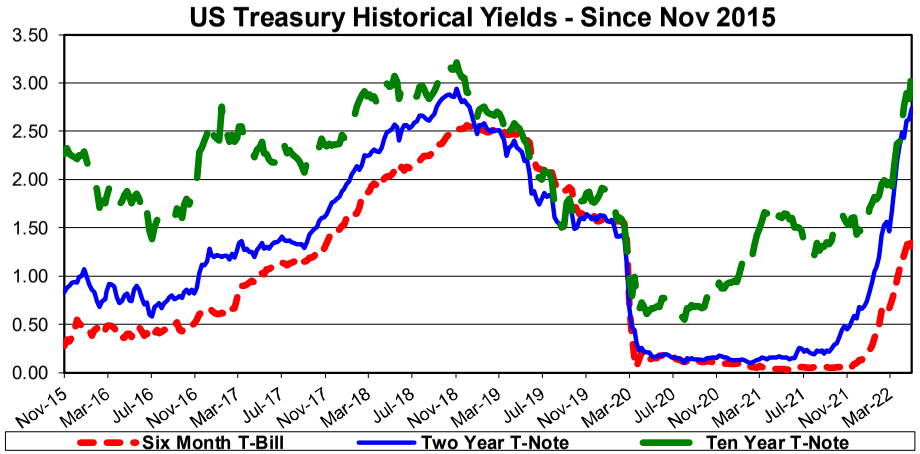

Investment Holdings

April 30, 2022

Description	Ratings	Coupon/ Discount	Maturity Date	Settlement Date	Par Value	Book Value	Market Price	Market Value	Life (days)	Yield
Wells Fargo Bank		0.00%	05/01/22	04/30/22	$ 5,559,579	$ 5,559,579	1.00	$ 5,559,579	1	0.00%
Bancorp South		0.10%	05/01/22	04/30/22	206,415	206,415	1.00	206,415	1	0.10%
Bank of Texas MMF		0.32%	05/01/22	04/30/22	1,873,630	1,873,630	1.00	1,873,630	1	0.32%
TexPool	AAAm	0.30%	05/01/22	04/30/22	20,257,815	20,257,815	1.00	20,257,815	1	0.30%
Texas Class	AAAm	0.47%	05/01/22	04/30/22	6,880,746	6,880,746	1.00	6,880,746	1	0.47%
TexSTAR	AAAm	0.32%	05/01/22	04/30/22	35,494,185	35,494,185	1.00	35,494,185	1	0.32%
					$ 70,272,371	**$ 70,272,371**		**$ 70,272,371**	**1**	**0.31%**
									(1)	**(2)**

(1) Weighted average life - For purposes of calculating weighted average life, bank accounts, pools and money market funds are assumed to have an one day maturity.

(2) Weighted average yield to maturity - The weighted average yield to maturity is based on adjusted book value, realized and unrealized gains/losses and investment advisory fees are not considered. The yield for the reporting month is used for bank accounts, pools and money market funds.

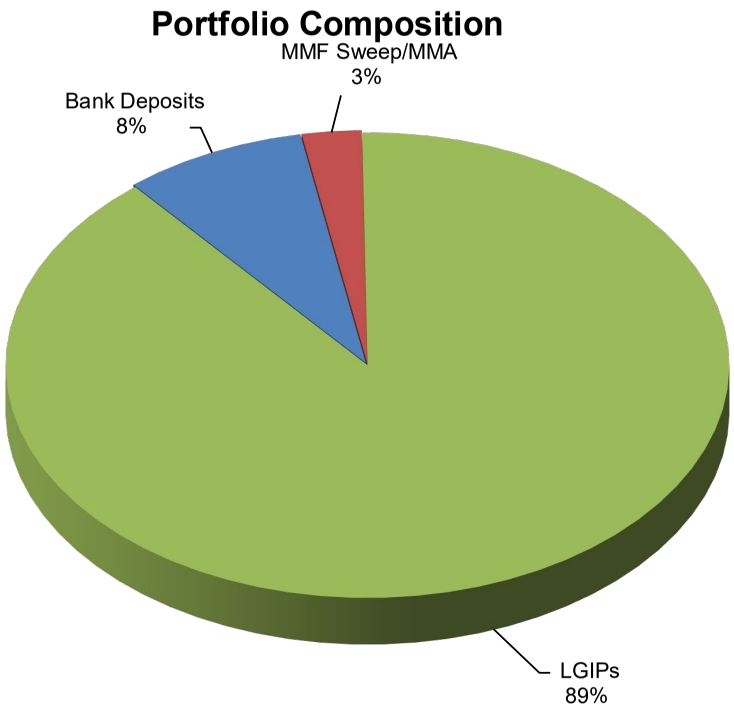
Portfolio Composition
MMF Sweep/MMA
3%
Bank Deposits
8%
LGIPs
89%

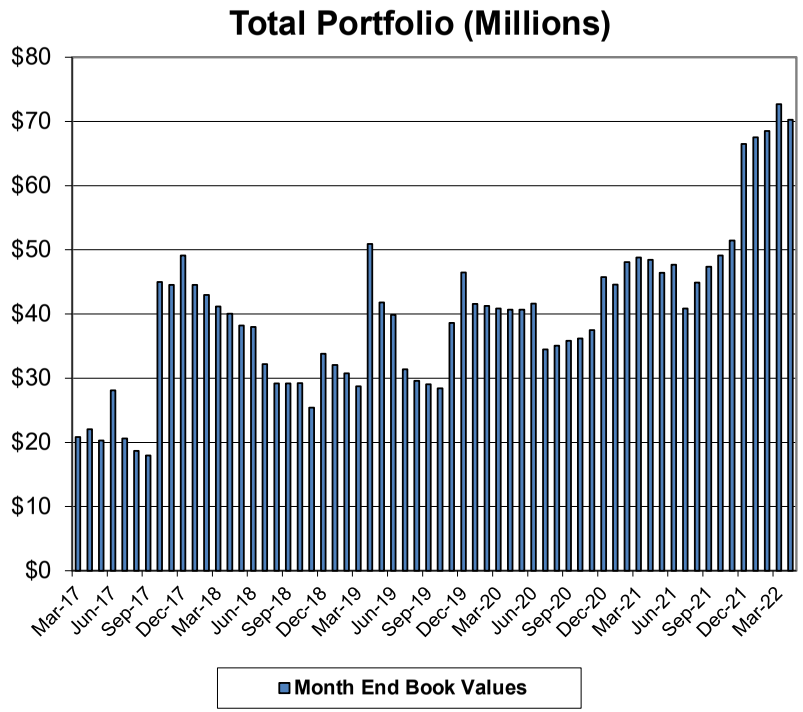
Total Portfolio (Millions)
$80
$70
$60
$50
$40
$30
$20
$10
$0
Mar-17
Jun-17
Sep-17
Dec-17
Mar-18
Jun-18
Sep-18
Dec-18
Mar-19
Jun-19
Sep-19
Dec-19
Mar-20
Jun-20
Sep-20
Dec-20
Mar-21
Jun-21
Sep-21
Dec-21
Mar-22
Month End Book Values

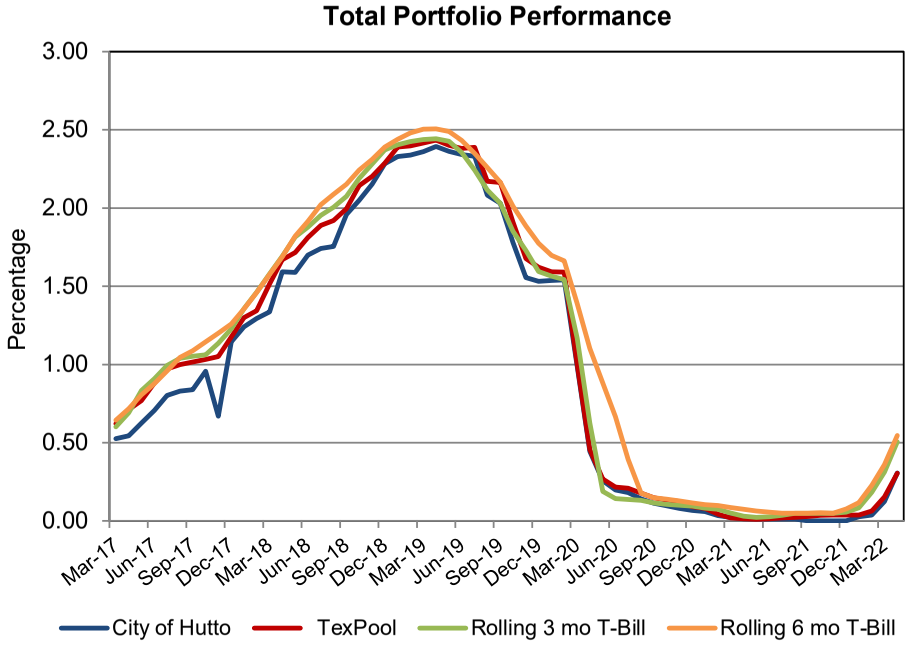
Total Portfolio Performance
Percentage
3.00
2.50
2.00
1.50
1.00
0.50
0.00
Mar-17
Jun-17
Sep-17
Dec-17
Mar-18
Jun-18
Sep-18
Dec-18
Mar-19
Jun-19
Sep-19
Dec-19
Mar-20
Jun-20
Sep-20
Dec-20
Mar-21
Jun-21
Sep-21
Dec-21
Mar-22
City of Hutto
TexPool
Rolling 3 mo T-Bill
Rolling 6 mo T-Bill

Book & Market Value Comparison

Issuer/Description	Yield	Maturity Date	Book Value 03/31/22	Increases	Decreases	Book Value 04/30/22	Market Value 03/31/22	Change in Market Value	Market Value 04/30/22
Wells Fargo Bank	0.00%	05/01/22	$ 8,028,957	$ –	$ (2,469,378)	$ 5,559,579	$ 8,028,957	$ (2,469,378)	$ 5,559,579
Bancorp South	0.10%	05/01/22	206,398	17	–	206,415	206,398	17	206,415
Bank of Texas MMF	0.32%	05/01/22	1,873,416	214	–	1,873,630	1,873,416	214	1,873,630
TexPool	0.30%	05/01/22	20,220,363	37,452	–	20,257,815	20,220,363	37,452	20,257,815
Texas Class	0.47%	05/01/22	6,878,077	2,669	–	6,880,746	6,878,077	2,669	6,880,746
TexSTAR	0.32%	05/01/22	35,484,778	9,407	–	35,494,185	35,484,778	9,407	35,494,185
TOTAL / AVERAGE	**0.31%**		**$ 72,691,990**	**$ 49,759**	**$ (2,469,378)**	**$ 70,272,371**	**$ 72,691,990**	**$ (2,419,619)**	**$ 70,272,371**

Fund Allocation - Book & Market Value
April 30, 2022

	Total	Operating Funds	Debt Service	Capital Projects	Grant Funds	PID Funds	Utility Funds	2014 TWDB
Wells Fargo Bank	$ 5,559,579	$ 5,559,579						
Bancorp South	206,415	206,415						
Bank of Texas MMF	1,873,630							1,873,630
TexPool	20,257,815	20,257,815						
Texas Class	6,880,746					2,877,295	4,003,450	
TexSTAR	35,494,185	5,590,572	1,091,235	25,348,519	3,463,860			
Total	**$ 70,272,371**	**$ 31,614,381**	**$ 1,091,235**	**$ 25,348,519**	**$ 3,463,860**	**$ 2,877,295**	**$ 4,003,450**	**$ 1,873,630**

Fund Allocation - Book & Market Value
March 31, 2022

	Total	Operating Funds	Debt Service	Capital Projects	Grant Funds	PID Funds	Utility Funds	2014 TWDB
Wells Fargo Bank	$ 8,028,957	$ 8,028,957						
Bancorp South	206,398	206,398						
Bank of Texas MMF	1,873,416							1,873,416
TexPool	20,220,363	20,220,363						
Texas Class	6,878,077					2,876,179	4,001,898	
TexSTAR	35,484,778	5,589,090	1,090,946	25,341,800	3,462,942			
Total	**$ 72,691,990**	**$ 34,044,808**	**$ 1,090,946**	**$ 25,341,800**	**$ 3,462,942**	**$ 2,876,179**	**$ 4,001,898**	**$ 1,873,416**

AGENDA ITEM REPORT
8.3.

To:	City Council
Subject:	Consideration and possible action on Resolution No. R-2022-056 approving a contract for wireless internet services at Brushy Creek Amphitheatre with Charter Communications Operating, LLC (Spectrum) (David Reeves)
Meeting:	Thursday, June 2, 2022
Department:	Communications /
Staff Contact:	David Reeves

BACKGROUND INFORMATION:

We currently have service from Lumen (formerly CenturyLink) and pay an average of $3900 monthly for the service, which has not been reliable at times. We are no longer bound to that contract, as the term has expired. We received a quote from Spectrum to provide us service at a rate of $1659 monthly. This will save us close to $80,000 over the next 3 years.

SUMMARY OF REQUEST:

We advise this contract be approved and executed.

STAFF REVIEW:

FINANCIAL IMPACT:

The current budget is $48000 annually, in line item 10-060-030-6413. New contract will be $19908 annually for a savings of $28092 annually for 3 years.

POLICY IMPLICATIONS:

ATTACHMENTS:

RESOLUTION NO. R-2022-

A RESOLUTION OF THE CITY OF HUTTO, TEXAS, APPROVING A SERVICE ORDER BETWEEN THE CITY OF HUTTO AND CHARTER COMMUNICATIONS OPERATING, LLC; AUTHORIZING THE CITY MANAGER TO EXECUTE THE AGREEMENT; AND PROVIDING AN EFFECTIVE DATE

WHEREAS, the City Council desires to approve a Service Order between the City of Hutto and Charter Communication Operating, LLC, and authorize the City Manager to execute the Service Order (the "Agreement") attached as Exhibit "A."

NOW, THEREFORE, BE IT RESOLVED BY THE CITY COUNCIL OF THE CITY OF HUTTO, TEXAS, THAT:

SECTION 1: The findings set forth in the recitals of this Resolution are hereby found to be true and correct and are hereby adopted as findings of the City Council and are incorporated into the body of this Resolution as if fully set forth herein.

SECTION 2: The Hutto City Council hereby approves and authorizes the City Manager to execute the Service Order, attached as Exhibit "A", a copy of the same being attached hereto and incorporated herein for all purposes.

SECTION 3: The City Council hereby finds and declares that written notice of the date, hour, place, and subject of the meeting at which this Resolution was adopted was posted and that such meeting was open to the public as required by law at all times during which this Resolution and the subject matter hereof were discussed, considered and formally acted upon, all as required by the Open Meetings Act, Chapter 551, Texas Government Code, as amended.

RESOLVED this 2nd day of June, 2022.

_____
Mike Snyder, Mayor

ATTEST:

_____
Angela Walton, City Secretary

APPROVED AS TO FORM:

By:_____
Cristian Rosas-Grillet, Assistant City Attorney

EXHIBIT “A”

SERVICE ORDER

THIS SERVICE ORDER ("Service Order"), is executed and effective upon the date of the signature set forth in the signature block below ("Effective Date") and is by and between Charter Communications Operating, LLC on behalf of those operating subsidiaries providing the Service(s) hereunder ("Spectrum") and Customer (as shown below) and is governed by and subject to the Spectrum Enterprise Commercial Terms of Service posted to the Spectrum Enterprise website, https://enterprise.spectrum.com/ (or successor url) or, if applicable, an existing services agreement mutually executed by the parties (each, as appropriate, a "Service Agreement"). Except as specifically modified herein, all other terms and conditions of the Service Agreement shall remain unamended and in full force and effect.

Spectrum Enterprise Contact Information
Contact: Horacio Galvan Telephone: 5125939240 Email: eli.galvan@charter.com

Customer Information		
Customer Name City of Hutto		Order # 12897553
Address 306 E Live Oak St Hutto TX 78634		
Telephone (512) 759-4026		Email: david.reeves@huttotx.gov
Contact Name David Reeves	Telephone (512) 759-4026	Email: david.reeves@huttotx.gov
Billing Address 306 E Live Oak St Hutto TX 78634		

© 2016-2022 Charter Communications Operating, LLC. All Rights Reserved

NEW AND REVISED SERVICES AT 306 E Live Oak St , Hutto TX 78634				
Service Description	**Order Term**	**Quantity**	**Monthly Recurring Charge(s)**	**Total Monthly Recurring Charge(s)**
5 Static IP	36 Months	1	$ 0.00	$ 0.00
Fiber Internet 1Gbps	36 Months	1	$1,389.00	$1,389.00
Managed WiFi Access Point	36 Months	6	$ 45.00	$ 270.00
TOTAL*				**$1,659.00**

ONE TIME CHARGE(S) AT 306 E Live Oak St , Hutto TX 78634			
Service Description	**Quantity**	**One Time Charge(s)**	**Total One Time Charge(s)**
FIA Installation	1	0	$ 0.00
Managed WiFi Install	6	0	$ 0.00
TOTAL*			**$0.00**

© 2016-2022 Charter Communications Operating, LLC. All Rights Reserved

1. **TOTAL CHARGE(S). Total Monthly Recurring Charges and Total One-Time Charges are due in accordance with the monthly invoice.**
2. **TAXES**. Plus applicable taxes, fees, and surcharges as presented on the respective invoice(s).
3. **SPECIAL TERMS**.

© 2016-2022 Charter Communications Operating, LLC. All Rights Reserved

By signing below, the signatory represents they are duly authorized to execute this Service Order.

CUSTOMER SIGNATURE

Signature:_____

Printed Name:_____

Title:_____

Date:_____

© 2016-2022 Charter Communications Operating, LLC. All Rights Reserved

This page intentionally left blank

© 2016-2022 Charter Communications Operating, LLC. All Rights Reserved

AGENDA ITEM REPORT
8.4.

To:	City Council
Subject:	Consideration and possible action on Resolution No. R-2022-051 accepting the infrastructure improvements for the subdivision known as Cottonwood Creek Phase 2 (Matt Wojnowski)
Meeting:	Thursday, June 2, 2022
Department:	Public Works /
Staff Contact:	Matt Wojnowski

BACKGROUND INFORMATION:

The City staff has reviewed the close out documents and inspected the subdivision public improvements. The public improvements consist of pavement, sidewalks and utilities.

SUMMARY OF REQUEST:

Cottonwood Creek Phase 2 subdivision is located south of CR 199 and east of Carl Ster Dr. The total construction cost of the subdivision is approximately $2.3M. It consists of streets, sidewalks, wastewater, water, storm sewer and drainage. The subdivision consists of 105 lots on approximately 22 acres. The contractor used for this project is JL Gray Construction Inc. and the Engineer that designed the public infrastructure is BGE, Inc. The City staff conducted a final walk-thru on 5/12/22 for inspection and reviewed the final paperwork.

STAFF REVIEW:

FINANCIAL IMPACT:

No immediate financial impact is anticipated.

POLICY IMPLICATIONS:

ATTACHMENTS:

RESOLUTION NO. R-2022-051

A RESOLUTION ACCEPTING THE INFRASTRUCTURE IMPROVEMENTS FOR THE SUBDIVISION KNOWN AS COTTONWOOD CREEK PHASE 2 IN THE CITY OF HUTTO, WILLIAMSON COUNTY, TEXAS; PROVIDING A SEVERABILITY CLAUSE; AND PROVIDING AN EFFECTIVE DATE

WHEREAS, the City of Hutto ("City") has been notified by Lennar Homes of Texas Land and Construction (the "Developer") that the infrastructure improvements for the Cottonwood Creek Phase 2 Residential subdivision have been substantially completed and have submitted those improvements for acceptance by the City, and;

WHEREAS, a final inspection was conducted by the City's Construction and Public Works staff of all of the infrastructure improvements, including roads, drainage, sidewalks, ADA ramps, restoration, water, and wastewater improvements in Cottonwood Creek Phase 2; and

WHEREAS, all items have been constructed according to engineering plans and City codes and standards; and

WHEREAS, the Developer submitted a warranty bond to cover the material and workmanship for two years.

NOW, THEREFORE, BE IT RESOLVED BY THE CITY COUNCIL OF THE CITY OF HUTTO, TEXAS, THAT:

SECTION 1. The findings set forth in the recitals of this Resolution are hereby found to be true and correct and are hereby adopted as findings of the City Council and are incorporated into the body of this Resolution as if fully set forth herein.

SECTION 2. The City Council hereby accepts the infrastructure improvements for Cottonwood Creek Phase 2.

SECTION 3. The sections, paragraphs, sentences, phrases, clauses, and words of this Resolution are severable and if any phrase, clause, sentence, paragraph or section of this Resolution shall be declared invalid or unconstitutional by the valid and final judgment or decree of any court of competent jurisdiction, such invalidity or unconstitutionality shall not affect any of the remaining phrases, clauses, sentences, paragraphs, and sections of this Resolution, since the same would have been enacted by the City Council without the incorporation in this Resolution of any such unconstitutional or invalid phrase, clause, sentence, paragraph or section.

SECTION 4. This Resolution shall become effective and be in full force and effect from and after the date of passage and adoption by the City Council, and upon approval, thereof, as prescribed by law.

SECTION 5. The City Council hereby finds and declares that written notice of the date,

hour, place, and subject of the meeting at which this Resolution was adopted was posted and that such meeting was open to the public as required by law at all times during which this Resolution and the subject matter hereof were discussed, considered and formally acted upon, all as required by the Open Meetings Act, Chapter 551, Texas Government Code, as amended.

CONSIDERED and RESOLVED by the City Council of the City of Hutto on this the **2nd** day of **June, 2022.**

THE CITY OF HUTTO, TEXAS

_____
Mike Snyder, Mayor

ATTESTED:

_____
Angela Watson, City Secretary

APPROVED AS TO FORM:

_____
Cristian Rosas-Grillet
Assistant City Attorney

PROJECT CONSTRUCTION SUMMARY

PROJECT NAME: Cottonwood Phase 2

FINAL ACCEPTANCE DATE: _____

INSPECTOR: Todd Meaker

CONTRACTOR: JL Gray Construction Inc.

Maintained By:	
COH	Other
Boxes checked by COH	

CONSTRUCTION COSTS

STREET IMPROVEMENT COST: $775,470.00

SIDEWALK IMPROVEMENT COST: $48,735.00

SIDEWALK RAMP IMPROVEMENT COST: $43,690.00

BRIDGE IMPROVEMENT COST: N/A

POND(S) COST: N/A

DRAINAGE IMPROVEMENT COST: $428,734.00

WATER IMPROVEMENT COST: $365,070.00

WASTEWATER IMPROVEMENT COST: $334,596.25

RESTORATION COST: $346,476.75

TOTAL IMPROVEMENT COST: $ 2,342,772.00

PREPARED BY (DESIGN ENGINEER): Josh Janysek

CHECKED BY (CITY INSPECTOR):_____

CONSTRUCTION SUMMARY FOR STREETS & SIDEWALKS

STREET PAVING							
STREET NAME	Address from	Address to	Pavement Design (Thickness) Asphalt / Base	Pavement Width (FT) (foc-foc)	L (FT)	PRIVATE	ETJ
CARL STERN	N/A	N/A	2” / 14”	43’	501’	NO	NO
SEBRING CIRCLE	104	531	2” / 9”	30’	3,035’	NO	NO
GOLDEN PLAINS PKWY	801	909	2” /9”	30’	780’	NO	NO
MAGIONE ST	200	2019	2” / 9”	30’	651’	NO	NO

SIDEWALKS / SIDEWALK RAMPS						
STREET NAME	Address from	Address to	W (FT)	L (FT)	SIDES 1	CURB RAMP 2
CARL STERN DR	N/A	N/A	5’	929	N & S	0
GOLDEN PLAINS PKWY	N/A	N/A	N/A	0’	N/A	12
MAGIONE ST	N/A	N/A	N/A	0’	SW	6
SEBRING CIRCLE	300	312	5’	492’	E & SE	16

1 – Designates location of existing sidewalk (E, W, S, N, SE, SW, NE, NW of designated street)
2 – Number of Ramps

CONSTRUCTION SUMMARY FOR BRIDGES

BRIDGES / BRIDGE CLASS CULVERTS / DRAINAGE CULVERTS ACROSS ROW								
STREET NAME AND ADDRESS OR LOCATION	FEATURE CROSSED 1	TYPE 2	DESCRIPTION 3	DECK		COST	PRIVATE	ETJ
				W (FT) 4	L (FT) 5			

1 – Feature Crossed: Creek name if major creek or branch, or roadway name if overpass.

2 – Type: B – Bridge, C - Culvert, P – Pipe. All crossings 20' and wider including multiple box culverts totaling 20' or wider shall be classified as a B – Bridge. Culverts are precast of cast-in-place box culverts. Pipes are smaller drainage pipe crossings with or without headwalls.

3 – Description: i.e. 2 spans (Bridge), 2 – 5 X 7' (Culverts), 2 – 24" RCP (Pipes).

4 – Deck Width: Use "footprint" of culvert/pipes for width on buried culvert/pipes; include full "out to out" dimension, including sidewalks and railings, for width of standard bridges.

5 – Deck Length: Measured along the centerline of the roadway

CONSTRUCTION SUMMARY FOR PONDS

POND TYPE [1]	LOCATION (ADDRESS OR LOT / BLOCK #)	SIZE (SY) [2]	DRAINAGE AREA (ACRES)	PRIVATE [3]	ETJ	COST

1 – BD = Bio–Detention
D = Detention Only
DSF = Detention / Sedimentation / Filtration
F = Filtration Only
S = Sedimentation Only
SF = Sedimentation / Filtration
SFI = Sedimentation / Filtration / Infiltration
SI = Sedimentation / Irrigation
WP = Wet Pond

2 – Approximate boundary area

3 – Provide copy of recorded agreement for privately maintained ponds

CONSTRUCTION SUMMARY FOR DRAINAGE

STORM DRAIN			MANHOLES			INLETS		
SIZE (inches) (H' x W')	MATERIAL TYPE 2	L (FT)	QTY	SIZE (Dia – FT)	MATERIAL TYPE 2	QTY	SIZE Length (feet)	TYPE 1
18"	RCP	1,269	3	4	PRECAST	25	10	CURB
24"	RCP	1,328				1	15	CURB
30"	RCP	664						
36"	RCP	100						
4'X3'	RCB	203						

JUNCTION BOXES			OUTFALL STRUCTURES		
QTY	SIZE (FT x FT x FT)	MATERIAL TYPE 2	QTY	SIZE 3	DESCRIPTION 4
1	4X4	PRECAST			
6	5X5	PRECAST			
3	6X6	PRECAST			

CHANNEL			
LENGTH (FT)	BOTTOM WIDTH (FT)	SIDE SLOPE (FT/FT)	LINING MATERIAL TYPE

1) Grate, Area, Curb, Recessed Curb, Combination, Slotted Drain
2) Cast-in-Place, Precast
3) Pipe size / Culvert Size
4) Headwall, Wing Walls, Gabions

CONSTRUCTION SUMMARY FOR WATER

VALVES INSTALLED			PIPE			FIRE HYDRANTS		
SIZE	DESCRIPTION	NO.	SIZE	TYPE	LENGTH	SIZE	TYPE	NO.
8”	CLOW	13	8”	C-900, DR-14 PVC	4900’	5 ¼”	CLOW	9
AIR RELEASE								
SIZE	TYPE	NO.						
2”	AFV	1						
			SERVICES INSTALLED					
			NO.	TYPE				
			17	SINGLE				
			41	DOUBLE				

CONSTRUCTION SUMMARY FOR WASTEWATER

PIPE			MANHOLES					
SIZE	TYPE	LENGTH	DEPTH	MAKE	STA. NO.	B.C.	EYE	STREET
8”	SDR-26	3,565’	*16.5’*	PRECAST	2+30.98	NO	4	SEBRING CIRCLE
			12’	PRECAST	2+92.10	NO	2	SEBRING CIRCLE
			12’	PRECAST	3+86.74	NO	2	SEBRING CIRCLE
			13’	PRECAST	6+26.77	NO	3	SEBRING CIRCLE
			11’	PRECAST	9+29.62	NO	3	SEBRING CIRCLE
			9’	PRECAST	10+37.12	NO	1	SEBRING CIRCLE
			15’	PRECAST	1+57.02	NO	2	SEBRING CIRCLE
			12.5’	PRECAST	4+50.12	NO	2	SEBRING CIRCLE
			12’	PRECAST	7+59.48	NO	2	SEBRING CIRCLE
			10’	PRECAST	10+50.00	NO	2	SEBRING CIRCLE
			10.5’	PRECAST	12+00.00	NO	2	SEBRING CIRCLE
			10’	PRECAST	15+94.78	NO	1	SEBRING CIRCLE
			10’	PRECAST	2+45.10	NO	2	MAGIONE ST
			9.5’	PRECAST	4+52.31	NO	1	MAGIONE ST
			11’	PRECAST	4+89.66	NO	1	GOLDEN PLAINS PKWY
			10’	PRECAST	4+90.50	NO	1	SEBRING CIRCLE

SERVICES INSTALLED	
NO.	TYPE
23	Single
39	Double

TYPE OF MANHOLE COATING: SPRAYWALL

LIMITS OF CONSTRUCTION FOR WATER/WASTEWATER PROJECTS ONLY

PROJECT NAME _____ WORK ORDER #_____

W/WW JOB I.D. _____ SUBDIVISION FILE # _____

LIMITS OF PROJECT WILL BE GIVEN BY ADDRESS OF STREETS LISTED BELOW

STREET NAME	FROM	TO

THIS SHEET MUST BE USED WHEN THERE IS NOT A STREET AND DRAINAGE SUMMARY INCLUDED.

CONSTRUCTION PLANS FOR COTTONWOOD CREEK PHASE II WILLIAMSON COUNTY, TEXAS "PAVING, DRAINAGE, WATER & WASTEWATER IMPROVEMENTS" JUNE 2021

SUMMARY NOTES

ENGINEER: BGE, INC., TBPE F-1046
1701 DIRECTORS BOULEVARD, SUITE 1000
AUSTIN, TEXAS 78744
(512) 879-0400

SURVEYOR: BGE, INC., TBPE F-1046
101 WEST LOUIS HENNA BLVD, SUITE 400
AUSTIN, TX 78728
(512) 879-0400

PROPERTY OWNER: LENNAR HOMES OF TEXAS LAND AND CONSTRUCTION
13620 NORTH F.M. 620
BUILDING 1, STE. 150
AUSTIN, TX 78759

UTILITY PROVIDERS: ONCOR ENERGY
ATMOS GAS

LEGAL DESCRIPTION:

22.725 ACRE TRACT OF LAND SITUATED IN THE WILLIAM GATLIN SURVEY, ABSTRACT NO. 271, WILLIAMSON COUNTY, TEXAS; BEING A PORTION OF A CALLED 46.68 ACRE TRACT OF LAND AS CONVEYED UNTO LENNAR HOMES OF TEXAS LAND AND CONSTRUCTION, LTD. AS RECORDED IN DOCUMENT NUMBER 2019116498 OF THE OFFICIAL PUBLIC RECORDS OF WILLIAMSON COUNTY, TEXAS, A PORTION OF A CALLED 130.141 ACRE TRACT OF LAND AS CONVEYED TO LENNAR HOMES OF TEXAS LAND AND CONSTRUCTION, LTD. AS RECORDED IN DOCUMENT NUMBER 2019104719 OF THE OFFICIAL PUBLIC RECORDS OF WILLIAMSON COUNTY, TEXAS, ALSO BEING A PORTION OF THE BRANSON BOULEVARD RIGHT-OF-WAY (R.O.W.-90') AS DEDICATED BY THE PLAT OF MEADOWS AT COTTONWOOD CREEK PHASE ONE, AS RECORDED IN DOCUMENT NUMBER 2009067576 AND BEING VACATED BY DOCUMENT NUMBERS 2020092313 AND 2020027446 OF THE OFFICIAL PUBLIC RECORDS OF WILLIAMSON COUNTY TEXAS, AND CONVEYED UNTO LENNAR HOMES OF TEXAS LAND AND CONSTRUCTION, LTD AS RECORDED IN DOCUMENT NO.2020120045 OF THE OFFICIAL PUBLIC RECORDS OF WILLIAMSON COUNTY, TEXAS.

APPROVED BY

WILLIAMSON COUNTY ESD #3 — DATE 8-3-2021

CITY OF HUTTO ENGINEERING — DATE 8-5-2021

BENCHMARK

BENCHMARK #12 MAG NAIL W/ SHINER STAMPED "BGE INC" IN ASPHALT IN THE CENTER OF COUNTY ROAD 199, BEING APPROXIMATELY 1,420 FEET WEST-NORTHWEST OF THE INTERSECTION OF COUNTY ROAD 199 AND COUNTY ROAD 132.

ELEVATION: 648.75 FEET NAVD-88
GRID N: 10171601.73
GRID E: 3178479.93

BENCHMARK #13 MAG NAIL W/ SHINER STAMPED "BGE INC" IN ASPHALT IN THE NORTHBOUND LANE OF COUNTY ROAD 132, BEING APPROXIMATELY 15 FEET SOUTHEAST OF THE INTERSECTION OF COUNTY ROAD 199 AND COUNTY ROAD 132.

ELEVATION: 653.29 FEET NAVD-88
GRID N: 10171379.44
GRID E: 3179884.00

BENCHMARK #20 MAG NAIL W/ SHINER STAMPED "BGE INC" SET IN ASPHALT IN THE WESTBOUND LANE OF LUNA VISTA DRIVE BEING APPROXIMATELY 500 FEET EAST-SOUTHEAST OF THE INTERSECTION OF LUNA VISTA AND TEA ROSE TRAIL IN FRONT OF THE SOUTHEAST CORNER OF 517 LUNA VISTA DRIVE.

ELEVATION: 619.40 FEET NAVD-88
GRID N: 10166495.17
GRID E: 3177612.50

SUBMITTED BY

TIMOTHY M. HOLLAND, P.E.
BGE, INC. TBPE NO. F-1046
1701 DIRECTORS BOULEVARD, SUITE 1000
AUSTIN, TEXAS 78744
(512) 879-0400 (MAIN)

DATE 1/6/2021

STATE OF TEXAS — TIMOTHY M. HOLLAND — 94848 — LICENSED PROFESSIONAL ENGINEER — 01/06/2021

ALL RESPONSIBILITY FOR THE ADEQUACY OF THESE PLANS REMAINS WITH THE ENGINEER WHO PREPARED THEM. IN ACCEPTING THESE PLANS, THE CITY OF HUTTO MUST RELY UPON THE ADEQUACY OF THE WORK OF THE DESIGN ENGINEER.

VICINITY MAP

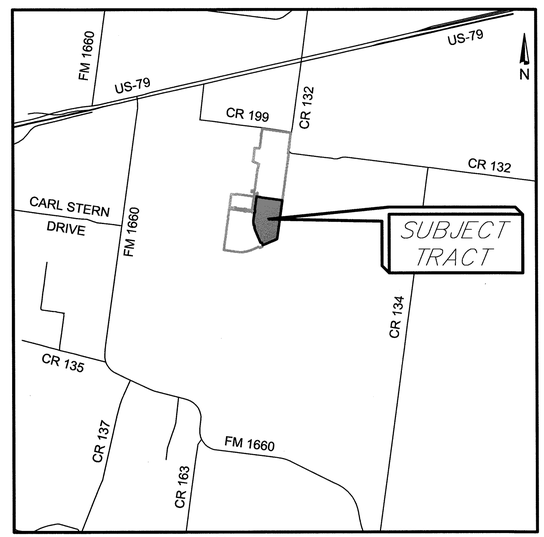

VICINITY MAP
NOT TO SCALE

NOTES:
1. THIS PROJECT IS LOCATED WITHIN THE COTTONWOOD CREEK WATERSHED.
2. THIS PROJECT IS NOT LOCATED WITHIN THE EDWARDS AQUIFER RECHARGE ZONE.
3. GRADING SHOWN FOR DRAINAGE WILL BE COMPLETED WITH THIS PROJECT.
4. NO PORTION OF THIS TRACT IS ENCROACHED BY ANY SPECIAL FLOOD HAZARD AREAS INUNDATED BY THE 1% ANNUAL CHANCE FLOODPLAIN AS IDENTIFIED BY THE U.S. FEDERAL EMERGENCY MANAGEMENT AGENCY BOUNDARY MAP (FLOOD INSURANCE RATE MAP) COMMUNITY PANEL NUMBER 48491C0520F, EFFECTIVE DATE DECEMBER 20, 2019, FOR WILLIAMSON COUNTY, TEXAS."
5. CITY OF HUTTO PROJECT NO. 1789-ENG
6. THIS PROJECT IS SUBJECT TO THE MEADOWS AT COTTONWOOD CREEK PLANNED UNIT DEVELOPMENT.

REVISIONS/CORRECTIONS					
SHEET LIST	DESCRIPTION	DATE	REVISE (R) ADD (A) VOID (V) SHEET NO.'S	ACCEPTED BY	APPROVAL DATE

Sheet List Table

Sheet Number	Sheet Title
1	COVER SHEET
2	GENERAL NOTES (1 OF 2)
3	GENERAL NOTES (2 OF 2)
4	PLAT(1 OF 2)
5	PLAT(2 OF 2)
6	EROSION CONTROL PLAN
7	CARL STERN DR
8	GOLDEN PLAINS PKWY
9	MAGIONE ST
10	SEBRING CIRCLE (1+00 TO 10+50)
11	SEBRING CIRCLE (10+50 TO 18+00)
12	SEBRING CIRCLE (18+00 TO 27+00)
13	SEBRING CIRCLE (27+00 TO END)
14	DRAINAGE AREA MAP
15	DRAINAGE CALCULATIONS
16	OVERALL GRADING PLAN
17	OVERALL STORM PLAN
18	SSL-A PLAN AND PROFILE (1+00 TO END)
19	SSL-B PLAN AND PROFILE (1+00 TO END)
20	SSL-C PLAN AND PROFILE (1+00 TO END)
21	SSL-D PLAN AND PROFILE (1+00 TO END)
22	SSL-E & SSL-F PLAN AND PROFILE (1+00 TO END)
23	SSL-A & SSL-B LATS
24	SSL-C THRU SSL-F LATS
25	OVERALL WASTEWATER PLAN
26	WW-A PLAN AND PROFILE (1+00 TO END)
27	WW-B PLAN AND PROFILE (1+00 TO 10+00)
28	WW-B PLAN AND PROFILE (10+00 TO END)
29	WW-C PLAN AND PROFILE (1+00 TO END)
30	WW-D PLAN AND PROFILE (1+00 TO END)
31	WW-E PLAN AND PROFILE (1+00 TO END)
32	OVERALL WATER PLAN
33	WL-A PLAN AND PROFILE (1+00 TO END)
34	WL-B PLAN AND PROFILE (1+00 TO 8+50)
35	WL-B PLAN AND PROFILE (8+50 TO 15+50)
36	WL-B PLAN AND PROFILE (15+50 TO END)
37	WL-C PLAN AND PROFILE (1+00 TO END)
38	WL-D PLAN AND PROFILE (1+00 TO END)
39	WL-E PLAN AND PROFILE (1+00 TO END)
40	OVERALL SIGNAGE PLAN
41	EROSION DETAILS (1 OF 2)
42	EROSION DETAILS (2 OF 2)
43	STREET DETAILS (1 OF 2)
44	STREET DETAILS (2 OF 2)
45	STORM DETAILS
46	WASTEWATER DETAILS (1 OF 3)
47	WASTEWATER DETAILS (2 OF 3)
48	WASTEWATER DETAILS (3 OF 3)
49	WATER DETAILS (1 OF 4)
50	WATER DETAILS (2 OF 4)
51	WATER DETAILS (3 OF 4)
52	WATER DETAILS (4 OF 4)
53	TxDOT DETAILS (1 OF 2)
54	TxDOT DETAILS (2 OF 2)

BGE, Inc.
1701 Directors Boulevard, Suite 1000
Austin, TX 78744
Tel: 512-879-0400 • www.browngay.com
TBPE Registration No. F-1046

RECORD DRAWING

THESE RECORD DRAWINGS HAVE BEEN PREPARED USING INFORMATION PROVIDED BY THE CONSTRUCTION CONTRACTOR AND/OR OWNER. THE SIGNATURE BELOW SIGNIFIES THAT THESE PLANS HAVE BEEN REVISED IN ACCORDANCE WITH THE INFORMATION PROVIDED. THIS DOCUMENT IS FOR INFORMATION AND REFERENCE IN CONNECTION WITH THE OWNER'S USE AND OCCUPANCY OF THE PROJECT AND IS NOT INTENDED FOR BID, PERMIT OR CONSTRUCTION.

By: Josh Janysek Date: 4/5/2022

BROWN & GAY ENGINEERS
TBPE REGISTRATION No. F-1046

CITY OF HUTTO - GENERAL CONSTRUCTION NOTES
UPDATED MARCH 2019

1. THE CONTRACTOR IS TO CONTACT ONE OF THE FOLLOWING: TEXAS811 811 LONE STAR 1-800-669-8344 FOR LOCATION OF EXISTING FACILITIES AT LEAST 48 HOURS PRIOR TO COMMENCEMENT OF ANY CONSTRUCTION ACTIVITIES.

2. PRIOR TO ANY CONSTRUCTION, THE DESIGN ENGINEER SHALL CONVENE A PRECONSTRUCTION CONFERENCE BETWEEN THE CITY OF HUTTO, HIMSELF, THE CONTRACTOR, OTHER UTILITY COMPANIES, ANY AFFECTED PARTIES AND ANY OTHER ENTITY THE CITY OR ENGINEER MAY REQUIRE. IF CONSTRUCTION IS NOT STARTED ON THE SITE WITHIN 30 CALENDAR DAYS AFTER THE PRE-CONSTRUCTION CONFERENCE, THE ENGINEER SHALL CONVENE A NEW PRECONSTRUCTION CONFERENCE BETWEEN THE CITY OF HUTTO, HIMSELF, AND ALL THE ABOVE MENTIONED ENTITIES.

3. PRIOR TO ANY CHANGES TO THE CONSTRUCTION SITE, VIDEO OF THE SITE MUST BE TAKEN AND PROVIDED TO THE CITY BEFORE CONSTRUCTION COMMENCES.

4. ALL CONSTRUCTION OPERATIONS SHALL BE PERFORMED IN ACCORDANCE WITH CITY OF HUTTO ENGINEERING MANUAL AND STANDARD CONSTRUCTION SPECIFICATIONS AND DETAILS. IF CITY OF HUTTO ENGINEERING MANUAL UNAVAILABLE, OR NOT APPLICABLE, REFER TO TXDOT AND/OR CITY OF GEORGETOWN MANUAL, STANDARDS AND/OR SPECIFICATIONS.

5. ALL STORM SEWER BENDS AND WYES SHALL BE PREFABRICATED.

6. ALL STORM SEWER MAINS TO BE FIELD-TESTED FOR WATER TIGHTNESS NO SOONER THAN 30 DAYS AFTER TOTAL COMPLETION OF THE STORM SEWER LINES.

7. ALL STORM SEWER MAINS TO BE VIDEO TAPED BY CAMERA NO SOONER THAN 30 DAYS AFTER TOTAL COMPLETION OF THE STORM SEWER LINES. TWO DIGITAL COPIES SHALL BE SUPPLIED TO THE CITY BEFORE CLOSEOUT. ALL STORM SEWER CONDUITS WILL BE INSPECTED BY THE CITY BEFORE CITY ACCEPTANCE, VIDEO MUST SHOW DETAILS OF ALL IRREGULARITIES OR OFFSETS (MINIMUM 10 SECONDS OF VIDEO TIME).

8. ALL CONSTRUCTION OPERATIONS SHALL BE ACCOMPLISHED IN ACCORDANCE WITH APPLICABLE REGULATIONS OF THE U.S. OCCUPATIONAL SAFETY AND HEALTH ADMINISTRATION. OSHA STANDARDS MAY BE PURCHASED FROM THE GOVERNMENT PRINTING OFFICE; INFORMATION AND RELATED REFERENCE MATERIALS MAY BE PURCHASED FROM OSHA, 611 E. 6TH STREET, AUSTIN, TEXAS.

9. CONTRACTOR SHALL TAKE ALL DUE PRECAUTIONS TO PROTECT EXISTING FACILITIES FROM DAMAGE. ANY DAMAGE INCURRED TO EXISTING FACILITIES AS A RESULT OF CONSTRUCTION OPERATIONS TO BE REPAIRED IMMEDIATELY BY THE CONTRACTOR, AT NO ADDITIONAL COST TO OWNER.

10. CONTRACTOR TO GIVE NOTICE TO ALL AUTHORIZED INSPECTORS, SUPERINTENDENTS OR PERSONS IN CHARGE OF PUBLIC AND PRIVATE UTILITIES AFFECTED BY HIS OPERATIONS AT LEAST 48 HOURS PRIOR TO COMMENCEMENT OF WORK.

11. CONTRACTOR TO COMPLY WITH ALL APPLICABLE LOCAL, STATE, AND FEDERAL REQUIREMENTS REGARDING EXCESS AND WASTE MATERIAL, INCLUDING METHODS OF HANDLING AND DISPOSAL.

12. CONTRACTOR TO COORDINATE INTERRUPTIONS OF ALL UTILITIES AND SERVICES. ALL WORK TO BE IN ACCORDANCE WITH THE REQUIREMENTS OF THE APPLICABLE UTILITY COMPANY OR AGENCY INVOLVED.

13. WHEN UN-LOCATED OR INCORRECTLY LOCATED, A BREAK IN UTILITY LINES, OR OTHER UTILITIES AND SERVICES ARE ENCOUNTERED DURING SITE WORK OPERATIONS, CONTRACTOR SHALL NOTIFY THE APPLICABLE UTILITY COMPANY IMMEDIATELY TO OBTAIN PROCEDURE DIRECTIONS. CONTRACTOR SHALL COOPERATE WITH THE APPLICABLE UTILITY COMPANY IN MAINTAINING ACTIVE SERVICES IN OPERATION.

14. CONTRACTOR TO LOCATE, PROTECT, AND MAINTAIN BENCHMARKS, MONUMENTS, CONTROL POINTS AND PROJECT ENGINEERING REFERENCE POINTS. RE-ESTABLISH DISTURBED OR DESTROYED ITEMS BY REGISTERED PROFESSIONAL LAND SURVEYOR IN THE STATE OF TEXAS, AT NO ADDITIONAL COST TO OWNER.

15. WHEN CONSTRUCTION IS BEING CARRIED OUT WITHIN EASEMENTS, THE CONTRACTOR SHALL CONFINE HIS WORK TO WITHIN THE PERMANENT AND TEMPORARY EASEMENTS. PRIOR TO FINAL ACCEPTANCE, THE CONTRACTOR SHALL BE RESPONSIBLE FOR REMOVING ALL TRASH AND DEBRIS WITHIN THE PERMANENT AND TEMPORARY EASEMENTS. CLEAN-UP SHALL BE TO THE SATISFACTION OF THE ENGINEER.

16. THE CONTRACTOR AND THE ENGINEER SHALL KEEP ACCURATE RECORDS OF ALL CONSTRUCTION THAT DEVIATES FROM THE PLANS. ACCURATE "RECORD" DRAWINGS WILL BE PROVIDED TO THE CITY OF HUTTO, ALONG WITH A LETTER CERTIFICATION FROM A REGISTERED PROFESSIONAL ENGINEER LICENSED IN THE STATE OF TEXAS, STATING THAT SAID PROJECT HAS BEEN CONSTRUCTED IN ACCORDANCE WITH THESE PLANS, PRIOR TO THE OWNER BEING ISSUED A CERTIFICATION OF COMPLETION AND FINAL ACCEPTANCE. THESE "RECORD" DRAWINGS SHALL MEET WITH THE SATISFACTION OF THE ENGINEERING AND DEVELOPMENT SERVICES DEPARTMENTS PRIOR TO FINAL ACCEPTANCE.

17. CONTRACTOR SHALL STRIP SIX (6) INCHES OF TOPSOIL FROM ALL AREAS SUBJECT TO GRADE MODIFICATION. REMOVE ALL AREAS OF WEAK SOIL.

18. THE CONTRACTOR SHALL PROTECT ALL EXISTING FENCES. IN THE EVENT THAT A FENCE MUST BE REMOVED, THE CONTRACTOR SHALL REPLACE SAID FENCE OR PORTION THEREOF WITH THE SAME TYPE OF FENCING TO A QUALITY OF EQUAL OR BETTER THAN THE ORIGINAL FENCE.

19. UPON COMPLETION OF THE PROJECT, THE SITE(S) AS DEFINED HEREIN SHALL BE CLEANED OF ALL DEBRIS AND LEFT IN A NEAT AND PRESENTABLE CONDITION.

20. ALL ADJOINING PAVEMENT SECTIONS SHALL BE PROTECTED DURING ALL PHASES OF CONSTRUCTION AND ANY DAMAGES INCURRED DUE TO CONTRACTOR'S OPERATION SHALL BE REPAIRED AND/OR REPLACED AT THE CONTRACTOR'S EXPENSE.

21. CONTRACTOR TO CONTROL DUST CAUSED BY THE WORK AND COMPLY WITH POLLUTION CONTROL REGULATIONS OF GOVERNING AUTHORITIES (NO SEPARATE PAY).

22. TRAFFIC CONTROLS TO BE INSTALLED IN ACCORDANCE WITH THE CURRENT TXDOT MANUAL ON UNIFORM TRAFFIC CONTROL DEVICES AND TXDOT BARRICADE AND CONSTRUCTION STANDARDS.

23. REVEGETATE ALL DISTURBED AREAS UPON COMPLETION OF THE WORK PER CITY OF GEORGETOWN CONSTRUCTION STANDARDS.

24. CONTRACTOR TO EXERCISE CAUTION DURING CONSTRUCTION NEAR AND AROUND GAS LINES AND POWER LINES.

25. NO WORK IS TO BE PERFORMED BETWEEN THE HOURS OF 6:00 P.M. AND 7:00 A.M. ALL WORK REQUIRING CITY INSPECTION SHALL BE PERFORMED MONDAY THRU FRIDAY. THE CITY RESERVES THE RIGHT TO REQUIRE THE CONTRACTOR TO UNCOVER ALL WORK PERFORMED WITHOUT INSPECTION.

26. THE CONTRACTOR SHALL DETERMINE THE EXACT LOCATION VERTICALLY AND HORIZONTALLY OF ALL EXISTING UTILITIES PRIOR TO COMMENCING WORK, AND SHALL NOTIFY THE ENGINEER AND THE CITY IF THE EXISTING UTILITY LOCATION AND DEPTHS ARE DIFFERENT FROM WHAT IS SHOWN ON THE PLANS. THE CONTRACTOR AGREES TO BE FULLY RESPONSIBLE FOR ANY AND ALL DAMAGES WHICH MIGHT BE ASSOCIATED BY THE CONTRACTOR'S FAILURE TO EXACTLY LOCATE AND PRESERVE ANY AND ALL UNDERGROUND UTILITIES.

27. ALL FIRE LINES SHALL BE DUCTILE IRON.

28. DETECTABLE TAPE SHALL BE USED FOR ALL UNDERGROUND UTILITIES. TAPE MUST BE 12" WIDE 5 MIL WITH APPLICABLE COLOR AND LABEL.

29. CONTRACTOR WILL BE RESPONSIBLE FOR KEEPING ROADS AND DRIVES ADJACENT TO AND NEAR THE SITE FREE FROM SOIL, SEDIMENT AND DEBRIS. CONTRACTOR WILL NOT REMOVE SOIL, SEDIMENT OR DEBRIS FROM ANY AREA OR VEHICLE BY MEANS OF WATER, ONLY SHOVELING AND SWEEPING WILL BE ALLOWED. CONTRACTOR WILL BE RESPONSIBLE FOR DUST CONTROL FROM THE SITE.

30. THE CONTRACTOR SHALL BE RESPONSIBLE FOR ALL DAMAGE TO PRIVATE PROPERTY WHICH OCCURS AS A RESULT OF ANY PORTION OF THIS PROJECT. ANY DAMAGE TO PRIVATE PROPERTY SHALL BE REPAIRED TO EQUAL OR BETTER CONDITION. THE CONTRACTOR SHALL PAY AND/OR SETTLE WITH PRIVATE PROPERTY OWNER(S) FOR ALL COST RELATED TO DAMAGE. THE CITY WILL NOT PROVIDE SEPARATE PAY FOR REPAIR OF DAMAGES, REIMBURSEMENTS OR SETTLEMENTS.

CITY OF HUTTO - EROSION, SEDIMENTATION AND TREE PROTECTION NOTES
UPDATED AUGUST 2018

1. THE CONTRACTOR TO INSTALL AND MAINTAIN EROSION/SEDIMENTATION CONTROLS AND TREE/NATURAL AREA PROTECTIVE FENCING PRIOR TO ANY SITE PREPARATION WORK (CLEARING, GRUBBING, GRADING, OR EXCAVATION). CONTRACTOR TO REMOVE EROSION/SEDIMENTATION CONTROLS AT THE COMPLETION OF THE PROJECT AND GRASS RESTORATION.

2. THE PLACEMENT OF EROSION/SEDIMENTATION CONTROLS TO BE IN ACCORDANCE WITH THE APPROVED EROSION AND SEDIMENTATION CONTROL PLAN AND WATER POLLUTION ABATEMENT PLAN. DEVIATIONS FROM THE APPROVED PLAN MUST BE SUBMITTED TO AND APPROVED BY THE OWNER'S REPRESENTATIVE.

3. ALL PLANTING SHALL BE DONE BETWEEN MAY 1ST AND SEPTEMBER 15TH EXCEPT AS SPECIFICALLY AUTHORIZED IN WRITING. IF PLANTING IS AUTHORIZED TO BE DONE OUTSIDE THE DATE SPECIFIED, THE SEED SHALL BE PLANTED WITH THE ADDITION OF WINTER FESCUE (KENTUCKY 31) AT A RATE OF 100 LBS/ACRE. GRASS SHALL BE COMMON BERMUDA GRASS, HULLED, MINIMUM 82% PURE LIVE SEED. ALL GRASS SEED SHALL BE FREE FROM NOXIOUS WEED, GRADE "A" RECENT CROP, CLEANED AND TREATED WITH APPROPRIATE FUNGICIDE AT TIME OF MIXING. SEED SHALL BE FURNISHED IN SEALED, STANDARD CONTAINERS WITH DEALER'S GUARANTEED ANALYSIS.

4. ALL DISTURBED AREAS TO BE RESTORED AS NOTED IN THE WATER POLLUTION ABATEMENT PLAN.

5. THE PLANTED AREA TO BE IRRIGATED OR SPRINKLED IN A MANNER THAT WILL NOT ERODE THE TOPSOIL, BUT WILL SUFFICIENTLY SOAK THE SOIL TO A DEPTH OF FOUR INCHES (4"). THE IRRIGATION TO OCCUR AT 10-DAY INTERVALS DURING THE FIRST TWO MONTHS TO INSURE GERMINATION AND ESTABLISHMENT OF THE GRASS. RAINFALL OCCURRENCES OF ONE HALF AND INCH (1/2") OR GREATER TO POSTPONE THE WATER SCHEDULE ONE WEEK.

6. RESTORATION TO BE ACCEPTABLE WHEN THE GRASS HAS GROWN AT LEAST ONE AND ONE HALF INCHES (1.5") HIGH WITH 95% COVERAGE, PROVIDED NO BARE SPOTS LARGER THAN TWENTY-FIVE SQUARE FEET EXIST.

7. A MINIMUM OF FOUR INCHES (4") OF TOPSOIL TO BE PLACE IN ALL AREA DISTURBED BY CONSTRUCTION.

8. THE CONTRACTOR TO HYDRO MULCH OR SOD (AS SHOWN ON PLANS) ALL EXPOSED CUTS AND FILLS UPON COMPLETION OF CONSTRUCTION.

9. EROSION AND SEDIMENTATION CONTROLS TO BE INSTALLED OR MAINTAINED IN A MANNER WHICH DOES NOT RESULT IN SOIL BUILDUP WITHIN TREE DRIP LINE.

10. TO AVOID SOIL COMPACTION, CONTRACTOR SHALL NOT ALLOW VEHICULAR TRAFFIC, PARKING, OR STORAGE OF EQUIPMENT OR MATERIALS IN THE TREE DRIP LINE AREA.

11. WHERE A FENCE IS CLOSER THAN FOUR FEET (4') TO A TREE TRUCK, PROTECT THE TRUNK WITH STRAPPED-ON PLANKING TO A HEIGHT OF EIGHT FEET (8'), OR THE LIMITS OF LOWER BRANCHING, IN ADDITION TO THE FENCING.

12. TREES TO BE REMOVED IN A MANNER WHICH DOES NOT IMPACT TREES TO BE PRESERVED.

13. ANY ROOT EXPOSED BY THE CONSTRUCTION ACTIVITY TO BE PRUNED FLUSH WITH THE SOIL. BACKFILL ROOT AREA WITH GOOD QUALITY TOPSOIL AS SOON AS POSSIBLE. IF EXPOSED ROOT AREAS ARE NOT BACKFILLED WITHIN TWO DAYS, COVER THEM WITH ORGANIC MATTER IN A MANNER WHICH REDUCES SOIL TEMPERATURE AND MINIMIZES WATER LOSS DUE TO EVAPORATION.

14. CONTRACTOR TO PRUNE VEGETATION TO PROVIDE CLEARANCE FOR STRUCTURE, VEHICULAR TRAFFIC, AND EQUIPMENT BEFORE DAMAGE OCCURS (RIPPING OF BRANCHES, ETC.). ALL FINISHED PRUNING TO BE DONE ACCORDING TO RECOGNIZED, APPROVED STANDARDS OF THE INDUSTRY (REFERENCE THE "NATIONAL ARBORIST ASSOCIATION PRUNING STANDARDS FOR SHADE TREES").

15. THE CONTRACTOR IS TO INSPECT THE CONTROLS AT WEEKLY INTERVALS AND AFTER EVERY RAINFALL EXCEEDING ONE-QUARTER INCH (1/4") TO VERIFY THAT THEY HAVE NOT BEEN SIGNIFICANTLY DISTURBED. ANY ACCUMULATED SEDIMENT AFTER A SIGNIFICANT RAINFALL TO BE REMOVED AND PLACED IN THE OWNER DESIGNATED SPOIL DISPOSAL SITE. THE CONTRACTOR TO CONDUCT PERIODIC INSPECTIONS OF ALL EROSION/SEDIMENTATION CONTROLS AND TO MAKE ANY REPAIRS OR MODIFICATIONS NECESSARY TO ASSURE CONTINUED EFFECTIVE OPERATION OF EACH DEVICE.

16. WHERE THERE IS TO BE AN APPROVED GRADE CHANGE, IMPERMEABLE PAVING SURFACE, TREE WELL, OR OTHER SUCH SITE DEVELOPMENT IMMEDIATELY ADJACENT TO A PROTECTED TREE, ERECT THE FENCE APPROXIMATELY TWO TO FOUR FEET (2'-4') BEHIND THE AREA IN QUESTION.

17. NO ABOVE AND/OR BELOW GROUND TEMPORARY FUEL STORAGE FACILITIES TO BE STORED ON THE PROJECT SITE.

18. IF EROSION AND SEDIMENTATION CONTROL SYSTEMS ARE EXISTING FROM PRIOR CONTRACTS, OWNER'S REPRESENTATIVE AND THE CONTRACTOR TO EXAMINE THE EXISTING EROSION AND SEDIMENTATION CONTROL SYSTEMS FOR DAMAGE PRIOR TO CONSTRUCTION. ANY DAMAGE TO PREEXISTING EROSION AND SEDIMENTATION CONTROLS NOTED TO BE REPAIRED AT OWNER'S EXPENSE.

19. INTENTIONAL RELEASE OF VEHICLE OR EQUIPMENT FLUIDS ONTO THE GROUND IS NOT ALLOWED. CONTAMINATED SOIL RESULTING FROM ACCIDENTAL SPILL TO BE REMOVED AND DISPOSED OF PROPERLY.

CITY OF HUTTO - WASTEWATER NOTES
UPDATED AUGUST 2018

1. WASTEWATER SYSTEMS SHALL BE CONSTRUCTED IN ACCORDANCE WITH THE CITY OF HUTTO ENGINEERING DESIGN MANUAL, STANDARD SPECIFICATIONS AND STANDARD DETAILS.

2. NO CURVILINEAR WASTEWATER DESIGN/LAYOUT IS PERMITTED.

3. ALL WASTEWATER SERVICE, AND VALVE LOCATIONS SHALL BE APPROPRIATELY MARKED AS FOLLOWS:

   A. WASTEWATER SERVICE "S" ON TOP OF CURB

   B. VALVE "V" ON TOP OF CURB

4. TOOLS FOR MARKING CURBS SHALL BE PROVIDED BY THE CONTRACTOR. OTHER APPROPRIATE MEANS OF MARKING SERVICE AND VALVE LOCATIONS SHALL BE PROVIDED IN AREAS WITHOUT CURBS. SUCH MEANS OF MARKING SHALL BE SPECIFIED BY THE DESIGN ENGINEER AND APPROVED BY THE CITY OF HUTTO.

5. THRUST BLOCKING AND RESTRAINTS SHALL BE IN ACCORDANCE WITH CITY OF HUTTO STANDARD SPECIFICATIONS.

6. MANDREL TESTING WILL BE REQUIRED ON ALL WASTEWATER PIPE AS PER CITY OF HUTTO CONSTRUCTION SPECIFICATIONS.

7. ALL GRAVITY WASTEWATER MAINS TO BE FIELD-TESTED FOR WATER TIGHTNESS AND VIDEO TAPED BY CAMERA SO SOONER THAN 30-DAYS AFTER TOTAL COMPLETION OF WASTEWATER LINES. TWO DIGITAL COPIES SHALL BE PROVIDED TO THE CITY BEFORE CLOSEOUT. VIDEO INSPECTION OF WASTEWATER MAINS SHALL BE COMPLETED IN ACCORDANCE WIT THE APPLICABLE CITY OF AUSTIN STANDARD SPECIFICATION.

8. HYDROSTATIC PRESSURE AND LEAKAGE TESTS SHALL BE PERFORMED ON ALL PRESSURE PIPELINES CARRYING WASTEWATER.

9. ALL MANHOLES SHALL BE TESTED FOR LEAKAGE SEPARATELY AND INDEPENDENTLY OF WASTEWATER LINES BY HYDROSTATIC EXFILTRATION TESTING OR OTHER CITY APPROVED METHOD PER CITY OF HUTTO CONSTRUCTION SPECIFICATIONS.

10. EXISTING MANHOLES SHALL BE TESTED FOR LEAKAGE PRIOR TO CORING OR ADJUSTMENT.

11. EXISTING MANHOLES SHALL HAVE ALL CONCRETE SURFACES CLEANED AND COATED PER CITY OF HUTTO WASTEWATER DETAILS AFTER CORING OR ADJUSTMENT.

12. ALL NEWLY INSTALLED PIPES AND RELATED PRODUCTS MUST CONFORM TO AMERICAN NATIONAL STANDARDS INSTITUTE / NATIONAL SANITATION FOUNDATION STANDARD 61 AND MUST BE CERTIFIED BY AN ORGANIZATION ACCREDITED BY ANSI.

13. PIPE MATERIAL FOR PRESSURE WASTEWATER MAINS SHALL BE PVC (AWWA C900, MIN. DR 14), OR DUCTILE IRON (AWWA C151, MIN. CLASS 350). DUCTILE IRON FOR PRESSURE WASTEWATER MAINS SHALL HAVE A CORROSION RESISTANT INTERIOR LINING ACCEPTABLE TO OWNER. PIPE MATERIAL FOR GRAVITY WASTEWATER MAINS SHALL BE PVC SDR-26, ASTM D-3034.

14. ALL PVC PIPE (ALL TYPES AND SDR/DR WALL THICKNESS TO BE USED) SHALL HAVE RUBBER GASKET EQUIPPED BELL AND SPIGOT JOINTS CONFORMING TO ASTM D-3212. THE GASKET MATERIAL SHALL CONFORM TO ASTM F-477. SOLVENT WELDED JOINTS WILL NOT BE APPROVED FOR THIS PROJECT.

15. ALL SANITARY SEWER FACILITIES AND POTABLE WATERLINES MUST BE INSTALLED SO AS TO PROVIDE A MINIMUM OF NINE FEET OF CLEARANCE IN ANY DIRECTION BETWEEN THEM. WHERE THE NINE FOOT SEPARATION DISTANCE CANNOT BE ACHIEVED, FOLLOW THESE SPECIAL PROCEDURES.

   A. IF A COLLECTION SYSTEM PIPE PARALLELS A PUBLIC WATER SUPPLY PIPE THE FOLLOWINGREQUIREMENTS APPLY:

   I. A COLLECTION SYSTEM PIPE MUST BE CONSTRUCTED OF CAST IRON, DUCTILE IRON, OR PVC MEETING ASTM SPECIFICATIONS WITH AT LEAST 150 POUNDS PER SQUARE INCH (PSI) PRESSURE RATING FOR BOTH THE PIPE AND JOINTS.

   II. VERTICAL SEPARATION MUST BE AT LEAST TWO FEET BETWEEN THE OUTSIDE DIAMETERS OF THE PIPES.

   III. HORIZONTAL SEPARATION MUST BE AT LEAST FOUR FEET BETWEEN OUTSIDE DIAMETERS OF THE PIPES.

   IV. COLLECTION SYSTEM PIPE MUST BE BELOW WATER SUPPLY PIPE.

   B. IF A COLLECTION SYSTEM PIPE CROSSES A PUBLIC WATER SUPPLY PIPE, THE FOLLOWING REQUIREMENTS APPLY:

   I. IF A COLLECTION SYSTEM IS CONSTRUCTED OF CAST IRON, DUCTILE IRON, OR PVC WITH A MINIMUM PRESSURE RATING OF 150 PSI, THE FOLLOWING REQUIREMENTS APPLY:

      a. A MINIMUM DISTANCE OF SIX (6) INCHES BETWEEN OUTSIDE DIAMETERS OF THE PIPES.

      b. A COLLECTION SYSTEM PIPE MUST BE BELOW A PUBLIC WATER SUPPLY PIPE.

      c. COLLECTION SYSTEM PIPE JOINTS MUST BE LOCATED AS FAR AS POSSIBLE FROM AN INTERSECTION WITH A PUBLIC WATER SUPPLY LINE.

   II. IF A COLLECTION SYSTEM CROSSES OVER A PUBLIC WATER SUPPLY PIPE, EACH PORTION OF A COLLECTION SYSTEM PIPE WITHIN NINE FEET OF A PUBLIC WATER SUPPLY PIPE MUST BE CONSTRUCTED OF CAST IRON, DUCTILE IRON, OR PVC PIPE WITH A PRESSURE RATING OF AT LEAST 150 PSI USING APPROPRIATE ADAPTERS.

16. AN INDEPENDENT QUALIFIED LAB, AT THE CONTRACTOR'S EXPENSE, SHALL PERFORM QUALITY TESTING FOR ALL WASTEWATER PIPE INSTALLED AND PRESSURE HYDROSTATIC TESTING OF ALL WATER LINES CONSTRUCTED. THE CONTRACTOR SHALL PROVIDE ALL EQUIPMENT (INCLUDING PUMPS AND GAGES), SUPPLIES, AND LABOR NECESSARY TO PERFORM THE TESTS. A CITY OF HUTTO CONSTRUCTION INSPECTOR MUST BE PRESENT FOR ALL TESTING.

17. THE CONTRACTOR SHALL PROVIDE THE DESIGN ENGINEER AND THE CITY NOT LESS THAN 24 HOURS NOTICE PRIOR TO PERFORMING STERILIZATION, QUALITY TESTING, OR PRESSURE TESTING.

18. THE CONTRACTOR SHALL NOT OPEN OR CLOSE ANY VALVES UNLESS AUTHORIZED BY THE CITY OF HUTTO.

19. ALL VALVE BOXES AND COVERS SHALL BE CAST IRON PER CITY OF HUTTO STANDARD DETAILS.

20. ALL MANHOLES SHALL BE CONCRETE WITH CAST IRON RING AND COVER. ALL MANHOLES LOCATED OUTSIDE OF PAVEMENT SHALL HAVE BOLTED AND GASKETED COVERS. CONCRETE MANHOLES TO BE COATED PER STANDARD DETAIL AND CONSTRUCTION SPECIFICATIONS. TAPPING OF FIBERGLASS MANHOLES SHALL NOT BE PERMITTED.

21. ALL WASTEWATER PIPING AND FITTINGS SHALL BE VIRGIN STOCK.

22. ALL MECHANICAL RESTRAINTS SHALL BE INSTALLED PER MANUFACTURER'S SPECIFICATIONS.

CITY OF HUTTO - WATER NOTES
UPDA
TED MARCH 2019

1. WATER SYSTEMS SHALL BE CONSTRUCTED IN ACCORDANCE WITH CITY OF HUTTO ENGINEERING MANUAL, STANDARD SPECIFICATIONS AND STANDARD DETAILS.

2. FIRE HYDRANTS ON MAINS UNDER CONSTRUCTION SHALL BE SECURELY WRAPPED WITH A POLY WRAP BAG AND TAPED INTO PLACE. THE POLY WRAP SHALL BE REMOVED WHEN THE MAINS ARE ACCEPTED AND BROUGHT INTO SERVICE. ALL FIRE LINES SHALL BE DUCTILE. IRON

3. ALL WATER SERVICE, WASTEWATER SERVICE, AND VALVE LOCATIONS SHALL BE APPROPRIATELY MARKED AS FOLLOWS:

   A. WATER SERVICE "W" ON TOP OF CURB

   B. VALVE "V" ON TOP OF CURB OR VALVE SIGN AS INSTRUCTED BY CITY ENGINEER

4. TOOLS FOR MARKING CURBS SHALL BE PROVIDED BY THE CONTRACTOR. OTHER APPROPRIATE MEANS OF MARKING SERVICE AND VALVE LOCATIONS SHALL BE PROVIDED IN AREAS WITHOUT CURBS. SUCH MEANS OF MARKING SHALL BE SPECIFIED BY THE ENGINEER AND APPROVED BY THE CITY OF HUTTO.

5. THRUST BLOCKING AND RESTRAINTS SHALL BE IN ACCORDANCE WITH CITY OF HUTTO STANDARD SPECIFICATIONS.

6. HYDROSTATIC PRESSURE AND LEAKAGE TESTS SHALL BE PERFORMED ON ALL PRESSURE PIPELINES CARRYING WATER.

7. ALL NEWLY INSTALLED PIPES AND RELATED PRODUCTS MUST CONFORM TO AMERICAN NATIONAL STANDARDS INSTITUTE MUST BE CERTIFIED BY AN ORGANIZATION ACCREDITED BY ANSI.

8. PIPE MATERIAL FOR WATER MAINS SHALL BE PVC (AWWA C900/C905, MIN. DR 14), OR DUCTILE IRON (AWWA C151, MIN. CLASS 350). WATER SERVICES (2" OR SMALLER) SHALL BE POLYETHYLENE TUBING (BLACK, 200 PSI, DR 9).

9. ALL DUCTILE IRON PIPE (D.I.P) SHALL BE WRAPPED WITH EIGHT (8) MIL, BLACK VIRGIN POLYETHYLENE WRAP AS SPECIFIED IN ANSI/AWWA C105/A21.5.

10. ALL D.I.P. SHALL BE LINED WITH VIRGIN POLYETHYLENE CONFORMING TO ASTM D-1248; 40 MIL THICKNESS (NOMINAL), 35 MILS (MINIMUM). LINER TO BE POLYBOND OR EQUAL. AT ANY POINT WHERE DIP CANNOT BE WRAPPED IN POLYETHYLENE, COAT THE EXTERIOR WITH POLYBOND OR APPROVED EQUAL.

11. ALL PVC PIPE (ALL TYPES AND SDR/DR WALL THICKNESS TO BE USED) SHALL HAVE RUBBER GASKET EQUIPPED BELL AND SPIGOT JOINTS CONFORMING TO ASTM D-3212. THE GASKET MATERIAL SHALL CONFORM TO ASTM F-477. SOLVENT WELDED JOINTS WILL NOT BE APPROVED FOR THIS PROJECT.

12. ALL POTABLE WATERLINES AND SANITARY SEWER FACILITIES MUST BE INSTALLED SO AS TO PROVIDE A MINIMUM OF NINE FEET OF CLEARANCE IN ANY DIRECTION BETWEEN THEM. WHERE THE NINE FOOT SEPARATION DISTANCE CANNOT BE ACHIEVED, FOLLOW THESE SPECIAL PROCEDURES.

   A. IF A COLLECTION SYSTEM PIPE PARALLELS A PUBLIC WATER SUPPLY PIPE THE FOLLOWING REQUIREMENTS APPLY:

   I. A COLLECTION SYSTEM PIPE MUST BE CONSTRUCTED OF CAST IRON, DUCTILE IRON, OR PVC MEETING ASTM SPECIFICATIONS WITH AT LEAST 150 POUNDS PER SQUARE INCH (PSI) PRESSURE RATING FOR BOTH THE PIPE AND JOINTS.

   II. VERTICAL SEPARATION MUST BE AT LEAST TWO FEET BETWEEN THE OUTSIDE DIAMETERS OF THE PIPES.

   III. HORIZONTAL SEPARATION MUST BE AT LEAST FOUR FEET BETWEEN OUTSIDE DIAMETERS OF THE PIPES.

   IV. COLLECTION SYSTEM PIPE MUST BE BELOW WATER SUPPLY PIPE.

   B. IF A COLLECTION SYSTEM PIPE CROSSES A PUBLIC WATER SUPPLY PIPE, THE FOLLOWING REQUIREMENTS APPLY:

   I. IF A COLLECTION SYSTEM IS CONSTRUCTED OF CAST IRON, DUCTILE IRON, OR PVC WITH A MINIMUM PRESSURE RATING OF 150 PSI, THE FOLLOWING REQUIREMENTS APPLY:

      a. A MINIMUM DISTANCE OF SIX (6) INCHES BETWEEN OUTSIDE DIAMETERS OF THE PIPES.

      b. A COLLECTION SYSTEM PIPE MUST BE BELOW A PUBLIC WATER SUPPLY PIPE.

      c. COLLECTION SYSTEM PIPE JOINTS MUST BE LOCATED AS FAR AS POSSIBLE FROM AN INTERSECTION WITH A PUBLIC WATER SUPPLY LINE.

   II. IF A COLLECTION SYSTEM CROSSES OVER A PUBLIC WATER SUPPLY PIPE, EACH PORTION OF A COLLECTION SYSTEM PIPE WITHIN NINE FEET OF A PUBLIC WATER SUPPLY PIPE MUST BE CONSTRUCTED OF CAST IRON, DUCTILE IRON, OR PVC PIPE WITH A PRESSURE RATING OF AT LEAST 150 PSI USING APPROPRIATE ADAPTERS.

13. THE CONTRACTOR MUST OBTAIN A TEMPORARY WATER METER FROM THE CITY OF HUTTO UTILITY BILLING DEPARTMENT FOR ALL WATER USED DURING CONSTRUCTION.

14. CONTRACTOR TO SCHEDULE WATER VALVE CLOSURE THROUGH CITY OF HUTTO: DEPARTMENT OF PUBLIC WORKS UTILITY DIVISION WITH ADVANCE NOTICE OF 7 DAYS. CONTRACTOR TO CONTACT PUBLIC WORKS AT PHONE 512-759-4016 AND NOTIFY CONSTRUCTION INSPECTOR. WATER VALVE CLOSURE WILL ONLY BE SCHEDULED FOR TUESDAY THROUGH THURSDAY. CONTRACTOR TO NOTIFY ALL BUSINESSES AND RESIDENTS AFFECTED BY VALVE CLOSURES. CLOSURES MUST BE COORDINATED TO MINIMIZE EFFECTS ON EXISTING CUSTOMERS WITH CONSIDERATIONS GIVEN TO BUSINESSES THAT REQUIRE WATER TO MAINTAIN OPERATIONS.

15. LINE FLUSHING OR ANY ACTIVITY USING A LARGE QUANTITY OF WATER MUST BE SCHEDULED WITH THE CITY OF HUTTO. CONTRACTOR WILL BE RESPONSIBLE FOR TRACKING THE AMOUNT OF WATER USED DURING FLUSHING AND BE REQUIRED TO REIMBURSE THE CITY FOR WATER USE, IF NOT ALREADY METERED.

16. THE CONTRACTOR, AT HIS EXPENSE, SHALL PERFORM STERILIZATION OF ALL POTABLE WATER LINES AND SHALL PROVIDE ALL EQUIPMENT NECESSARY (INCLUDING TEST GAGES), SUPPLIES (INCLUDING CONCENTRATED CHLORINE DISINFECTION MATERIAL) AND NECESSARY LABOR REQUIRED FOR THE STERILIZATION PROCEDURE. THE STERILIZATION PROCEDURE SHALL BE MONITORED BY THE ENGINEER AND A CITY OF HUTTO CONSTRUCTION INSPECTOR. WATER SAMPLES WILL BE COLLECTED TO VERIFY EACH TREATED LINE HAS ATTAINED AN INITIAL CHLORINE CONCENTRATION OF 50 PPM.

17. AN INDEPENDENT QUALIFIED LAB, AT THE CONTRACTOR'S EXPENSE, SHALL PERFORM QUALITY TESTING FOR ALL WASTEWATER PIPE INSTALLED AND PRESSURE HYDROSTATIC TESTING OF ALL WATER LINES CONSTRUCTED. THE CONTRACTOR SHALL PROVIDE ALL EQUIPMENT (INCLUDING PUMPS AND GAGES), SUPPLIES, AND LABOR NECESSARY TO PERFORM THE TESTS. A CITY OF HUTTO CONSTRUCTION INSPECTOR MUST BE PRESENT FOR ALL TESTING.

18. THE CONTRACTOR SHALL PROVIDE THE ENGINEER AND THE CITY NOT LESS THAN 24 HOURS NOTICE PRIOR TO PERFORMING STERILIZATION, QUALITY TESTING, OR PRESSURE TESTING.

19. THE CONTRACTOR SHALL NOT OPEN OR CLOSE ANY VALVES UNLESS AUTHORIZED BY THE CITY OF HUTTO.

20. ALL VALVE BOXES AND COVERS SHALL BE CAST IRON PER CITY OF HUTTO STANDARD DETAILS.

21. ALL MANHOLES SHALL BE CONCRETE WITH CAST IRON RING AND COVER. ALL MANHOLES LOCATED OUTSIDE OF PAVEMENT SHALL HAVE BOLTED AND GASKETED COVERS. CONCRETE MANHOLES TO BE COATED PER STANDARD DETAIL AND CONSTRUCTION SPECIFICATIONS. TAPPING OF FIBERGLASS MANHOLES SHALL NOT BE PERMITTED.

22. ALL FIRE LINES SHALL BE DUCTILE IRON PIPE (AWWA C-100, CLASS 200).

23. ALL FIRE HYDRANTS SHALL BE SILVER IN COLOR INCLUDING BONNET AND INSTALLED PER CITY OF HUTTO STANDARD DETAIL.

24. ALL WATER PIPING AND FITTINGS SHALL BE VIRGIN STOCK.

25. ALL MECHANICAL RESTRAINTS SHALL BE INSTALLED PER MANUFACTURER'S SPECIFICATIONS.

26. ALONG STATE HIGHWAYS, WATER LINES ARE REQUIRED ON BOTH SIDES OF THE ROADWAY. NEW WATER LINES CROSSING EXISTING STREETS SHALL BE PLACED BY BORING. A STEEL CASING SHALL BE REQUIRED UNDER MAJOR AND MINOR COLLECTOR ROADWAYS, ARTERIAL ROADWAYS AND STATE HIGHWAY. OPEN CUT EXCAVATION WILL NOT BE ALLOWED TO CROSS EXISTING STREETS, UNLESS APPROVED BY THE CITY ENGINEER.

27. ALL NEW WATER PIPES MUST HAVE DETECTABLE TAPE PER CITY OF HUTTO STANDARD DETAIL.

28. ALL AUTOMATIC FLUSH VALVES MUST USE A METER TO MEASURE WATER LOSS.

29. TRACER WIRE WILL BE TESTED AND MUST WORK CORRECTLY BEFORE CITY ACCEPTANCE OF INFRASTRUCTURE. TRACER WIRER MUST BE ENCASED IN PIPE.

30. ALL REDUCED SIZE TAPS SHALL BE MADE USING AN EPOXY COATED FABRICATED STEEL TAPPING SLEEVE WITH STAINLESS STEEL BOLTS, OR A STAINLESS STEEL FULL CIRCLE TAPPING SLEEVE WITH DUCTILE IRON FLANGE.

REV	DESCRIPTION	DATE	APR
△			
△			
△			
△			
△			

DESIGNED BY: DAZ
REVIEWED BY: TMH
DRAWN BY: DAZ

BGE, INC.
1701 DIRECTORS BOULEVARD, SUITE 1000
AUSTIN, TX 78744
TBPE Registration No. F-1046
TEL: 512-879-0400 www.browngay.com

COTTONWOOD CREEK, PHASE II
HUTTO, TEXAS

GENERAL NOTES (1 OF 2)

SUBMITTAL DATE: 03-15-2021

SHEET
2 OF 54

G:\TXC\Projects\Lennar\8390-00-Cottonwood_PH2\LD\01_CADD\01_Shts\C-SP-NOTE-PH-2.dwg Layout: GENERAL NOTES (1 OF 2) Plotted: 7/7/2021 4:21:00 PM

TCEQ WATER DISTRIBUTION SYSTEM GENERAL CONSTRUCTION NOTES

1. THIS WATER DISTRIBUTION SYSTEM MUST BE CONSTRUCTED IN ACCORDANCE WITH THE CURRENT TEXAS COMMISSION ON ENVIRONMENTAL QUALITY (TCEQ) RULES AND REGULATIONS FOR PUBLIC WATER SYSTEMS 30 TEXAS ADMINISTRATIVE CODE (TAC) CHAPTER 290 SUBCHAPTER D. WHEN CONFLICTS ARE NOTED WITH LOCAL STANDARDS, THE MORE STRINGENT REQUIREMENT SHALL BE APPLIED. AT A MINIMUM, CONSTRUCTION FOR PUBLIC WATER SYSTEMS MUST ALWAYS MEET TCEQ'S "RULES AND REGULATIONS FOR PUBLIC WATER SYSTEMS."

2. ALL NEWLY INSTALLED PIPES AND RELATED PRODUCTS MUST CONFORM TO AMERICAN NATIONAL STANDARDS INSTITUTE (ANSI)/NSF INTERNATIONAL STANDARD 61 AND MUST BE CERTIFIED BY AN ORGANIZATION ACCREDITED BY ANSI [§290.44(A)(1)].

3. PLASTIC PIPE FOR USE IN PUBLIC WATER SYSTEMS MUST BEAR THE NSF INTERNATIONAL SEAL OF APPROVAL (NSF-PW) AND HAVE AN ASTM DESIGN PRESSURE RATING OF AT LEAST 150 PSI OR A STANDARD DIMENSION RATIO OF 26 OR LESS [§290.44(A)(2)].

4. NO PIPE WHICH HAS BEEN USED FOR ANY PURPOSE OTHER THAN THE CONVEYANCE OF DRINKING WATER SHALL BE ACCEPTED OR RELOCATED FOR USE IN ANY PUBLIC DRINKING WATER SUPPLY [§290.44(A)(3)].

5. ALL WATER LINE CROSSINGS OF WASTEWATER MAINS SHALL BE PERPENDICULAR [§290.44(E)(4)(B)].

6. WATER TRANSMISSION AND DISTRIBUTION LINES SHALL BE INSTALLED IN ACCORDANCE WITH THE MANUFACTURER'S INSTRUCTIONS. HOWEVER, THE TOP OF THE WATER LINE MUST BE LOCATED BELOW THE FROST LINE AND IN NO CASE SHALL THE TOP OF THE WATER LINE BE LESS THAN 24 INCHES BELOW GROUND SURFACE [§290.44(A)(4)].

7. THE MAXIMUM ALLOWABLE LEAD CONTENT OF PIPES, PIPE FITTINGS, PLUMBING FITTINGS, AND FIXTURES IS 0.25 PERCENT [§290.44(B)].

8. THE CONTRACTOR SHALL INSTALL APPROPRIATE AIR RELEASE DEVICES WITH VENT OPENINGS TO THE ATMOSPHERE COVERED WITH 16-MESH OR FINER, CORROSION RESISTANT SCREENING MATERIAL OR AN ACCEPTABLE EQUIVALENT [§290.44(D)(1)].

9. THE CONTRACTOR SHALL NOT PLACE THE PIPE IN WATER OR WHERE IT CAN BE FLOODED WITH WATER OR SEWAGE DURING ITS STORAGE OR INSTALLATION [§290.44(F)(1)].

10. WHEN WATERLINES ARE LAID UNDER ANY FLOWING OR INTERMITTENT STREAM OR SEMI-PERMANENT BODY OF WATER THE WATERLINE SHALL BE INSTALLED IN A SEPARATE WATERTIGHT PIPE ENCASEMENT. VALVES MUST BE PROVIDED ON EACH SIDE OF THE CROSSING WITH FACILITIES TO ALLOW THE UNDERWATER PORTION OF THE SYSTEM TO BE ISOLATED AND TESTED [§290.44(F)(2)].

11. PURSUANT TO 30 TAC §290.44(A)(5), THE HYDROSTATIC LEAKAGE RATE SHALL NOT EXCEED THE AMOUNT ALLOWED OR RECOMMENDED BY THE MOST CURRENT AWWA FORMULAS FOR PVC PIPE, CAST IRON AND DUCTILE IRON PIPE. INCLUDE THE FORMULAS IN THE NOTES ON THE PLANS. O THE HYDROSTATIC LEAKAGE RATE FOR POLYVINYL CHLORIDE (PVC) PIPE AND APPURTENANCES SHALL NOT EXCEED THE AMOUNT ALLOWED OR RECOMMENDED BY FORMULAS IN AMERICA WATER WORKS ASSOCIATION (AWWA) C-605 AS REQUIRED IN 30 TAC §290.44(A)(5). PLEASE ENSURE THAT

THE FORMULA FOR THIS CALCULATION IS CORRECT AND MOST CURRENT FORMULA IS IN USE;

$$Q = \frac{LD \backslash P}{148{,}000}$$

WHERE:
Q = THE QUANTITY OF MAKEUP WATER IN GALLONS PER HOUR,
L = THE LENGTH OF THE PIPE SECTION BEING TESTED, IN FEET,
D= THE NOMINAL DIAMETER OF THE PIPE IN INCHES, AND
P = THE AVERAGE TEST PRESSURE DURING THE HYDROSTATIC TEST IN POUNDS PER SQUARE INCH (PSI).

THE HYDROSTATIC LEAKAGE RATE FOR DUCTILE IRON (DI) PIPE AND APPURTENANCES SHALL NOT EXCEED THE AMOUNT ALLOWED OR RECOMMENDED BY FORMULAS IN AMERICA WATER WORKS ASSOCIATION (AWWA) C-600 AS REQUIRED IN 30 TAC §290.44(A)(5). PLEASE ENSURE THAT THE FORMULA FOR THIS CALCULATION IS CORRECT AND MOST CURRENT FORMULA IS IN USE;

$$L = \frac{SD \backslash P}{148{,}000}$$

WHERE:
L = THE QUANTITY OF MAKEUP WATER IN GALLONS PER HOUR,
S = THE LENGTH OF THE PIPE SECTION BEING TESTED, IN FEET,
D = THE NOMINAL DIAMETER OF THE PIPE IN INCHES, AND
P = THE AVERAGE TEST PRESSURE DURING THE HYDROSTATIC TEST IN POUNDS PER SQUARE INCH (PSI).

12. THE CONTRACTOR SHALL MAINTAIN A MINIMUM SEPARATION DISTANCE IN ALL DIRECTIONS OF NINE FEET BETWEEN THE PROPOSED WATERLINE AND WASTEWATER COLLECTION FACILITIES INCLUDING MANHOLES. IF THIS DISTANCE CANNOT BE MAINTAINED, THE CONTRACTOR MUST IMMEDIATELY NOTIFY THE PROJECT ENGINEER FOR FURTHER DIRECTION. SEPARATION DISTANCES, INSTALLATION METHODS, AND MATERIALS UTILIZED MUST MEET §290.44(E)(1)-(4).

13. THE SEPARATION DISTANCE FROM A POTABLE WATERLINE TO A WASTEWATER MAIN OR LATERAL MANHOLE OR CLEANOUT SHALL BE A MINIMUM OF NINE FEET. WHERE THE NINE-FOOT SEPARATION DISTANCE CANNOT BE ACHIEVED, THE POTABLE WATERLINE SHALL BE ENCASED IN A JOINT OF AT LEAST 150 PSI PRESSURE CLASS PIPE AT LEAST 18 FEET LONG AND TWO NOMINAL SIZES LARGER THAN THE NEW CONVEYANCE, THE SPACE AROUND THE CARRIER PIPE SHALL BE SUPPORTED AT FIVE-FOOT INTERVALS WITH SPACERS OR BE FILLED TO THE SPRINGLINE WITH WASHED SAND, THE ENCASEMENT PIPE SHALL BE CENTERED ON THE CROSSING AND BOTH ENDS SEALED WITH CEMENT GROUT OR MANUFACTURED SEALANT [§290.44(E)(5)].

14. FIRE HYDRANTS SHALL NOT BE INSTALLED WITHIN NINE FEET VERTICALLY OR HORIZONTALLY OF ANY WASTEWATER LINE, WASTEWATER LATERAL, OR WASTEWATER SERVICE LINE REGARDLESS OF CONSTRUCTION [§290.44(E)(6)].

15. SUCTION MAINS TO PUMPING EQUIPMENT SHALL NOT CROSS WASTEWATER MAINS, WASTEWATER LATERALS, OR WASTEWATER SERVICE LINES. RAW WATER SUPPLY LINES SHALL NOT BE INSTALLED WITHIN FIVE FEET OF ANY TILE OR CONCRETE WASTEWATER MAIN, WASTEWATER LATERAL, OR WASTEWATER SERVICE LINE [§290.44(E)(7)].

16. WATERLINES SHALL NOT BE INSTALLED CLOSER THAN TEN FEET TO SEPTIC TANK DRAINFIELDS [§290.44(E)(8)].

17. THE CONTRACTOR SHALL DISINFECT THE NEW WATERLINES IN ACCORDANCE WITH AWWA STANDARD C-651-14OR MOST RECENT, THEN FLUSH AND SAMPLE THE LINES BEFORE BEING PLACED INTO SERVICE. SAMPLES SHALL BE COLLECTED FOR MICROBIOLOGICAL ANALYSIS TO CHECK THE EFFECTIVENESS OF THE DISINFECTION PROCEDURE WHICH SHALL BE REPEATED IF CONTAMINATION PERSISTS. A MINIMUM OF ONE SAMPLE FOR EACH 1,000 FEET OF COMPLETED WATERLINE WILL BE REQUIRED OR AT THE NEXT AVAILABLE SAMPLING POINT BEYOND 1,000 FEET AS DESIGNATED BY THE DESIGN ENGINEER [§290.44(F)(3)].

18. DECHLORINATION OF DISINFECTING WATER SHALL BE IN STRICT ACCORDANCE WITH CURRENT AWWA STANDARD C655-09 OR MOST RECENT.

RECOMMENDATIONS - PAVEMENT THICKNESS SECTIONS

Street Classification	Subgrade Material	Hot Mix Asphaltic Concrete, in	Crushed Limestone Base, in	Lime Stabilized Subgrade, in
Local Street	Subgrade PI > 20	2.0	9	8
Residential Collectors	Subgrade PI > 20	2.0	14	8
Neighborhood Collectors	Subgrade PI > 20	3.0	16	8

Notes:
1. As an alternative to lime, stabilize the subgrade using EMC Squared and EMS products in accordance with the manufacture Subgrade Specification (Section 02335). Compaction of the treated material shall be 95 percent of TxDOT TEX-114-E. Compaction should be performed with the moisture content of the soil adjusted to within 2 percent of optimum moisture content. This method has proven to be successful on previous sections. **
2. The surface clay must first be tested for sulfate reaction and a mix design should be completed to determine the proper lime content, lime type, mixing procedure and curing conditions required.
3. The concern has arisen that ground water may enter the utility trenches at this site causing detrimental settlement of the utility trench backfill. To address this concern, the wastewater utility trenches could be turned in to French drains. To achieve this, additional poorly-graded gravel, such as the gravel already being used for pipe bedding at this site, should be placed above the pipe bedding material to the elevation where ground water is encountered. This extra layer of gravel should be covered with a geotextile fabric to prevent material above the gravel from infiltrating the gravel layer. Then, the utility trench should be filled in compacted layers in accordance with the construction plans. The wastewater utility trench must then be allowed to daylight from its lowest point such that water does not accumulate in the utility trench. Additional gravel may be required in the utility trench depending upon the depth that ground water is entering the utility trench during construction. A line item for French drains should be included in construction bid documents.
4. The subgrade improvement should be extended 3 feet beyond the back of the curb line.
5. These pavement thickness designs are intended to transfer the load from the anticipated traffic conditions.
6. The responsibility of assigning street classification to the streets in this project is left to the civil engineer.
7. If pavement designs other than those listed above are desired, please contact MLA Geotechnical.

** THE CITY WILL NOT ACCEPT CHEMICAL STABILIZER, EMC SQUARED AND EMS PRODUCTS, FOR SUBGRADE TREATMENT. THE CITY ACCEPTS LIME STABILIZED SUBGRADE. THE CONTRACTOR TO CHECK WITH THE CITY INSPECTOR PRIOR TO MATERIAL SELECTION.

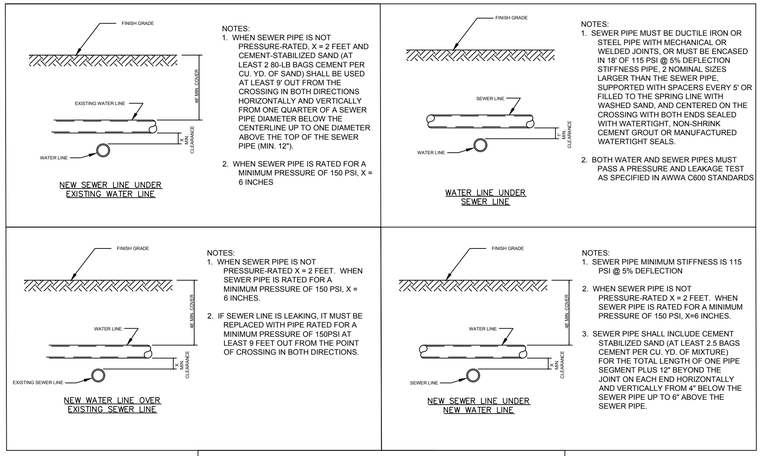

NOTES:
1. PER TCEQ § 217.53 AND § 290.44, WATER AND SEWER LINES MUST BE SEPARATED BY 9 FEET IN ALL DIRECTIONS, THE PIPES MUST BE INSTALLED IN SEPARATE DITCHES, AND THERE CAN BE NO PHYSICAL CONNECTIONS BETWEEN THEM.
2. ALSO PER TCEQ § 217.53 AND § 290.44, SEPARATION DISTANCES LESS THAN 9' ARE PERMISSIBLE IF PERFORMED PER THE DRAIWING BELOW:

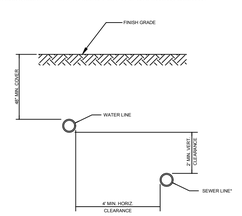

* FOR WATER LINE INSTALLATIONS NEAR EXISTING SEWER LINES, A TEXAS-LICENSED PROFESSIONAL ENGINEER MUST VERIFY THAT THE SEWER LINE IS NOT LEAKING, AND EVERY EFFORT SHALL BE EXERTED NOT TO DISTURB THE BEDDING AND BACKFILL OF THE EXISTING SEWER LINE. IF IT IS NOT POSSIBLE TO VERIFY THE LEAKS, THE SEWER LINE MUST BE REPLACED WITH AT LEAST 150 PSI PRESSURE RATED PIPE.

PARALLEL SEWER/WATER LINES

TRENCH SAFETY NOTES:
1. IN ACCORDANCE WITH THE LAWS OF THE STATE OF TEXAS AND THE U. S. OCCUPATIONAL SAFETY AND HEALTH ADMINISTRATION REGULATIONS, ALL TRENCHES OVER 5 FEET IN DEPTH IN EITHER HARD AND COMPACT OR SOFT AND UNSTABLE SOIL SHALL BE SLOPED, SHORED, SHEETED, BRACED OR OTHERWISE SUPPORTED. FURTHERMORE, ALL TRENCHES LESS THAN 5 FEET IN DEPTH SHALL ALSO BE EFFECTIVELY PROTECTED WHEN HAZARDOUS GROUND MOVEMENT MAY BE EXPECTED. TRENCH SAFETY SYSTEMS TO BE UTILIZED FOR THIS PROJECT WILL BE PROVIDED BY THE CONTRACTOR.
2. IN ACCORDANCE WITH THE U. S. OCCUPATIONAL SAFETY AND HEALTH ADMINISTRATION REGULATIONS, WHEN PERSONS ARE IN TRENCHES 4-FEET DEEP OR MORE, ADEQUATE MEANS OF EXIT, SUCH AS A LADDER OR STEPS, MUST BE PROVIDED AND LOCATED SO AS TO REQUIRE NO MORE THAN 25 FEET OF LATERAL TRAVEL.
3. IF TRENCH SAFETY SYSTEM DETAILS WERE NOT PROVIDED IN THE PLANS BECAUSE TRENCHES WERE ANTICIPATED TO BE LESS THAN 5 FEET IN DEPTH AND DURING CONSTRUCTION IT IS FOUND THAT TRENCHES ARE IN FACT 5 FEET OR MORE IN DEPTH OR TRENCHES LESS THAN 5 FEET IN DEPTH ARE IN AN AREA WHERE HAZARDOUS GROUND MOVEMENT IS EXPECTED, ALL CONSTRUCTION SHALL CEASE, THE TRENCHED AREA SHALL BE BARRICADED AND THE ENGINEER NOTIFIED IMMEDIATELY. CONSTRUCTION SHALL NOT RESUME UNTIL APPROPRIATE TRENCH SAFETY SYSTEM DETAILS, AS DESIGNED BY A PROFESSIONAL ENGINEER, ARE RETAINED AND COPIES SUBMITTED TO THE CITY OF HUTTO.

FIRE DEPARTMENT:
1. AN ALL WEATHER DRIVING SURFACE MUST BE INSTALLED IN LOCATIONS SHOWN ON THE SITE PLAN TO BE FIRE LANES, PRIOR TO ANY BUILDING CONSTRUCTION BEYOND THE FOUNDATION PHASE.
2. THE FOUR AND ONE HALF-INCH STEAMER OPENING MUST FACE THE DRIVEWAY OR STREET WITH THREE TO SIX FEET SET BACKS FROM THE CURB LINE(S). NO OBSTRUCTION IS ALLOWED WITHIN THREE (3) FEET OF ANY FIRE HYDRANT, AND THE FOUR AND ONE HALF OPENING MUST BE TOTALLY UNOBSTRUCTED FROM THE STREET/DRIVEWAY.
3. ALL PERVIOUS/DECORATIVE PAVEMENTS SHALL BE ENGINEERED AND INSTALLED FOR 75,000 LB. LIVE-VEHICLE LOADS. THE DISTRICT MUST APPROVE ANY PERVIOUS/DECORATIVE PAVING WITHIN 100 FT. OF ANY BUILDING.
4. COMMERCIAL DUMPSTERS AND CONTAINERS WITH AN INDIVIDUAL CAPACITY OF 1.5 CUBIC YARDS OR GREATER SHALL NOT BE STORED OR PLACED WITHIN TEN- (10) FT. OF OPENINGS, COMBUSTIBLE WALLS, OR COMBUSTIBLE EAVE LINES.
5. VERTICAL CLEARANCE REQUIRED FOR FIRE APPARATUS IS 13 FEET, 6 INCHES, FOR THE FULL 25 FEET WIDTH OF ALL ACCESS DRIVES AND ROUTES FOR INTERNAL CIRCULATION. DEAD-END FIRE APPARATUS ACCESS ROADS IN EXCESS OF 150 FEET IN LENGTH SHALL BE PROVIDED WITH APPROVED PROVISIONS FOR THE TURNING AROUND OF FIRE APPARATUS.
6. FIRE LANES SHALL BE STENCILED "FIRE LANE-TOW AWAY ZONE" IN WHITE LETTERS THREE INCHES TALL, AT INTERVALS NOT TO EXCEEDING 35 FEET. CURBS ALONG THE FIRE LANES SHALL BE PAINTED RED IN AREAS AS INDICATED ON THE SITE PLAN. WHERE NO CURB AND GUTTER EXISTS, FIRE APPARATUS ACCESS ROADS SHALL BE MARKED WITH PERMANENT FIRE LANE- TOW AWAY ZONE SIGNS AT INTERVALS NOT EXCEEDING 50 FEET. SIGNS SHALL HAVE A MINIMUM DIMENSION OF 12 INCHES WIDE AND 18 INCHES HIGH AND HAVE RED LETTERS ON A WHITE REFLECTIVE BACKGROUND. SIGNS SHALL BE POSTED ON ONE SIDE OR BOTH SIDES OF THE FIRE APPARATUS ROAD AS REQUIRED BY LOCAL AMENDMENTS.

GENERAL NOTES:
1. UNLESS OTHERWISE LISTED HEREIN, ALL CONSTRUCTION SHALL BE IN ACCORDANCE WITH THE CITY OF GEORGETOWN STANDARD SPECIFICATIONS, WHICH ARE HEREBY REFERENCED FOR THIS CONSTRUCTION PLAN SET.
2. WHERE A STATE OR LOCAL MUNICIPAL STANDARD DETAIL DUPLICATES A DETAIL SHOWN IN THE PLANS, THE MORE STRINGENT DETAIL, AS DETERMINED BY THE REVIEWING AGENCY, SHALL APPLY.
3. ANY EXISTING UTILITIES, PAVEMENT, CURBS, SIDEWALKS, STRUCTURES, TREES, ETC., THAT ARE DAMAGED OR REMOVED SHALL BE REPAIRED OR REPLACED TO EXISTING OR BETTER CONDITION BY THE CONTRACTOR AT NO COST TO THE OWNER.

HIGH PRESSURE PIPELINE CROSSING NOTES:
1. CONSTRUCTION PARAMETERS: CONSTRUCTION ACTIVITY OF ANY KIND THAT TAKE PLACE WITHIN THE EASEMENT WILL REQUIRE 48 HOURS (TWO WORKING DAYS) PRIOR NOTICE TO TEXAS ONE-CALL AT 811. A COMPANY REPRESENTATIVE MUST BE PRESENT DURING ANY OF THE AFOREMENTIONED CONSTRUCTION ACTIVITIES AND LANDOWNER ACKNOWLEDGES THAT COMPANY'S REPRESENTATIVE SHALL HAVE FULL AUTHORITY TO STOP ANY OF LANDOWNER'S EXCAVATION OR CONSTRUCTION RELATED ACTIVITIES WITHIN THE EASEMENT IF COMPANY'S REPRESENTATIVE, IN HIS/HER SOLE DISCRETION, BELIEVES LANDOWNER'S ACTIVITIES COULD RESULT IN DAMAGE TO THE FACILITIES OR POSE A THREAT TO THE ENVIRONMENT OR PUBLIC SAFETY. THE PRESENCE OF COMPANY'S REPRESENTATIVE WILL NOT RELIEVE LANDOWNER OF ANY LIABILITY UNDER THIS AGREEMENT.
2. CONSTRUCTION PARAMETERS (CONTINUED): NO EQUIPMENT WILL BE ALLOWED TO WORK OVER THE PIPELINE, UNLESS APPROVED BY COMPANY'S REPRESENTATIVE. NO EXCAVATION OR REMOVAL OF COVER WILL BE PERMITTED WITHIN THE EASEMENT, UNLESS APPROVED BY COMPANY'S REPRESENTATIVE. ANY EXCAVATION WITHIN EIGHTEEN (18) INCHES PLUS HALF THE DIAMETER OF THE PIPELINE WILL BE DONE BY HAND; HOWEVER, NO MECHANICAL EXCAVATION SHOULD EVER BE PERFORMED LESS THAN TWO (2) FEET FROM THE PIPELINE. ALL MECHANICAL DIGGING EQUIPMENT APPROVED TO WORK WITHIN THE EASEMENT SHALL HAVE THE TEETH REMOVED OR BARRED WITH A PLATE WELDED ACROSS THE TEETH, NO DETACHABLE IMPLEMENTS WILL BE ALLOWED. NO MEDIUM OR LARGE VIBRATORY COMPACTION EQUIPMENT IS PERMITTED TO OPERATE WITHIN TEN FEET (10') OF THE PIPELINE. ONLY WALK-BEHIND VIBRATORY ROLLERS/COMPACTORS ARE PERMITTED TO OPERATE WITHIN TEN FEET (10') OF THE PIPELINE. COMPANY WILL REQUIRE PHYSICAL VERIFICATION OF THE PIPELINE'S DEPTH OF COVER AND ALIGNMENT, AT LANDOWNER'S EXPENSE, PRIOR TO WORK BEING PERFORMED NEAR THE PIPELINE. THE METHOD OF PHYSICAL VERIFICATION, WHETHER HYDRO-EXCAVATION OR OTHER MEANS, SHALL BE COORDINATED AND APPROVED BY COMPANY'S REPRESENTATIVE. IF THE PIPELINE IS NOT AT THE ANTICIPATED ALIGNMENT OR DEPTH, LANDOWNER SHALL ADJUST THE ENCROACHMENT ACCORDINGLY AT NO EXPENSE TO COMPANY.
3. BRIDGE CROSSING: THE AFOREMENTIONED BRIDGE CROSSING SHALL BE AS CLOSE TO A 90-DEGREE ANGLE AS POSSIBLE, BUT NOT LESS THAN 45-DEGREE ANGLE, IN RELATION TO THE PIPELINE. LANDOWNER SHALL BE RESPONSIBLE FOR ALL FUTURE DAMAGE TO THE ROADWAY, BRIDGE, AND APPURTENANCES INCLUDING THEIR REPLACEMENT OR RESTORATION IN THE EVENT THAT COMPANY, OR ITS DESIGNEE, MUST ACCESS THE PIPELINE AND/OR EASEMENT TO PERFORM ROUTINE OR EMERGENCY MAINTENANCE.
4. UNDERGROUND PIPELINES AND UTILITIES: ALL CROSSINGS SHOULD BE AS CLOSE TO A 90-DEGREE ANGLE AS POSSIBLE, BUT NOT LESS THAN 35-DEGREE ANGLE, IN RELATION TO THE PIPELINE. THE AFOREMENTIONED TWELVE INCH (12") SANITARY SEWER LINE SHALL BE CONSTRUCTED VIA THE TRENCHLESS CONSTRUCTION METHOD AND SHALL MAINTAIN A MINIMUM OF THIRTY SIX INCHES (36") OF VERTICAL CLEARANCE, MEASURED FROM THE PIPELINE. LANDOWNER SHALL INCLUDE ADEQUATE INSPECTION POTHOLES EXTENDING A MINIMUM OF THIRTY SIX INCHES (36") BELOW THE PIPELINE TO ENSURE PILOT DRILL IS BELOW THE PIPELINE. THE LOCATION OF THE INSPECTION POTHOLES SHALL BE AT THE DISCRETION OF THE COMPANY REPRESENTATIVE. ALL BORE PITS SHALL BE LOCATED OUTSIDE OF THE EASEMENT. LANDOWNER SHALL EVALUATE THE STIPULATIONS PROVIDED AND ADJUST ACCORDINGLY AT NO EXPENSE TO COMPANY OR ITS AFFILIATES IF THE STIPULATIONS PROVIDED PRESENT SAFETY AND/OR ENVIRONMENTAL CONCERNS. FOREIGN UTILITIES CROSSING COMPANY'S PIPELINE SHALL INCLUDE WARNING TAPE IN ACCORDANCE WITH THE AMERICAN PUBLIC WORKS ASSOCIATION (APWA) UNIFORM COLOR CODE, ABOVE THE FOREIGN UTILITY, TWELVE INCHES (12") BELOW GROUND AND SHALL EXTEND A MINIMUM OF TWENTY FEET (20") IN EACH DIRECTION AS MEASURED FROM THE CROSSING POINT.
5. HEAVY EQUIPMENT: COMPANY WILL REQUIRE A MINIMUM OF 72 HOURS WRITTEN NOTICE PRIOR TO CROSSING THE PIPELINE WITH HEAVY EQUIPMENT. WHEREVER LANDOWNER WILL CROSS THE PIPELINE AND/OR EASEMENT WITH HEAVY EQUIPMENT, LANDOWNER WILL PLACE TIMBER MATTING, WITH A MINIMUM THICKNESS OF EIGHT INCHES (8") OR OTHER SUITABLE MATERIAL OVER THE PIPELINE AND/OR EASEMENT AS DETERMINED BY COMPANY'S FIELD REPRESENTATIVE. COMPANY WILL REQUIRE A MINIMUM OF THREE AND FIVE TENTHS FEET (3.5') OF STABLE SOIL COVER ABOVE THE PIPELINE AT LOCATIONS WHERE CONSTRUCTION ACTIVITIES REQUIRE CROSSING OVER THE PIPELINE WITH HEAVY CONSTRUCTION EQUIPMENT.
6. EXCAVATED MATERIAL: EXCAVATED MATERIAL WILL NOT BE PLACED OVER THE PIPELINE. LANDOWNER AGREES TO CLEAN UP AND REPAIR ALL DAMAGES TO THE EASEMENT RESULTING FROM THE WORK ON OR ACROSS THE EASEMENT, ANY AND ALL DAMAGE REPAIRS AND CLEANUP OF THE EASEMENT WILL BE SUBJECT TO COMPANY'S ACCEPTANCE.
7. NO INTERFERENCE: LANDOWNER SHALL AT ALL TIMES CONDUCT ALL OF ITS ACTIVITIES WITHIN THE EASEMENT IN SUCH A MANNER AS NOT TO INTERFERE WITH OR IMPEDE IN ANY MANNER WHATSOEVER THE OPERATION OF THE FACILITIES AND ANY RELATED ACTIVITIES OF COMPANY. IF AT ANY TIME COMPANY, IN ITS SOLE DISCRETION, DETERMINES THAT THE SAFETY, OPERATION, OR MAINTENANCE OF THE FACILITIES IS ADVERSELY AFFECTED BY THE ENCROACHMENT, COMPANY MAY TAKE ANY AND ALL NECESSARY ACTION TO PROTECT THE EASEMENT AND FACILITIES FROM SUCH ADVERSE CONDITION. IN ACCORDANCE WITH SECTION 12, LANDOWNER SHALL PROMPTLY REIMBURSE COMPANY FOR ITS REASONABLE COSTS INCURRED IN PROTECTING OR MODIFYING THE FACILITIES FROM, OR TO ELIMINATE, SUCH ADVERSE CONDITION.

REV	DESCRIPTION	DATE	APR
◁			
◁			
◁			
◁			
◁			

DESIGNED BY: DAZ
REVIEWED BY: TMH
DRAWN BY: DAZ

BGE, INC.
1701 DIRECTORS BOULEVARD, SUITE 1000
AUSTIN, TX 78744
TBPE Registration No. F-1046
TEL: 512-879-0400 www.brownbge.com

COTTONWOOD CREEK, PHASE II
HUTTO, TEXAS

GENERAL NOTES (2 OF 2)

SUBMITTAL DATE: 03-15-2021

STATE OF TEXAS
TIMOTHY M. HOLLAND
94848
LICENSED
PROFESSIONAL ENGINEER
01/08/2021

SHEET
3 OF 54

G:\TXC\Projects\Lennar\8390-00-Cottonwood_PH2\LD\01_CADD\01_Sits\C-SP-NOTE-PH2.dwg Layout: GENERAL NOTES (2 OF 2) Plotted: 7/7/2021 4:21:05 PM

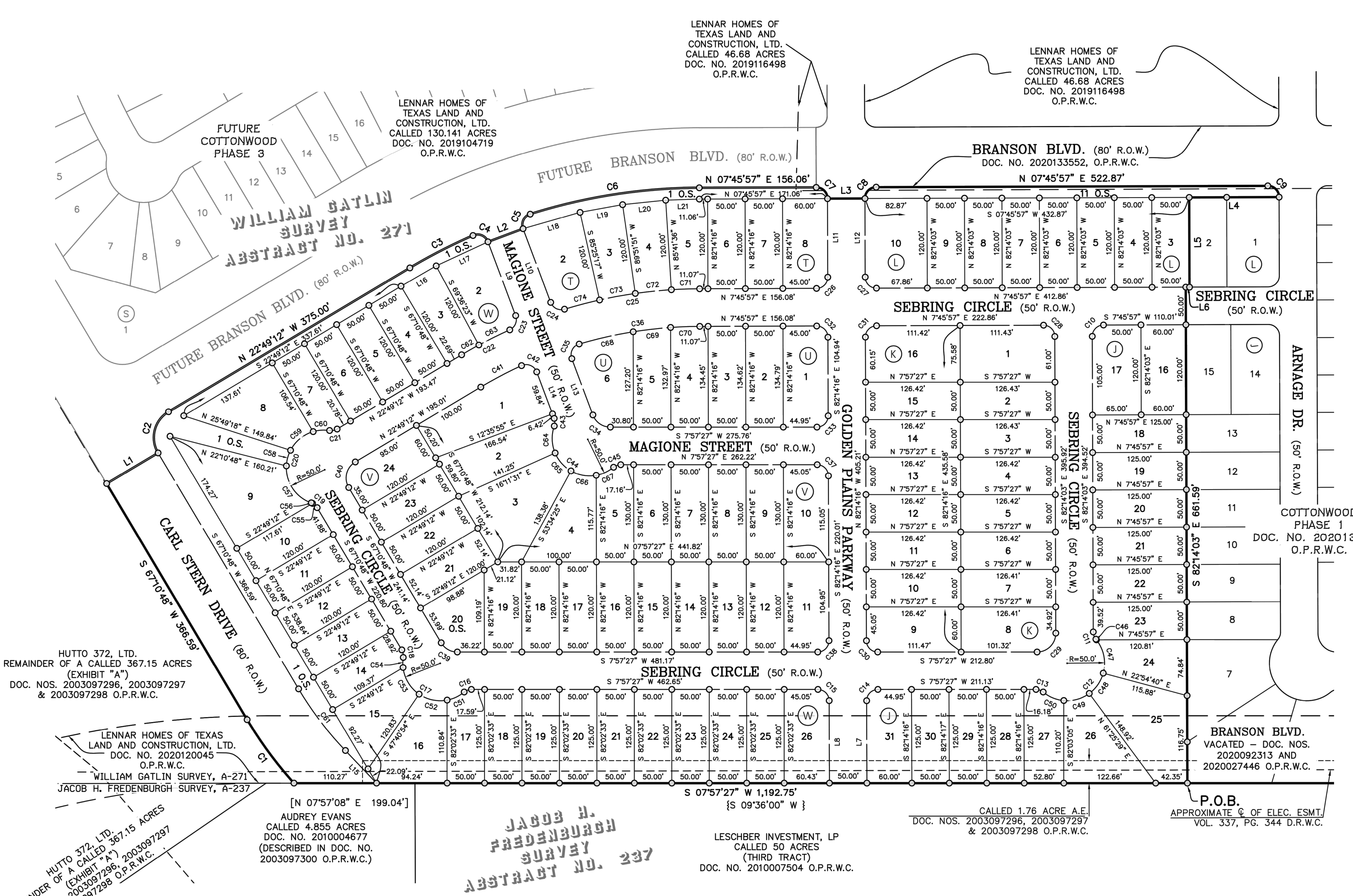

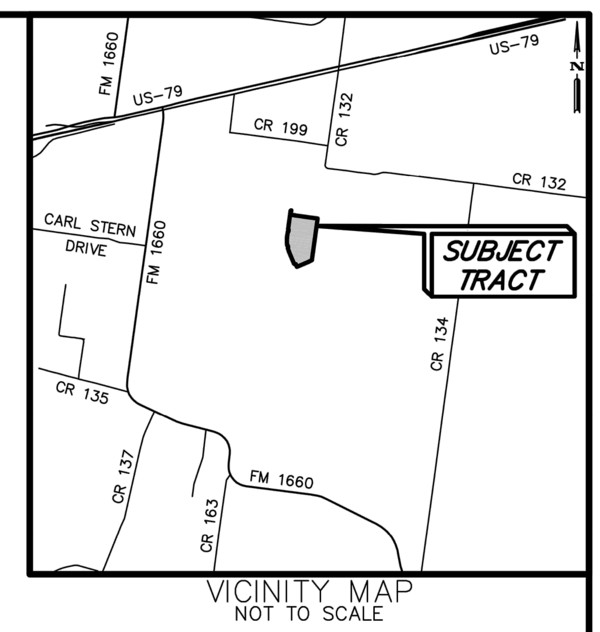

STREET NAMES

STREET	R.O.W. WIDTH	CENTERLINE LENGTH
SEBRING CIRCLE	50 FT.	3,035 FT.
MAGIONE STREET	50 FT.	651 FT.
GOLDEN PLAINS PARKWAY	50 FT.	780 FT.
CARL STERN DRIVE	80 FT.	501 FT.
TOTAL LINEAR FEET		4,967 FT.

LOT PERCENTAGE TABLE

LOT SIZE	PREVIOUS	PROPOSED PHASE 2	TOTAL	ALLOWABLE
40	47	0	47	266 MAX (27%)
50/60	111	101	212	N/A
70	2	0	2	99 MIN. (10%)

LEGEND

DOC.	DOCUMENT
D.R.W.C.	DEED RECORDS OF WILLIAMSON COUNTY
ELEC.	ELECTRIC
ESMT.	EASEMENT
NO.	NUMBER
NOS.	NUMBERS
O.S.	OPEN SPACE
O.P.R.W.C.	OFFICIAL PUBLIC RECORDS OF WILLIAMSON COUNTY
O.R.W.C.	OFFICIAL RECORDS OF WILLIAMSON COUNTY
PG.	PAGE
P.O.B.	POINT OF BEGINNING
R.O.W.	RIGHT-OF-WAY
VOL.	VOLUME
[ ]	RECORD INFORMATION FOR DOC. NO. 203097300 O.P.R.W.C.
{ }	RECORD INFORMATION FOR DOC. NO. 2010007504 O.P.R.W.C.
●	FOUND 1/2" IRON ROD
○	SET 1/2" IRON ROD W/CAP STAMPED "BGE INC"

LAND USE SCHEDULE

DESCRIPTION	NO.	ACREAGE
RESIDENTIAL	101	15.911 AC.
OPEN SPACE	4	1.027 AC.
RIGHT-OF-WAY	–	5.787 AC.
TOTAL	105	22.725 AC.

BEARING BASIS NOTE:

BEARING ORIENTATION IS BASED ON THE TEXAS STATE PLANE COORDINATE SYSTEM, CENTRAL ZONE 4203, NAD83. DISTANCES SHOWN HEREON ARE IN SURFACE AND CAN BE CONVERTED TO GRID BY DIVIDING BY THE SCALE FACTOR = 1.0001097659

0 100 200 300

FINAL PLAT

COTTONWOOD PHASE 2

A SUBDIVISION OF 22.725 ACRES OF LAND
LOCATED IN THE
WILLIAM GATLIN SURVEY, ABSTRACT NO. 271
WILLIAMSON COUNTY, TEXAS

BGE, Inc.
7330 San Pedro Ave., Suite 202
San Antonio, TX 78216
Tel: 210-581-3600 • www.bgeinc.com
TBPELS Registration No. F-1046
TBPELS Licensed Surveying Firm No. 10106502

SHEET 1 OF 3

R – RESIDENTIAL O/S – OPEN SPACE

LOT AREA TABLE

LOT	BLOCK	SQ. FT.	TYPE
16	J	7,200	R
17	J	7,752	R
18	J	6,250	R
19	J	6,250	R
20	J	6,250	R
21	J	6,250	R
22	J	6,250	R
23	J	6,236	R
24	J	6,710	R
25	J	11,887	R
26	J	9,138	R
27	J	6,320	R
28	J	6,250	R
29	J	6,250	R
30	J	6,250	R
31	J	7,451	R

LOT AREA TABLE

LOT	BLOCK	SQ. FT.	TYPE
1	K	9,534	R
2	K	6,321	R
3	K	6,321	R
4	K	6,321	R
5	K	6,321	R
6	K	6,321	R
7	K	6,321	R
8	K	7,449	R
9	K	7,537	R
10	K	6,321	R
11	K	6,321	R
12	K	6,321	R
13	K	6,321	R
14	K	6,321	R
15	K	6,321	R
16	K	9,480	R

LOT AREA TABLE

LOT	BLOCK	SQ. FT.	TYPE
3	L	6,000	R
4	L	6,000	R
5	L	6,000	R
6	L	6,000	R
7	L	6,000	R
8	L	6,000	R
9	L	6,000	R
10	L	9,895	R

LOT AREA TABLE

LOT	BLOCK	SQ. FT.	TYPE
1	T	6,236	R
2	T	8,381	R
3	T	6,352	R
4	T	6,352	R
5	T	6,280	R
6	T	6,000	R
7	T	6,000	R
8	T	7,152	R

LOT AREA TABLE

LOT	BLOCK	SQ. FT.	TYPE
1	U	7,996	R
2	U	6,735	R
3	U	6,727	R
4	U	6,701	R
5	U	6,523	R
6	U	8,116	R

LOT AREA TABLE

LOT	BLOCK	SQ. FT.	TYPE
1	V	11,030	R
2	V	8,329	R
3	V	11,500	R
4	V	7,960	R
5	V	6,255	R
6	V	6,500	R
7	V	6,500	R
8	V	6,500	R
9	V	6,500	R
10	V	7,752	R
11	V	7,151	R
12	V	6,000	R
13	V	6,000	R
14	V	6,000	R
15	V	6,000	R
16	V	6,000	R
17	V	6,000	R
18	V	6,000	R
19	V	5,902	R
20	V	6,093	O.S.
21	V	6,257	R
22	V	6,000	R
23	V	6,000	R
24	V	7,066	R

LOT AREA TABLE

LOT	BLOCK	SQ. FT.	TYPE
1	W	24,191	O.S.
2	W	8,065	R
3	W	6,193	R
4	W	6,000	R
5	W	6,000	R
6	W	6,000	R
7	W	5,805	R
8	W	9,690	R
9	W	13,028	R
10	W	5,994	R
11	W	6,000	R
12	W	6,000	R
13	W	6,000	R
14	W	5,904	R
15	W	7,201	R

LINE TABLE

NUMBER	BEARING	DISTANCE
L1	N 22°49'12" W	80.00'
L2	N 12°35'55" W	50.00'
L3	N 07°46'05" E	50.00'
L4	S 07°45'57" W	120.00'
L5	S 82°14'03" E	120.00'
L6	S 07°45'57" W	5.00'
L7	S 82°14'16" E	109.95'
L8	N 82°14'16" W	110.05'
L9	S 77°24'05" W	105.18'
L10	N 77°24'05" E	105.18'
L11	N 82°14'16" W	105.00'
L12	S 82°14'16" E	105.00'
L13	S 77°24'05" W	80.08'
L14	N 77°24'05" E	66.26'
L15	S 54°17'13" W	60.07'
L16	N 22°06'52" W	54.23'
L17	N 16°58'02" W	76.26'
L18	S 08°05'57" E	79.19'
L19	S 02°21'26" E	57.75'
L20	S 02°05'08" W	57.75'
L21	S 06°02'11" W	44.97'

CURVE DATA

NUMBER	RADIUS	DELTA ANGLE	ARC DISTANCE	CHORD BEARING	CHORD DISTANCE
C1	540.00'	111°11'13"	105.43'	S 61°35'11" W	105.27'
C2	40.00'	90°00'00"	62.83'	N 67°49'12" W	56.57'
C3	760.00'	7°08'37"	94.76'	N 19°14'53" W	94.70'
C4	15.00'	93°04'40"	24.37'	N 30°51'45" E	21.78'
C5	15.00'	93°04'40"	24.37'	N 56°03'35" W	21.78'
C6	760.00'	17°17'12"	229.30'	N 0°52'39" W	228.43'
C7	15.00'	89°59'47"	23.56'	N 52°45'51" E	21.21'
C8	15.00'	89°59'39"	23.56'	N 37°14'09" W	21.21'
C9	15.00'	90°00'00"	23.56'	N 52°45'57" E	21.21'
C10	15.00'	90°00'00"	23.56'	S 37°14'03" E	21.21'
C11	15.00'	39°42'54"	10.40'	N 77°54'30" E	10.19'
C12	50.00'	169°37'19"	148.02'	N 37°08'18" W	99.59'
C13	15.00'	39°42'54"	10.40'	S 27°48'55" W	10.19'
C14	15.00'	90°11'43"	23.61'	S 37°08'24" E	21.25'
C15	15.00'	89°48'17"	23.51'	S 52°51'36" W	21.18'
C16	15.00'	39°42'54"	10.40'	S 11°54'00" E	10.19'
C17	50.00'	138°39'10"	121.00'	N 37°34'08" E	93.56'
C18	15.00'	39°42'54"	10.40'	S 87°02'15" W	10.19'
C19	15.00'	39°42'54"	10.40'	S 47°19'21" W	10.19'
C20	50.00'	169°25'49"	147.86'	S 67°49'12" E	99.57'
C21	15.00'	39°42'54"	10.40'	N 2°57'45" W	10.19'
C22	625.00'	6°38'17"	72.41'	S 19°30'03" E	72.37'
C23	15.00'	86°25'00"	22.62'	N 59°23'25" W	20.54'
C24	15.00'	86°25'00"	22.62'	N 34°11'35" E	20.54'
C25	625.00'	16°46'52"	183.05'	S 0°37'29" E	182.40'
C26	15.00'	90°00'13"	23.56'	N 37°14'09" W	21.21'
C27	15.00'	89°59'47"	23.56'	N 52°45'51" E	21.21'
C28	15.00'	90°00'00"	23.56'	S 52°45'57" W	21.21'
C29	25.00'	90°11'30"	39.35'	N 37°08'18" W	35.41'
C30	15.00'	89°48'17"	23.51'	N 52°51'36" E	21.18'
C31	15.00'	90°00'13"	23.56'	S 37°14'09" E	21.21'
C32	15.00'	89°59'47"	23.56'	S 52°45'51" W	21.21'
C33	15.00'	90°11'43"	23.61'	N 37°08'24" W	21.25'
C34	25.00'	69°26'38"	30.30'	N 42°40'46" E	28.48'
C35	15.00'	94°05'46"	24.63'	S 55°33'02" E	21.96'
C36	575.00'	16°16'06"	163.26'	S 0°22'06" E	162.72'
C37	15.00'	89°48'17"	23.51'	S 52°51'36" W	21.18'
C38	15.00'	90°11'43"	23.61'	N 37°08'24" W	21.25'
C39	25.00'	59°13'21"	25.84'	N 37°34'08" E	24.71'
C40	25.00'	90°00'00"	39.27'	S 67°49'12" E	35.36'
C41	575.00'	6°07'31"	61.47'	S 19°45'26" E	61.44'
C42	15.00'	94°05'46"	24.63'	S 30°21'12" W	21.96'
C43	15.00'	39°42'54"	10.40'	N 82°44'28" W	10.19'
C44	50.00'	148°52'27"	129.92'	N 42°40'46" E	96.33'
C45	15.00'	39°42'54"	10.40'	S 11°54'00" E	10.19'
C46	50.00'	1°19'19"	1.15'	S 58°42'42" W	1.15'
C47	50.00'	54°04'00"	47.18'	S 86°24'21" W	45.45'
C48	50.00'	38°18'35"	33.43'	N 47°24'21" W	32.81'
C49	50.00'	41°22'09"	36.10'	N 7°33'59" W	35.32'
C50	50.00'	34°33'16"	30.15'	N 30°23'44" E	29.70'
C51	50.00'	29°12'05"	25.48'	N 17°09'25" W	25.21'
C52	50.00'	44°52'28"	39.16'	N 19°52'52" E	38.17'
C53	50.00'	49°00'22"	42.77'	N 66°49'17" E	41.47'
C54	50.00'	15°34'15"	13.59'	S 80°53'25" E	13.55'
C55	15.00'	32°46'22"	8.58'	S 50°47'37" W	8.46'
C56	15.00'	6°56'32"	1.82'	S 30°56'10" W	1.82'
C57	50.00'	73°10'41"	63.86'	N 64°03'14" E	59.61'
C58	50.00'	24°49'07"	21.66'	S 66°56'51" E	21.49'
C59	50.00'	45°58'30"	40.12'	S 31°33'03" E	39.05'
C60	50.00'	25°27'30"	22.22'	S 4°09'57" W	22.03'
C61	460.00'	12°53'35"	103.51'	N 60°44'00" E	103.29'
C62	625.00'	2°25'35"	26.47'	S 21°36'24" E	26.47'
C63	625.00'	4°12'42"	45.94'	S 18°17'16" E	45.93'
C64	50.00'	42°03'37"	36.70'	S 83°54'49" E	35.89'
C65	50.00'	37°13'34"	32.49'	N 56°26'36" E	31.92'
C66	50.00'	39°56'27"	34.85'	N 17°51'36" E	34.15'
C67	50.00'	29°38'49"	25.87'	N 16°56'02" W	25.58'
C68	575.00'	7°22'18"	73.98'	S 4°49'00" E	73.93'
C69	575.00'	5°00'54"	50.33'	S 1°22'36" W	50.31'
C70	575.00'	3°52'54"	38.96'	S 5°49'30" W	38.95'
C71	625.00'	3°27'32"	37.73'	S 6°02'11" W	37.73'
C72	625.00'	4°26'34"	48.46'	S 2°05'08" W	48.45'
C73	625.00'	4°26'34"	48.46'	S 2°21'26" E	48.45'
C74	625.00'	4°26'12"	48.40'	S 6°47'49" E	48.39'

LEGAL DESCRIPTION

FIELD NOTES FOR A 22.725 ACRE TRACT OF LAND SITUATED IN THE WILLIAM GATLIN SURVEY, ABSTRACT NO. 271, WILLIAMSON COUNTY, TEXAS; BEING A PORTION OF A CALLED 46.68 ACRE TRACT OF LAND AS CONVEYED UNTO LENNAR HOMES OF TEXAS LAND AND CONSTRUCTION, LTD. AS RECORDED IN DOCUMENT NUMBER 2019116498 OF THE OFFICIAL PUBLIC RECORDS OF WILLIAMSON COUNTY, TEXAS, A PORTION OF A CALLED 130.141 ACRE TRACT OF LAND AS CONVEYED TO LENNAR HOMES OF TEXAS LAND AND CONSTRUCTION, LTD. AS RECORDED IN DOCUMENT NUMBER 2019104719 OF THE OFFICIAL PUBLIC RECORDS OF WILLIAMSON COUNTY, TEXAS, ALSO BEING A PORTION OF THE BRANSON BOULEVARD RIGHT-OF-WAY (R.O.W.~ 90') AS DEDICATED BY THE PLAT OF MEADOWS AT COTTONWOOD CREEK PHASE ONE, AS RECORDED IN DOCUMENT NUMBER 2009067576 AND BEING VACATED BY DOCUMENT NUMBERS 2020092313 AND 2020027446 OF THE OFFICIAL PUBLIC RECORDS OF WILLIAMSON COUNTY, TEXAS, AND CONVEYED UNTO LENNAR HOMES OF TEXAS LAND AND CONSTRUCTION, LTD AS RECORDED IN DOCUMENT NO. 2020120045 OF THE OFFICIAL PUBLIC RECORDS OF WILLIAMSON COUNTY, TEXAS; SAID 22.725 ACRE TRACT OF LAND BEING MORE PARTICULARLY DESCRIBED BY METES AND BOUNDS AS FOLLOWS:

BEGINNING at 1/2-inch iron rod with a cap stamped "BGE INC" set on the common line of said vacated right-of-way and a called 50 acre tract of land (Third Tract) as conveyed unto Leschber Investment, LP in Document Number 2010007504 of the Official Public Records of Williamson County, Texas, at the southeast corner of Cottonwood Phase 1 as recorded in Document Number 2020133552 of the Official Public Records of Williamson County, Texas, for the northeast corner and POINT OF BEGINNING of the herein described tract:

THENCE, S 07° 57' 27" W, coincident with the common line of said vacated right-of-way, said 50 acre tract and a called 4.855 acre tract of land as conveyed unto Audrey Evans in Document Number 2010004677 and described in Document Number 2003097300 of the Official Public Records of Williamson County, Texas, a distance of 1,192.75 feet to a 1/2-inch iron rod with a cap stamped "BGE INC" set at the beginning of a non-tangent curve for the southeast corner of the herein described tract;

THENCE, departing said common line, over and across said vacated right-of-way, the aforementioned 130.141 acre tract and the aforementioned 46.68 acre tract the following eleven (11) courses:

1) Curving to the right with a radius of 540.00 feet, an arc length of 105.43 feet, a central angle of 11° 11' 13", a chord bearing of S 61° 35' 11" W, and a chord distance of 105.27 feet to a 1/2-inch iron rod with a cap stamped "BGE INC" set for a point of tangency of the herein described tract;

2) S 67° 10' 48" W, a distance of 366.59 feet to a 1/2-inch iron rod with a cap stamped "BGE INC" set for the southwest corner of the herein described tract;

3) N 22° 49' 12" W, a distance of 80.00 feet to a 1/2-inch iron rod with a cap stamped "BGE INC" set at the beginning of a non-tangent curve of the herein described tract;

4) Curving to the right with a radius of 40.00 feet, an arc length of 62.83 feet, a central angle of 90° 00' 00", a chord bearing of N 67° 49' 12" W, and a chord distance of 56.57 feet to a 1/2-inch iron rod with a cap stamped "BGE INC" set at the point of tangency of the herein described tract;

5) N 22° 49' 12" W, a distance of 375.00 feet to a 1/2-inch iron rod with a cap stamped "BGE INC" set for a point of curvature of the herein described tract;

6) Curving to the right with a radius of 760.00 feet, an arc length of 94.76 feet, a central angle of 07° 08' 37", a chord bearing of N 19° 14' 53" W, and a chord distance of 94.70 feet to a 1/2-inch iron rod with a cap stamped "BGE INC" set for a point of compound curvature of the herein described tract;

7) Curving to the right with a radius of 15.00 feet, an arc length of 24.37 feet, a central angle of 93° 04' 40", a chord bearing of N 30° 51' 45" E, and a chord distance of 21.78 feet to a 1/2-inch iron rod with a cap stamped "BGE INC" set at the end of this curve;

8) N 12° 35' 55" W, a distance of 50.00 feet to a 1/2-inch iron rod with a cap stamped "BGE INC" set at the beginning of a non-tangent of the herein described tract;

9) Curving to the right with a radius of 15.00 feet, an arc length of 24.37 feet, a central angle of 93° 04' 40", a chord bearing of N 56° 03' 35" W, and a chord distance of 21.78 feet to a 1/2-inch iron rod with a cap stamped "BGE INC" set for a point of compound curvature of the herein described tract;

10) Curving to the right with a radius of 760.00 feet, an arc length of 229.30 feet, a central angle of 17° 17' 12", a chord bearing of N 00° 52' 39" W, and a chord distance of 228.43 feet to a 1/2-inch iron rod with a cap stamped "BGE INC" set for a point of tangency of the herein described tract;

11) N 07° 45' 57" E, a distance of 156.06 feet to a 1/2-inch iron rod with a cap stamped "BGE INC" set at the south end of a curve return from the east right of way line of Branson Boulevard (R.O.W. ~ 80') as shown on the aforementioned plat of Cottonwood Phase 1 for a point of curvature of the herein described tract;

THENCE, continuing over and across the 46.68 acre tract, and the 130.141 acre tract coincident with said east right-of-way line the following five (5) courses:

1) Curving to the right with a radius of 15.00 feet, an arc length of 23.56 feet, a central angle of 89° 59' 47", a chord bearing of N 52° 45' 51" E, and a chord distance of 21.21 feet to a 1/2-inch iron rod with a cap stamped "BGE INC" set at the end of this curve;

2) N 07° 46' 05" E, a distance of 50.00 feet to a 1/2-inch iron rod with a cap stamped "BGE INC" set at the beginning of a non-tangent curve of the herein described tract;

3) Curving to the right with a radius of 15.00 feet, an arc length of 23.56 feet, a central angle of 89° 59' 39", a chord bearing of N 37° 14' 09" W, and a chord distance of 21.21 feet to a 1/2-inch iron rod with a cap stamped "BGE INC" set for a point of tangency of the herein described tract;

4) Thence, N 07° 45' 57" E, a distance of 522.87 feet to a 1/2-inch iron rod with a cap stamped "BGE INC" set for a point of curvature of the herein described tract;

5) Curving to the right with a radius of 15.00 feet, an arc length of 23.56 feet, a central angle of 90° 00' 00", a chord bearing of N 52° 45' 57" E, and a chord distance of 21.21 feet to a to a 1/2-inch iron rod with a cap stamped "BGE INC" set at the end of this curve for the most northerly corner of the herein described tract;

THENCE, coincident with the south line of said Cottonwood Phase 1 the following four (4) courses:

1) S 07° 45' 57" W, a distance of 120.00 feet to a 1/2-inch iron rod with a cap stamped "BGE INC" set for a re-entrant corner of the herein described tract;

2) S 82° 14' 03" E, a distance of 120.00 feet to a 1/2-inch iron rod with a cap stamped "BGE INC" set for a corner of the herein described tract;

3) S 07° 45' 57" W, a distance of 5.00 feet to a 1/2-inch iron rod with a cap stamped "BGE INC" set for a re-entrant corner of the herein described tract;

4) S 82° 14' 03" East a distance of 661.59 feet to the POINT OF BEGINNING and containing 22.725 acre of land, more or less.

FINAL PLAT

COTTONWOOD PHASE 2

A SUBDIVISION OF 22.725 ACRES OF LAND
LOCATED IN THE
WILLIAM GATLIN SURVEY, ABSTRACT NO. 271
WILLIAMSON COUNTY, TEXAS

BGE, Inc.
7330 San Pedro Ave., Suite 202
San Antonio, TX 78216
Tel: 210-581-3600 • www.bgeinc.com
TBPELS Registration No. F-1046
TBPELS Licensed Surveying Firm No. 10106502

SHEET 2 OF 3

COTTONWOOD CREEK, PHASE II
HUTTO, TEXAS

PLAT(1 OF 2)

BGE, INC.
1701 DIRECTORS BOULEVARD, SUITE 1000
AUSTIN, TX 78744
TBPE Registration No. F-1046
TEL: 512-879-0400 www.browngay.com

DESIGNED BY:	DAZ
REVIEWED BY:	TMH
DRAWN BY:	DAZ

REV	DESCRIPTION	DATE	APR

SUBMITTAL DATE: 03-15-2021

STATE OF TEXAS
TIMOTHY M. HOLLAND
94848
LICENSED PROFESSIONAL ENGINEER
07/08/2021

SHEET 4 OF 54

STATE OF TEXAS §
COUNTY OF TRAVIS §

KNOW ALL MEN BY THESE PRESENTS:

THAT LENNAR HOMES OF TEXAS LAND AND CONSTRUCTION, LTD., A TEXAS LIMITED PARTNERSHIP, ACTING HEREIN BY AND THROUGH KEVIN PAPE, VICE PRESIDENT, BEING THE OWNER OF 22.725 ACRES OF LAND OUT OF THE WILLIAM GATLIN SURVEY A-271, WILLIAMSON COUNTY, TEXAS AS CONVEYED TO IT BY INSTRUMENTS RECORDED IN DOC. NO'S. 2019116498, 2019104719, AND 2020120045 OF THE OFFICIAL PUBLIC RECORDS OF WILLIAMSON COUNTY, TEXAS, OF WHICH A PORTION BEING OUT OF MEADOWS AT COTTONWOOD CREEK, PHASE ONE, A SUBDIVISION AS RECORDED IN DOC. NO. 2009067576 OF THE PLAT RECORDS OF WILLIAMSON COUNTY, TEXAS; SAID MEADOWS AT COTTONWOOD CREEK, PHASE ONE HAVING BEEN VACATED BY DOCUMENT NOS. 2020027446 AND 2020092313 AND CONVEYED UNTO LENNAR HOMES OF TEXAS LAND AND CONSTRUCTION, LTD AS RECORDED IN DOCUMENT NO. 2020120045 OF THE OFFICIAL PUBLIC RECORDS OF WILLIAMSON COUNTY, TEXAS OF THE OFFICIAL PUBLIC RECORDS OF WILLIAMSON COUNTY, TEXAS; SAID SUBDIVISION HAVING BEEN APPROVED FOR RESUBDIVISION PURSUANT TO PUBLIC NOTIFICATION & HEARING PROVISIONS OF CHAP. 212 OF THE TEXAS LOCAL GOVERNMENT CODE, DOES HEREBY SUBDIVIDE SAID 22.725 ACRES OF LAND IN ACCORDANCE WITH THE PLAT SHOWN HEREON, TO BE KNOWN AS:

COTTONWOOD PHASE 2

AND DOES HEREBY DEDICATE TO THE PUBLIC THE USE OF THE STREETS AND EASEMENTS SHOWN HEREON, SUBJECT TO ANY EASEMENTS AND/OR RESTRICTIONS HERETOFORE GRANTED AND NOT RELEASED.

WITNESS MY HAND, THIS THE _____ DAY OF _____, 20___, A.D.

_____
KEVIN PAPE, VICE PRESIDENT
LENNAR HOMES OF TEXAS LAND AND CONSTRUCTION, LTD.
13620 NORTH F.M. 620
BUILDING 1, SUITE 150
AUSTIN, TEXAS 78717

STATE OF TEXAS §
COUNTY OF TRAVIS §

BEFORE ME, THE UNDERSIGNED AUTHORITY, PERSONALLY APPEARED KEVIN PAPE, KNOWN TO ME TO BE THE PERSON WHOSE NAME IS SUBSCRIBED TO THE FOREGOING INSTRUMENT AND ACKNOWLEDGED TO ME THAT HE EXECUTED THE SAME FOR THE PURPOSES AND CONSIDERATION THEREIN EXPRESSED AND IN THE CAPACITY THEREIN STATED.

_____
NOTARY PUBLIC, STATE OF TEXAS

_____
PRINT NOTARY'S NAME
MY COMMISSION EXPIRES _____

I, TIMOTHY M. HOLLAND, AM AUTHORIZED UNDER THE LAWS OF THE STATE OF TEXAS, TO PRACTICE THE PROFESSION OF ENGINEERING, AND DO HEREBY CERTIFY THAT THIS PLAT IS FEASIBLE FROM AN ENGINEERING STANDPOINT, AND IS TRUE AND CORRECT TO THE BEST OF MY KNOWLEDGE.

PRELIMINARY: THIS DOCUMENT SHALL NOT BE RECORDED FOR ANY PURPOSE AND SHALL NOT BE USED OR VIEWED OR RELIED UPON AS A FINAL SURVEY DOCUMENT

_____ _____
TIMOTHY M. HOLLAND, P.E. DATE
LICENSED PROFESSIONAL ENGINEER NO. 94848
BGE, INC.
1701 DIRECTORS BOULEVARD, SUITE 1000
AUSTIN, TX 78744

I, DION P. ALBERTSON, AM AUTHORIZED UNDER THE LAWS OF THE STATE OF TEXAS, TO PRACTICE THE PROFESSION OF SURVEYING, AND DO HEREBY CERTIFY THAT THIS PLAT IS TRUE AND CORRECT TO THE BEST OF MY KNOWLEDGE AND WAS PREPARED FROM AN ACTUAL ON THE GROUND SURVEY OF THE PROPERTY UNDER MY SUPERVISION.

PRELIMINARY: THIS DOCUMENT SHALL NOT BE RECORDED FOR ANY PURPOSE AND SHALL NOT BE USED OR VIEWED OR RELIED UPON AS A FINAL SURVEY DOCUMENT

_____ _____
DION P. ALBERTSON, R.P.L.S. DATE
REGISTERED PROFESSIONAL LAND SURVEYOR NO. 4963
BGE, INC.
7330 SAN PEDRO AVE, SUITE 202
SAN ANTONIO, TEXAS 78216

GENERAL NOTES:

1. BEARING ORIENTATION IS BASED ON THE TEXAS STATE PLANE COORDINATE SYSTEM, CENTRAL ZONE 4203, NAD83. COMBINED SCALE FACTOR = 1.0001097659
2. NO BUILDING, FENCING, LANDSCAPING OR STRUCTURES ARE ALLOWED WITHIN ANY DRAINAGE OR WASTEWATER EASEMENT UNLESS EXPRESSLY PERMITTED BY THE CITY OF HUTTO.
3. BUILDING SETBACKS SHALL CONFORM TO UDC REQUIREMENTS, AS AMENDED.
4. A TEN (10) FOOT PUBLIC UTILITY EASEMENT (PUE) IS HEREBY DEDICATED ALONG AND ADJACENT TO ALL STREET SIDE PROPERTY LINES.
5. A FIVE (5) FOOT PUBLIC UTILITY EASEMENT (PUE) IS HEREBY DEDICATED ON EACH SIDE OF ALL REAR LOT LINES.
6. A THREE (3) FOOT PUBLIC UTILITY EASEMENT (PUE) IS HEREBY DEDICATED ON EACH SIDE OF ALL INTERIOR SIDE OF LOT LINES.
7. IF PARKING IS DESIRED ON BOTH SIDES OF THE STREET THEN THE STREETS MUST BE A MINIMUM OF 33 FEET WIDE. IF THE STREETS ARE LESS THAN 33 FEET IN WIDTH FIRE LANE SIGNAGE IS REQUIRED. (2018 IFC APPENDIX D SEC. 103.6 – D103.6.2)
8. FIRE LANE SIGNS SHALL BE POSTED ON ONE SIDE OF THE STREET MORE THAN 26 FEET WIDE AND LESS THAN 32 FEET WIDE.
9. NO LOT IN THIS SUBDIVISION SHALL BE OCCUPIED UNTIL CONNECTION IS MADE TO PUBLIC WATER AND WASTEWATER UTILITIES.
10. SIDEWALKS AND TREES SHALL BE PROVIDED ON BOTH SIDES OF ALL STREETS WITHIN THIS SUBDIVISION.
11. SIDEWALKS AND TREES SHALL BE PROVIDED ALONG ALL STREETS BOUNDING THIS SUBDIVISION.
12. ALL FENCING THAT IS NOT ON A PRIVATE LOT TO BE MAINTAINED BY THE HOA.
13. STREET LIGHTING SHALL BE PROVIDED BY THE DEVELOPER IN CONFORMANCE WITH THE UDC REQUIREMENTS, AS AMENDED.
14. THIS TRACT IS WITHIN WATER CCN SERVICE AREA 10321. WATER AND WASTEWATER WILL BE AVAILABLE THROUGH THE CITY OF HUTTO AFTER THE APPROPRIATE WATER AND WASTEWATER SYSTEMS ARE INSTALLED TO THIS SITE. THE CITY OF HUTTO ASSUMES NO OBLIGATIONS FOR INSTALLING ANY WATER AND WASTEWATER IMPROVEMENTS REQUIRED TO SERVE THIS SITE.
15. NO PORTION OF THIS TRACT IS ENCROACHED BY THE ULTIMATE 1% ANNUAL CHANCE FLOODPLAIN.
16. NO PORTION OF THIS TRACT IS ENCROACHED BY ANY SPECIAL FLOOD HAZARD AREAS INUNDATED BY THE 1% ANNUAL CHANCE FLOODPLAIN AS IDENTIFIED BY THE U.S. FEDERAL EMERGENCY MANAGEMENT AGENCY BOUNDARY MAP (FLOOD INSURANCE RATE MAP) COMMUNITY PANEL NUMBER 48491C0520F, EFFECTIVE DATE DECEMBER 20, 2019, FOR WILLIAMSON COUNTY, TEXAS.
17. IN ORDER TO PROMOTE DRAINAGE AWAY FROM A STRUCTURE, THE SLAB ELEVATIONS SHALL BE BUILT AT LEAST ONE (1) FOOT ABOVE THE SURROUNDING GROUND AND SHOULD BE GRADED AWAY FROM THE STRUCTURE AT A SLOPE OF ½" PER FOOT FOR A DISTANCE OF AT LEAST TEN (10) FEET.
18. ALL SUBDIVISION CONSTRUCTION SHALL CONFORM TO THE CITY OF HUTTO UNIFIED DEVELOPMENT CODE AS AMENDED, CONSTRUCTION STANDARDS, AND GENERALLY ACCEPTED ENGINEERING PRACTICES.
19. ON-SITE STORMWATER DETENTION FACILITIES WILL BE PROVIDED TO REDUCE POST-DEVELOPMENT PEAK RATES OF DISCHARGE OF THE 2, 10, 25 AND 100-YEAR STORM EVENTS.
19. ALL EASEMENTS ON PRIVATE PROPERTY SHALL BE MAINTAINED BY THE PROPERTY OWNER OR HIS OR HER ASSIGNS.
20. ALL DRAINAGE LOTS SHALL BE OWNED AND MAINTAINED BY THE HOMEOWNER'S ASSOCIATION.

CITY DEVELOPMENT SERVICES SIGNATURES:

THIS SUBDIVISION IS LOCATED WITHIN THE CITY LIMITS OF HUTTO, THIS THE _____ DAY OF _____, 20____.

_____ _____
ASHBY GRUNDMAN, DEVELOPMENT SERVICES DIRECTOR DATE

THIS PLAT WAS APPROVED FOR RECORDING BY THE HUTTO CITY COUNCIL ON THE ON THE _____ DAY OF _____, 20___.

_____ _____ _____ _____
MIKE SNYDER, MAYOR DATE HOLLY NAGY, CITY SECRETARY DATE

STATE OF TEXAS §
§ KNOW ALL MEN BY THESE PRESENTS:
COUNTY OF WILLIAMSON §

THAT I, NANCY RISTER, CLERK OF THE COUNTY COURT OF SAID COUNTY, DO HEREBY CERTIFY THAT THE FOREGOING INSTRUMENT IN WRITING, WITH ITS CERTIFICATION OF AUTHENTICATION, WAS FILED FOR RECORD IN MY OFFICE ON THE ____DAY OF _____, 20___ A.D., AT _____ O'CLOCK ___M. AND DULY RECORDED ON THE ____DAY OF _____, 20___ A.D., AT _____ O'CLOCK ___M. IN THE PLAT RECORDS OF SAID COUNTY, IN DOCUMENT NO. _____.

WITNESS MY HAND AND SEAL OF THE COUNTY COURT OF SAID COUNTY, AT MY OFFICE IN GEORGETOWN, TEXAS, THE DATE LAST ABOVE WRITTEN.

NANCY RISTER, CLERK, COUNTY COURT
WILLIAMSON COUNTY, TEXAS

BY: _____
DEPUTY

FINAL PLAT
COTTONWOOD PHASE 2

A SUBDIVISION OF 22.725 ACRES OF LAND
LOCATED IN THE
WILLIAM GATLIN SURVEY, ABSTRACT NO. 271
WILLIAMSON COUNTY, TEXAS

BGE, Inc.
7330 San Pedro Ave., Suite 202
San Antonio, TX 78216
Tel: 210-581-3600 • www.bgeinc.com
TBPELS Registration No. F-1046
TBPELS Licensed Surveying Firm No. 10106502

SHEET 3 OF 3

G:\TXC\Projects\Lennar\8390-00-Cottonwood_PH2\SV\04_Final\Drawings\Plat\8390-00_Cottonwood_PH2_Plat_20210331.dwg 3/31/2021 3:50 PM, emiddle, 1:0

SUBMITTAL DATE: 03-15-2021

COTTONWOOD CREEK, PHASE II
HUTTO, TEXAS

PLAT(2 OF 2)

BGE, INC.
1701 DIRECTORS BOULEVARD, SUITE 1000
AUSTIN, TX 78744
TBPE Registration No. F-1046
TEL: 512-879-0400 www.browngay.com

DESIGNED BY:	REVIEWED BY:	DRAWN BY:
DAZ	TMH	DAZ

REV	DESCRIPTION	DATE	APR
△			
△			
△			
△			
△			

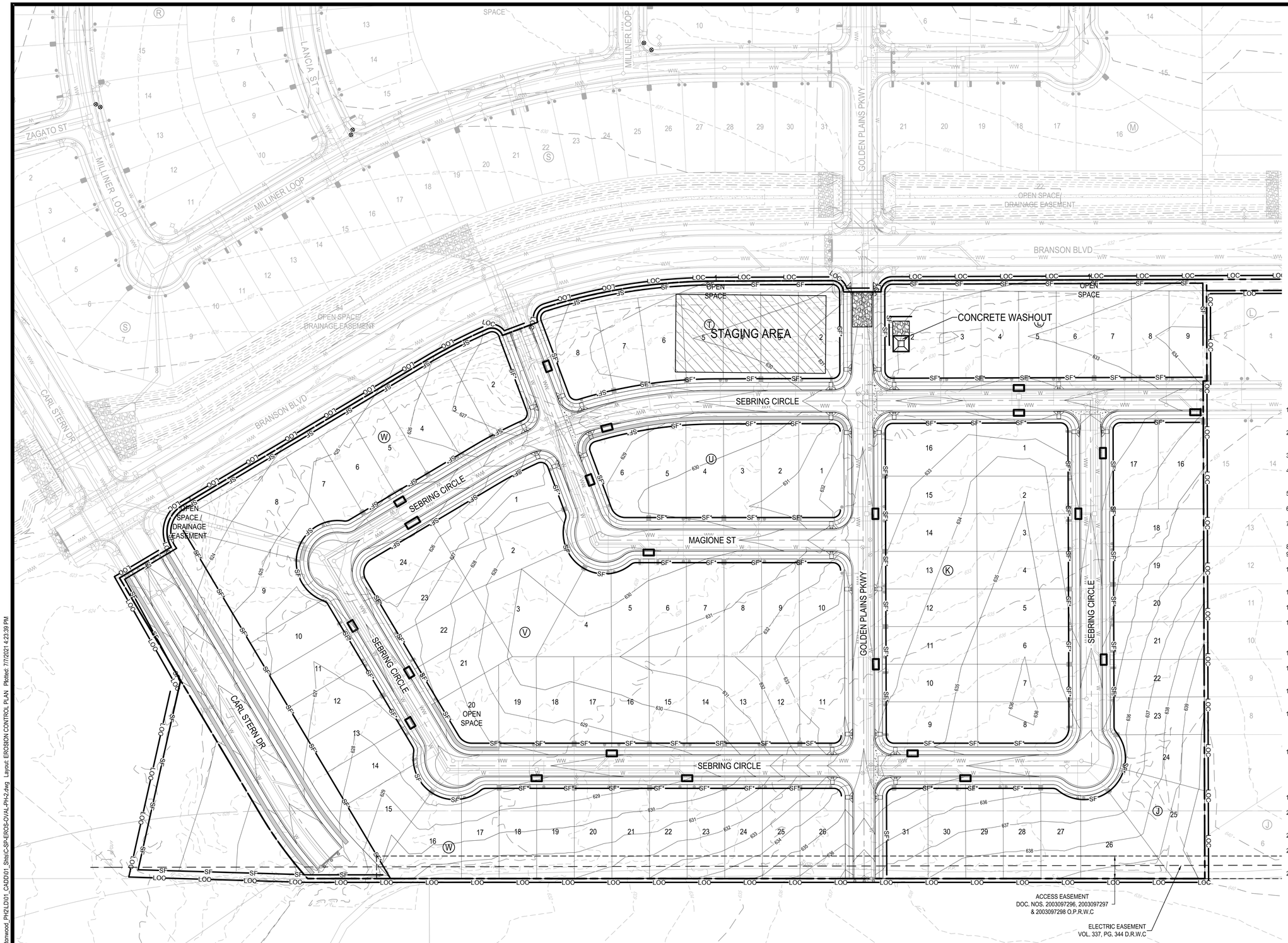

0 30' 60' 120'
SCALE: 1" = 60'

LEGEND

LOC	LIMITS OF CONSTRUCTION
SF	SILT FENCE
SF*	PHASE II SILT FENCE (SEE NOTE 21 THIS SHEET)
100	ENGINEERED 100YR FLOODPLAIN
FEMA	FEMA 100YR FLOODPLAIN
	WATERWAY SETBACK
XXX	EXISTING MAJOR CONTOURS
	EXISTING MINOR CONTOURS
XXX	PROPOSED MAJOR CONTOURS
	PROPOSED MINOR CONTOURS
	INLET PROTECTION
	ROCK BERM
	CONSTRUCTION ENTRANCE

1. IF A CONCRETE WASHOUT IS TO BE UTILIZED DURING CONSTRUCTION THE LOCATION WILL BE DETERMINED ONCE CONSTRUCTION HAS BEGUN AND WILL BE PROPERLY NOTATED ON THE SITE MAP AT THAT TIME.
2. ALL REQUIRED NOTICES AND PERMITS MUST BE PLACED IN A HIGHLY VISIBLE LOCATION ONSITE BEFORE THE COMMENCEMENT OF CONSTRUCTION.
3. ALL EROSION AND SEDIMENTATION CONTROLS (ESC) MUST BE INSTALLED PRIOR TO ANY DISTURBANCE TO THE PROJECT SITE.
4. INSTALL SILT FENCE ACCORDINGLY FOR RUN-ON DIVERSION OR OFFSITE SEDIMENT CONTROL DEPENDING ON UP OR DOWN SLOPE, FACING POST SIDE ON THE DOWN GRADIENT SIDE.
5. ALL ESC USED ONSITE MUST BE REGULARLY MONITORED AND MAINTAINED AS NEEDED.
6. MUD AND OR DIRT TRACKED INTO THE ROADWAY MUST BE IMMEDIATELY REMOVED UPON DISCOVERY.
7. EXCESS MATERIALS THAT WILL BE TRANSPORTED TO AN OFFSITE LOCATION MUST HAVE THAT LOCATION CLEARED BY COUNTY INSPECTOR.
8. LOOSE TRASH AND DEBRIS MUST BE DISPOSED OF PROPERLY ONSITE.
9. CONTRACTOR SHALL MAINTAIN AND UTILIZE DUST CONTROL FOR THE DURATION OF THE PROJECT.
10. THE STABILIZED CONSTRUCTION ENTRANCE SHALL BE MAINTAINED IN A CONDITION THAT PREVENTS TRACKING ONTO THE PUBLIC ROADWAY ON AN ONGOING/REGULAR BASIS.
11. INITIATE TEMPORARY STABILIZATION WHEN CONSTRUCTION CEASES IN A DISTURBED AREA FOR 14 DAYS.
12. INITIATE PERMANENT STABILIZATION IMMEDIATELY ONCE WORK HAS CEASED AND FINAL GRADE HAS BEEN ACHIEVED.
13. ALL DISTURBED/BARE AREAS WILL REQUIRE PERMANENT STABILIZATION BEFORE FINAL ACCEPTANCE CAN BE ACHIEVED. AVOID DISTURBING AREAS OF THE PROJECT THAT ARE NOT NECESSARY FOR CONSTRUCTION.
14. COUNTY INSPECTOR MAY REQUEST ADDITIONAL CONTROLS BE INSTALLED ONSITE AS NEEDED.
15. CONTRACTOR MUST REMOVE SEDIMENT FROM ALL STORM SEWER INLET BOXES, LINES, PIPES AND CULVERTS BEFORE CONDITIONAL/FINAL ACCEPTANCE CAN OBTAINED.
16. TRAVIS COUNTY REQUIRES CERTIFIED SWP3 INSPECTORS TO CONDUCT SWP3 INSPECTIONS AND REPORTING ON ALL PROJECTS WITH ONE ACRE OF DISTURBANCE AND LARGER.
17. PERMITTEE SHALL INSPECT ALL INLET PROTECTION DEVICES AS PART OF THE WEEKLY SWP3 REPORT. UPON RECEIVING A FORECAST CALLING FOR A RAIN EVENT FOR AN EXTENDED PERIOD, MODIFICATION OF INLET PROTECTION SHOULD BE MADE TO PREVENT FLOODING OR PONDING OF WATER IF TRAFFIC OR PROPERTY CONCERNS ARISE.
18. A DE-WATERING PLAN FOR THE POND(S) MUST BE APPROVED BY THE COUNTY ENVIRONMENTAL INSPECTOR IF THE TEMPORARY SEDIMENTATION POND IS DE-WATERED AFTER RAINFALL EVENTS. THE DE-WATERING METHOD MUST MINIMIZE THE DISCHARGE OF SUSPENDED SEDIMENTS TO THE GREATEST EXTENT FEASIBLE BY DRAWING WATER FROM THE SURFACE OF THE IMPOUNDMENT.
19. INLET PROTECTION SHALL BE INSTALLED IMMEDIATELY FOLLOWING COMPLETION OF EACH INLET.
20. THE TOP OF ROCK BERMS NEAR THE END OF A HEADWALL SHALL BE FAR ENOUGH AWAY AND LOWER THEN THE FLOWLINE OF THE INFLOW PIPE TO PREVENT SEDIMENT BACK-UP WITHIN THE PIPE.
21. PHASE II SILT FENCE TO BE PLACED AFTER THE ROAD AND UTILITY CONSTRUCTION ARE COMPLETE.
22. CONSTRUCTION TRAFFIC FOR PHASE 2 SHALL ENTER AND LEAVE THE PHASE 2 PROJECT AREA AT THE PROPOSED STABILIZED CONSTRUCTION ENTRANCES AND NOT FROM ANY OTHER AREAS.
23. CONSTRUCTION TRAFFIC FOR PHASE 3 SHALL ENTER AND LEAVE THE PHASE 3 PROJECT AREA AT THE PROPOSED STABILIZED CONSTRUCTION ENTRANCES AND NOT FROM ANY OTHER AREAS.

REV	DESCRIPTION	DATE	APR

DESIGNED BY: DAZ
REVIEWED BY: TMH
DRAWN BY: DAZ

BGE, INC.
1701 DIRECTORS BOULEVARD, SUITE 1000
AUSTIN, TX 78744
TBPE Registration No. F-1046
TEL: 512-879-0400 www.bgeinc.com

COTTONWOOD CREEK, PHASE II
HUTTO, TEXAS

EROSION CONTROL PLAN

SUBMITTAL DATE: 03-15-2021

STATE OF TEXAS
TIMOTHY M. HOLLAND
94848
LICENSED
PROFESSIONAL ENGINEER
07/08/2021

SHEET
6 OF 54

Record Drawing

G:\TXC\Projects\Lennar\8390-00-Cottonwood_PH2\LDV01_CADD\01_Sits\C-SP-EROS-OVAL-PH-2.dwg Layout: EROSION CONTROL PLAN Plotted: 7/7/2021 4:23:39 PM

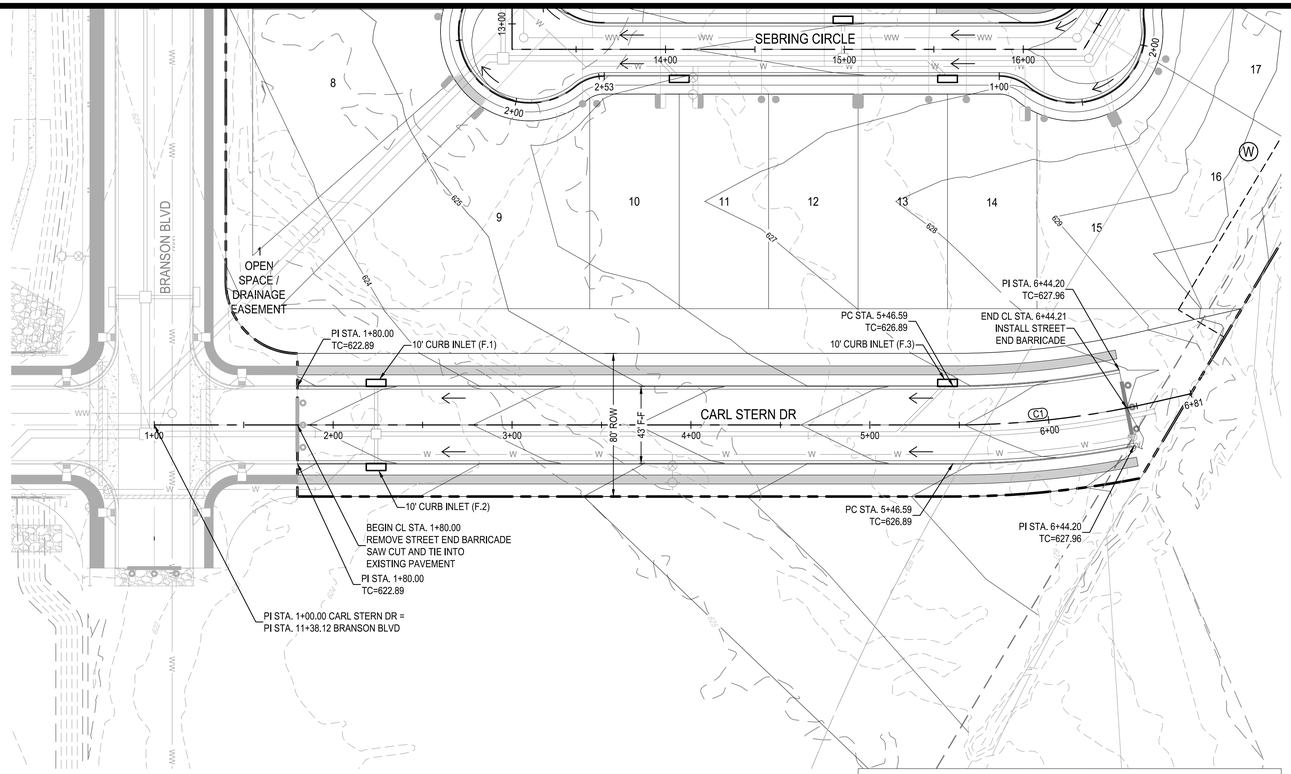

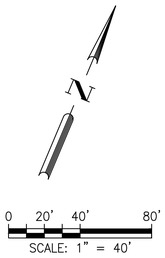

LEGEND

- PROPERTY BOUNDARY
- PROPOSED RIGHT OF WAY
- EXISTING MAJOR CONTOUR
- EXISTING MINOR CONTOUR
- PROPOSED MAJOR CONTOUR
- PROPOSED MINOR CONTOUR
- OE — OVERHEAD ELECTRIC
- HAND RAIL
- 28 — LOT NUMBER
- ROAD CENTERLINE
- RIBBON CURB
- CURB AND GUTTER
- DIRECTION OF FLOW
- CURB INLET
- 5' SIDEWALK TO BE CONSTRUCTED WITH SUBDIVISION IMPROVEMENTS (TYP)
- 5' SIDEWALK TO BE CONSTRUCTED BY BUILDER (TYP)
- CURB RAMP
- CONCRETE VALLEY GUTTER

Curve Table: Alignments					
CURVE	DELTA ANGLE	RADIUS	ARC LENGTH	CHORD DIRECTION	CHORD DISTANCE
C1	12°53'35"	500.00'	112.51'	N60° 44' 00.41"E	112.28'

NOTES:

1. ALL CURB RETURN RADII TO BE 25.5' AT FACE OF CURB UNLESS OTHERWISE NOTED.
2. THE LOCATION OF EXISTING UNDERGROUND UTILITIES ARE SHOWN IN AN APPROXIMATE WAY AND HAVE NOT BEEN INDEPENDENTLY VERIFIED BY THE OWNER OR ITS REPRESENTATIVE. THE CONTRACTOR SHALL DETERMINE THE EXACT LOCATION OF ALL EXISTING UTILITIES BEFORE COMMENCING WORK. THE CONTRACTOR AGREES TO BE FULLY RESPONSIBLE FOR ANY AND ALL DAMAGES WHICH MIGHT BE ASSOCIATED WITH THE CONTRACTORS FAILURE TO LOCATE AND PRESERVE ANY AND ALL UNDERGROUND UTILITIES.
3. SIDEWALKS ADJACENT TO SINGLE FAMILY LOTS ARE TO BE CONSTRUCTED CONCURRENTLY WITH EACH SINGLE FAMILY HOUSE.
4. ALL CURBS TO BE CURB AND GUTTER UNLESS OTHERWISE NOTED.
5. ALL DIMENSIONS ARE TO FACE OF CURB UNLESS OTHERWISE NOTED.
6. ALL PAVEMENT MARKINGS SHALL BE PER THE CURRENT "TEXAS MANUAL ON UNIFORM TRAFFIC CONTROL DEVICES (M.U.T.C.D.): PART III MARKINGS". ALL STRIPING TO BE THERMOPLASTIC.
7. FOR STANDARD STREET END BARRICADE SEE DETAIL ON SHEET 44.

PROFILE LEGEND

- PROPOSED GRADE
- PROPOSED SUBGRADE
- EXISTING GRADE
- PROPOSED CURB INLET

CARL STERN DR
DESIGN SPEED - 30 MPH

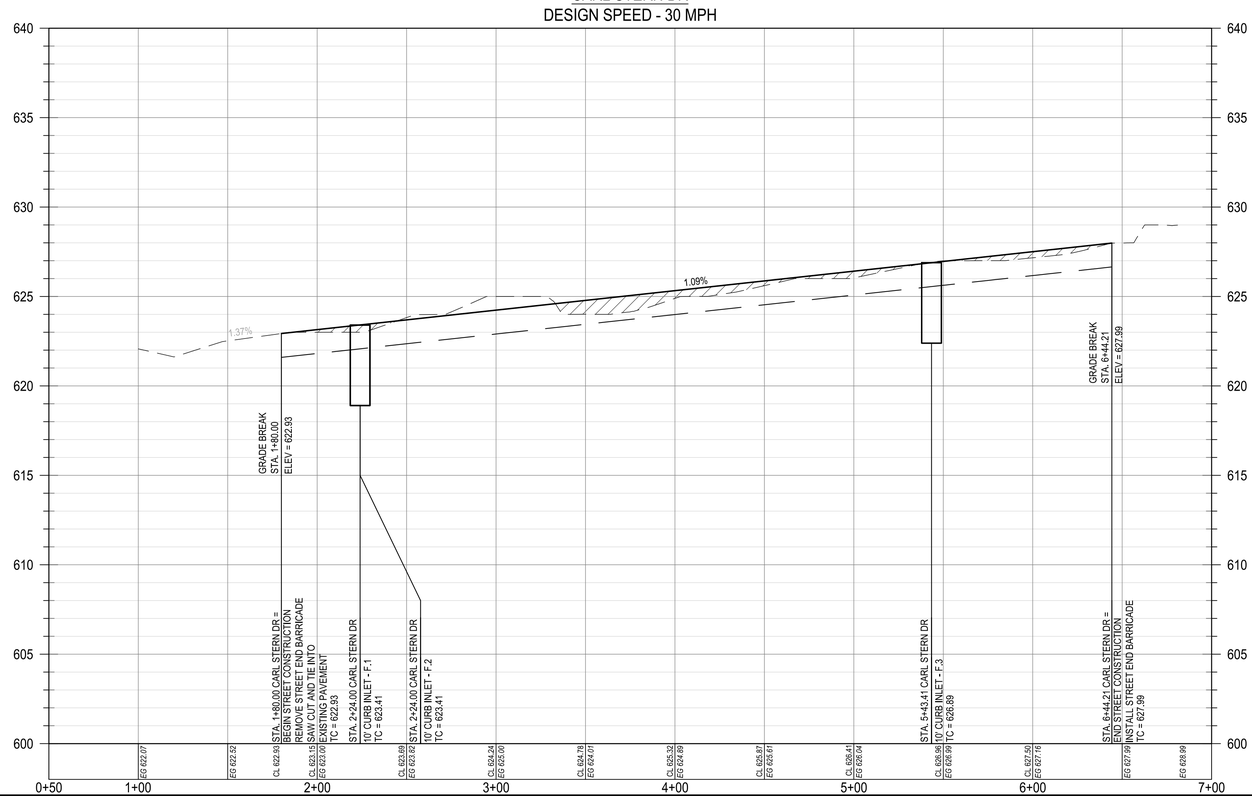

REV	DESCRIPTION	DATE	APR

DESIGNED BY: DAZ
REVIEWED BY: TMH
DRAWN BY: DAZ

BGE, INC.
1701 DIRECTORS BOULEVARD, SUITE 1000
AUSTIN, TX 78744
TBPE Registration No. F-1046
TEL: 512-879-0400 www.bgeinc.com

COTTONWOOD CREEK, PHASE II
HUTTO, TEXAS

CARL STERN DR

SUBMITTAL DATE: 03-15-2021

TIMOTHY M. HOLLAND 94848 LICENSED PROFESSIONAL ENGINEER 07/08/2021

SHEET 7 OF 54

Record Drawing

G:\TXC\Projects\Lennar\8390-00-Cottonwood_PH2\LDV01_CADD\01_Sits\C-SP-ROAD-PAP-PH-2.dwg Layout: CARL STERN DR Plotted: 7/7/2021 4:26:37 PM

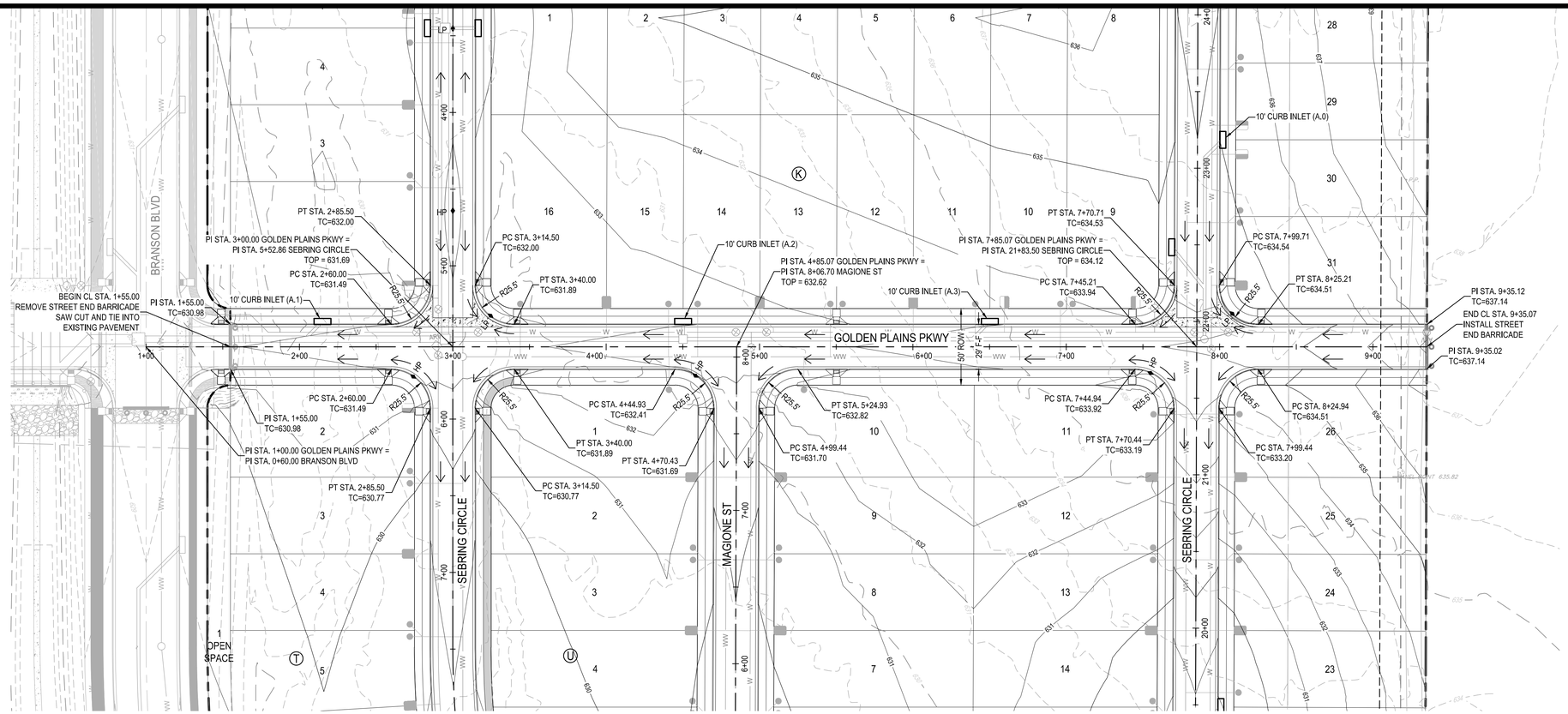

GOLDEN PLAINS PKWY
DESIGN SPEED - 30 MPH

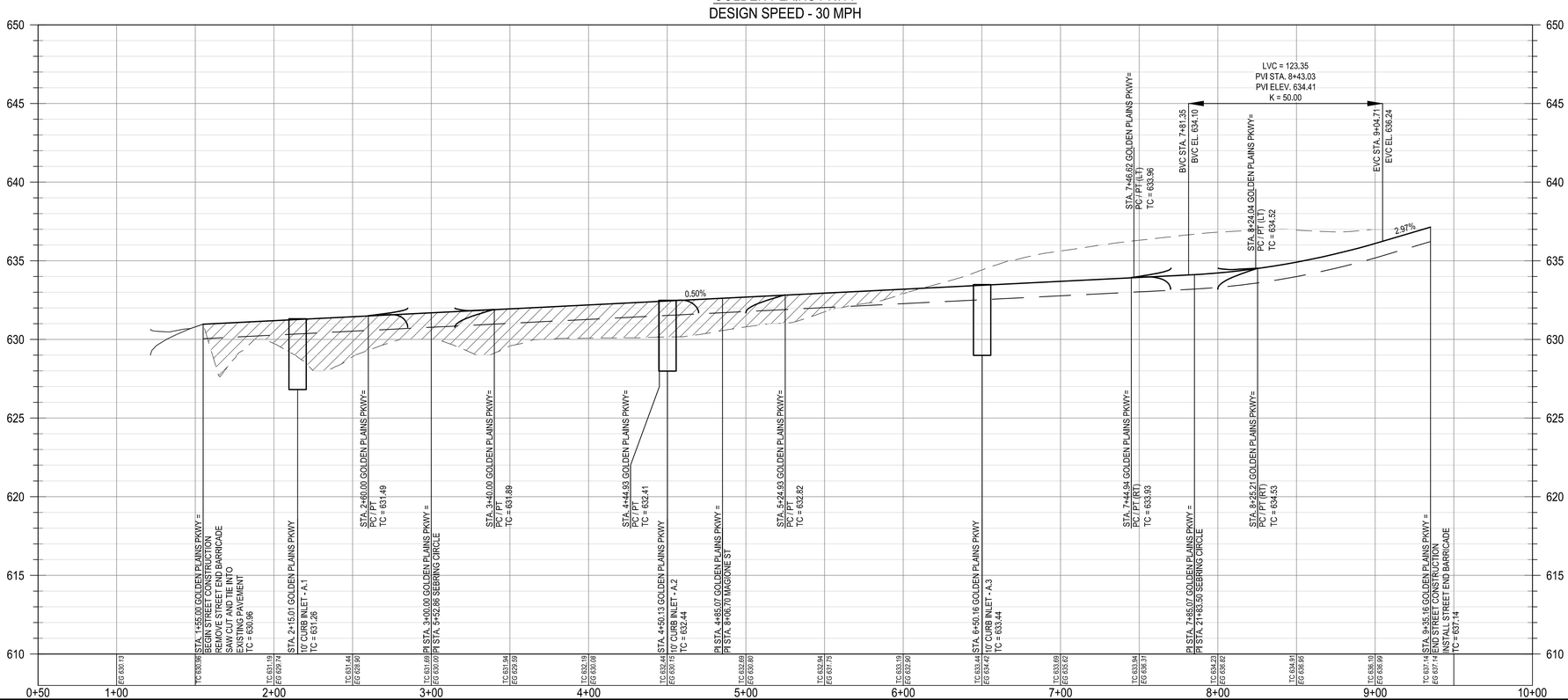

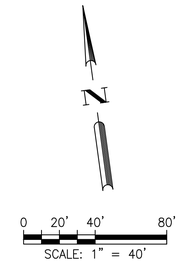

LEGEND

- PROPERTY BOUNDARY
- PROPOSED RIGHT OF WAY
- EXISTING MAJOR CONTOUR
- EXISTING MINOR CONTOUR
- PROPOSED MAJOR CONTOUR
- PROPOSED MINOR CONTOUR
- OE — OVERHEAD ELECTRIC
- HAND RAIL
- 28 — LOT NUMBER
- ROAD CENTERLINE
- RIBBON CURB
- CURB AND GUTTER
- DIRECTION OF FLOW
- CURB INLET
- 5' SIDEWALK TO BE CONSTRUCTED WITH SUBDIVISION IMPROVEMENTS (TYP)
- 5' SIDEWALK TO BE CONSTRUCTED BY BUILDER (TYP)
- CURB RAMP
- CONCRETE VALLEY GUTTER

NOTES:

1. ALL CURB RETURN RADII TO BE 25.5' AT FACE OF CURB UNLESS OTHERWISE NOTED.
2. THE LOCATION OF EXISTING UNDERGROUND UTILITIES ARE SHOWN IN AN APPROXIMATE WAY AND HAVE NOT BEEN INDEPENDENTLY VERIFIED BY THE OWNER OR ITS REPRESENTATIVE. THE CONTRACTOR SHALL DETERMINE THE EXACT LOCATION OF ALL EXISTING UTILITIES BEFORE COMMENCING WORK. THE CONTRACTOR AGREES TO BE FULLY RESPONSIBLE FOR ANY AND ALL DAMAGES WHICH MIGHT BE ASSOCIATED WITH THE CONTRACTORS FAILURE TO LOCATE AND PRESERVE ANY AND ALL UNDERGROUND UTILITIES.
3. SIDEWALKS ADJACENT TO SINGLE FAMILY LOTS ARE TO BE CONSTRUCTED CONCURRENTLY WITH EACH SINGLE FAMILY HOUSE.
4. ALL CURBS TO BE CURB AND GUTTER UNLESS OTHERWISE NOTED.
5. ALL DIMENSIONS ARE TO FACE OF CURB UNLESS OTHERWISE NOTED.
6. ALL PAVEMENT MARKINGS SHALL BE PER THE CURRENT "TEXAS MANUAL ON UNIFORM TRAFFIC CONTROL DEVICES (M.U.T.C.D.): PART III MARKINGS". ALL STRIPING TO BE THERMOPLASTIC.
7. FOR STANDARD STREET END BARRICADE SEE DETAIL ON SHEET 44.

PROFILE LEGEND

- PROPOSED GRADE
- PROPOSED SUBGRADE
- EXISTING GRADE
- PROPOSED CURB INLET

REV	DESCRIPTION	DATE	APR

DESIGNED BY: DAZ
REVIEWED BY: TMH
DRAWN BY: DAZ

BGE
BGE, INC.
1701 DIRECTORS BOULEVARD, SUITE 1000
AUSTIN, TX 78744
TBPE Registration No. F-1046
TEL: 512-879-0400 www.bowmgay.com

COTTONWOOD CREEK, PHASE II
HUTTO, TEXAS

GOLDEN PLAINS PKWY

SUBMITTAL DATE: 03-15-2021

TIMOTHY M. HOLLAND
94548
LICENSED
PROFESSIONAL ENGINEER
07/08/2021

SHEET
8 OF 54

Record Drawing

G:\TXCI\Projects\Lennar\8399-00-Cottonwood_PH2\LDV01_CADD\01_Sht\C-SP-ROAD-P&P-PH2.dwg Layout: GOLDEN PLAINS PKWY Plotted: 7/8/2021 3:02:57 PM

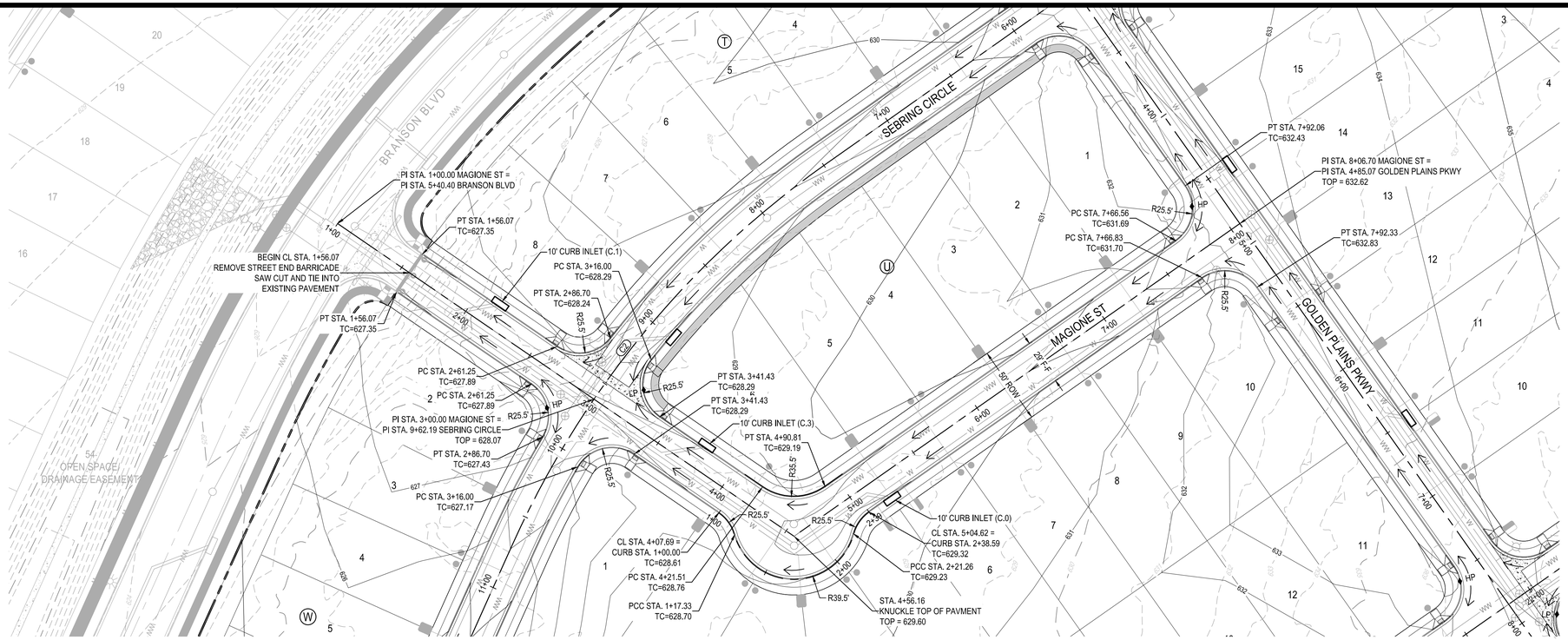

0 20' 40' 80'
SCALE: 1" = 40'

LEGEND

- PROPERTY BOUNDARY
- PROPOSED RIGHT OF WAY
- EXISTING MAJOR CONTOUR
- EXISTING MINOR CONTOUR
- PROPOSED MAJOR CONTOUR
- PROPOSED MINOR CONTOUR
- OE — OVERHEAD ELECTRIC
- HAND RAIL
- 28 — LOT NUMBER
- ROAD CENTERLINE
- RIBBON CURB
- CURB AND GUTTER
- DIRECTION OF FLOW
- CURB INLET
- 5' SIDEWALK TO BE CONSTRUCTED WITH SUBDIVISION IMPROVEMENTS (TYP)
- 5' SIDEWALK TO BE CONSTRUCTED BY BUILDER (TYP)
- CURB RAMP
- CONCRETE VALLEY GUTTER

Curve Table: Alignments					
CURVE	DELTA ANGLE	RADIUS	ARC LENGTH	CHORD DIRECTION	CHORD DISTANCE
C2	30°35'09"	600.00'	320.29'	S07° 31' 37.57"E	316.50'

NOTES:

1. ALL CURB RETURN RADII TO BE 25.5' AT FACE OF CURB UNLESS OTHERWISE NOTED.
2. THE LOCATION OF EXISTING UNDERGROUND UTILITIES ARE SHOWN IN AN APPROXIMATE WAY AND HAVE NOT BEEN INDEPENDENTLY VERIFIED BY THE OWNER OR ITS REPRESENTATIVE. THE CONTRACTOR SHALL DETERMINE THE EXACT LOCATION OF ALL EXISTING UTILITIES BEFORE COMMENCING WORK. THE CONTRACTOR AGREES TO BE FULLY RESPONSIBLE FOR ANY AND ALL DAMAGES WHICH MIGHT BE ASSOCIATED WITH THE CONTRACTORS FAILURE TO LOCATE AND PRESERVE ANY AND ALL UNDERGROUND UTILITIES.
3. SIDEWALKS ADJACENT TO SINGLE FAMILY LOTS ARE TO BE CONSTRUCTED CONCURRENTLY WITH EACH SINGLE FAMILY HOUSE.
4. ALL CURBS TO BE CURB AND GUTTER UNLESS OTHERWISE NOTED.
5. ALL DIMENSIONS ARE TO FACE OF CURB UNLESS OTHERWISE NOTED.
6. ALL PAVEMENT MARKINGS SHALL BE PER THE CURRENT "TEXAS MANUAL ON UNIFORM TRAFFIC CONTROL DEVICES (M.U.T.C.D.): PART III MARKINGS". ALL STRIPING TO BE THERMOPLASTIC.
7. FOR STANDARD STREET END BARRICADE SEE DETAIL ON SHEET 44.

PROFILE LEGEND

- PROPOSED GRADE
- PROPOSED SUBGRADE
- EXISTING GRADE
- PROPOSED CURB INLET

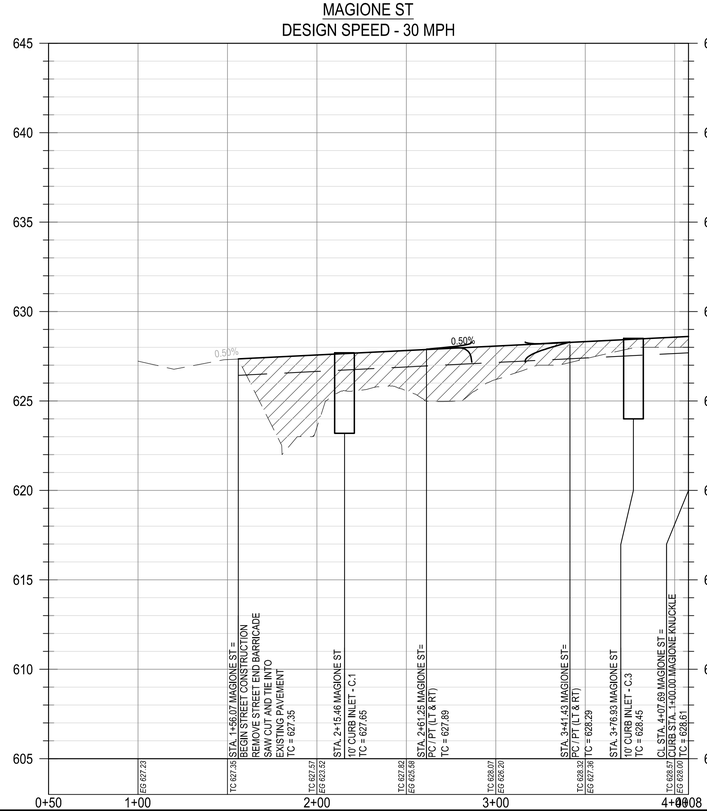

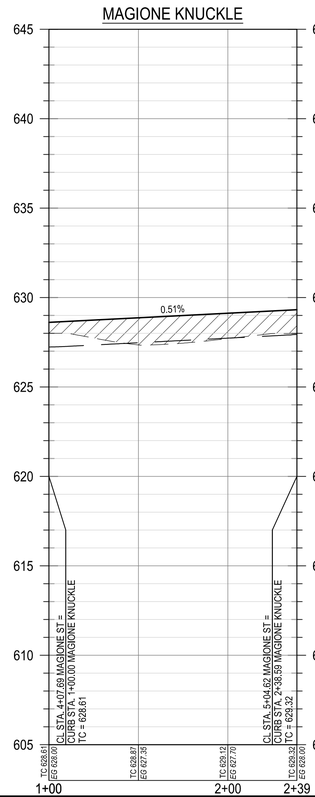

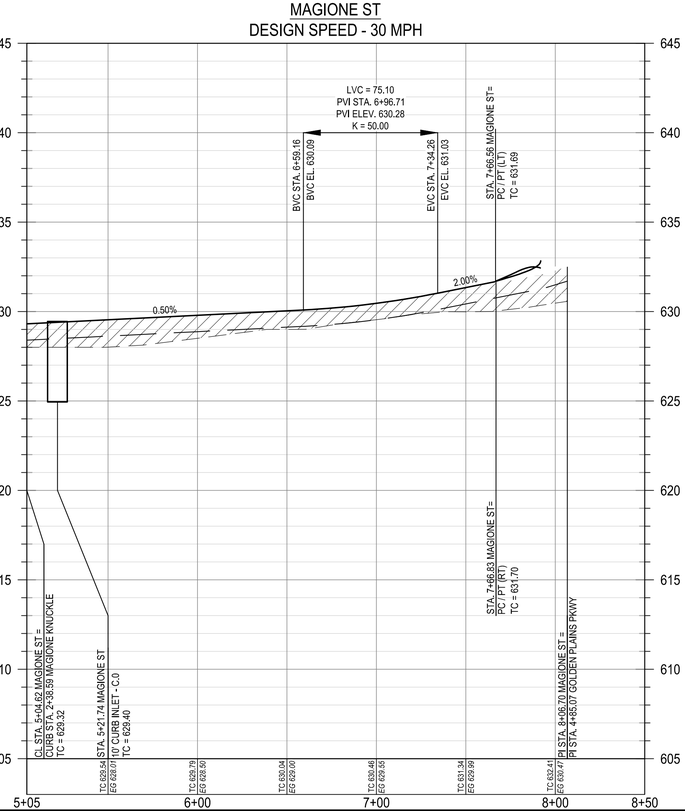

							APR
							DATE
							DESCRIPTION
◁	◁	◁	◁	◁	◁		REV

DESIGNED BY: DAZ
REVIEWED BY: TMH
DRAWN BY: DAZ

BGE, INC.
1701 DIRECTORS BOULEVARD, SUITE 1000
AUSTIN, TX 78744
TBPE Registration No. F-1046
TEL: 512-879-0400 www.bgeinpgay.com

COTTONWOOD CREEK, PHASE II
HUTTO, TEXAS

MAGIONE ST

SUBMITTAL DATE: 03-15-2021

STATE OF TEXAS
TIMOTHY M. HOLLAND
94548
LICENSED
PROFESSIONAL ENGINEER
07/08/2021

SHEET
9 OF 54

Record Drawing

G:\TXCI\Projects\Lennar\8399-00-Cottonwood_PH2\LDV01_CADD\01_Sht\C-SR-ROAD-P&P-PH-2.dwg Layout: MAGIONE ST Plotted: 7/8/2021 3:03:58 PM

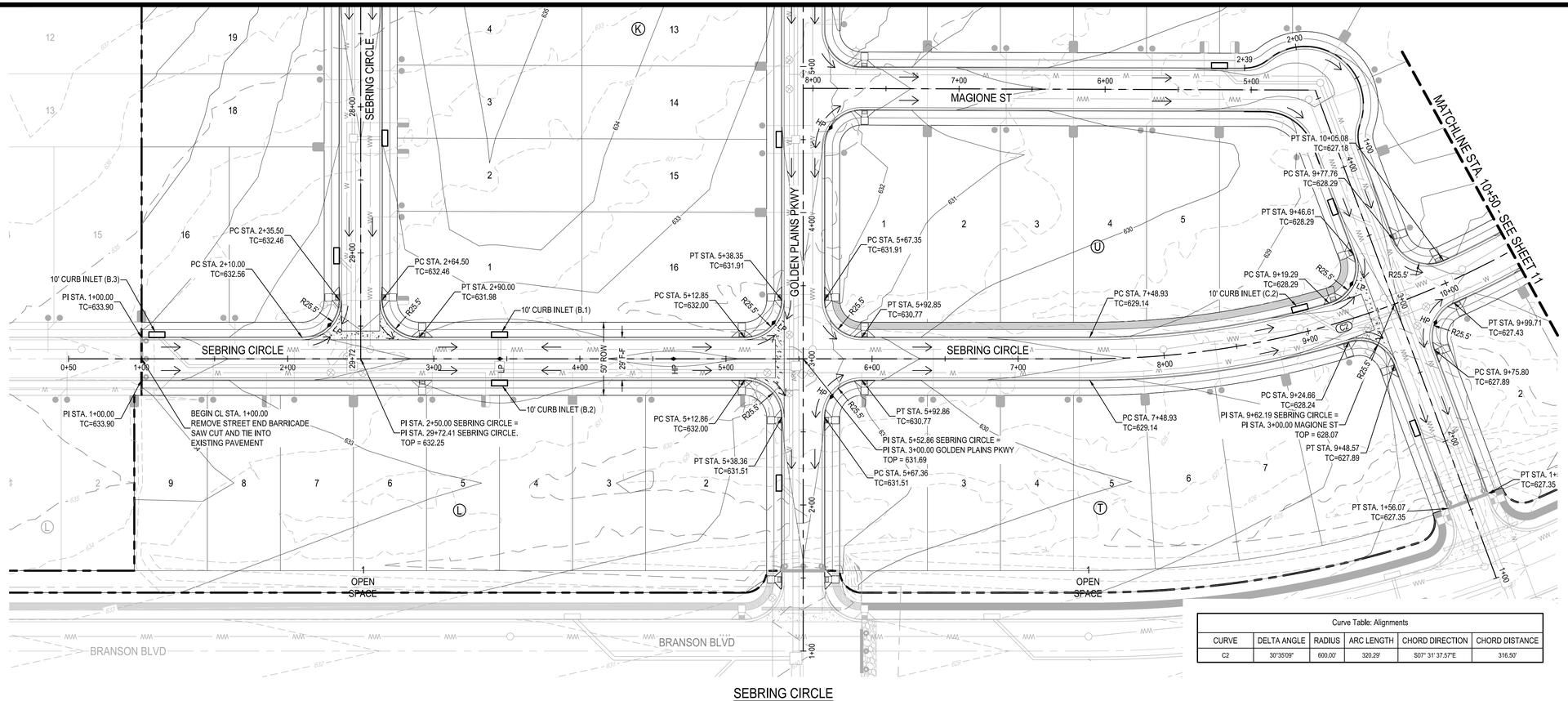

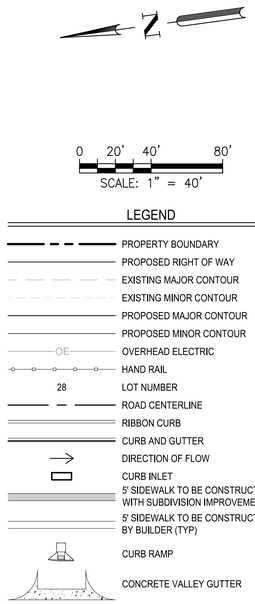

Curve Table: Alignments					
CURVE	DELTA ANGLE	RADIUS	ARC LENGTH	CHORD DIRECTION	CHORD DISTANCE
C2	30°35'09"	600.00'	320.29'	S07° 31' 37.57"E	316.50'

NOTES:

1. ALL CURB RETURN RADII TO BE 25.5' AT FACE OF CURB UNLESS OTHERWISE NOTED.
2. THE LOCATION OF EXISTING UNDERGROUND UTILITIES ARE SHOWN IN AN APPROXIMATE WAY AND HAVE NOT BEEN INDEPENDENTLY VERIFIED BY THE OWNER OR ITS REPRESENTATIVE. THE CONTRACTOR SHALL DETERMINE THE EXACT LOCATION OF ALL EXISTING UTILITIES BEFORE COMMENCING WORK. THE CONTRACTOR AGREES TO BE FULLY RESPONSIBLE FOR ANY AND ALL DAMAGES WHICH MIGHT BE ASSOCIATED WITH THE CONTRACTORS FAILURE TO LOCATE AND PRESERVE ANY AND ALL UNDERGROUND UTILITIES.
3. SIDEWALKS ADJACENT TO SINGLE FAMILY LOTS ARE TO BE CONSTRUCTED CONCURRENTLY WITH EACH SINGLE FAMILY HOUSE.
4. ALL CURBS TO BE CURB AND GUTTER UNLESS OTHERWISE NOTED.
5. ALL DIMENSIONS ARE TO FACE OF CURB UNLESS OTHERWISE NOTED.
6. ALL PAVEMENT MARKINGS SHALL BE PER THE CURRENT "TEXAS MANUAL ON UNIFORM TRAFFIC CONTROL DEVICES (M.U.T.C.D.): PART III MARKINGS". ALL STRIPING TO BE THERMOPLASTIC.
7. FOR STANDARD STREET END BARRICADE SEE DETAIL ON SHEET 44.

PROFILE LEGEND

- PROPOSED GRADE
- PROPOSED SUBGRADE
- EXISTING GRADE
- PROPOSED CURB INLET

SEBRING CIRCLE
DESIGN SPEED - 30 MPH

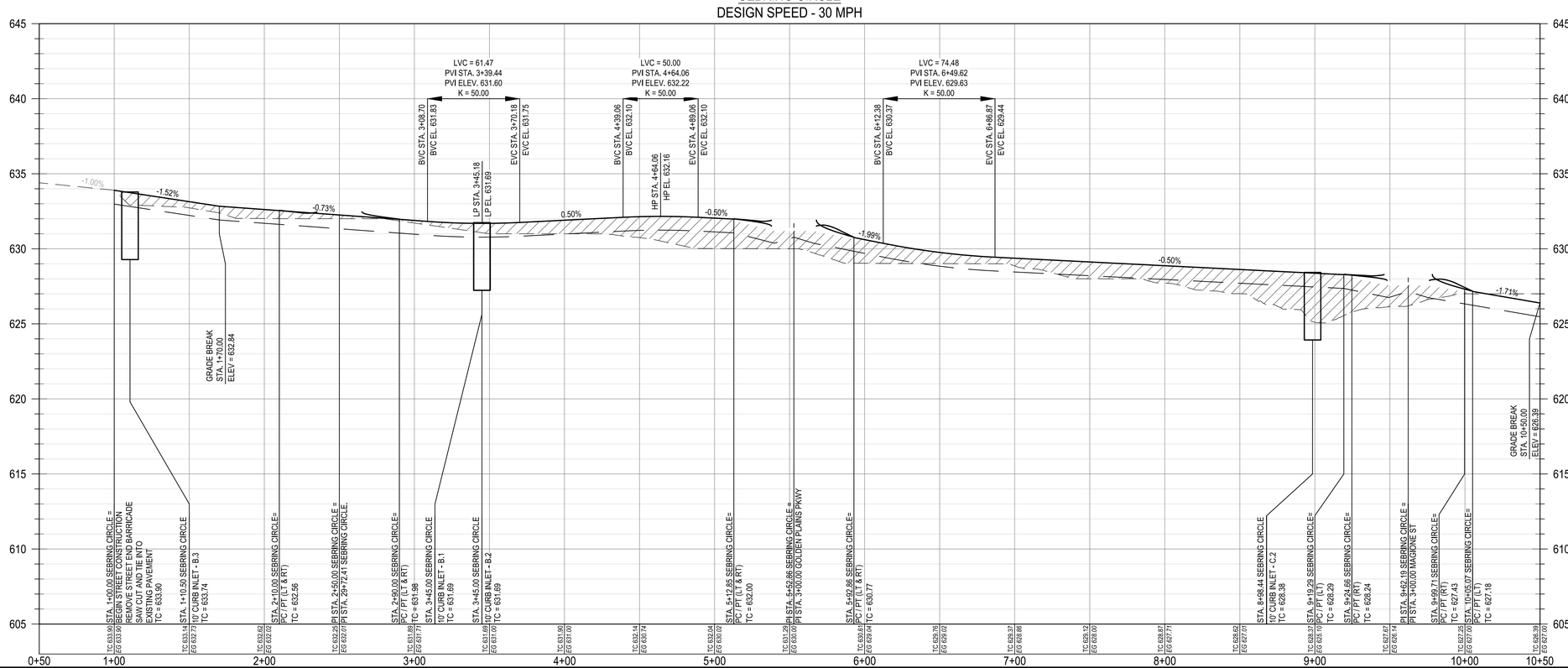

						APR
						DATE
						DESCRIPTION
						REV

DESIGNED BY: DAZ
REVIEWED BY: TMH
DRAWN BY: DAZ

BGE
BGE, INC.
1701 DIRECTORS BOULEVARD, SUITE 1000
AUSTIN, TX 78744
TBPE Registration No. F-1046
TEL: 512-879-0400 www.bgeinc.com

COTTONWOOD CREEK, PHASE II
HUTTO, TEXAS

SEBRING CIRCLE (1+00 TO 10+50)

SUBMITTAL DATE: 03-15-2021

STATE OF TEXAS
TIMOTHY M. HOLLAND
94548
LICENSED
PROFESSIONAL ENGINEER
07/08/2021

SHEET
10 OF 54

Record Drawing

G:\TXC\Projects\Lennar\8390-00-Cottonwood_PH2\LD\01_CADD\01_Sits\C-SP-ROAD-PAP-PH-2.dwg Layout: SEBRING CIRCLE (1+00 TO 10+50) Plotted: 7/7/2021 4:28:54 PM

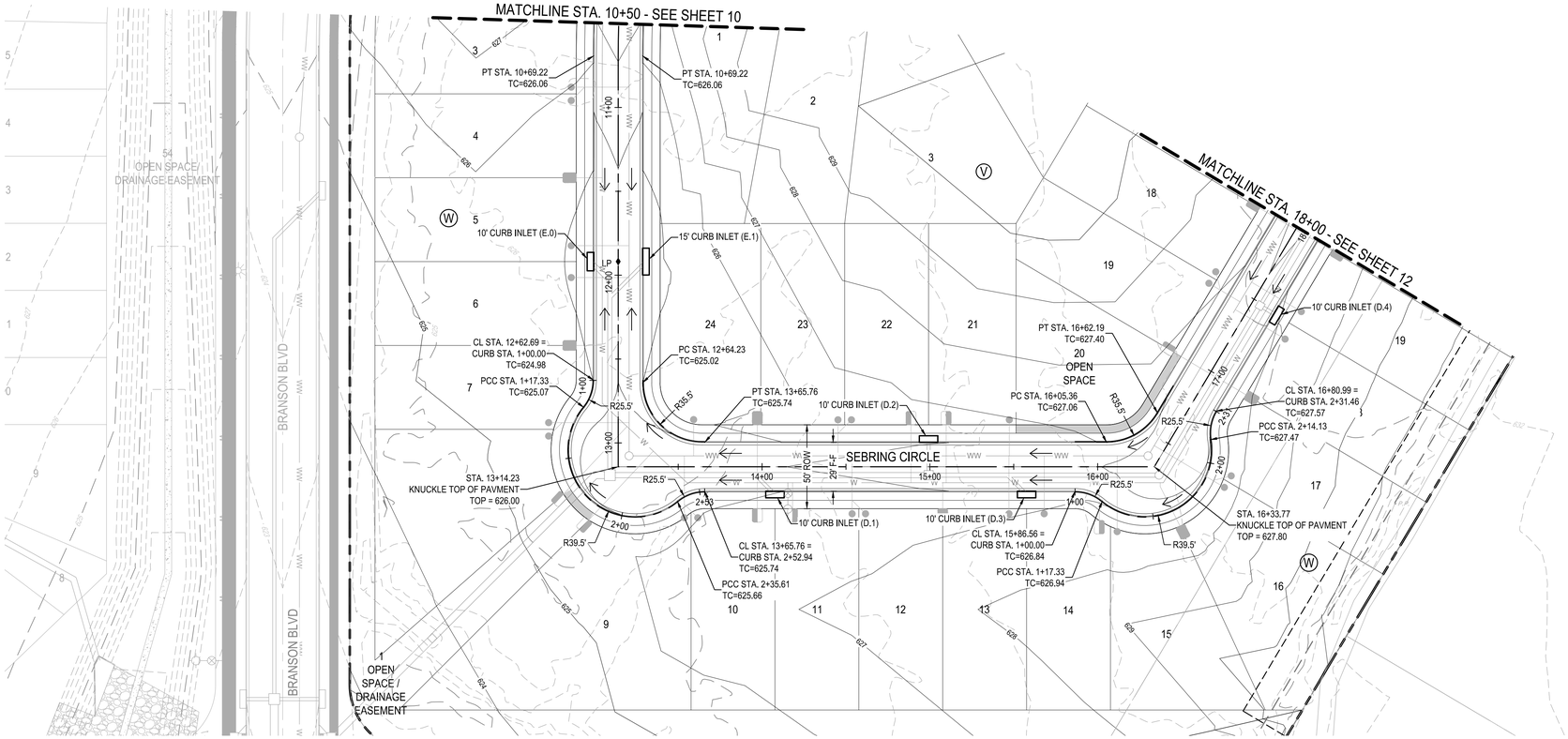

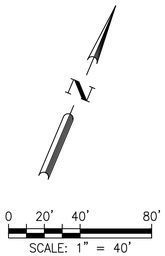

LEGEND

- PROPERTY BOUNDARY
- PROPOSED RIGHT OF WAY
- EXISTING MAJOR CONTOUR
- EXISTING MINOR CONTOUR
- PROPOSED MAJOR CONTOUR
- PROPOSED MINOR CONTOUR
- OVERHEAD ELECTRIC
- HAND RAIL
- 28 LOT NUMBER
- ROAD CENTERLINE
- RIBBON CURB
- CURB AND GUTTER
- DIRECTION OF FLOW
- CURB INLET
- 5' SIDEWALK TO BE CONSTRUCTED WITH SUBDIVISION IMPROVEMENTS (TYP)
- 5' SIDEWALK TO BE CONSTRUCTED BY BUILDER (TYP)
- CURB RAMP
- CONCRETE VALLEY GUTTER

NOTES:

1. ALL CURB RETURN RADII TO BE 25.5' AT FACE OF CURB UNLESS OTHERWISE NOTED.
2. THE LOCATION OF EXISTING UNDERGROUND UTILITIES ARE SHOWN IN AN APPROXIMATE WAY AND HAVE NOT BEEN INDEPENDENTLY VERIFIED BY THE OWNER OR ITS REPRESENTATIVE. THE CONTRACTOR SHALL DETERMINE THE EXACT LOCATION OF ALL EXISTING UTILITIES BEFORE COMMENCING WORK. THE CONTRACTOR AGREES TO BE FULLY RESPONSIBLE FOR ANY AND ALL DAMAGES WHICH MIGHT BE ASSOCIATED WITH THE CONTRACTORS FAILURE TO LOCATE AND PRESERVE ANY AND ALL UNDERGROUND UTILITIES.
3. SIDEWALKS ADJACENT TO SINGLE FAMILY LOTS ARE TO BE CONSTRUCTED CONCURRENTLY WITH EACH SINGLE FAMILY HOUSE.
4. ALL CURBS TO BE CURB AND GUTTER UNLESS OTHERWISE NOTED.
5. ALL DIMENSIONS ARE TO FACE OF CURB UNLESS OTHERWISE NOTED.
6. ALL PAVEMENT MARKINGS SHALL BE PER THE CURRENT "TEXAS MANUAL ON UNIFORM TRAFFIC CONTROL DEVICES (M.U.T.C.D.): PART III MARKINGS". ALL STRIPING TO BE THERMOPLASTIC.
7. FOR STANDARD STREET END BARRICADE SEE DETAIL ON SHEET 44.

PROFILE LEGEND

- PROPOSED GRADE
- PROPOSED SUBGRADE
- EXISTING GRADE
- PROPOSED CURB INLET

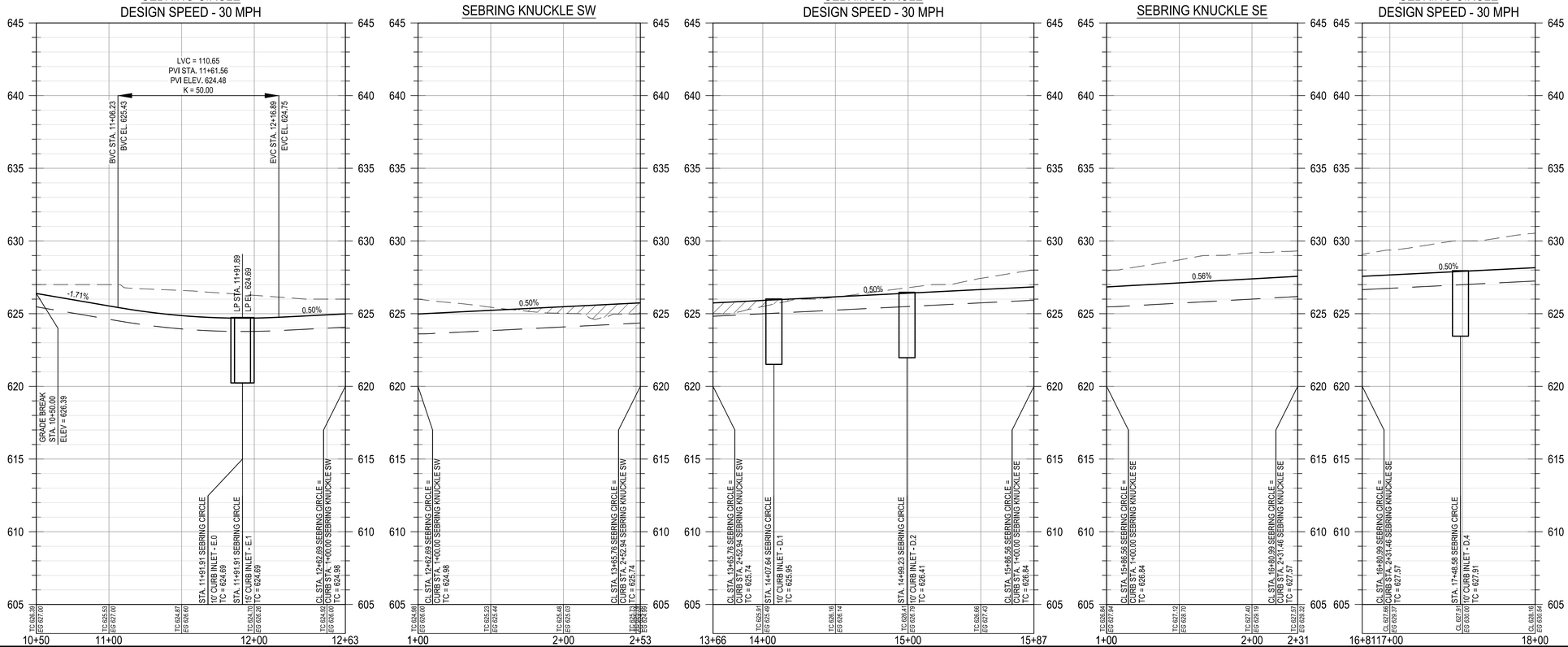

							APR
							DATE
							DESCRIPTION
							REV

DESIGNED BY: DAZ
REVIEWED BY: TMH
DRAWN BY: DAZ

BGE, INC.
1701 DIRECTORS BOULEVARD, SUITE 1000
AUSTIN, TX 78744
TBPE Registration No. F-1046
TEL: 512-879-0400 www.bgeinc.com

COTTONWOOD CREEK, PHASE II
HUTTO, TEXAS

SEBRING CIRCLE (10+50 TO 18+00)

SUBMITTAL DATE: 03-15-2021

TIMOTHY M. HOLLIS
94848
07/08/2021

SHEET
11 OF 54

Record Drawing

G:\TXC\Projects\Lennar\8390-00-Cottonwood_PH2\LDV01_CADD\01_Sits\C-SP-ROAD-P&P-PH-2.dwg Layout: SEBRING CIRCLE (10+50 TO 18+00) Plotted: 7/7/2021 4:29:29 PM

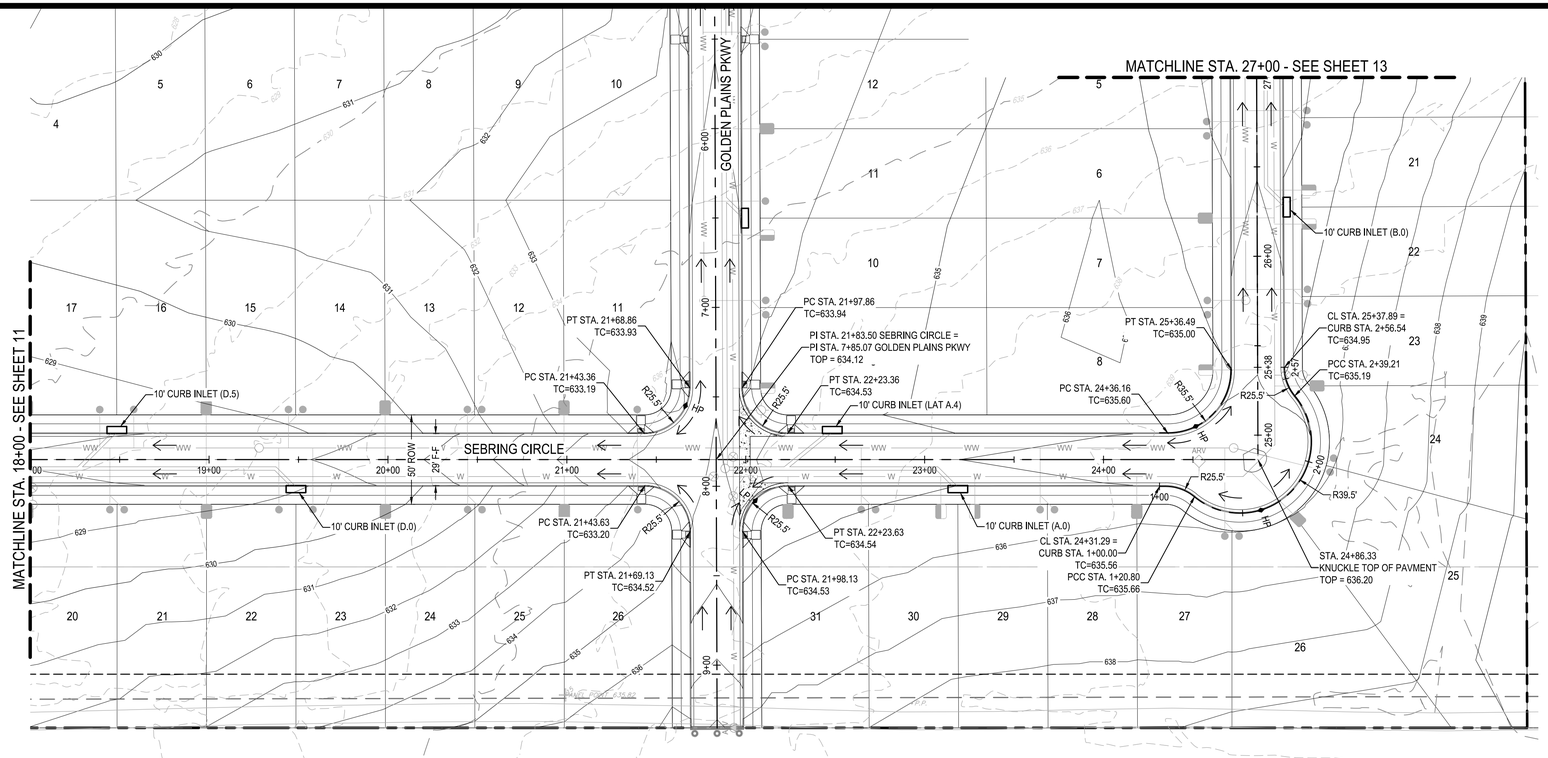

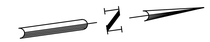

0 20' 40' 80'
SCALE: 1" = 40'

LEGEND

- PROPERTY BOUNDARY
- PROPOSED RIGHT OF WAY
- EXISTING MAJOR CONTOUR
- EXISTING MINOR CONTOUR
- PROPOSED MAJOR CONTOUR
- PROPOSED MINOR CONTOUR
- OE — OVERHEAD ELECTRIC
- HAND RAIL
- 28 — LOT NUMBER
- ROAD CENTERLINE
- RIBBON CURB
- CURB AND GUTTER
- DIRECTION OF FLOW
- CURB INLET
- 5' SIDEWALK TO BE CONSTRUCTED WITH SUBDIVISION IMPROVEMENTS (TYP)
- 5' SIDEWALK TO BE CONSTRUCTED BY BUILDER (TYP)
- CURB RAMP
- CONCRETE VALLEY GUTTER

NOTES:

1. ALL CURB RETURN RADII TO BE 25.5' AT FACE OF CURB UNLESS OTHERWISE NOTED.
2. THE LOCATION OF EXISTING UNDERGROUND UTILITIES ARE SHOWN IN AN APPROXIMATE WAY AND HAVE NOT BEEN INDEPENDENTLY VERIFIED BY THE OWNER OR ITS REPRESENTATIVE. THE CONTRACTOR SHALL DETERMINE THE EXACT LOCATION OF ALL EXISTING UTILITIES BEFORE COMMENCING WORK. THE CONTRACTOR AGREES TO BE FULLY RESPONSIBLE FOR ANY AND ALL DAMAGES WHICH MIGHT BE ASSOCIATED WITH THE CONTRACTORS FAILURE TO LOCATE AND PRESERVE ANY AND ALL UNDERGROUND UTILITIES.
3. SIDEWALKS ADJACENT TO SINGLE FAMILY LOTS ARE TO BE CONSTRUCTED CONCURRENTLY WITH EACH SINGLE FAMILY HOUSE.
4. ALL CURBS TO BE CURB AND GUTTER UNLESS OTHERWISE NOTED.
5. ALL DIMENSIONS ARE TO FACE OF CURB UNLESS OTHERWISE NOTED.
6. ALL PAVEMENT MARKINGS SHALL BE PER THE CURRENT "TEXAS MANUAL ON UNIFORM TRAFFIC CONTROL DEVICES (M.U.T.C.D.): PART III MARKINGS". ALL STRIPING TO BE THERMOPLASTIC.
7. FOR STANDARD STREET END BARRICADE SEE DETAIL ON SHEET 44.

PROFILE LEGEND

- PROPOSED GRADE
- PROPOSED SUBGRADE
- EXISTING GRADE
- PROPOSED CURB INLET

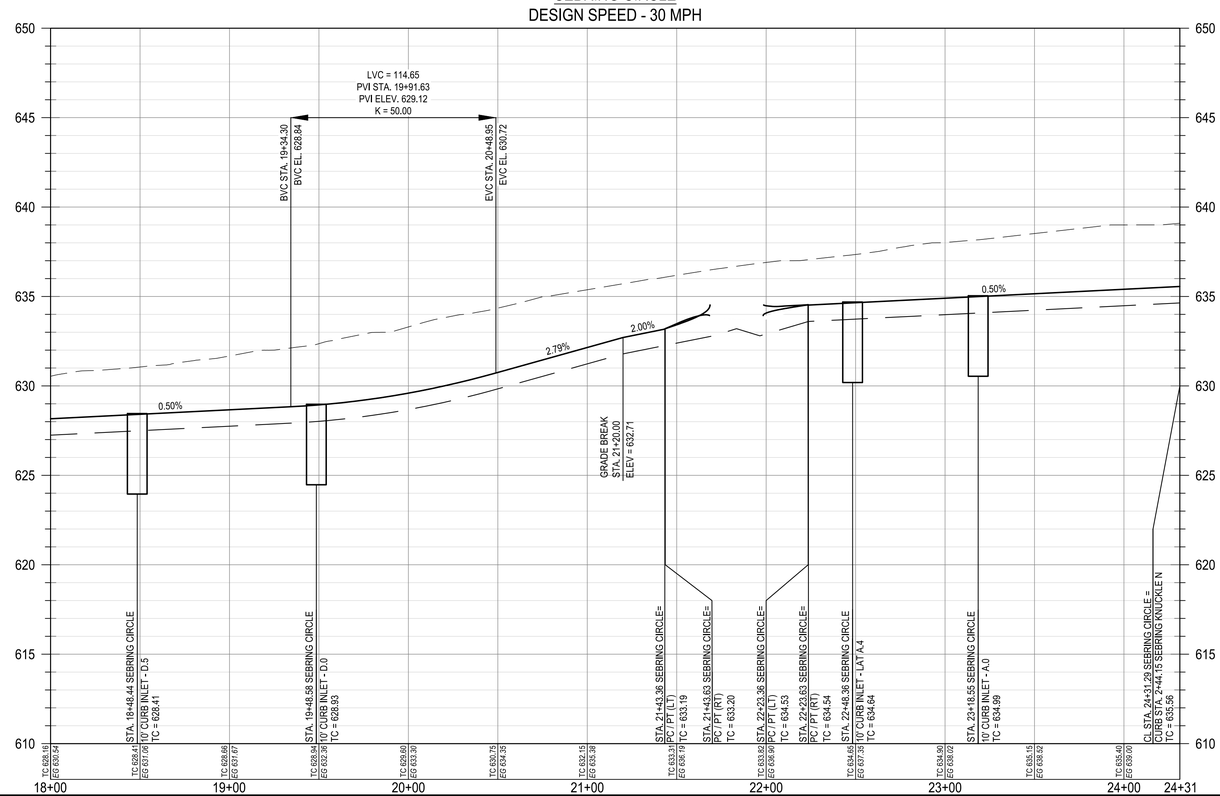

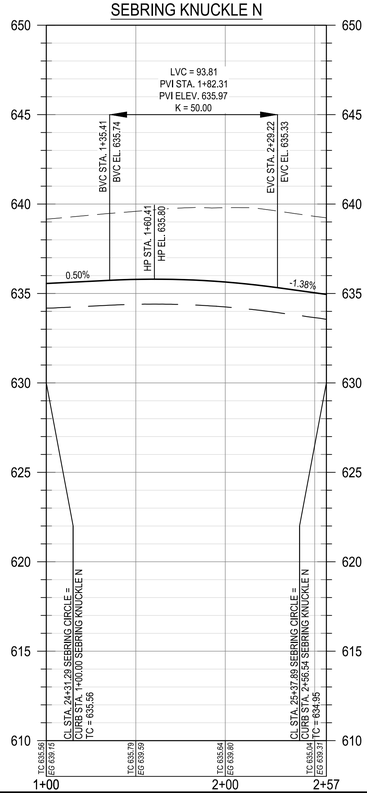

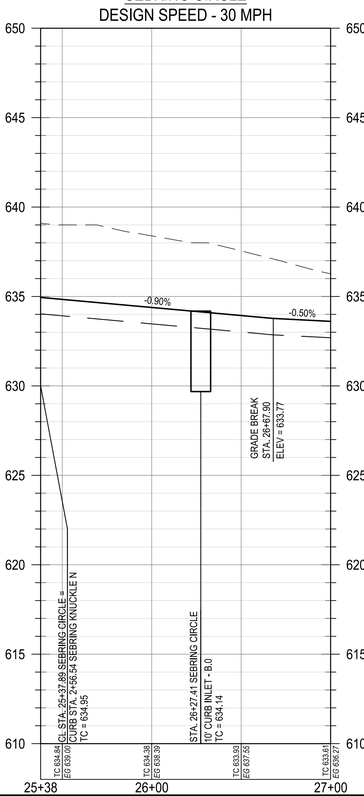

REV	DESCRIPTION	DATE	APR

DESIGNED BY: DAZ
REVIEWED BY: TMH
DRAWN BY: DAZ

BGE
BGE, INC.
1701 DIRECTORS BOULEVARD, SUITE 1000
AUSTIN, TX 78744
TBPE Registration No. F-1046
TEL: 512-879-0400 www.bgeinc.com

COTTONWOOD CREEK, PHASE II
HUTTO, TEXAS

SEBRING CIRCLE (18+00 TO 27+00)

SUBMITTAL DATE: 03-15-2021

STATE OF TEXAS
TIMOTHY M. HOLLAND
94848
LICENSED
PROFESSIONAL ENGINEER
07/08/2021

SHEET
12 OF 54

Record Drawing

G:\TXC\Projects\Lennar\8390-00-Cottonwood_PH2\LDV01_CADD\01_Sits\C-SP-ROAD-PAP-PH2.dwg Layout: SEBRING CIRCLE (18+00 TO 27+00) Plotted: 7/8/2021 3:06:29 PM

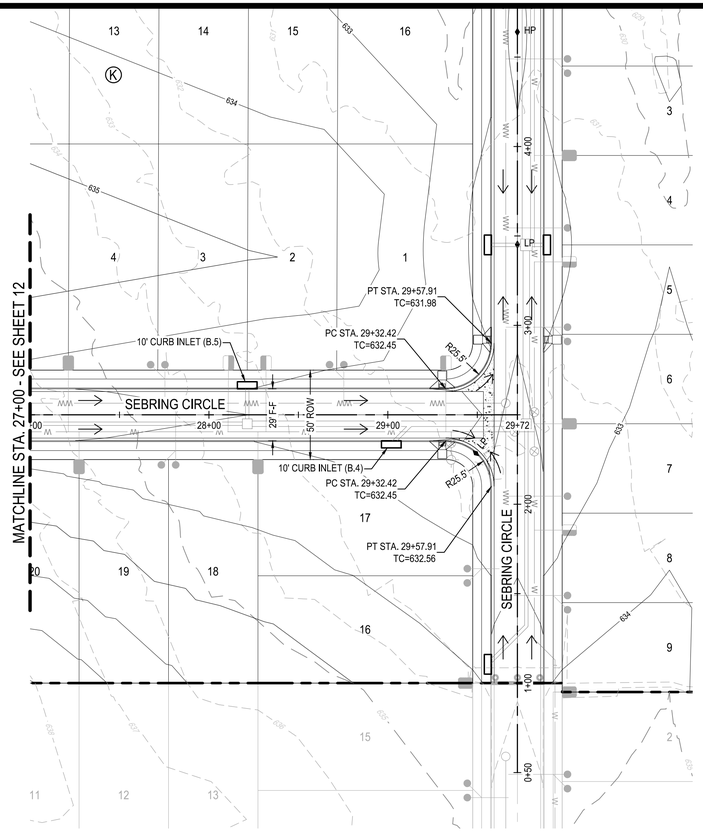

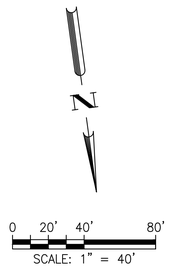

LEGEND

- PROPERTY BOUNDARY
- PROPOSED RIGHT OF WAY
- EXISTING MAJOR CONTOUR
- EXISTING MINOR CONTOUR
- PROPOSED MAJOR CONTOUR
- PROPOSED MINOR CONTOUR
- OE — OVERHEAD ELECTRIC
- HAND RAIL
- 28 — LOT NUMBER
- ROAD CENTERLINE
- RIBBON CURB
- CURB AND GUTTER
- DIRECTION OF FLOW
- CURB INLET
- 5' SIDEWALK TO BE CONSTRUCTED WITH SUBDIVISION IMPROVEMENTS (TYP)
- 5' SIDEWALK TO BE CONSTRUCTED BY BUILDER (TYP)
- CURB RAMP
- CONCRETE VALLEY GUTTER

NOTES:

1. ALL CURB RETURN RADII TO BE 25.5' AT FACE OF CURB UNLESS OTHERWISE NOTED.
2. THE LOCATION OF EXISTING UNDERGROUND UTILITIES ARE SHOWN IN AN APPROXIMATE WAY AND HAVE NOT BEEN INDEPENDENTLY VERIFIED BY THE OWNER OR ITS REPRESENTATIVE. THE CONTRACTOR SHALL DETERMINE THE EXACT LOCATION OF ALL EXISTING UTILITIES BEFORE COMMENCING WORK. THE CONTRACTOR AGREES TO BE FULLY RESPONSIBLE FOR ANY AND ALL DAMAGES WHICH MIGHT BE ASSOCIATED WITH THE CONTRACTORS FAILURE TO LOCATE AND PRESERVE ANY AND ALL UNDERGROUND UTILITIES.
3. SIDEWALKS ADJACENT TO SINGLE FAMILY LOTS ARE TO BE CONSTRUCTED CONCURRENTLY WITH EACH SINGLE FAMILY HOUSE.
4. ALL CURBS TO BE CURB AND GUTTER UNLESS OTHERWISE NOTED.
5. ALL DIMENSIONS ARE TO FACE OF CURB UNLESS OTHERWISE NOTED.
6. ALL PAVEMENT MARKINGS SHALL BE PER THE CURRENT "TEXAS MANUAL ON UNIFORM TRAFFIC CONTROL DEVICES (M.U.T.C.D.): PART III MARKINGS". ALL STRIPING TO BE THERMOPLASTIC.
7. FOR STANDARD STREET END BARRICADE SEE DETAIL ON SHEET 44.

PROFILE LEGEND

- PROPOSED GRADE
- PROPOSED SUBGRADE
- EXISTING GRADE
- PROPOSED CURB INLET

SEBRING CIRCLE.
DESIGN SPEED - 30 MPH

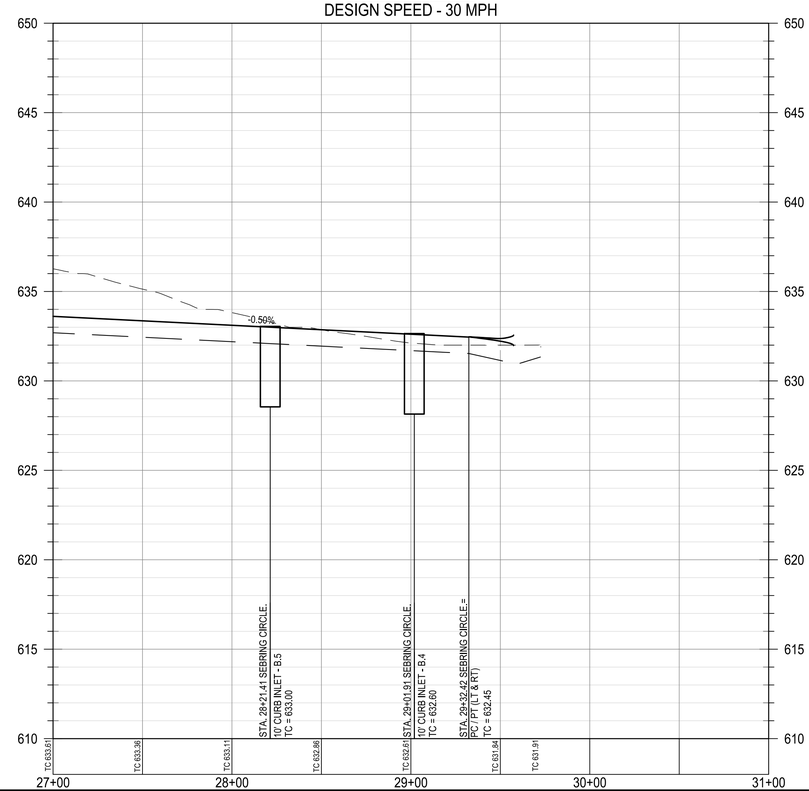

REV	DESCRIPTION	DATE	APR

DESIGNED BY: DAZ
REVIEWED BY: TMH
DRAWN BY: DAZ

BGE, INC.
1701 DIRECTORS BOULEVARD, SUITE 1000
AUSTIN, TX 78744
TBPE Registration No. F-1046
TEL: 512-879-0400 www.bgeinc.com

COTTONWOOD CREEK, PHASE II
HUTTO, TEXAS

SEBRING CIRCLE (27+00 TO END)

SUBMITTAL DATE: 03-15-2021

STATE OF TEXAS
TIMOTHY M. HOLLAND
94548
LICENSED
PROFESSIONAL ENGINEER
07/08/2021

SHEET
13 OF 54

G:\TXC\Projects\Lennar\8390-00-Cottonwood_PH2\LDV01_CADD\01_Sits\C-SP-ROAD-PAP-PH-2.dwg Layout: SEBRING CIRCLE (27+00 TO END) Plotted: 7/7/2021 4:30:41 PM

Record Drawing

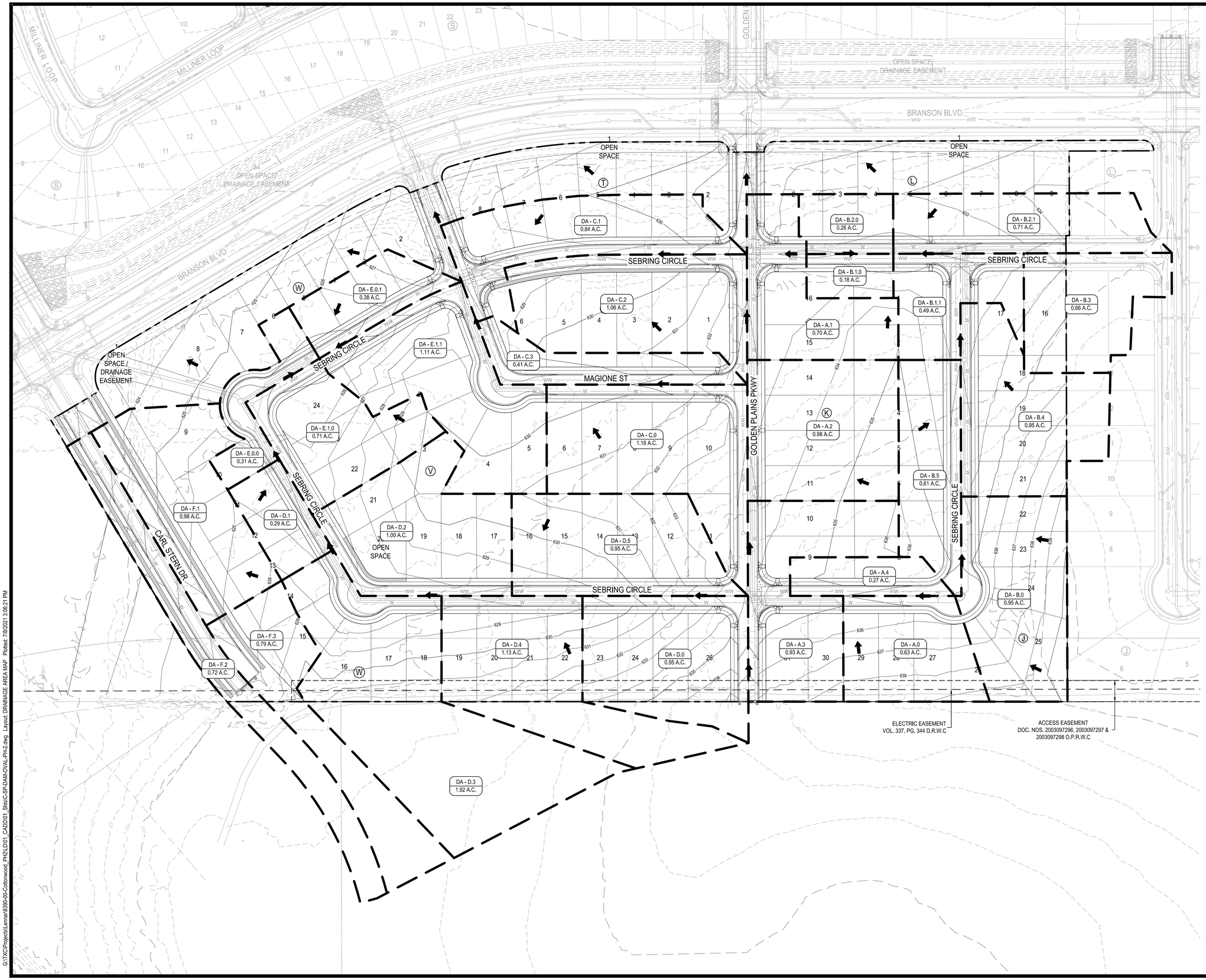

REV	DESCRIPTION	DATE	APR

DESIGNED BY: DAZ
REVIEWED BY: TMH
DRAWN BY: DAZ

BGE

BGE, INC.
1701 DIRECTORS BOULEVARD, SUITE 1000
AUSTIN, TX 78744
TBPE Registration No. F-1046
TEL: 512-879-0400 www.bgeinc.com

COTTONWOOD CREEK, PHASE II
HUTTO, TEXAS

DRAINAGE AREA MAP

SUBMITTAL DATE: 03-15-2021

STATE OF TEXAS
TIMOTHY M. HOLLAND
94848
LICENSED
PROFESSIONAL ENGINEER
07/08/2021

SHEET
14 OF 54

Record Drawing

G:\TXC\Projects\Lennar\8390-00-Cottonwood_PH2\LD\01_CADD\01_Shts\C-SP-DAM-OVAL-PH-2.dwg Layout: DRAINAGE AREA MAP Plotted: 7/8/2021 3:06:21 PM

CALCULATION OF IMPERVIOUS COVER AND "C" VALUES

ASSUMPTIONS		
40 ft Lot	2601	sf
60-70 ft Lot	3550	sf
50 ft Lot	3400	sf
One half Street (residential) (50' ROW)	20	lf
One half Street (residential) (60' ROW)	25	lf
One half Street (collector) (80' ROW)	27	lf
Knuckle (50' radius)	9160	sf
Impervious C2	0.74	
Pervious C2	0.25	
Impervious C25	0.87	
Pervious C25	0.34	
Impervious C100	0.96	
Pervious C100	0.41	

Note: Street and knuckle impervious cover includes sidewalk

AREA	ACRES	# OF LOTS 40 FT	60-70 FT	50 FT	ST LENGTH (RES)	ST LENGTH (RES)	ST LENGTH (COL)	KNUCKLE	IC (SF)	IMPERV. COVER	C2	C25	C100
DA - A.1	0.70	0	0	2.75	354	0	0	0	16430	54%	0.514	0.626	0.706
DA - A.2	0.98	0	0	6	200	0	0	0	24400	57%	0.530	0.643	0.724
DA - A.3	0.93	0	0	4	430	0	0	0	22200	55%	0.519	0.630	0.711
DA - A.4	0.27	0	0	0.5	193	0	0	0.165	7071.4	60%	0.545	0.659	0.741
DA - A.0	0.63	0	0	3.5	116	0	0	0.335	17288.6	63%	0.559	0.674	0.756
DA - B.2.0	0.26	0	0	1.25	123	0	0	0	6710	59%	0.540	0.654	0.736
DA - B.2.1	0.71	0	0	3.5	395	0	0	0	19800	64%	0.564	0.679	0.762
DA - B.1.0	0.18	0	0	0.5	123	0	0	0	4160	53%	0.510	0.621	0.702
DA - B.1.1	0.49	0	0	1.5	356	0	0	0	12220	57%	0.531	0.643	0.725
DA - B.3	0.66	0	0	2.75	210	0	0	0	13550	47%	0.481	0.590	0.669
DA - B.4	0.95	0	0	5.5	274.5	0	0	0	24190	58%	0.536	0.650	0.732
DA - B.5	0.61	0	0	2.75	285	0	0	0.165	16561.4	62%	0.555	0.670	0.753
DA - B.0	0.95	0	0	4.5	140	0	0	0.335	21168.6	51%	0.501	0.611	0.691
DA - C.1	0.84	0	0	3.25	575	0	0	0	22550	62%	0.552	0.667	0.749
DA - C.2	1.06	0	0	5.67	489	0	0	0	29058	63%	0.558	0.674	0.756
DA - C.3	0.41	0	0	0.33	368	0	0	0.33	11504.8	64%	0.566	0.681	0.764
DA - C.0	1.18	0	0	5.5	536	0	0	0	29420	57%	0.530	0.643	0.725
DA - D.1	0.29	0	0	1.5	150	0	0	0	8100	64%	0.564	0.680	0.763
DA - D.2	1.00	0	0	4.25	292	0	0	0.33	23312.8	54%	0.512	0.624	0.704
DA - D.3	1.92	0	0	4	97	0	0	0.67	21677.2	26%	0.377	0.477	0.553
DA - D.4	1.13	0	0	4	200	0	0	0	17600	36%	0.425	0.530	0.607
DA - D.5	0.95	0	0	5.5	335	0	0	0	25400	61%	0.551	0.665	0.748
DA - D.0	0.95	0	0	4	408	0	0	0	21760	53%	0.508	0.619	0.699
DA - E.1.0	0.71	0	0	3.5	207	0	0	0.33	19062.8	62%	0.552	0.667	0.749
DA - E.1.1	1.11	0	0	4.25	307	0	0	0.67	26727.2	55%	0.521	0.633	0.714
DA - E.0.0	0.31	0	0	1	113	0	0	0.67	11797.2	87%	0.678	0.803	0.890
DA - E.0.1	0.38	0	0	1.75	209	0	0	0	10130	61%	0.550	0.664	0.747
DA - F.1	0.98	0	0	3	0	0	319	0	18813	44%	0.466	0.574	0.652
DA - F.2	0.72	0	0	0	0	0	783	0	21141	67%	0.580	0.697	0.781
DA - F.3	0.79	0	0	1	0	0	464	0	15928	46%	0.477	0.585	0.665

STREET / INLET CAPACITIES
25-YEAR

Crown Height Collect. 0.58
Crown Height Local 0.50

Drainage Area	Inlet Type	Upstream	Q(pass) (cfs)	$Q_{(25)}$ (cfs)	STREET CAPACITY Street Width (ft)	Slope (ft/ft)	a (ft)	Y_o (ft)	Ponded Width (ft)	INLET ON GRADE Q_a/L_a (ft)	Length Needed (ft)	Length (ft)	L/L_{need} '*=>Qpass	a/Y_o	Possible Q (cfs)	$Q_{(pass)}$ (cfs)	SUMP INLET Clogging Factor	$Q_{(25)}$ (cfs)	Allowable head (ft)	Inlet Length (ft)	Calculated head (ft)
DA - A.1	Grade Inlet	DA - A.2	0	3.5	30	0.0050	0.42	0.42	8.84	0.88	4.00	10	1.0	1.00	8.76	0					
DA - A.2	Grade Inlet	DA - A.3	0	5.1	30	0.0050	0.42	0.47	11.36	0.94	5.45	10	1.0	0.89	9.36	0					
DA - A.3	Grade Inlet	DA - A.4 DA - A.0	0	5.2	30	0.0050	0.42	0.47	11.55	0.94	5.53	10	1.0	0.88	9.40	0					
DA - A.4	Grade Inlet		0	1.8	30	0.0050	0.42	0.33	6.35	0.79	2.28	10	1.0	1.25	7.88	0					
DA - A.0	Grade Inlet		0	3.9	30	0.0050	0.42	0.43	9.42	0.89	4.37	10	1.0	0.97	8.92	0					
DA - B.2.0	Sump Inlet		0	1.5	30	0.0050	0.42	0.31	5.86								10%	5.60	0.5	10	0.35
DA - B.2.1	Sump Inlet		0	4.1	30	0.0073	0.42	0.41	8.68												
DA - B.1.0	Sump Inlet		0	1.1	30	0.0050	0.42	0.28	5.13								10%	3.80	0.5	10	0.27
DA - B.1.1	Sump Inlet	DA - B.3 DA - B.4 DA - B.5	0	2.7	30	0.0073	0.42	0.36	7.02												
DA - B.3	Grade Inlet		0	3.4	30	0.0152	0.42	0.34	6.58	0.80	4.26	10	1.0	1.22	7.97	0					
DA - B.4	Grade Inlet	DA - B.0	0	5.3	30	0.0050	0.42	0.48	11.75	0.94	5.62	10	1.0	0.87	9.43	0					
DA - B.5	Grade Inlet		0	3.6	30	0.0050	0.42	0.42	8.98	0.88	4.09	10	1.0	0.99	8.80	0					
DA - B.0	Grade Inlet		0	5.4	30	0.0090	0.42	0.44	9.60	0.90	6.02	10	1.0	0.96	8.97	0					
DA - C.1	Grade Inlet	DA - C.2 DA - C.3	0	4.5	30	0.0050	0.42	0.45	10.33	0.92	4.92	10	1.0	0.92	9.15	0					
DA - C.2	Grade Inlet		0	5.9	30	0.0050	0.42	0.49	13.32	0.96	6.13	10	1.0	0.84	9.62	0					
DA - C.3	Grade Inlet		0	2.6	30	0.0050	0.42	0.38	7.55	0.83	3.12	10	1.0	1.11	8.34	0					
DA - C.0	Grade Inlet		0	6.1	30	0.0050	0.42	0.50	14.41	0.97	6.30	10	1.0	0.83	9.69	0					
DA - D.1	Grade Inlet		0	1.8	30	0.0050	0.42	0.33	6.35	0.79	2.28	10	1.0	1.25	7.88	0					
DA - D.2	Grade Inlet	DA - D.5	0	5.2	30	0.0050	0.42	0.47	11.55	0.94	5.53	10	1.0	0.88	9.40	0					
DA - D.3	Grade Inlet	DA - D.4	0	5.1	30	0.0050	0.42	0.47	11.36	0.94	5.45	10	1.0	0.89	9.36	0					
DA - D.4	Grade Inlet	DA - D.0	0	3.4	30	0.0050	0.42	0.41	8.69	0.87	3.90	10	1.0	1.01	8.71	0					
DA - D.5	Grade Inlet		0	5.4	30	0.0050	0.42	0.48	11.97	0.95	5.71	10	1.0	0.87	9.46	0					
DA - D.0	Grade Inlet		0	3.6	30	0.0050	0.42	0.42	8.98	0.88	4.09	10	1.0	0.99	8.80	0					
DA - E.1.0	Sump Inlet	DA - D.2	0	4.1	30	0.0050	0.42	0.44	9.71								10%	9.70	0.5	15	0.41
DA - E.1.1	Sump Inlet	DA - C.0	0	5.6	30	0.0171	0.42	0.40	8.17												
DA - E.0.0	Sump Inlet	DA - D.3	0	2.1	30	0.0050	0.42	0.35	6.81								10%	4.40	0.5	10	0.30
DA - E.0.1	Sump Inlet		0	2.3	30	0.0171	0.42	0.30	5.40												
DA - F.1	Grade Inlet	DA - F.3	0	4.5	44	0.0109	0.42	0.37	8.86	0.83	5.41	10	1.0	1.11	8.32	0					
DA - F.2	Grade Inlet		0	4.5	44	0.0109	0.42	0.37	8.86	0.83	5.41	10	1.0	1.11	8.32	0					
DA - F.3	Grade Inlet		0	3.7	44	0.0109	0.42	0.35	8.09	0.81	4.60	10	1.0	1.19	8.05	0					

STREET / INLET CAPACITIES
100-YEAR

Drainage Area	Inlet Type	Upstream	$Q_{(100)}$ (cfs)	$Q_{(add)}$ (cfs)	$Q_{(pass)}$ (cfs)	$Q_{(int)}$ (cfs)	STREET CAPACITY Street Width (ft)	Slope (ft/ft)	a (ft)	Y_o (ft)	Ponded Width (ft)	INLET ON GRADE Q_a/L_a (ft)	Length Needed (ft)	Length (ft)	L/L_{need} '*=>Qpass	a/Y_o	Possible Q (cfs)	$Q_{(bypass)}$ (cfs)	SUMP INLET Clogging Factor	$Q_{(int)}$ (cfs)	Allowable head (ft)	Inlet Length (ft)	Calculated head (ft)
DA - A.1	Grade Inlet	DA - A.2 0 0	5.10		0.00	**5.10**	30	0.0050	0.42	0.47	11.36	0.94	5.45	10	1.0	0.89	9.36	0					
DA - A.2	Grade Inlet	DA - A.3 0 0	7.40		1.28	**6.12**	30	0.0050	0.42	0.50	14.68	0.97	7.64	10	1.0	0.83	9.69	0					
DA - A.3	Grade Inlet	DA - A.4 DA - A.0 0	7.40		1.28	**6.12**	30	0.0050	0.42	0.50	14.68	0.97	7.64	10	1.0	0.83	9.69	0					
DA - A.4	Grade Inlet	0 0 0	2.50		0.00	**2.50**	30	0.0050	0.42	0.37	7.41	0.83	3.02	10	1.0	1.12	8.28	0					
DA - A.0	Grade Inlet	0 0 0	5.50		0.00	**5.50**	30	0.0050	0.42	0.48	12.19	0.95	5.79	10	1.0	0.86	9.50	0					
DA - B.2.0	Sump Inlet	0 0 0	2.20		0.00	**2.20**	30	0.0050	0.42	0.36	6.97								10%	8.10	0.5	10	0.45
DA - B.2.1	Sump Inlet	0 0 0	5.90		0.00	**5.90**	30	0.0073	0.42	0.46	10.97												
DA - B.1.0	Sump Inlet	0 0 0	1.60		0.00	**1.60**	30	0.0050	0.42	0.32	6.02								10%	6.78	0.5	10	0.40
DA - B.1.1	Sump Inlet	DA - B.3 DA - B.4 DA - B.5	3.80	1.38	0.00	**5.18**	30	0.0073	0.42	0.44	10.00												
DA - B.3	Grade Inlet	0 0 0	4.90		0.00	**4.90**	30	0.0152	0.42	0.39	7.86	0.84	5.80	10	1.0	1.08	8.44	0					
DA - B.4	Grade Inlet	DA - B.0 0 0	7.50		1.38	**6.12**	30	0.0050	0.42	0.50	14.68	0.97	7.74	10	1.0	0.83	9.69	0					
DA - B.5	Grade Inlet	0 0 0	5.10	0.00	0.00	**5.10**	30	0.0050	0.42	0.47	11.36	0.94	5.45	10	1.0	0.89	9.36	0					
DA - B.0	Grade Inlet	0 0 0	7.70		0.00	**7.70**	30	0.0090	0.42	0.49	12.80	0.96	8.04	10	1.0	0.85	9.57	0					
DA - C.1	Grade Inlet	DA - C.2 DA - C.3 0	6.40	3.56	3.84	**6.12**	30	0.0050	0.42	0.50	14.68	0.97	10.28	10	1.0	0.83	9.69	0					
DA - C.2	Grade Inlet	0 0 0	8.40	1.28	3.56	**6.12**	30	0.0050	0.42	0.50	14.68	0.97	9.99	10	1.0	0.83	9.69	0					
DA - C.3	Grade Inlet	0 0 0	3.60	3.9	1.34	**6.12**	30	0.0050	0.42	0.50	14.68	0.97	7.70	10	1.0	0.83	9.69	0					
DA - C.0	Grade Inlet	0 0 0	8.70	1.28	3.86	**6.12**	30	0.0050	0.42	0.50	14.68	0.97	10.30	10	1.0	0.83	9.69	0					
DA - D.1	Grade Inlet	0 0 0	2.60	3.42	0.00	**6.02**	30	0.0050	0.42	0.50	13.85	0.97	6.23	10	1.0	0.84	9.66	0					
DA - D.2	Grade Inlet	DA - D.5 0 0	7.40	2.14	3.42	**6.12**	30	0.0050	0.42	0.50	14.68	0.97	9.84	10	1.0	0.83	9.69	0					
DA - D.3	Grade Inlet	DA - D.4 0 0	7.80		1.68	**6.12**	30	0.0050	0.42	0.50	14.68	0.97	8.05	10	1.0	0.83	9.69	0					
DA - D.4	Grade Inlet	DA - D.0 0 0	5.10	1.58	0.56	**6.12**	30	0.0050	0.42	0.50	14.68	0.97	6.89	10	1.0	0.83	9.69	0					
DA - D.5	Grade Inlet	0 0 0	7.70		1.58	**6.12**	30	0.0050	0.42	0.50	14.68	0.97	7.95	10	1.0	0.83	9.69	0					
DA - D.0	Grade Inlet	0 0 0	5.30		0.00	**5.30**	30	0.0050	0.42	0.48	11.75	0.94	5.62	10	1.0	0.87	9.43	0					
DA - E.1.0	Sump Inlet	DA - D.2 0 0	5.80		0.00	**5.80**	30	0.0050	0.42	0.49	12.99								10%	13.37	0.5	15	0.50
DA - E.1.1	Sump Inlet	DA - C.0 0 0	8.10	1.34	0.00	**9.44**	30	0.0171	0.42	0.47	11.37												
DA - E.0.0	Sump Inlet	DA - D.3 0 0	2.90		0.00	**2.90**	30	0.0050	0.42	0.39	7.98								10%	7.97	0.5	10	0.44
DA - E.0.1	Sump Inlet	0 0 0	3.20		0.00	**3.20**	30	0.0171	0.42	0.33	6.24												
DA - F.1	Grade Inlet	DA - F.3 0 0	6.50		0.00	**6.50**	44	0.0109	0.42	0.43	10.62	0.89	7.32	10	1.0	0.98	8.88	0					
DA - F.2	Grade Inlet	0 0 0	6.30		0.00	**6.30**	44	0.0109	0.42	0.42	10.45	0.88	7.14	10	1.0	0.99	8.83	0					
DA - F.3	Grade Inlet	0 0 0	5.30		0.00	**5.30**	44	0.0109	0.42	0.40	9.58	0.86	6.19	10	1.0	1.05	8.56	0					

Drainage Area	Total Area, acres	25 YR EVENT C	I, in/hr	Q, cfs	100 YR EVENT C	I, in/hr	Q, cfs
DA - A.1	0.70	0.626	8.08	**3.5**	0.706	10.27	**5.1**
DA - A.2	0.98	0.643	8.17	**5.1**	0.724	10.37	**7.4**
DA - A.3	0.93	0.630	8.82	**5.2**	0.711	11.11	**7.4**
DA - A.4	0.27	0.659	10.11	**1.8**	0.741	12.54	**2.5**
DA - A.0	0.63	0.674	9.20	**3.9**	0.756	11.54	**5.5**
DA - B.2.0	0.26	0.654	9.11	**1.5**	0.736	11.44	**2.2**
DA - B.2.1	0.71	0.679	8.58	**4.1**	0.762	10.84	**5.9**
DA - B.1.0	0.18	0.621	10.11	**1.1**	0.702	12.54	**1.6**
DA - B.1.1	0.49	0.643	8.41	**2.7**	0.725	10.64	**3.8**
DA - B.3	0.66	0.590	8.80	**3.4**	0.669	11.08	**4.9**
DA - B.4	0.95	0.650	8.51	**5.3**	0.732	10.76	**7.5**
DA - B.5	0.61	0.670	8.87	**3.6**	0.753	11.17	**5.1**
DA - B.0	0.95	0.611	9.32	**5.4**	0.691	11.67	**7.7**
DA - C.1	0.84	0.667	8.06	**4.5**	0.749	10.25	**6.4**
DA - C.2	1.06	0.674	8.23	**5.9**	0.756	10.44	**8.4**
DA - C.3	0.41	0.681	9.15	**2.6**	0.764	11.48	**3.6**
DA - C.0	1.18	0.643	8.04	**6.1**	0.725	10.22	**8.7**
DA - D.1	0.29	0.680	9.23	**1.8**	0.763	11.57	**2.6**
DA - D.2	1.00	0.624	8.34	**5.2**	0.704	10.57	**7.4**
DA - D.3	1.92	0.477	5.61	**5.1**	0.553	7.31	**7.8**
DA - D.4	1.13	0.530	5.73	**3.4**	0.607	7.46	**5.1**
DA - D.5	0.95	0.665	8.61	**5.4**	0.748	10.88	**7.7**
DA - D.0	0.95	0.619	6.09	**3.6**	0.699	7.91	**5.3**
DA - E.1.0	0.71	0.667	8.66	**4.1**	0.749	10.93	**5.8**
DA - E.1.1	1.11	0.633	8.01	**5.6**	0.714	10.19	**8.1**
DA - E.0.0	0.31	0.803	8.24	**2.1**	0.890	10.46	**2.9**
DA - E.0.1	0.38	0.664	9.00	**2.3**	0.747	11.31	**3.2**
DA - F.1	0.98	0.574	7.98	**4.5**	0.652	10.15	**6.5**
DA - F.2	0.72	0.697	8.91	**4.5**	0.781	11.21	**6.3**
DA - F.3	0.79	0.585	7.93	**3.7**	0.665	10.09	**5.3**

Post-Development TOC

Drainage Area	Total Area, acres	Time of Conc'n, Tc (min)
DA - A.1	0.70	10.38
DA - A.2	0.98	10.08
DA - A.3	0.93	8.10
DA - A.4	0.27	5.00
DA - A.0	0.63	7.08
DA - B.2.0	0.26	7.30
DA - B.2.1	0.71	8.77
DA - B.1.0	0.18	5.00
DA - B.1.1	0.49	9.30
DA - B.3	0.66	8.16
DA - B.4	0.95	8.98
DA - B.5	0.61	7.95
DA - B.0	0.95	6.78
DA - C.1	0.84	10.43
DA - C.2	1.06	9.89
DA - C.3	0.41	7.20
DA - C.0	1.18	12.72
DA - D.1	0.29	7.00
DA - D.2	1.00	9.51
DA - D.3	1.92	23.35
DA - D.4	1.13	22.39
DA - D.5	0.95	8.68
DA - D.0	0.95	19.83
DA - E.1.0	0.71	8.55
DA - E.1.1	1.11	10.61
DA - E.0.0	0.31	9.83
DA - E.0.1	0.38	7.61
DA - F.1	0.98	10.73
DA - F.2	0.72	7.84
DA - F.3	0.79	10.92

REV	DATE	APR	DESCRIPTION

DESIGNED BY: DAZ
REVIEWED BY: TMH
DRAWN BY: DAZ

BGE, INC.
1701 DIRECTORS BOULEVARD, SUITE 1000
AUSTIN, TX 78744
TBPE Registration No. F-1046
TEL: 512-879-0400 www.bgeinc.com

COTTONWOOD CREEK, PHASE II
HUTTO, TEXAS

DRAINAGE CALCULATIONS

SUBMITTAL DATE: 03-15-2021

STATE OF TEXAS
TIMOTHY M. HOLLAND
94848
LICENSED PROFESSIONAL ENGINEER
01/08/2021

SHEET
15 OF 54

Record Drawing

G:\TXC\Projects\Lennar\8390-00-Cottonwood_Ph2\LD\01_CADD\01_Sheis\C-SP-DAM-OVAL-PH-2.dwg Layout: DRAINAGE CALCULATIONS Plotted: 7/7/2021 4:32:51 PM

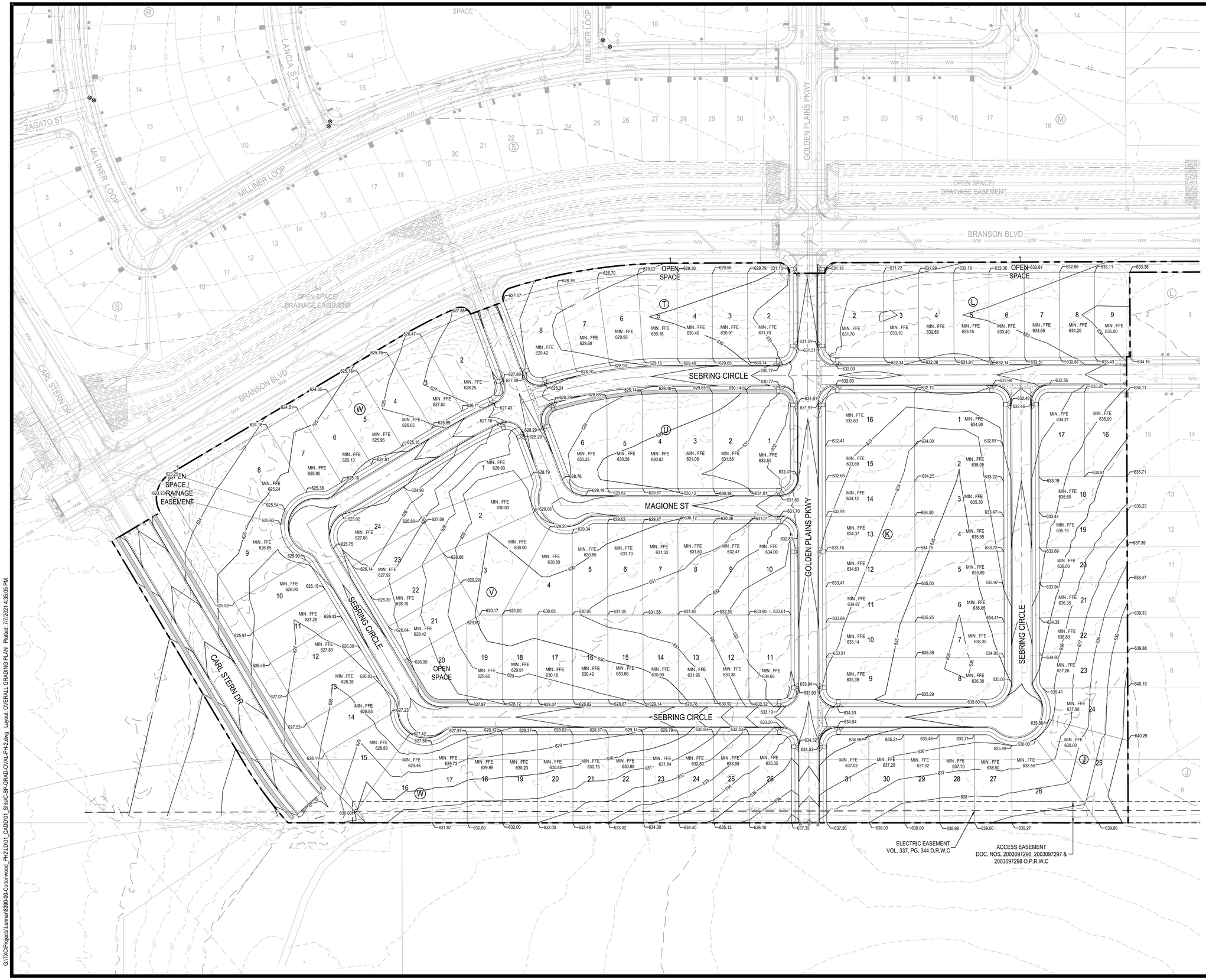

0 30' 60' 120'
SCALE: 1" = 60'

LEGEND

- PROPERTY BOUNDARY
- EXISTING MAJOR CONTOUR
- EXISTING MINOR CONTOUR
- PROPOSED MAJOR CONTOUR
- PROPOSED MINOR CONTOUR

1. ALL ACCESSIBLE ROUTES SHALL BE INSPECTED AND CERTIFIED BY A TDLR REGISTERED ACCESSIBILITY SPECIALIST (RAS).
2. FINISH FLOOR ELEVATIONS DEPICTED ARE MINIMUM RECOMMENDATIONS BASED ON CODE REQUIREMENTS. HOMEBUILDER TO PROVIDE ACTUAL FINISHED FLOOR ELEVATIONS PER THEIR SPECIFICATIONS.

REV	DESCRIPTION	DATE	APR

DESIGNED BY: DAZ
REVIEWED BY: TMH
DRAWN BY: DAZ

BGE
BGE, INC.
1701 DIRECTORS BOULEVARD, SUITE 1000
AUSTIN, TX 78744
TBPE Registration No. F-1046
TEL: 512-879-0400 www.bgeinc.com

COTTONWOOD CREEK, PHASE II
HUTTO, TEXAS

OVERALL GRADING PLAN

SUBMITTAL DATE: 03-15-2021

STATE OF TEXAS
TIMOTHY M. HOLLAND
94848
LICENSED
PROFESSIONAL ENGINEER
01/08/2021

SHEET
16 OF 54

Record Drawing

G:\TX\CI\Projects\Lennar\8390-00-Cottonwood_PH2\LD\01_CADD\01_Site\C-SP-GRAD-OVAL-PH-2.dwg Layout: OVERALL GRADING PLAN Plotted: 7/7/2021 4:35:05 PM

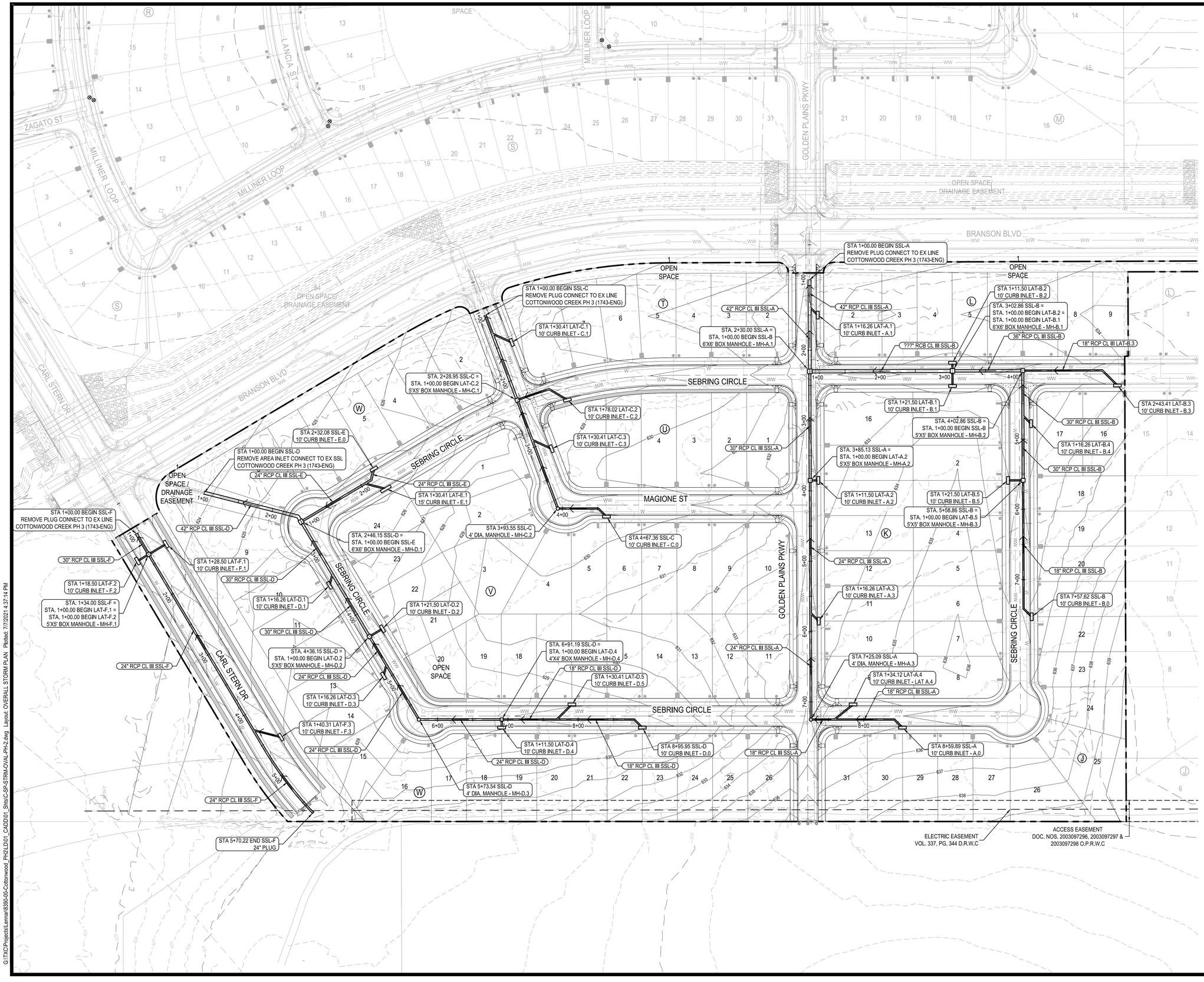

0 30' 60' 120'
SCALE: 1" = 60'

LEGEND

- PROPERTY BOUNDARY
- EXISTING MAJOR CONTOUR
- EXISTING MINOR CONTOUR
- PROPOSED MAJOR CONTOUR
- PROPOSED MINOR CONTOUR
- STORM SEWER FLOW DIRECTION
- PROPOSED MANHOLE
- 10' CURB INLET

NOTES:
1. ALL INLET WYE CONNECTIONS TO BE 45 DEGREES UNLESS OTHERWISE NOTED.
2. CONTRACTOR TO BE AWARE OF OVERHEAD ELECTRIC LINES AT ALL TIMES.

REV	DESCRIPTION	DATE	APR

DESIGNED BY: DAZ
REVIEWED BY: TMH
DRAWN BY: DAZ

BGE, INC.
1701 DIRECTORS BOULEVARD, SUITE 1000
AUSTIN, TX 78744
TBPE Registration No. F-1046
TEL 512-879-0400 www.brownsgay.com

COTTONWOOD CREEK, PHASE II
HUTTO, TEXAS

OVERALL STORM PLAN

SUBMITTAL DATE: 03-15-2021

STATE OF TEXAS
TIMOTHY M. HOLLAND
94848
LICENSED
PROFESSIONAL ENGINEER
07/08/2021

SHEET
17 OF 54

Record Drawing

G:\TXCI\Projects\Lennar\8390-00-Cottonwood_PH2\LD\01_CADD\01_Shts\C-SP-STRM-OVAL-PH-2.dwg Layout: OVERALL STORM PLAN Plotted: 7/7/2021 4:37:14 PM

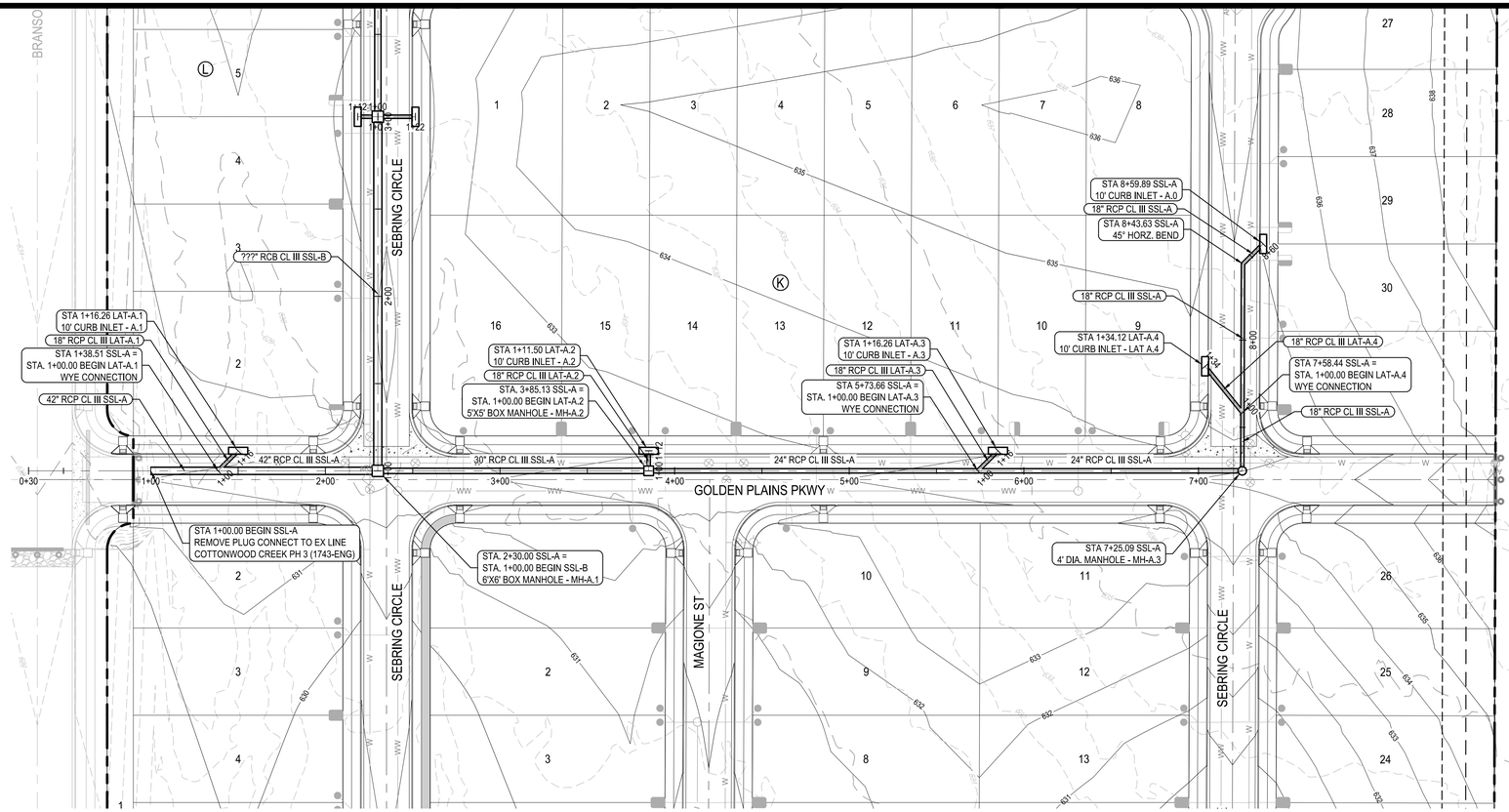

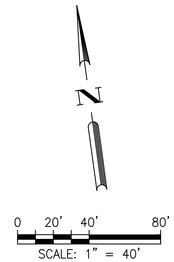

LEGEND

- PROPERTY BOUNDARY
- EXISTING MAJOR CONTOUR
- EXISTING MINOR CONTOUR
- PROPOSED MAJOR CONTOUR
- PROPOSED MINOR CONTOUR
- STORM SEWER FLOW DIRECTION
- PROPOSED MANHOLE
- PROPOSED 10' CURB INLET
- PROPOSED 4'X4' AREA INLET

NOTES:
1. ALL INLET WYE CONNECTIONS TO BE 45 DEGREES UNLESS OTHERWISE NOTED.

SSL-A

Q_{25} (CFS)	46.60
V_{25} (FPS)	4.84
D_{25} (FT)	FULL
Q_{100} (CFS)	64.04
V_{100} (FPS)	6.66
D_{100} (FT)	FULL

Q_{25} (CFS)	16.00
V_{25} (FPS)	3.26
D_{25} (FT)	FULL
Q_{100} (CFS)	20.24
V_{100} (FPS)	4.12
D_{100} (FT)	FULL

Q_{25} (CFS)	10.90
V_{25} (FPS)	5.48
D_{25} (FT)	FULL
Q_{100} (CFS)	14.12
V_{100} (FPS)	4.49
D_{100} (FT)	FULL

Q_{25} (CFS)	5.70
V_{25} (FPS)	4.66
D_{25} (FT)	1.78
Q_{100} (CFS)	8.00
V_{100} (FPS)	2.55
D_{100} (FT)	FULL

Q_{25} (CFS)	5.70
V_{25} (FPS)	6.43
D_{25} (FT)	0.77
Q_{100} (CFS)	8.00
V_{100} (FPS)	4.53
D_{100} (FT)	FULL

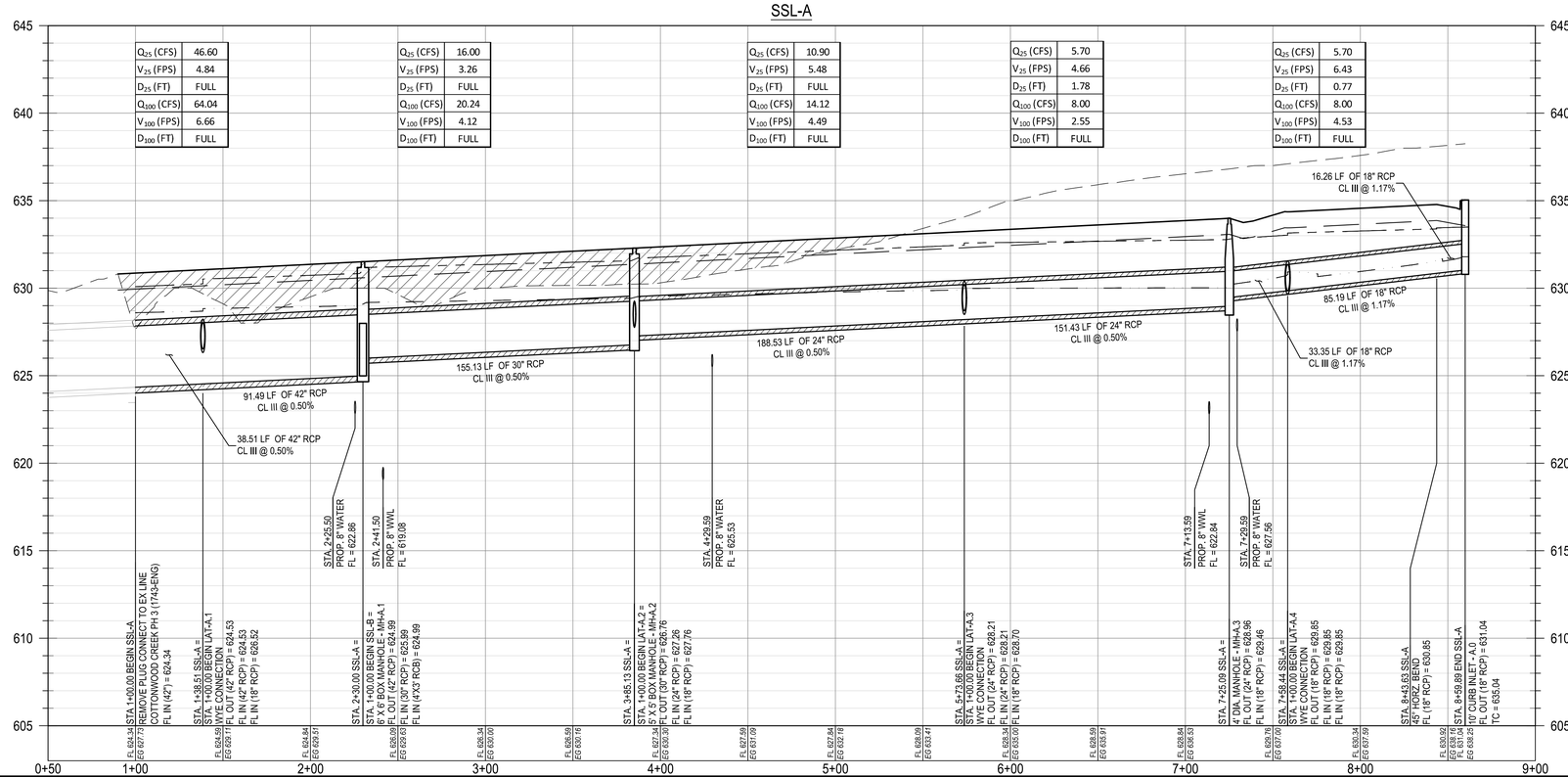

PROFILE LEGEND

- PROPOSED GRADE
- PROPOSED SUBGRADE
- EXISTING GRADE
- 100 YEAR HGL LINE
- 25 YEAR HGL LINE
- PROPOSED STORM LINE
- PROPOSED STORM CURB INLET
- PROPOSED STORM MANHOLE
- PROPOSED STORM BOX MANHOLE

REV	DESCRIPTION	DATE	APR

DESIGNED BY: DAZ
REVIEWED BY: TMH
DRAWN BY: DAZ

BGE, INC.
1701 DIRECTORS BOULEVARD, SUITE 1000
AUSTIN, TX 78744
TBPE Registration No. F-1046
TEL: 512-879-0400 www.bgeinc.com

COTTONWOOD CREEK, PHASE II
HUTTO, TEXAS

SSL-A PLAN AND PROFILE (1+00 TO END)

SUBMITTAL DATE: 03-15-2021

STATE OF TEXAS
TIMOTHY M. HOLLAND
94848
LICENSED
PROFESSIONAL ENGINEER
03/08/2021

SHEET
18 OF 54

Record Drawing

G:\TXC\Projects\Lennar\8390-00-Cottonwood_PH2\LD\01_CADD\01_Shts\C-SP-STRM-P&P-PH-2.dwg Layout: SSL-A PLAN AND PROFILE (1+00 TO END) Plotted: 7/7/2021 4:39:16 PM

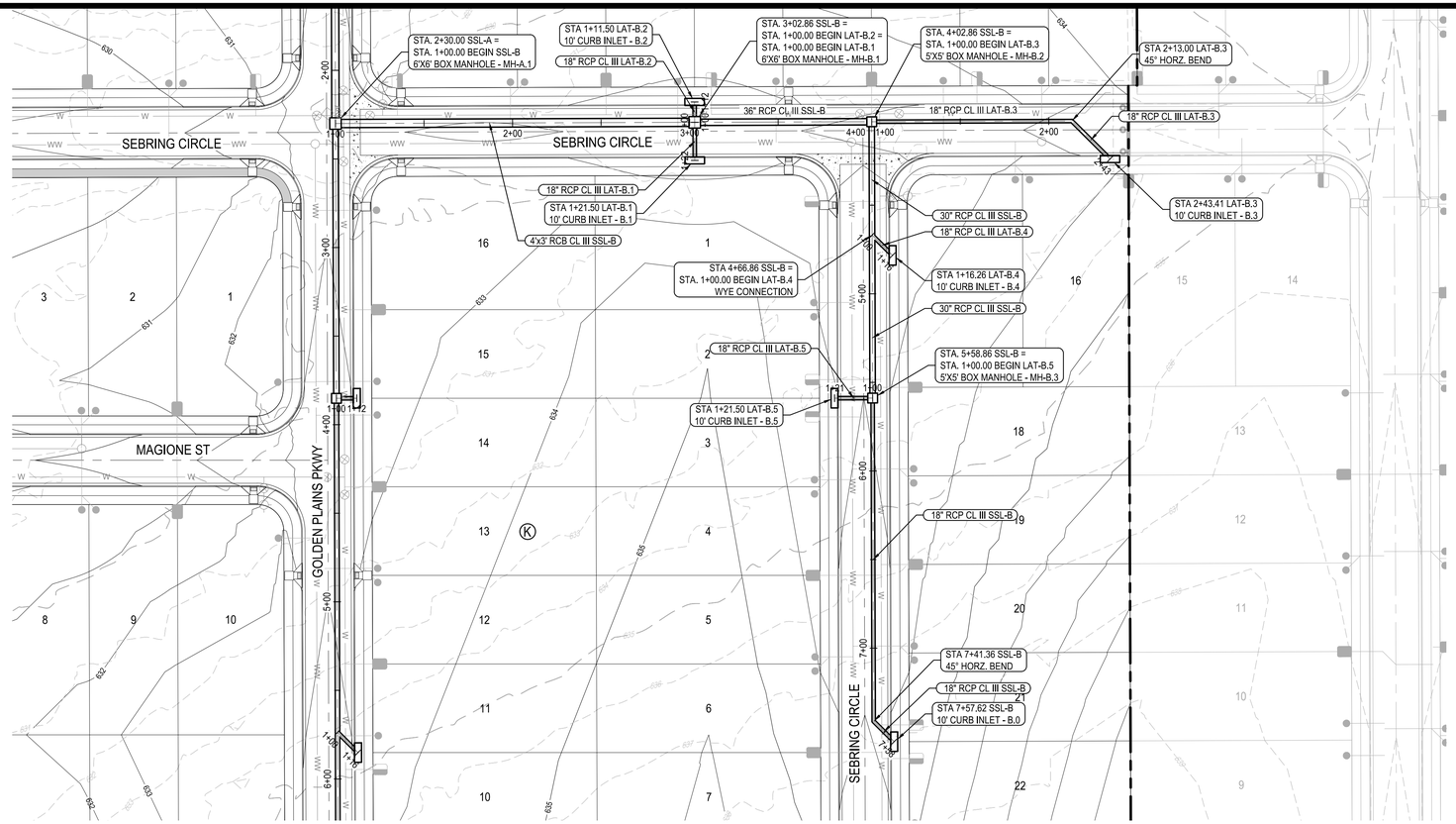

0 20' 40' 80'
SCALE: 1" = 40'

LEGEND

- PROPERTY BOUNDARY
- EXISTING MAJOR CONTOUR
- EXISTING MINOR CONTOUR
- PROPOSED MAJOR CONTOUR
- PROPOSED MINOR CONTOUR
- STORM SEWER FLOW DIRECTION
- PROPOSED MANHOLE
- PROPOSED 10' CURB INLET
- PROPOSED 4'X4' AREA INLET

NOTES:
1. ALL INLET WYE CONNECTIONS TO BE 45 DEGREES UNLESS OTHERWISE NOTED.

SSL-B

Q_{25} (CFS)	27.10
V_{25} (FPS)	6.89
D_{25} (FT)	FULL
Q_{100} (CFS)	38.70
V_{100} (FPS)	4.02
D_{100} (FT)	FULL

Q_{25} (CFS)	17.70
V_{25} (FPS)	6.20
D_{25} (FT)	FULL
Q_{100} (CFS)	23.82
V_{100} (FPS)	3.37
D_{100} (FT)	FULL

Q_{25} (CFS)	14.30
V_{25} (FPS)	2.91
D_{25} (FT)	FULL
Q_{100} (CFS)	18.92
V_{100} (FPS)	3.85
D_{100} (FT)	FULL

Q_{25} (CFS)	9.00
V_{25} (FPS)	5.21
D_{25} (FT)	FULL
Q_{100} (CFS)	12.80
V_{100} (FPS)	2.61
D_{100} (FT)	FULL

Q_{25} (CFS)	5.40
V_{25} (FPS)	5.88
D_{25} (FT)	1.45
Q_{100} (CFS)	7.70
V_{100} (FPS)	4.36
D_{100} (FT)	FULL

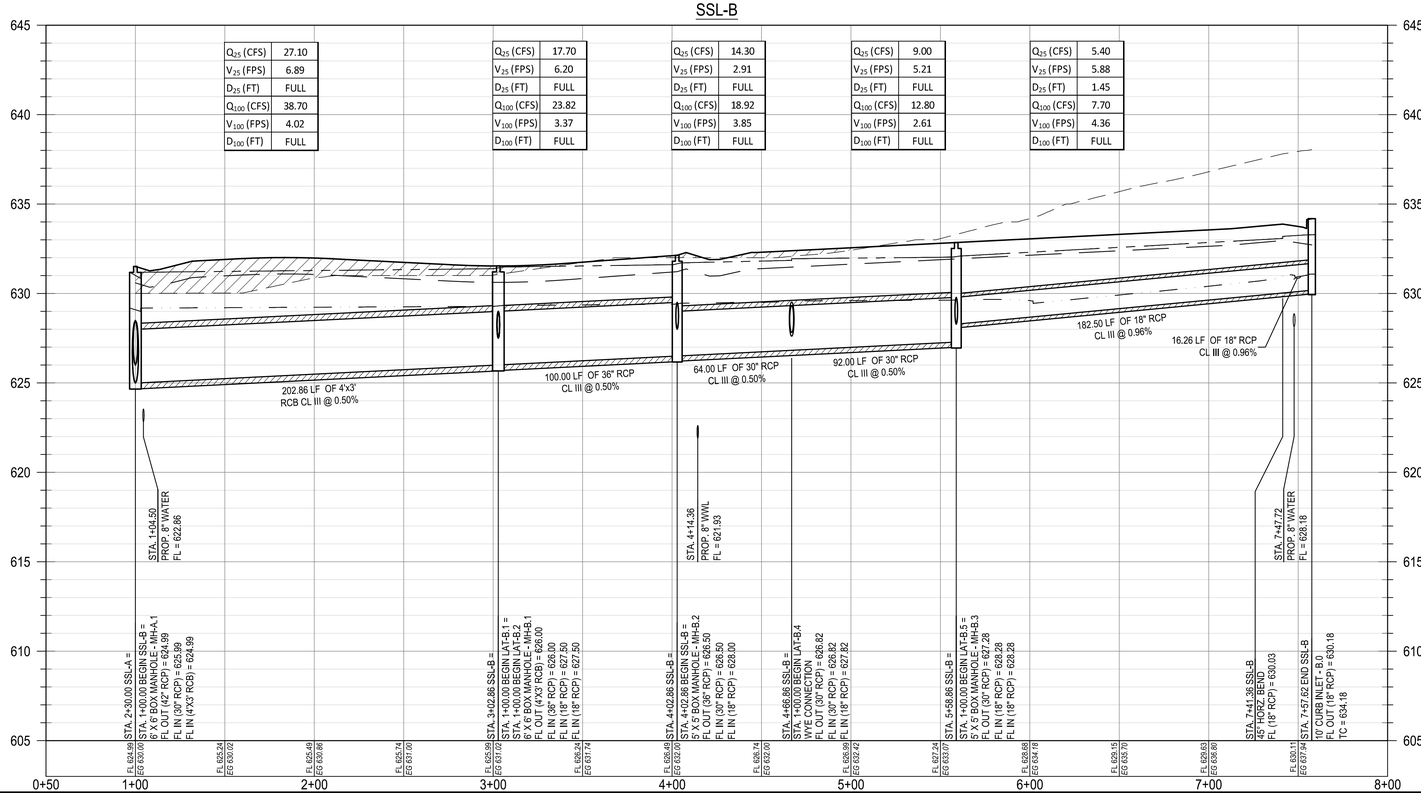

PROFILE LEGEND

- PROPOSED GRADE
- PROPOSED SUBGRADE
- EXISTING GRADE
- 100 YEAR HGL LINE
- 25 YEAR HGL LINE
- PROPOSED STORM LINE
- PROPOSED STORM CURB INLET
- PROPOSED STORM MANHOLE
- PROPOSED STORM BOX MANHOLE

REV	DESCRIPTION	DATE	APR

DESIGNED BY: DAZ
REVIEWED BY: TMH
DRAWN BY: DAZ

BGE, INC.
1701 DIRECTORS BOULEVARD, SUITE 1000
AUSTIN, TX 78744
TBPE Registration No. F-1046
TEL: 512-879-0400 www.bgeinc.com

COTTONWOOD CREEK, PHASE II
HUTTO, TEXAS

SSL-B PLAN AND PROFILE (1+00 TO END)

SUBMITTAL DATE: 03-15-2021

STATE OF TEXAS
TIMOTHY M. HOLLAND
94848
LICENSED
PROFESSIONAL ENGINEER
03/08/2021

SHEET
19 OF 54

Record Drawing

G:\TXC\Projects\Lennar\8390-00-Cottonwood_PH2\LD\01_CADD\01_Shts\C-SP-STRM-P&P-PH-2.dwg Layout: SSL-B PLAN AND PROFILE (1+00 TO END) Plotted: 7/7/2021 4:39:30 PM

Curve Table: Alignments					
CURVE	DELTA ANGLE	RADIUS	ARC LENGTH	CHORD DIRECTION	CHORD DISTANCE
C1	4°33'33"	605.00'	48.14'	N10° 47' 33.15"W	48.13'

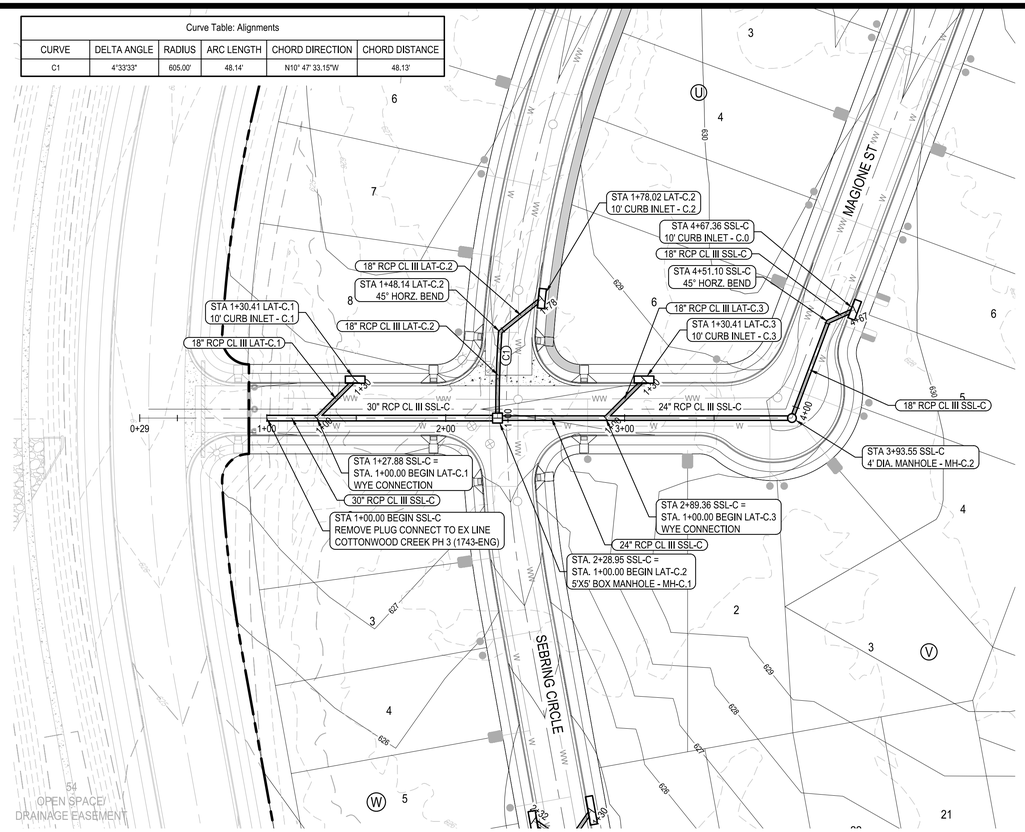

N

0 20' 40' 80'
SCALE: 1" = 40'

LEGEND

- PROPERTY BOUNDARY
- EXISTING MAJOR CONTOUR
- EXISTING MINOR CONTOUR
- PROPOSED MAJOR CONTOUR
- PROPOSED MINOR CONTOUR
- STORM SEWER FLOW DIRECTION
- PROPOSED MANHOLE
- PROPOSED 10' CURB INLET
- PROPOSED 4'X4' AREA INLET

NOTES:
1. ALL INLET WYE CONNECTIONS TO BE 45 DEGREES UNLESS OTHERWISE NOTED.

SSL-C

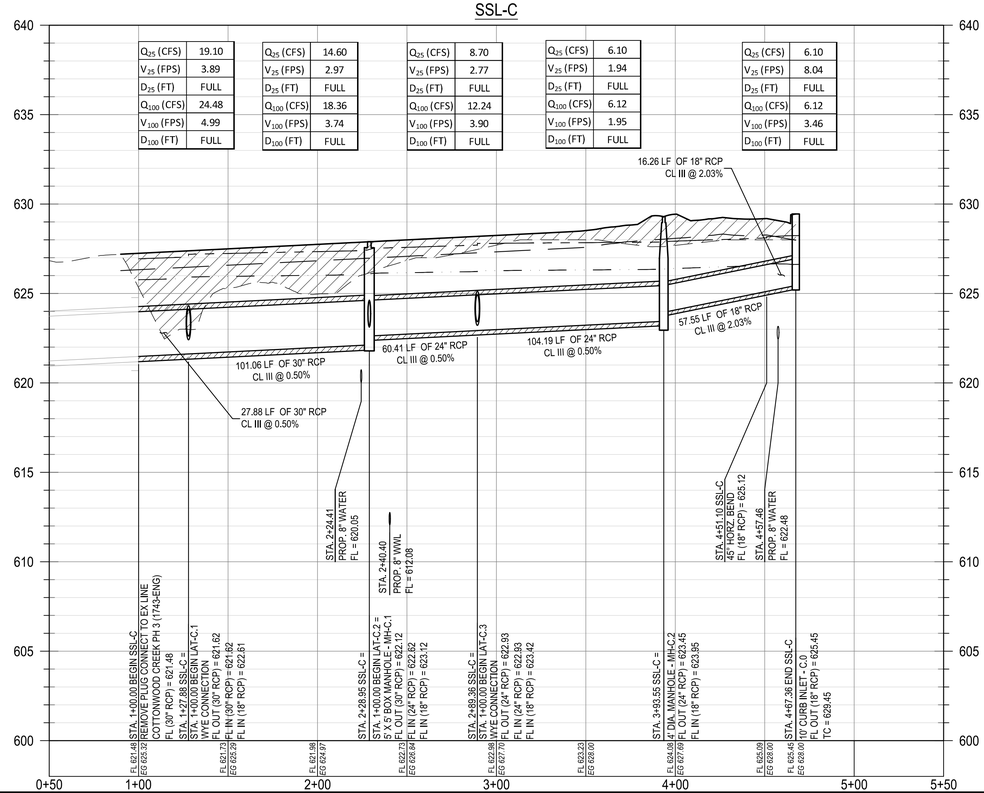

Q_{25} (CFS)	19.10	14.60	8.70	6.10	6.10
V_{25} (FPS)	3.89	2.97	2.77	1.94	8.04
D_{25} (FT)	FULL	FULL	FULL	FULL	FULL
Q_{100} (CFS)	24.48	18.36	12.24	6.12	6.12
V_{100} (FPS)	4.99	3.74	3.90	1.95	3.46
D_{100} (FT)	FULL	FULL	FULL	FULL	FULL

PROFILE LEGEND

- PROPOSED GRADE
- PROPOSED SUBGRADE
- EXISTING GRADE
- 100 YEAR HGL LINE
- 25 YEAR HGL LINE
- PROPOSED STORM LINE
- PROPOSED STORM CURB INLET
- PROPOSED STORM MANHOLE
- PROPOSED STORM BOX MANHOLE

REV	DESCRIPTION	DATE	APR

DESIGNED BY: DAZ
REVIEWED BY: TMH
DRAWN BY: DAZ

BGE, INC.
1701 DIRECTORS BOULEVARD, SUITE 1000
AUSTIN, TX 78744
TBPE Registration No. F-1046
TEL: 512-879-0400 www.browngay.com

COTTONWOOD CREEK, PHASE II
HUTTO, TEXAS

SSL-C PLAN AND PROFILE (1+00 TO END)

SUBMITTAL DATE: 03-15-2021

STATE OF TEXAS
TIMOTHY M. HOLLAND
94848
LICENSED
PROFESSIONAL ENGINEER
03/08/2021

SHEET
20 OF 54

Record Drawing

G:\TXC\Projects\Lennar\8390-00-Cottonwood_PH2\LD\01_CADD\01_Shts\C-SP-STRM-P&P-PH-2.dwg Layout: SSL-C PLAN AND PROFILE (1+00 TO END) Plotted: 7/7/2021 4:39:50 PM

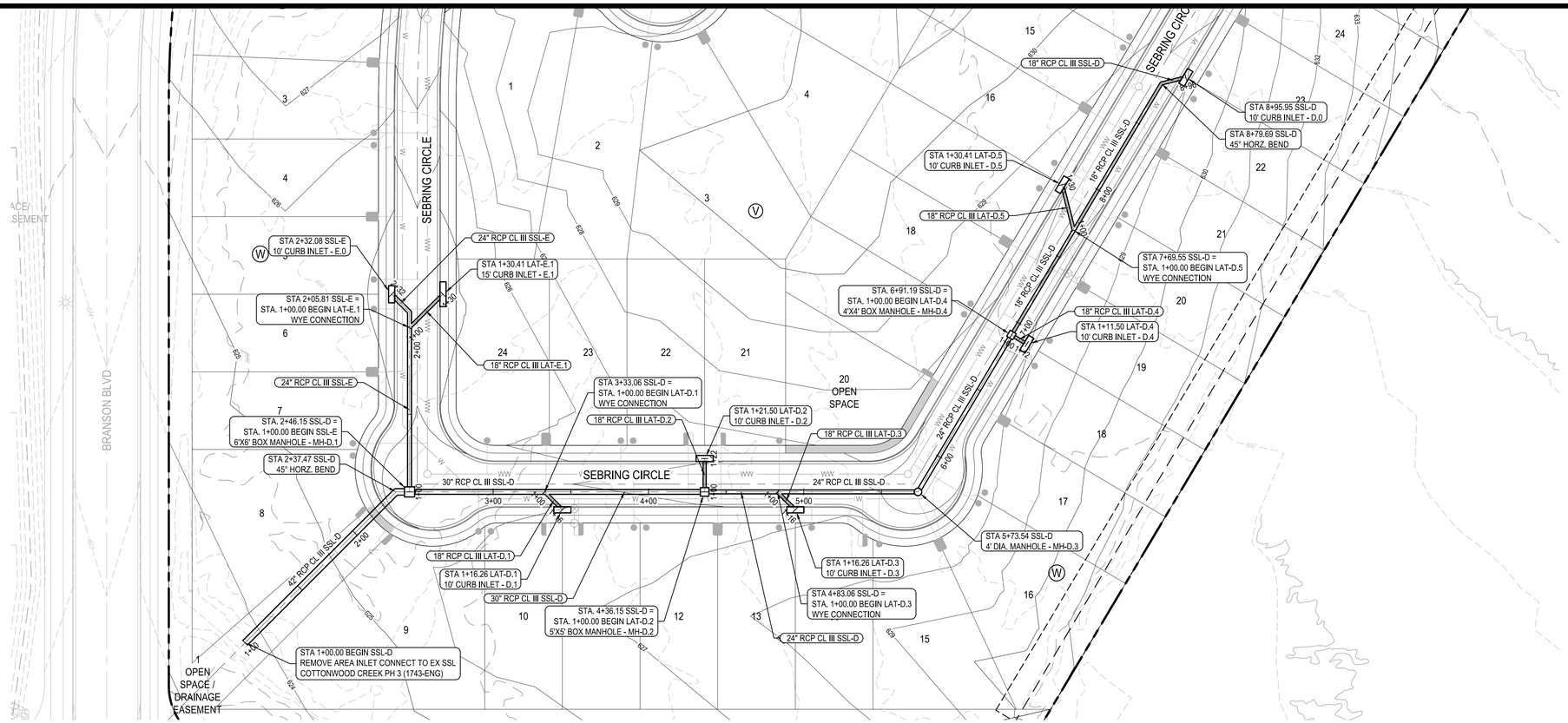

LEGEND

- PROPERTY BOUNDARY
- EXISTING MAJOR CONTOUR
- EXISTING MINOR CONTOUR
- PROPOSED MAJOR CONTOUR
- PROPOSED MINOR CONTOUR
- STORM SEWER FLOW DIRECTION
- PROPOSED MANHOLE
- PROPOSED 10' CURB INLET
- PROPOSED 4'X4' AREA INLET

NOTES:
1. ALL INLET WYE CONNECTIONS TO BE 45 DEGREES UNLESS OTHERWISE NOTED.

SSL-D

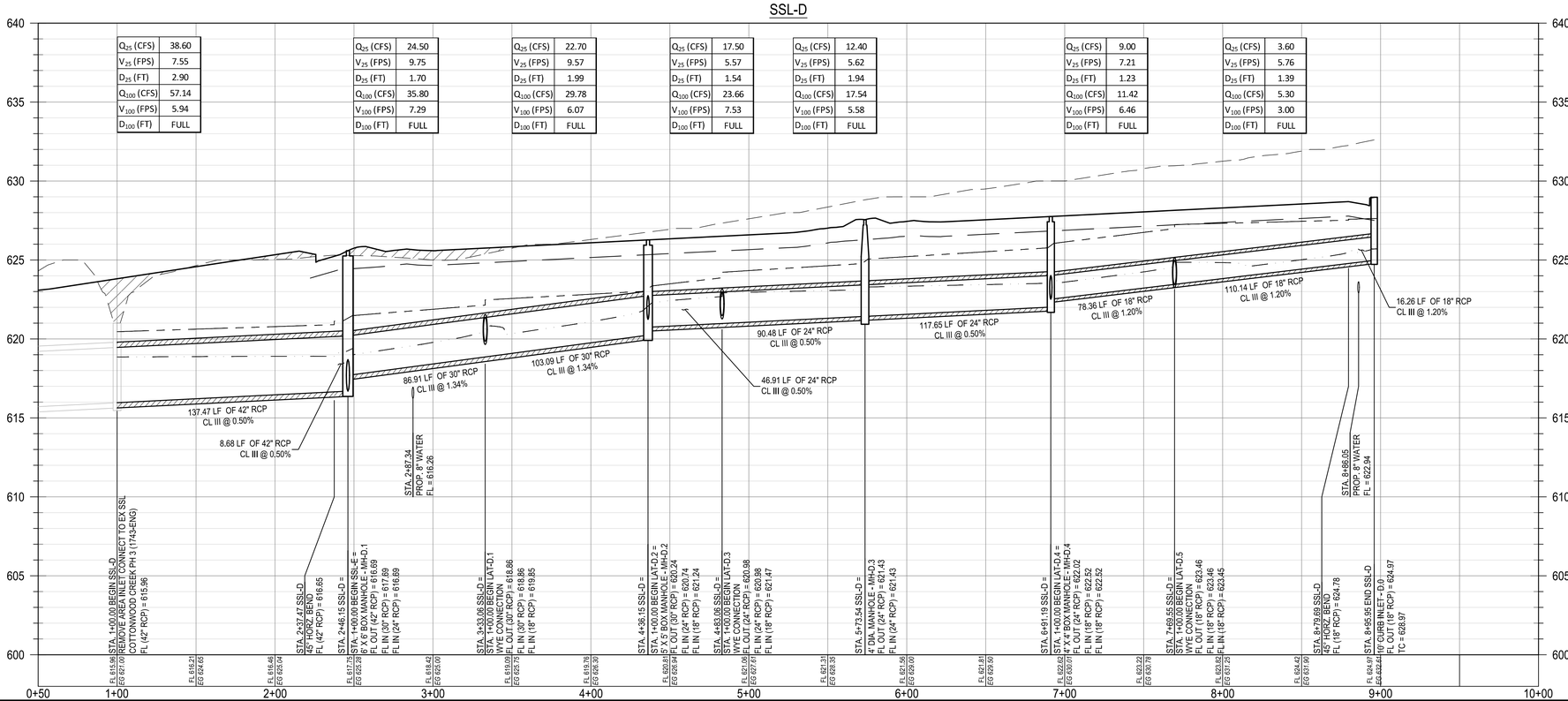

Q_{25} (CFS)	38.60
V_{25} (FPS)	7.55
D_{25} (FT)	2.90
Q_{100} (CFS)	57.14
V_{100} (FPS)	5.94
D_{100} (FT)	FULL

Q_{25} (CFS)	24.50
V_{25} (FPS)	9.75
D_{25} (FT)	1.70
Q_{100} (CFS)	35.80
V_{100} (FPS)	7.29
D_{100} (FT)	FULL

Q_{25} (CFS)	22.70
V_{25} (FPS)	9.57
D_{25} (FT)	1.99
Q_{100} (CFS)	29.78
V_{100} (FPS)	6.07
D_{100} (FT)	FULL

Q_{25} (CFS)	17.50
V_{25} (FPS)	5.57
D_{25} (FT)	1.54
Q_{100} (CFS)	23.66
V_{100} (FPS)	7.53
D_{100} (FT)	FULL

Q_{25} (CFS)	12.40
V_{25} (FPS)	5.62
D_{25} (FT)	1.94
Q_{100} (CFS)	17.54
V_{100} (FPS)	5.58
D_{100} (FT)	FULL

Q_{25} (CFS)	9.00
V_{25} (FPS)	7.21
D_{25} (FT)	1.23
Q_{100} (CFS)	11.42
V_{100} (FPS)	6.46
D_{100} (FT)	FULL

Q_{25} (CFS)	3.60
V_{25} (FPS)	5.76
D_{25} (FT)	1.39
Q_{100} (CFS)	5.30
V_{100} (FPS)	3.00
D_{100} (FT)	FULL

PROFILE LEGEND

- PROPOSED GRADE
- PROPOSED SUBGRADE
- EXISTING GRADE
- 100 YEAR HGL LINE
- 25 YEAR HGL LINE
- PROPOSED STORM LINE
- PROPOSED STORM CURB INLET
- PROPOSED STORM MANHOLE
- PROPOSED STORM BOX MANHOLE

REV	DESCRIPTION	DATE	APR

DESIGNED BY: DAZ
REVIEWED BY: TMH
DRAWN BY: DAZ

BGE, INC.
1701 DIRECTORS BOULEVARD, SUITE 1000
AUSTIN, TX 78744
TBPE Registration No. F-1046
TEL: 512-879-0400 www.bgeinc.com

COTTONWOOD CREEK, PHASE II
HUTTO, TEXAS
SSL-D PLAN AND PROFILE (1+00 TO END)

SUBMITTAL DATE: 03-15-2021

STATE OF TEXAS
TIMOTHY M. HOLLAND
94848
LICENSED
PROFESSIONAL ENGINEER
03/08/2021

SHEET 21 OF 54

Record Drawing

G:\TXC\Projects\Lennar\8390-00-Cottonwood_PH2\LD\01_CADD\01_Shts\C-SP-STRM-P&P-PH-2.dwg Layout: SSL-D PLAN AND PROFILE (1+00 TO END) Plotted: 7/7/2021 4:40:06 PM

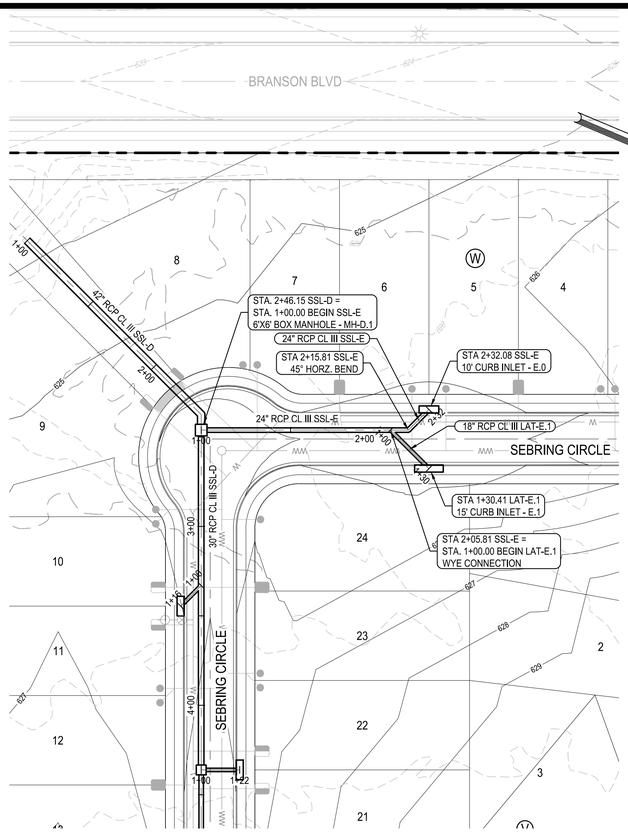

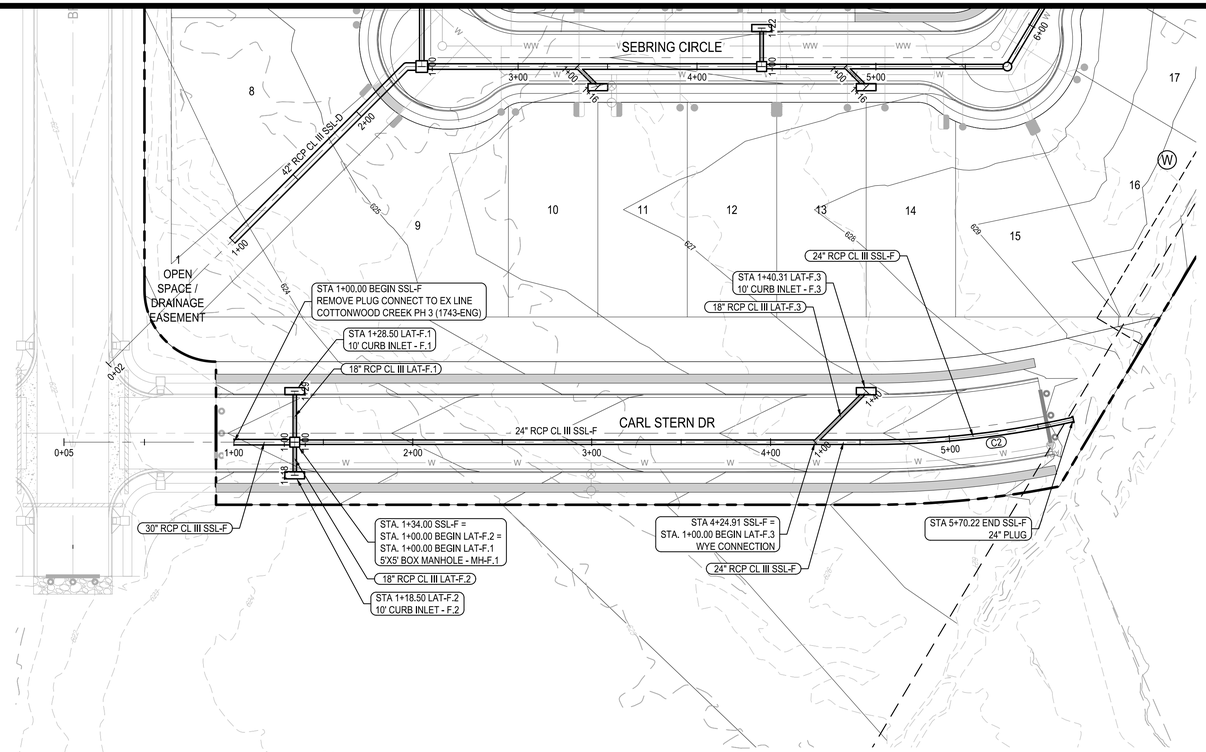

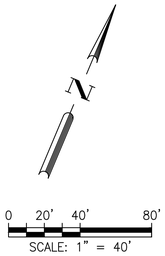

LEGEND

- PROPERTY BOUNDARY
- EXISTING MAJOR CONTOUR
- EXISTING MINOR CONTOUR
- PROPOSED MAJOR CONTOUR
- PROPOSED MINOR CONTOUR
- STORM SEWER FLOW DIRECTION
- PROPOSED MANHOLE
- PROPOSED 10' CURB INLET
- PROPOSED 4'X4' AREA INLET

NOTES:
1. ALL INLET WYE CONNECTIONS TO BE 45 DEGREES UNLESS OTHERWISE NOTED.

Curve Table: Alignments					
CURVE	DELTA ANGLE	RADIUS	ARC LENGTH	CHORD DIRECTION	CHORD DISTANCE
C2	12°53'35"	505.00'	113.64'	N60° 44' 00.41"E	113.40'

SSL-E

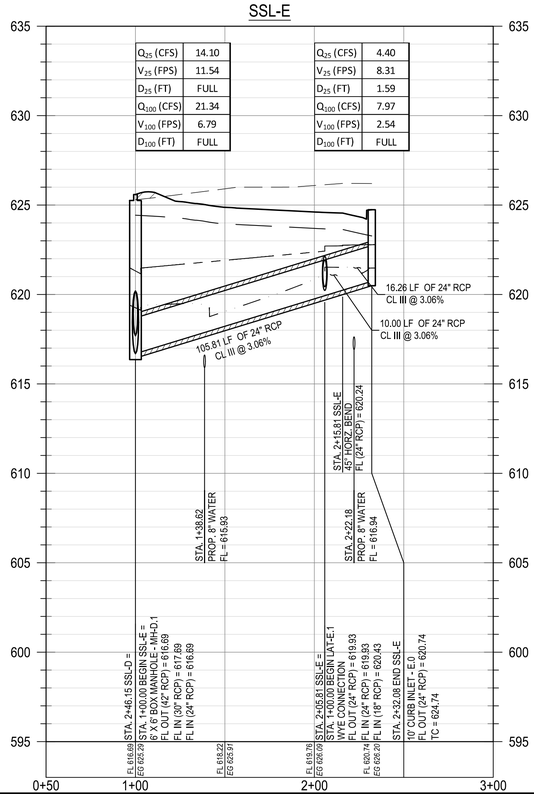

SSL-F

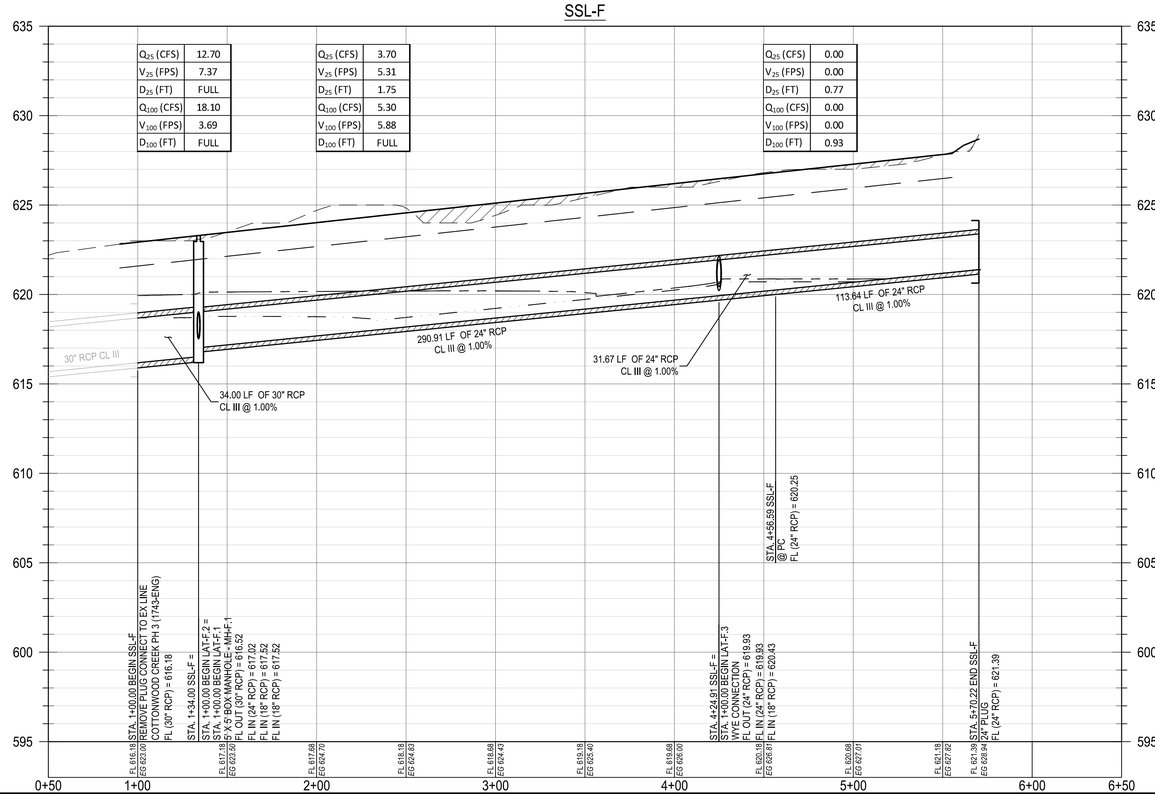

PROFILE LEGEND

- PROPOSED GRADE
- PROPOSED SUBGRADE
- EXISTING GRADE
- 100 YEAR HGL LINE
- 25 YEAR HGL LINE
- PROPOSED STORM LINE
- PROPOSED STORM CURB INLET
- PROPOSED STORM MANHOLE
- PROPOSED STORM BOX MANHOLE

REV	DESCRIPTION	DATE	APR

DESIGNED BY: DAZ
REVIEWED BY: TMH
DRAWN BY: DAZ

BGE, INC.
1701 DIRECTORS BOULEVARD, SUITE 1000
AUSTIN, TX 78744
TBPE Registration No. F-1046
TEL: 512-879-0400 www.bgeinc.com

COTTONWOOD CREEK, PHASE II
HUTTO, TEXAS

SSL-E & SSL-F PLAN AND PROFILE (1+00 TO END)

SUBMITTAL DATE: 03-15-2021

STATE OF TEXAS
TIMOTHY M. HOLLAND
94848
LICENSED
PROFESSIONAL ENGINEER
03/08/2021

SHEET 22 OF 54

Record Drawing

G:\TXC\Projects\Lennar\8390-00-Cottonwood_PH2\LD\01_CADD\01_Shts\C-SP-STRM-P&P-PH-2.dwg Layout: SSL-E & SSL-F PLAN AND PROFILE (1+00 TO END) Plotted: 7/7/2021 4:40:38 PM

LAT-A.1

Q_{25} (CFS)	3.50
V_{25} (FPS)	1.98
D_{25} (FT)	FULL
Q_{100} (CFS)	5.10
V_{100} (FPS)	2.89
D_{100} (FT)	FULL

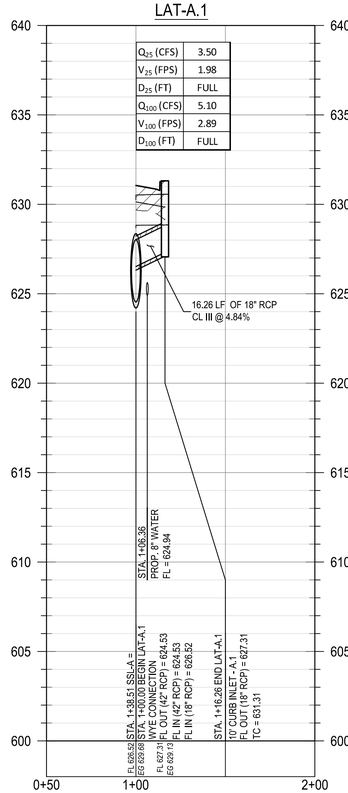

LAT-A.2

Q_{25} (CFS)	5.10
V_{25} (FPS)	11.52
D_{25} (FT)	FULL
Q_{100} (CFS)	6.12
V_{100} (FPS)	3.46
D_{100} (FT)	FULL

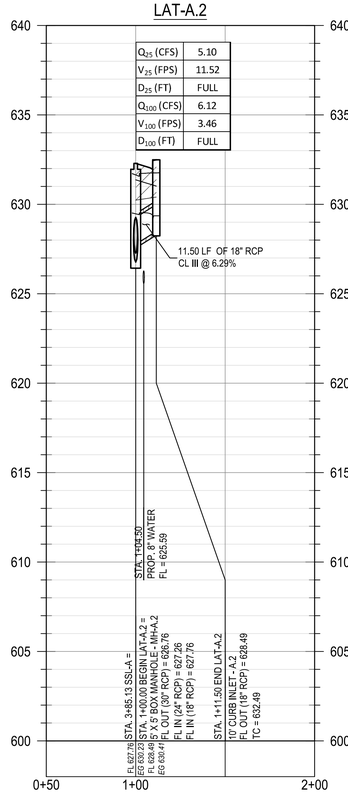

LAT-A.3

Q_{25} (CFS)	5.20
V_{25} (FPS)	10.54
D_{25} (FT)	1.28
Q_{100} (CFS)	6.12
V_{100} (FPS)	3.46
D_{100} (FT)	FULL

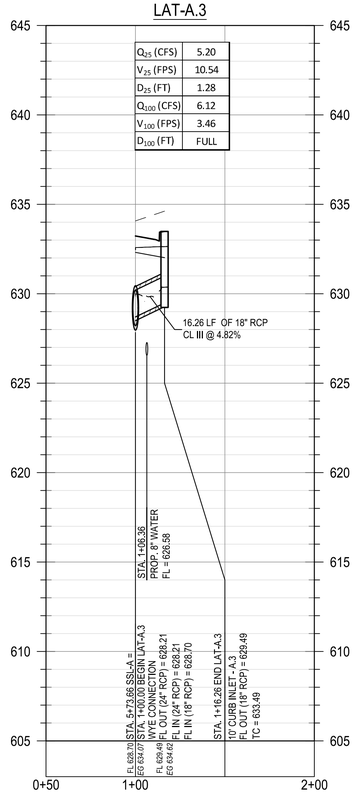

LAT-A.4

Q_{25} (CFS)	1.80
V_{25} (FPS)	6.30
D_{25} (FT)	1.08
Q_{100} (CFS)	2.50
V_{100} (FPS)	1.41
D_{100} (FT)	FULL

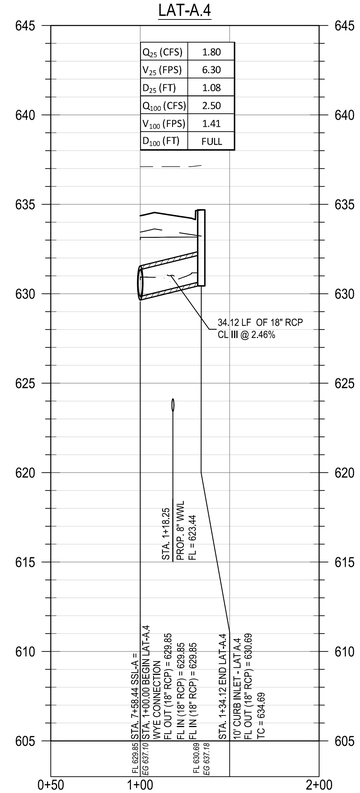

LAT-B.1

Q_{25} (CFS)	3.80
V_{25} (FPS)	2.15
D_{25} (FT)	FULL
Q_{100} (CFS)	6.78
V_{100} (FPS)	3.84
D_{100} (FT)	FULL

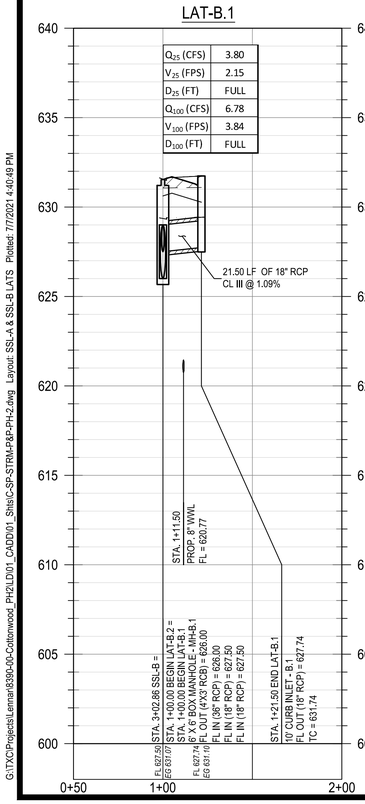

LAT-B.2

Q_{25} (CFS)	5.60
V_{25} (FPS)	3.17
D_{25} (FT)	FULL
Q_{100} (CFS)	8.10
V_{100} (FPS)	4.58
D_{100} (FT)	FULL

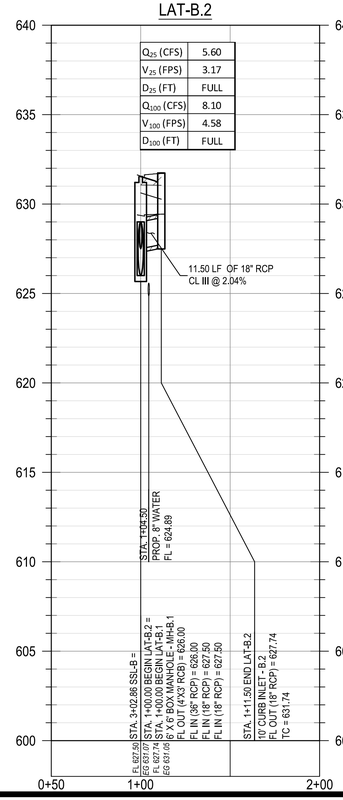

LAT-B.3

Q_{25} (CFS)	3.40
V_{25} (FPS)	5.53
D_{25} (FT)	FULL
Q_{100} (CFS)	4.90
V_{100} (FPS)	2.77
D_{100} (FT)	FULL

Q_{25} (CFS)	3.40
V_{25} (FPS)	5.53
D_{25} (FT)	0.81
Q_{100} (CFS)	4.90
V_{100} (FPS)	2.77
D_{100} (FT)	FULL

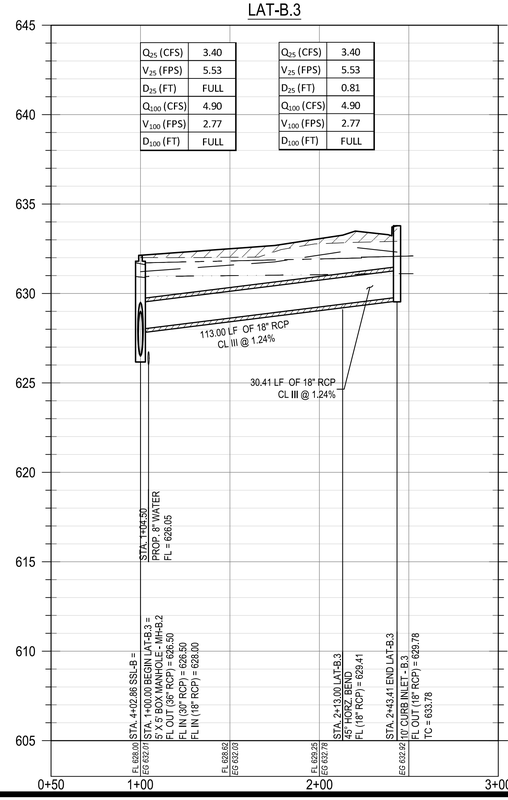

LAT-B.4

Q_{25} (CFS)	5.30
V_{25} (FPS)	10.81
D_{25} (FT)	FULL
Q_{100} (CFS)	6.12
V_{100} (FPS)	3.46
D_{100} (FT)	FULL

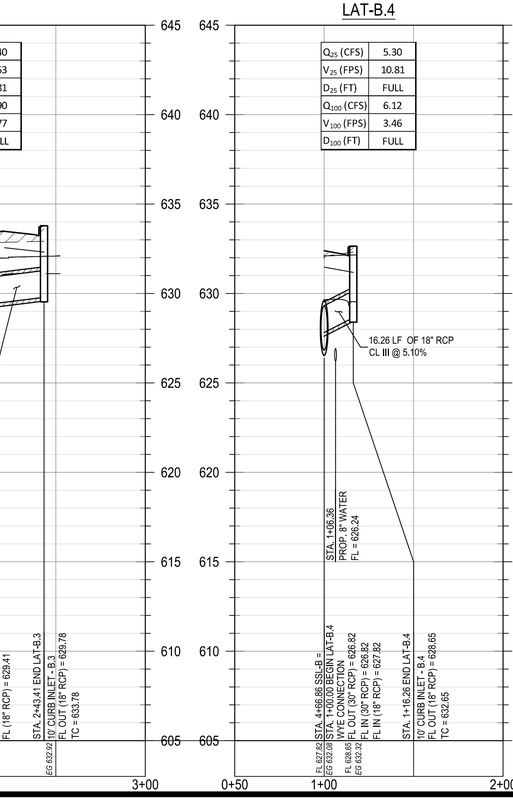

LAT-B.5

Q_{25} (CFS)	3.60
V_{25} (FPS)	8.52
D_{25} (FT)	1.45
Q_{100} (CFS)	5.10
V_{100} (FPS)	2.89
D_{100} (FT)	FULL

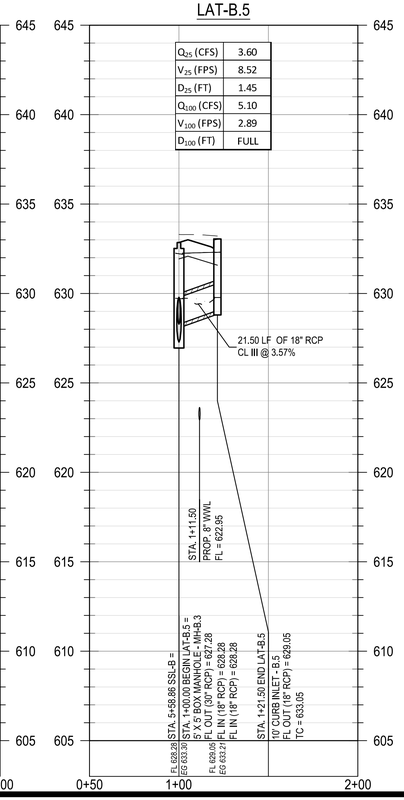

REV	DESCRIPTION	DATE	APR

DESIGNED BY: DAZ
REVIEWED BY: TMH
DRAWN BY: DAZ

BGE, INC.
1701 DIRECTORS BOULEVARD, SUITE 1000
AUSTIN, TX 78744
TBPE Registration No. F-1046
TEL: 512-879-0400 www.bgeinc.com

COTTONWOOD CREEK, PHASE II
HUTTO, TEXAS

SSL-A & SSL-B LATS

SUBMITTAL DATE: 03-15-2021

REGISTERED PROFESSIONAL ENGINEER
TIMOTHY M. HOLLIS
94548
LICENSED
STATE OF TEXAS
07/08/2021

SHEET
23 OF 54

Record Drawing

G:\TXCI\Projects\Lennar\8399-00-Cottonwood_PH2\LD\01_CAD\01_Shts\C-SP-STRM-PP&P-PH2.dwg Layout: SSL-A & SSL-B1 LATS Plotted: 7/7/2021 4:40:49 PM

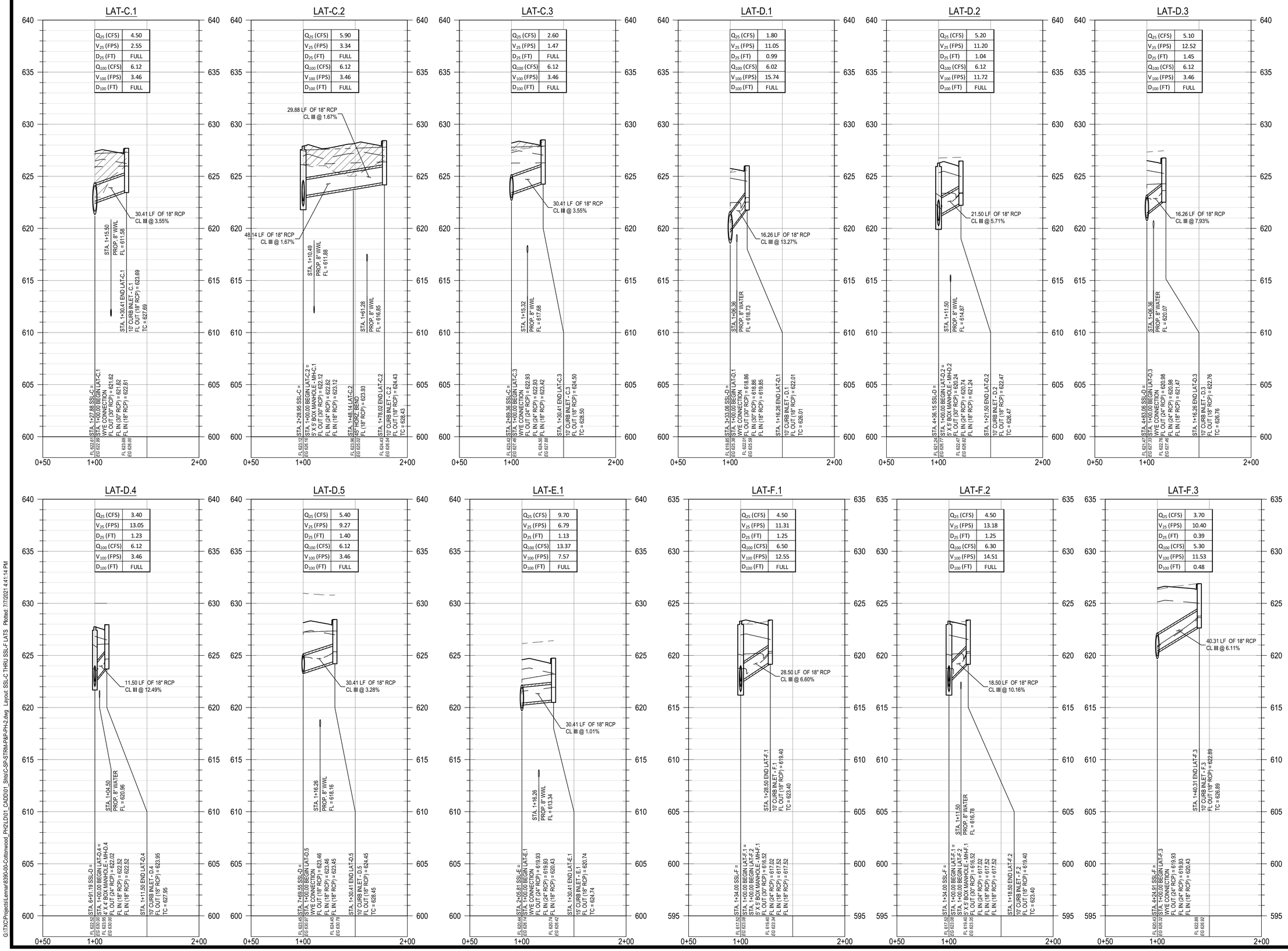

REV	DESCRIPTION	DATE	APR

DESIGNED BY: DAZ
REVIEWED BY: TMH
DRAWN BY: DAZ

BGE

BGE, INC.
1701 DIRECTORS BOULEVARD, SUITE 1000
AUSTIN, TX 78744
TBPE Registration No. F-1046
TEL: 512-879-0400 www.bgeinc.com

COTTONWOOD CREEK, PHASE II
HUTTO, TEXAS

SSL-C THRU SSL-F LATS

SUBMITTAL DATE: 03-15-2021

TIMOTHY MOLDER 94548 LICENSED PROFESSIONAL ENGINEER 07/08/2021

SHEET
24 OF 54

Record Drawing

G:\TXC\Projects\Lennar\8399-00-Cottonwood_PH2\LDV01_CADD\01_Shts\C-SP-STRM-P&P-PH-2.dwg Layout: SSL-C THRU SSL-F LATS Plotted: 7/7/2021 4:41:14 PM

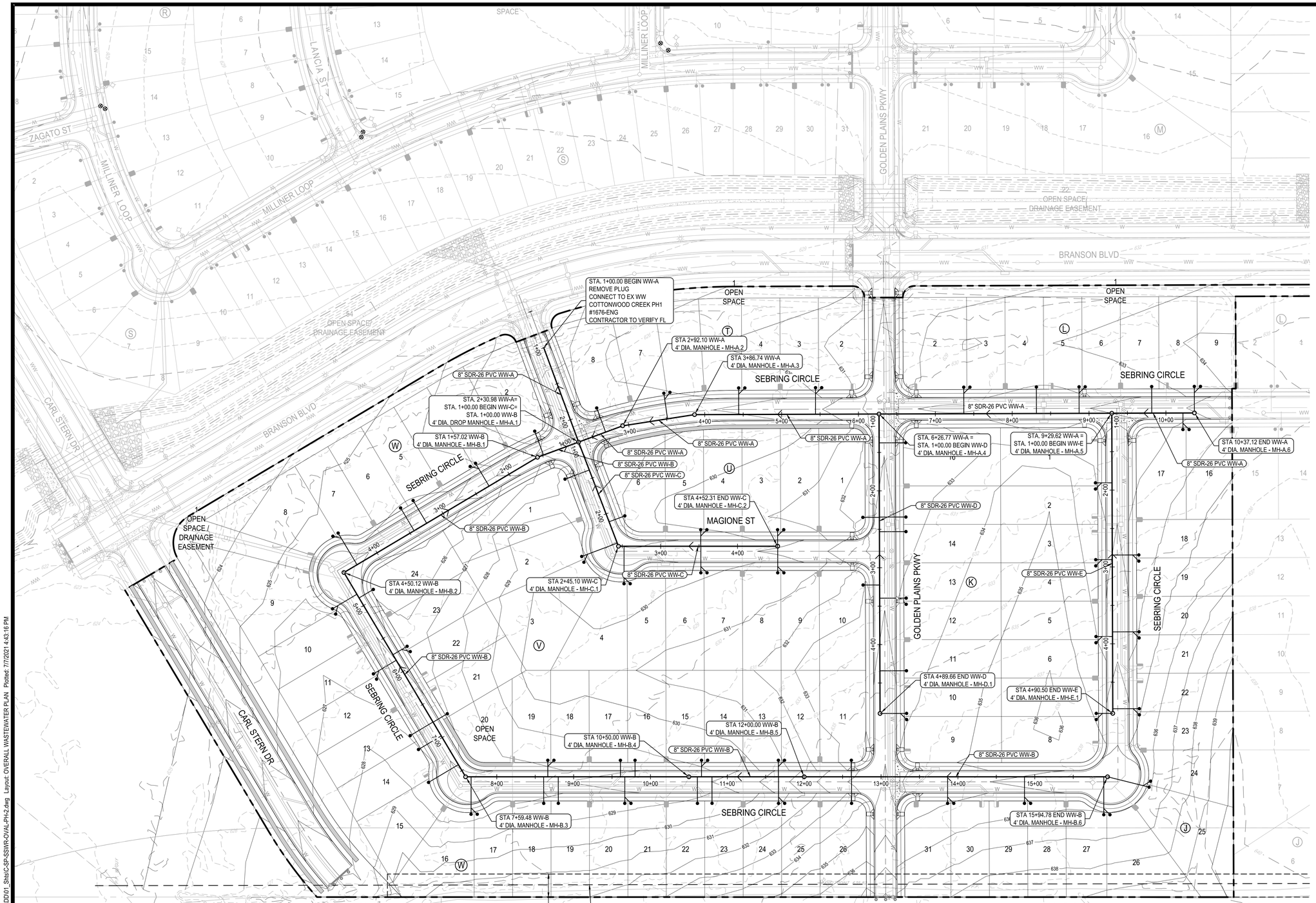

0 30' 60' 120'
SCALE: 1" = 60'

LEGEND

- PROPERTY BOUNDARY
- PROPOSED RIGHT OF WAY
- EXISTING MAJOR CONTOUR
- EXISTING MINOR CONTOUR
- PROPOSED MAJOR CONTOUR
- PROPOSED MINOR CONTOUR
- WASTEWATER LINE
- WASTEWATER MANHOLE
- DIRECTION OF FLOW
- DOUBLE WASTEWATER SERVICE
- SINGLE WASTEWATER SERVICE
- DOUBLE WATER SERVICE
- SINGLE WATER SERVICE

* ALL WASTEWATER SYMBOLS ARE NOT TO SCALE, AND ARE ONLY SHOWN FOR ILLUSTRATION PURPOSES. REFER TO DETAILS SHOWN IN THIS PLAN SET.

NOTE:

1. ALL ITEMS ARE TO BE FURNISHED AND INSTALLED BY CONTRACTOR. REFERENCE CONSTRUCTION DETAILS SHEETS FOR ADDITIONAL INFORMATION.
2. ALL GRAVITY LINES ARE TO BE INSTALLED FROM DOWNSTREAM TO UPSTREAM.
3. ALL WASTEWATER LINES SHALL BE PVC SDR-26 CONFORMING TO ASTM D30304 WITH MINIMUM PIPE STIFFNESS OF 115 PSI AS DETERMINED BY ASTM D2412.
4. AT ALL WATER LINE CROSSINGS, WASTEWATER MAIN SHALL BE ASTM 2241, SDR-26 CLASS 160 OR BETTER PVC FOR MINIMUM 20 FEET CENTERED ON WATER LINE.
5. CONTRACTOR SHALL MAINTAIN A MINIMUM SEPARATION DISTANCE IN ALL DIRECTIONS OF NINE FEET BETWEEN PROPOSED WATERLINE AND WASTEWATER COLLECTION FACILITIES INCLUDING MANHOLES. IF THIS DISTANCE CANNOT BE MAINTAINED, CONTRACTOR MUST IMMEDIATELY NOTIFY PROJECT ENGINEER FOR FURTHER DIRECTION.
6. TRACER TAPE SHALL BE PLACED ABOVE ALL PLASTIC PIPES.
7. CAUTION: CONTRACTOR TO VERIFY ALL EXISTING UTILITIES VERTICALLY AND HORIZONTALLY PRIOR TO CONSTRUCTION. CONTRACTOR TO NOTIFY THE ENGINEER IMMEDIATELY OF ANY DISCREPANCIES.
8. FOR ALL EXISTING MANHOLES MODIFIED BY CONSTRUCTION TO BE TESTED, REPAIRED AND RECOATED PER DETAIL WW-03.
9. CONTRACTOR TO PLACE MANHOLES AND CLEANOUTS OUTSIDE OF CURBS AND VALLEY GUTTERS.

Sanitary Sewer Line Capacity Calculations

Line #	Pipe Size (in)	Station	MH#	Upstream Slope (%)	# of SF LUEs Added	# of Other LUEs Added	Total # of LUEs	F	PDWF (gpm)	Area Added (AC)	Total Area (AC)	I/I(gpm)	PWWF (gpm)	Depth of PDWF (in)	% Full	Depth of PWWF (in)	% Full	Velocity (FULL, ft/s)
A	8	9+29.62	A5	2.88%	6	0	6	1.17	5.11	1.06	1.06	0.55	5.66	0.40	4.80%	0.40	5.00%	7.64
A	8	6+26.77	A4	0.83%	4	20	24	4.67	19.90	0.94	4.58	2.39	22.28	1.00	12.10%	1.00	12.70%	4.10
A	8	3+86.74	A3	0.50%	4	34	38	7.39	31.09	0.84	7.56	3.94	35.03	1.40	16.90%	1.40	17.90%	3.18
A	8	2+92.10	A2	0.50%	2	38	40	7.78	32.67	0.39	7.95	4.14	36.81	1.40	17.30%	1.50	18.40%	3.18
A	8	2+30.98	A1	1.04%	1	40	41	7.97	33.46	0.23	11.12	5.79	39.25	1.20	14.70%	1.30	15.90%	4.59
A	8	1+00.00	PLUG	0.34%	0	101	101	19.64	79.48	0.14	20.69	10.78	90.26	2.40	29.80%	2.50	31.90%	2.62
B	8	12+00.00	B5	1.27%	10	0	10	1.94	8.45	2.44	2.44	1.27	9.72	0.60	7.30%	0.60	7.80%	5.07
B	8	10+50.00	B4	1.30%	8	10	18	3.50	15.03	1.33	3.77	1.96	16.99	0.80	9.50%	0.80	10.10%	5.13
B	8	7+59.48	B3	1.26%	10	18	28	5.44	23.12	1.79	5.56	2.90	26.01	0.90	11.70%	1.00	12.40%	5.05
B	8	4+50.12	B2	0.50%	11	28	39	7.58	31.88	2.27	7.83	4.08	35.96	1.40	17.10%	1.50	18.20%	3.18
B	8	1+57.02	B1	0.50%	6	39	45	8.75	36.61	1.34	9.17	4.78	41.39	1.50	18.40%	1.60	19.50%	3.18
B	8	1+00.00	A1	0.50%	1	45	46	8.94	37.40	0.26	9.43	4.91	42.31	1.50	18.50%	1.60	19.70%	3.18
C	8	2+45.10	C1	0.61%	10	0	10	1.94	8.45	1.84	1.84	0.96	9.40	0.70	8.60%	0.70	9.10%	3.51
C	8	1+00.00	A1	2.19%	4	10	14	2.72	11.75	1.10	2.94	1.53	13.28	0.60	7.50%	0.60	7.90%	6.67
D	8	1+00.00	A4	1.12%	10	0	10	1.94	8.45	2.14	2.14	1.11	9.56	0.60	7.50%	0.60	7.90%	4.76
E	8	1+00.00	A5	0.93%	14	0	14	2.72	11.75	2.58	2.58	1.34	13.09	0.70	9.10%	0.80	9.60%	4.34

						APR
						DATE
						DESCRIPTION
◁	◁	◁	◁	◁	◁	REV

DESIGNED BY: DAZ
REVIEWED BY: TMH
DRAWN BY: DAZ

BGE, INC.
1701 DIRECTORS BOULEVARD, SUITE 1000
AUSTIN, TX 78744
TBPE Registration No. F-1046
TEL: 512-879-0400 www.brownbgy.com

COTTONWOOD CREEK, PHASE II
HUTTO, TEXAS

OVERALL WASTEWATER PLAN

SUBMITTAL DATE: 03-15-2021

STATE OF TEXAS
TIMOTHY M. HOLLAND
94848
LICENSED
PROFESSIONAL ENGINEER
07/08/2021

SHEET
25 OF 54

Record Drawing

G:\TXC\Projects\Lennar\8390-00-Cottonwood_PH2\LD\01_CADD\01_Sits\C-SP-SSWR-O\VAL-PH-2.dwg Layout: OVERALL WASTEWATER PLAN Plotted: 7/7/2021 4:43:16 PM

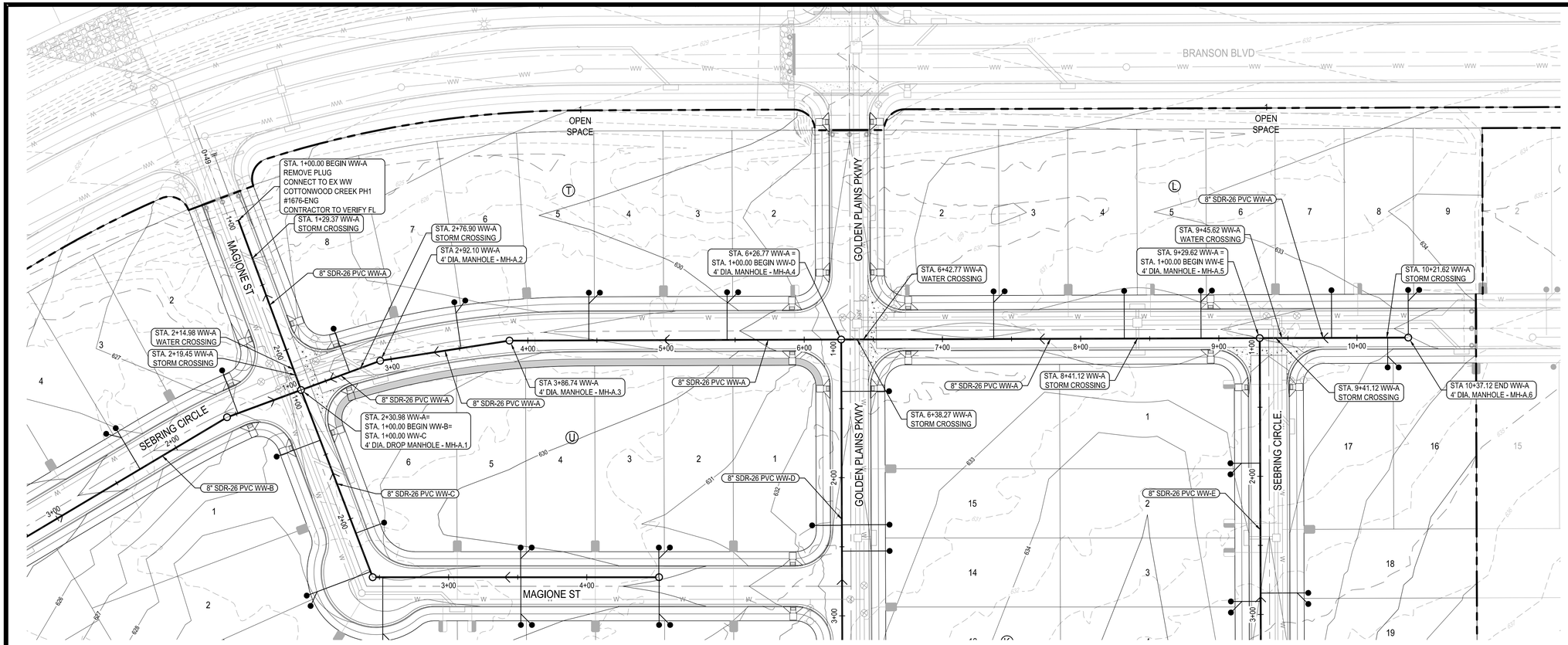

0 20' 40' 80'
SCALE: 1" = 40'

LEGEND

- PROPERTY BOUNDARY
- PROPOSED RIGHT OF WAY
- EXISTING MAJOR CONTOUR
- EXISTING MINOR CONTOUR
- PROPOSED MAJOR CONTOUR
- PROPOSED MINOR CONTOUR
- WASTEWATER LINE
- WASTEWATER MANHOLE
- DIRECTION OF FLOW
- DOUBLE WASTEWATER SERVICE
- SINGLE WASTEWATER SERVICE
- DOUBLE WATER SERVICE
- SINGLE WATER SERVICE

* ALL WASTEWATER SYMBOLS ARE NOT TO SCALE, AND ARE ONLY SHOWN FOR ILLUSTRATION PURPOSES. REFER TO DETAILS SHOWN IN THIS PLAN SET.

NOTE:

1. ALL MANHOLES SHALL BE COATED WITH RAVEN 405, OR APPROVED EQUAL, WITH A UNIFORM THICKNESS OF 124 MILS AND A MINIMUM THICKNESS OF 100 MILS, APPLIED AFTER MANHOLES HAVE PASSED THE VACUUM TEST (CITY STANDARD WW-03).
2. TOPS OF MANHOLES UNDER PAVEMENT SHALL BE ADJUSTED TO MATCH FINISH GRADES PRIOR TO ACCEPTANCE OF WORK.
3. CORE EXISTING MANHOLE, INSERT GASKET AND PROVIDE PRECO GROUT SEAL INSIDE AND OUR, OR APPROVED EQUAL.
4. ALL WASTEWATER LINES SHALL BE PVC SDR-26 CONFORMING TO ASTM D3034 WITH MINIMUM PIPE STIFFNESS OF 115 PSI AS DETERMINED BY ASTM D2412.
5. AT ALL WATERLINE CROSSINGS, WASTEWATER MAIN SHALL BE ASTM 2241, SDR-26CLASS 160 OR BETTER PVC FOR MINIMUM 20 FEET CENTERED ON THE WATERLINE.
6. CONTRACTOR SHALL MAINTAIN A MINIMUM SEPARATION DISTANCE IN ALL DIRECTIONS OF NINE FEET BETWEEN PROPOSED WATERLINE AND WASTEWATER COLLECTION FACILITIES INCLUDING MANHOLES. IF THIS DISTANCE CANNOT BE MAINTAINED, CONTRACTOR MUST IMMEDIATELY NOTIFY PROJECT ENGINEER FOR FURTHER DIRECTION.
7. ALL GRAVITY LINES ARE TO BE INSTALLED FROM DOWNSTREAM TO UPSTREAM.
8. TRACER TAPE SHALL BE PLACED ABOVE ALL PLASTIC PIPES.
9. WHERE WATER LINE CROSSES UNDER WASTEWATER LINES, THE WATER LINE SHALL BE ENCASED IN AN 18 FOOT MINIMUM LENGTH STEEL ENCASEMENT PIPE CENTERED ON THE WATER LINE AND SHALL BE AT LEAST TWO NOMINAL PIPE DIAMETERS LARGER THAN THE WATER LINE PER TAC PART 1, CHAPTER 290, SUBCHAPTER D, RULE 290.44 AND THE CITY OF HUTTO DETAIL W-14.

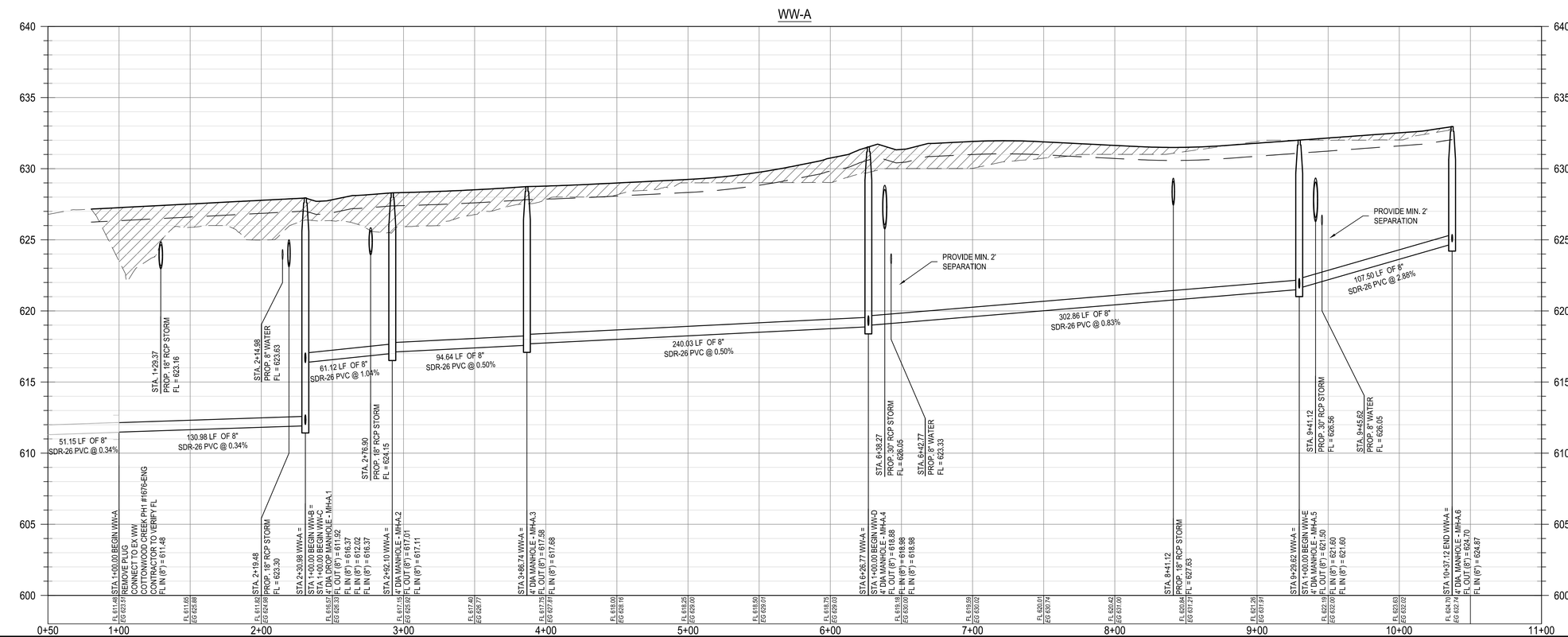

PROFILE LEGEND

- FINISHED GRADE
- PROPOSED SUBGRADE
- EXISTING GRADE
- PROPOSED WASTEWATER LINE
- PROPOSED WASTEWATER MANHOLE

REV	DESCRIPTION	DATE	APR

DESIGNED BY: DAZ
REVIEWED BY: TMH
DRAWN BY: DAZ

BGE, INC.
1701 DIRECTORS BOULEVARD, SUITE 1000
AUSTIN, TX 78744
TBPE Registration No. F-1046
TEL: 512-879-0400 www.browngay.com

COTTONWOOD CREEK, PHASE II
HUTTO, TEXAS

WW-A PLAN AND PROFILE (1+00 TO END)

SUBMITTAL DATE: 03-15-2021

TIMOTHY M. HOLLAND 94546 LICENSED PROFESSIONAL ENGINEER 03/08/2021

SHEET
26 OF 54

Record Drawing

G:\TXCI\Projects\Lennar\6390-00-Cottonwood_PH2\LDV01_CADD\01_Sht\C-SP-SSWR-P&P-PH-2.dwg Layout: WW-A PLAN AND PROFILE (1+00 TO END) Plotted: 7/8/2021 3:09:18 PM

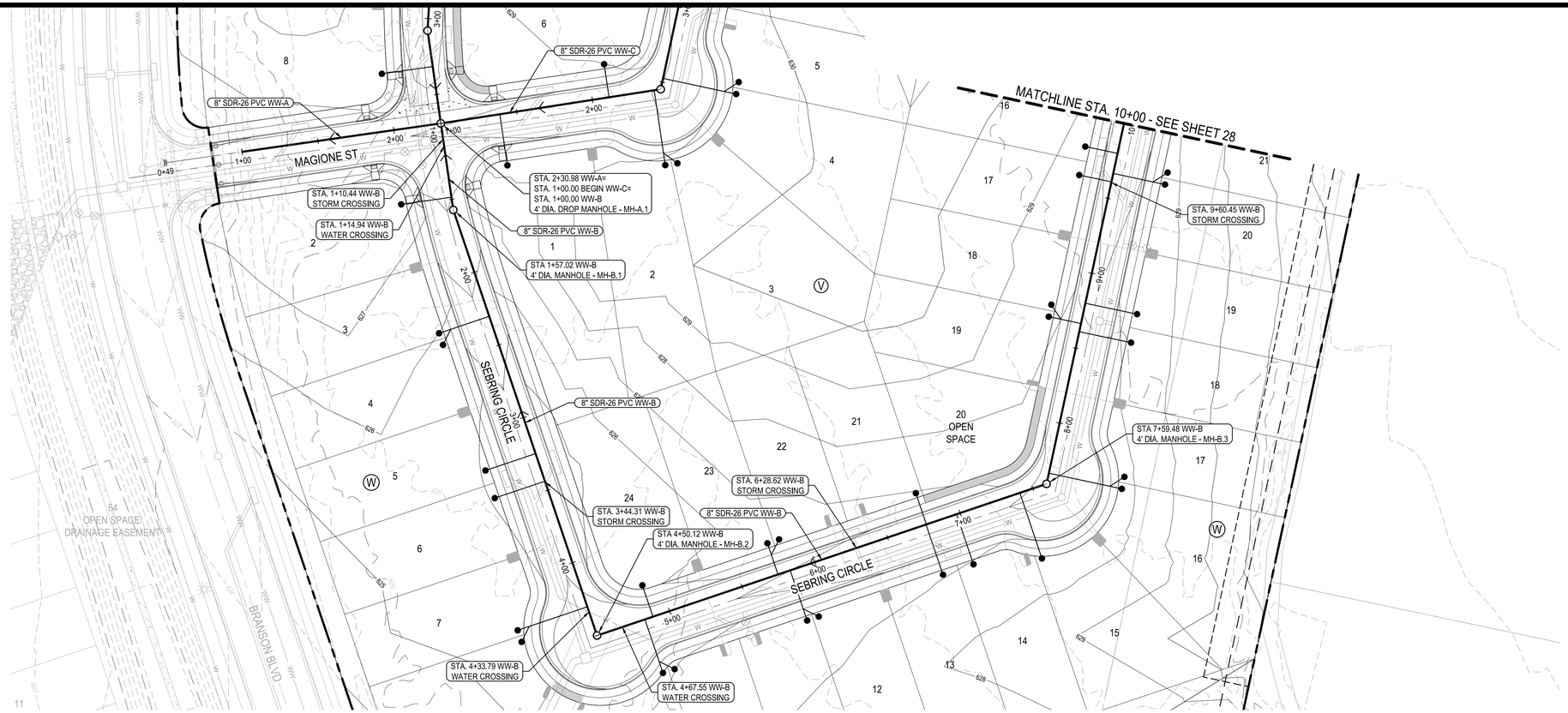

N

0 20' 40' 80'

SCALE: 1" = 40'

LEGEND

- PROPERTY BOUNDARY
- PROPOSED RIGHT OF WAY
- EXISTING MAJOR CONTOUR
- EXISTING MINOR CONTOUR
- PROPOSED MAJOR CONTOUR
- PROPOSED MINOR CONTOUR
- WASTEWATER LINE
- WASTEWATER MANHOLE
- DIRECTION OF FLOW
- DOUBLE WASTEWATER SERVICE
- SINGLE WASTEWATER SERVICE
- DOUBLE WATER SERVICE
- SINGLE WATER SERVICE

* ALL WASTEWATER SYMBOLS ARE NOT TO SCALE, AND ARE ONLY SHOWN FOR ILLUSTRATION PURPOSES. REFER TO DETAILS SHOWN IN THIS PLAN SET.

NOTE:

1. ALL MANHOLES SHALL BE COATED WITH RAVEN 405, OR APPROVED EQUAL, WITH A UNIFORM THICKNESS OF 124 MILS AND A MINIMUM THICKNESS OF 100 MILS, APPLIED AFTER MANHOLES HAVE PASSED THE VACUUM TEST (CITY STANDARD WW-03).
2. TOPS OF MANHOLES UNDER PAVEMENT SHALL BE ADJUSTED TO MATCH FINISH GRADES PRIOR TO ACCEPTANCE OF WORK.
3. CORE EXISTING MANHOLE, INSERT GASKET AND PROVIDE PRECO GROUT SEAL INSIDE AND OUR, OR APPROVED EQUAL.
4. ALL WASTEWATER LINES SHALL BE PVC SDR-26 CONFORMING TO ASTM D3034 WITH MINIMUM PIPE STIFFNESS OF 115 PSI AS DETERMINED BY ASTM D2412.
5. AT ALL WATERLINE CROSSINGS, WASTEWATER MAIN SHALL BE ASTM 2241, SDR-26CLASS 160 OR BETTER PVC FOR MINIMUM 20 FEET CENTERED ON THE WATERLINE.
6. CONTRACTOR SHALL MAINTAIN A MINIMUM SEPARATION DISTANCE IN ALL DIRECTIONS OF NINE FEET BETWEEN PROPOSED WATERLINE AND WASTEWATER COLLECTION FACILITIES INCLUDING MANHOLES. IF THIS DISTANCE CANNOT BE MAINTAINED, CONTRACTOR MUST IMMEDIATELY NOTIFY PROJECT ENGINEER FOR FURTHER DIRECTION.
7. ALL GRAVITY LINES ARE TO BE INSTALLED FROM DOWNSTREAM TO UPSTREAM.
8. TRACER TAPE SHALL BE PLACED ABOVE ALL PLASTIC PIPES.
9. WHERE WATER LINE CROSSES UNDER WASTEWATER LINES, THE WATER LINE SHALL BE ENCASED IN AN 18 FOOT MINIMUM LENGTH STEEL ENCASEMENT PIPE CENTERED ON THE WATER LINE AND SHALL BE AT LEAST TWO NOMINAL PIPE DIAMETERS LARGER THAN THE WATER LINE PER TAC PART 1. CHAPTER 290, SUBCHAPTER D, RULE 290.44 AND THE CITY OF HUTTO DETAIL W-14.

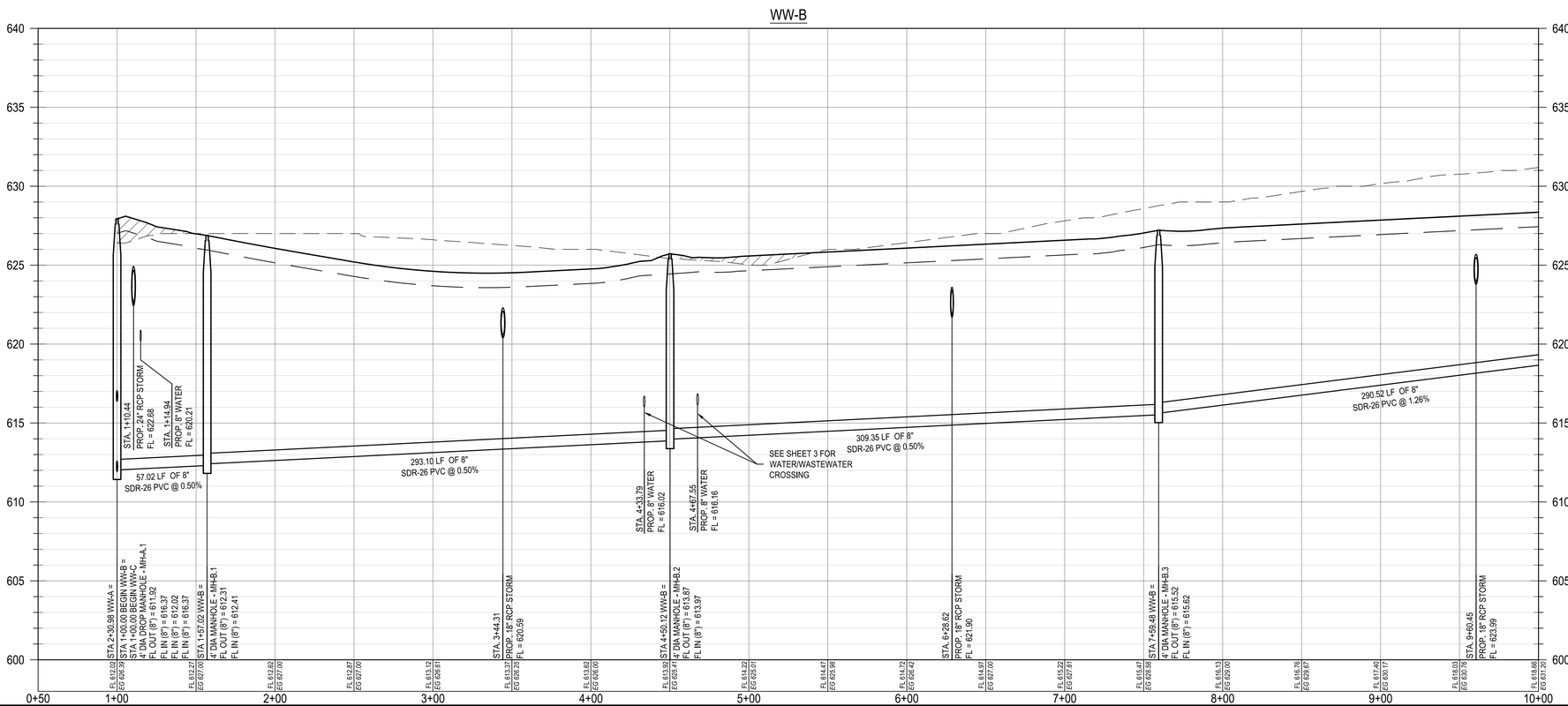

PROFILE LEGEND

- FINISHED GRADE
- PROPOSED SUBGRADE
- EXISTING GRADE
- PROPOSED WASTEWATER LINE
- PROPOSED WASTEWATER MANHOLE

REV	DESCRIPTION	DATE	APR

DESIGNED BY: DAZ
REVIEWED BY: TMH
DRAWN BY: DAZ

BGE
BGE, INC.
1701 DIRECTORS BOULEVARD, SUITE 1000
AUSTIN, TX 78744
TBPE Registration No. F-1046
TEL: 512-879-0400 www.browngay.com

COTTONWOOD CREEK, PHASE II
HUTTO, TEXAS

WW-B PLAN AND PROFILE (1+00 TO 10+00)

SUBMITTAL DATE: 03-15-2021

STATE OF TEXAS
TIMOTHY M. HOLLAND
94848
LICENSED
PROFESSIONAL ENGINEER
07/08/2021

SHEET
27 OF 54

Record Drawing

G:\TXC\Projects\Lennar\8390-04-Cottonwood_PH2\LDV01_CADD\01_Sits\C-SP-SS\WR-P&P-PH-2.dwg Layout: WW-B PLAN AND PROFILE (1+00 TO 10+00) Plotted: 7/7/2021 4:46:40 PM

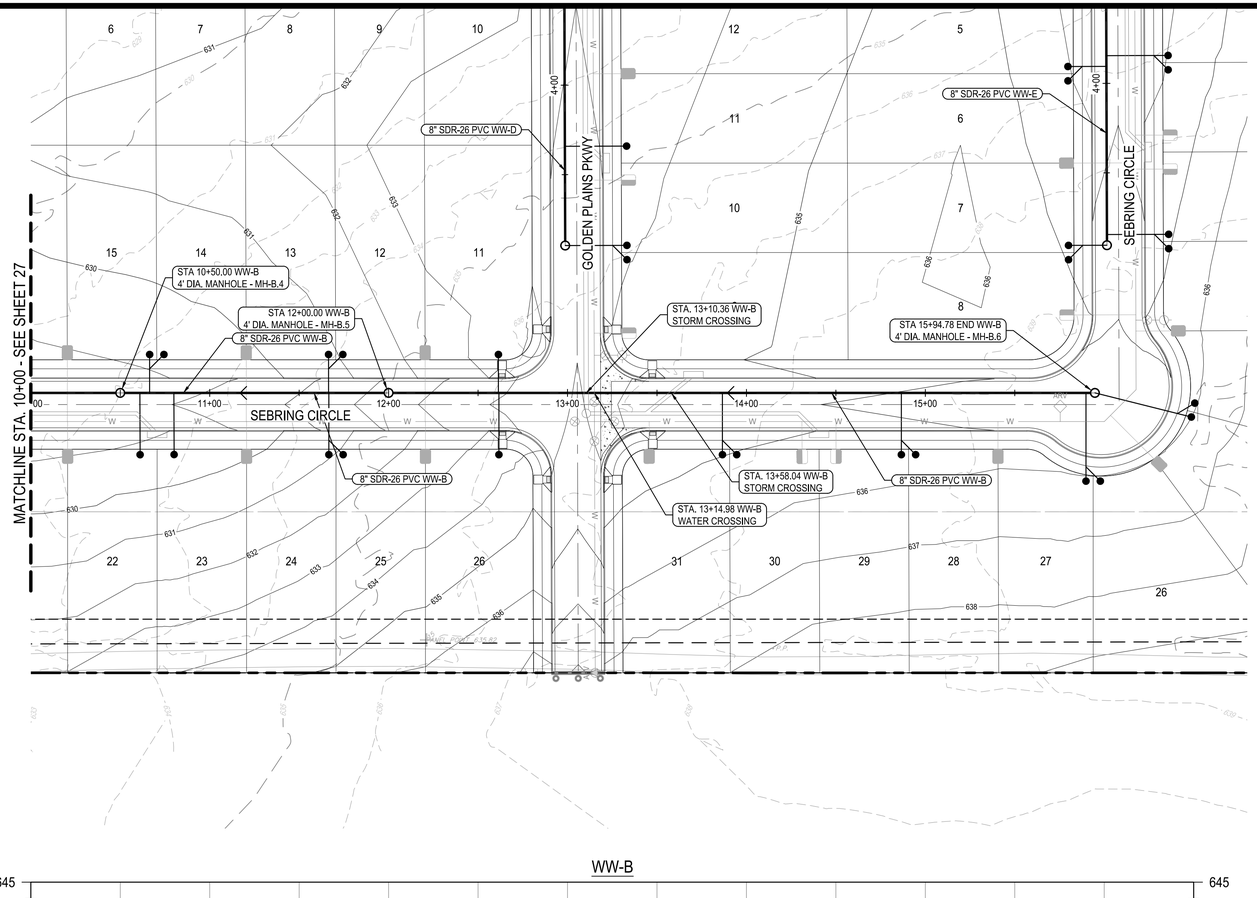

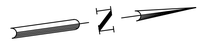

0 20' 40' 80'
SCALE: 1" = 40'

LEGEND

- PROPERTY BOUNDARY
- PROPOSED RIGHT OF WAY
- EXISTING MAJOR CONTOUR
- EXISTING MINOR CONTOUR
- PROPOSED MAJOR CONTOUR
- PROPOSED MINOR CONTOUR
- WASTEWATER LINE
- WASTEWATER MANHOLE
- DIRECTION OF FLOW
- DOUBLE WASTEWATER SERVICE
- SINGLE WASTEWATER SERVICE
- DOUBLE WATER SERVICE
- SINGLE WATER SERVICE

* ALL WASTEWATER SYMBOLS ARE NOT TO SCALE, AND ARE ONLY SHOWN FOR ILLUSTRATION PURPOSES. REFER TO DETAILS SHOWN IN THIS PLAN SET.

NOTE:

1. ALL MANHOLES SHALL BE COATED WITH RAVEN 405, OR APPROVED EQUAL, WITH A UNIFORM THICKNESS OF 124 MILS AND A MINIMUM THICKNESS OF 100 MILS, APPLIED AFTER MANHOLES HAVE PASSED THE VACUUM TEST (CITY STANDARD WW-03).
2. TOPS OF MANHOLES UNDER PAVEMENT SHALL BE ADJUSTED TO MATCH FINISH GRADES PRIOR TO ACCEPTANCE OF WORK.
3. CORE EXISTING MANHOLE, INSERT GASKET AND PROVIDE PRECO GROUT SEAL INSIDE AND OUR, OR APPROVED EQUAL.
4. ALL WASTEWATER LINES SHALL BE PVC SDR-26 CONFORMING TO ASTM D3034 WITH MINIMUM PIPE STIFFNESS OF 115 PSI AS DETERMINED BY ASTM D2412.
5. AT ALL WATERLINE CROSSINGS, WASTEWATER MAIN SHALL BE ASTM 2241, SDR-26CLASS 160 OR BETTER PVC FOR MINIMUM 20 FEET CENTERED ON THE WATERLINE.
6. CONTRACTOR SHALL MAINTAIN A MINIMUM SEPARATION DISTANCE IN ALL DIRECTIONS OF NINE FEET BETWEEN PROPOSED WATERLINE AND WASTEWATER COLLECTION FACILITIES INCLUDING MANHOLES. IF THIS DISTANCE CANNOT BE MAINTAINED, CONTRACTOR MUST IMMEDIATELY NOTIFY PROJECT ENGINEER FOR FURTHER DIRECTION.
7. ALL GRAVITY LINES ARE TO BE INSTALLED FROM DOWNSTREAM TO UPSTREAM.
8. TRACER TAPE SHALL BE PLACED ABOVE ALL PLASTIC PIPES.
9. WHERE WATER LINE CROSSES UNDER WASTEWATER LINES, THE WATER LINE SHALL BE ENCASED IN AN 18 FOOT MINIMUM LENGTH STEEL ENCASEMENT PIPE CENTERED ON THE WATER LINE AND SHALL BE AT LEAST TWO NOMINAL PIPE DIAMETERS LARGER THAN THE WATER LINE PER TAC PART 1. CHAPTER 290, SUBCHAPTER D, RULE 290.44 AND THE CITY OF HUTTO DETAIL W-14.

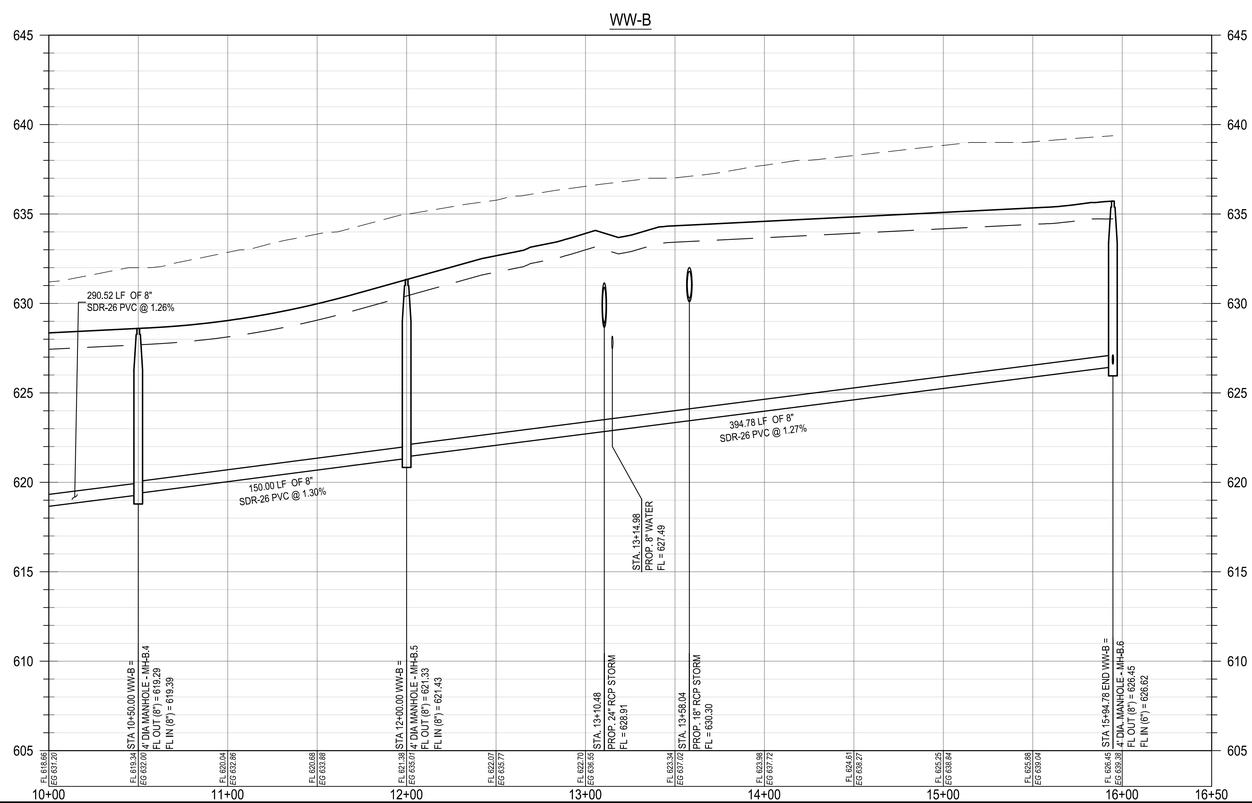

PROFILE LEGEND

- FINISHED GRADE
- PROPOSED SUBGRADE
- EXISTING GRADE
- PROPOSED WASTEWATER LINE
- PROPOSED WASTEWATER MANHOLE

REV	DESCRIPTION	DATE	APR

DESIGNED BY: DAZ
REVIEWED BY: TMH
DRAWN BY: DAZ

BGE, INC.
1701 DIRECTORS BOULEVARD, SUITE 1000
AUSTIN, TX 78744
TBPE Registration No. F-1046
TEL: 512-879-0400 www.bgeinc.com

COTTONWOOD CREEK, PHASE II
HUTTO, TEXAS

WW-B PLAN AND PROFILE (10+00 TO END)

SUBMITTAL DATE: 03-15-2021

STATE OF TEXAS
TIMOTHY M. HOLLAND
94848
LICENSED PROFESSIONAL ENGINEER
07/08/2021

SHEET
28 OF 54

G:\TXC\Projects\Lennar\8390-00-Cottonwood_PH2\LDV01_CADD\01_Sits\C-SP-SS\WR-P&P-PH-2.dwg Layout: WW-B PLAN AND PROFILE (10+00 TO END) Plotted: 7/7/2021 4:47:04 PM

Record Drawing

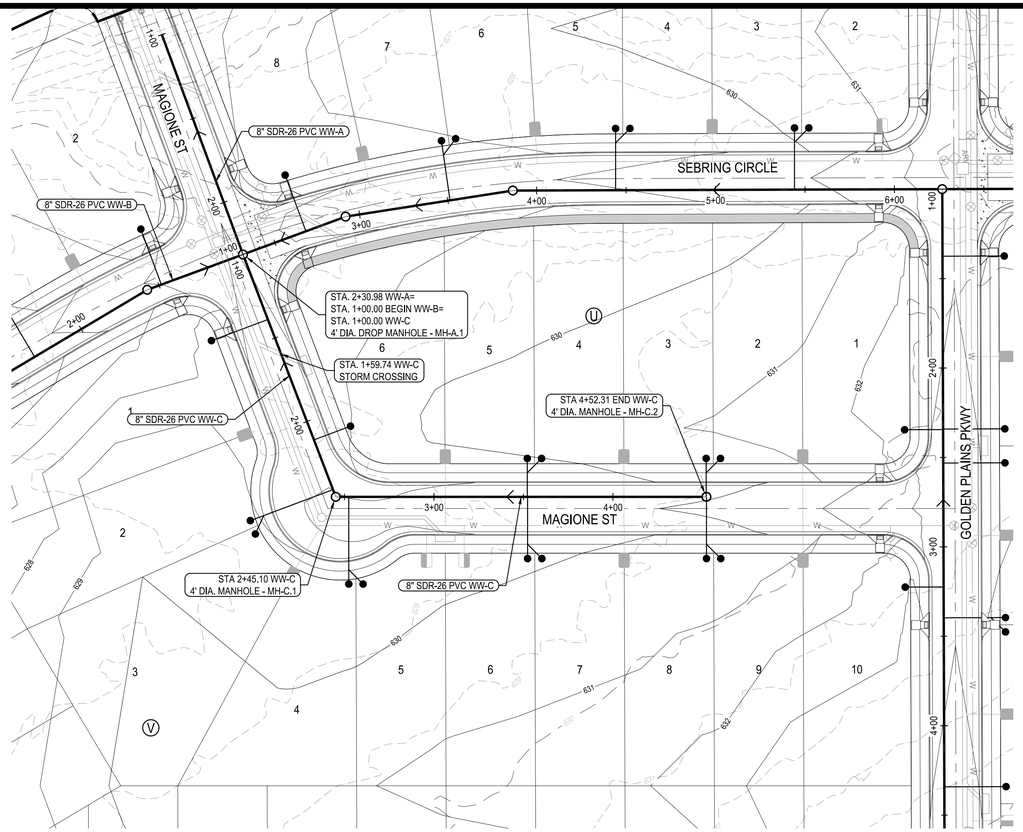

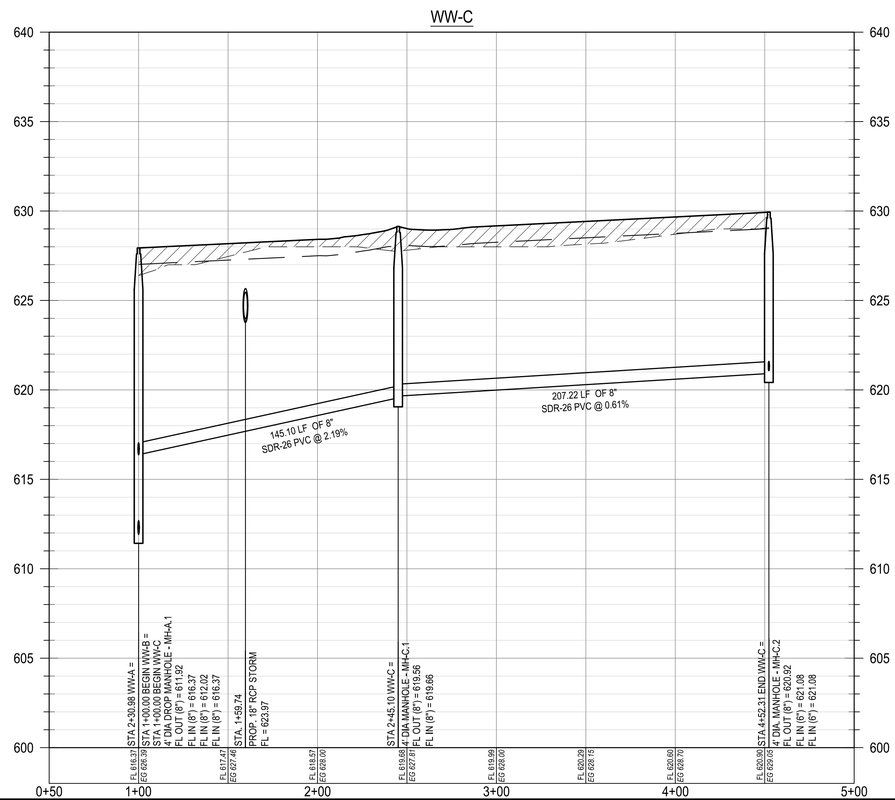

0 20' 40' 80'
SCALE: 1" = 40'

LEGEND

- PROPERTY BOUNDARY
- PROPOSED RIGHT OF WAY
- EXISTING MAJOR CONTOUR
- EXISTING MINOR CONTOUR
- PROPOSED MAJOR CONTOUR
- PROPOSED MINOR CONTOUR
- WASTEWATER LINE
- WASTEWATER MANHOLE
- DIRECTION OF FLOW
- DOUBLE WASTEWATER SERVICE
- SINGLE WASTEWATER SERVICE
- DOUBLE WATER SERVICE
- SINGLE WATER SERVICE

* ALL WASTEWATER SYMBOLS ARE NOT TO SCALE, AND ARE ONLY SHOWN FOR ILLUSTRATION PURPOSES. REFER TO DETAILS SHOWN IN THIS PLAN SET.

NOTE:

1. ALL MANHOLES SHALL BE COATED WITH RAVEN 405, OR APPROVED EQUAL, WITH A UNIFORM THICKNESS OF 124 MILS AND A MINIMUM THICKNESS OF 100 MILS, APPLIED AFTER MANHOLES HAVE PASSED THE VACUUM TEST (CITY STANDARD WW-03).
2. TOPS OF MANHOLES UNDER PAVEMENT SHALL BE ADJUSTED TO MATCH FINISH GRADES PRIOR TO ACCEPTANCE OF WORK.
3. CORE EXISTING MANHOLE, INSERT GASKET AND PROVIDE PRECO GROUT SEAL INSIDE AND OUR, OR APPROVED EQUAL.
4. ALL WASTEWATER LINES SHALL BE PVC SDR-26 CONFORMING TO ASTM D3034 WITH MINIMUM PIPE STIFFNESS OF 115 PSI AS DETERMINED BY ASTM D2412.
5. AT ALL WATERLINE CROSSINGS, WASTEWATER MAIN SHALL BE ASTM 2241, SDR-26CLASS 160 OR BETTER PVC FOR MINIMUM 20 FEET CENTERED ON THE WATERLINE.
6. CONTRACTOR SHALL MAINTAIN A MINIMUM SEPARATION DISTANCE IN ALL DIRECTIONS OF NINE FEET BETWEEN PROPOSED WATERLINE AND WASTEWATER COLLECTION FACILITIES INCLUDING MANHOLES. IF THIS DISTANCE CANNOT BE MAINTAINED, CONTRACTOR MUST IMMEDIATELY NOTIFY PROJECT ENGINEER FOR FURTHER DIRECTION.
7. ALL GRAVITY LINES ARE TO BE INSTALLED FROM DOWNSTREAM TO UPSTREAM.
8. TRACER TAPE SHALL BE PLACED ABOVE ALL PLASTIC PIPES.
9. WHERE WATER LINE CROSSES UNDER WASTEWATER LINES, THE WATER LINE SHALL BE ENCASED IN AN 18 FOOT MINIMUM LENGTH STEEL ENCASEMENT PIPE CENTERED ON THE WATER LINE AND SHALL BE AT LEAST TWO NOMINAL PIPE DIAMETERS LARGER THAN THE WATER LINE PER TAC PART 1. CHAPTER 290, SUBCHAPTER D, RULE 290.44 AND THE CITY OF HUTTO DETAIL W-14.

PROFILE LEGEND

- FINISHED GRADE
- PROPOSED SUBGRADE
- EXISTING GRADE
- PROPOSED WASTEWATER LINE
- PROPOSED WASTEWATER MANHOLE

REV	DESCRIPTION	DATE	APR

DESIGNED BY: DAZ
REVIEWED BY: TMH
DRAWN BY: DAZ

BGE
BGE, INC.
1701 DIRECTORS BOULEVARD, SUITE 1000
AUSTIN, TX 78744
TBPE Registration No. F-1046
TEL: 512-879-0400 www.bgeinc.com

COTTONWOOD CREEK, PHASE II
HUTTO, TEXAS

WW-C PLAN AND PROFILE (1+00 TO END)

SUBMITTAL DATE: 03-15-2021

STATE OF TEXAS
TIMOTHY M. HOLLAND
94848
LICENSED
PROFESSIONAL ENGINEER
07/08/2021

SHEET
29 OF 54

Record Drawing

G:\TXC\Projects\Lennar\8390-00-Cottonwood_PH2\LDV01_CADD\01_Sits\C-SP-SS\WR-P&P-PH-2.dwg Layout: WW-C PLAN AND PROFILE (1+00 TO END) Plotted: 7/7/2021 4:47:40 PM

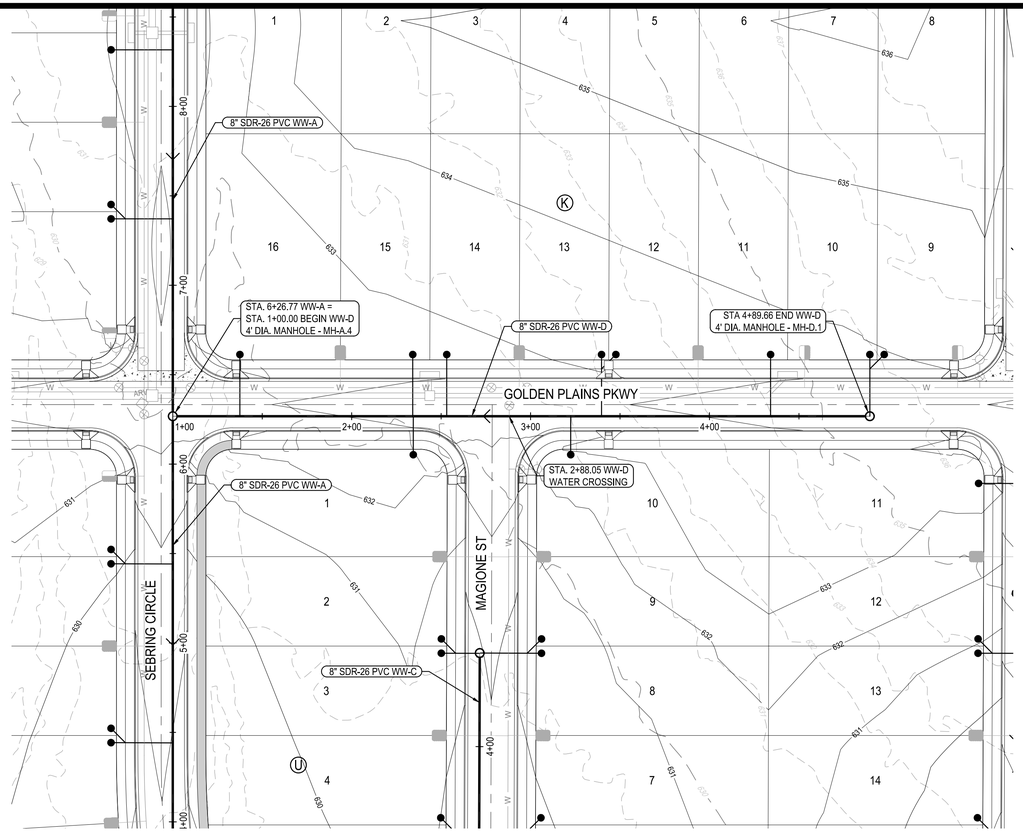

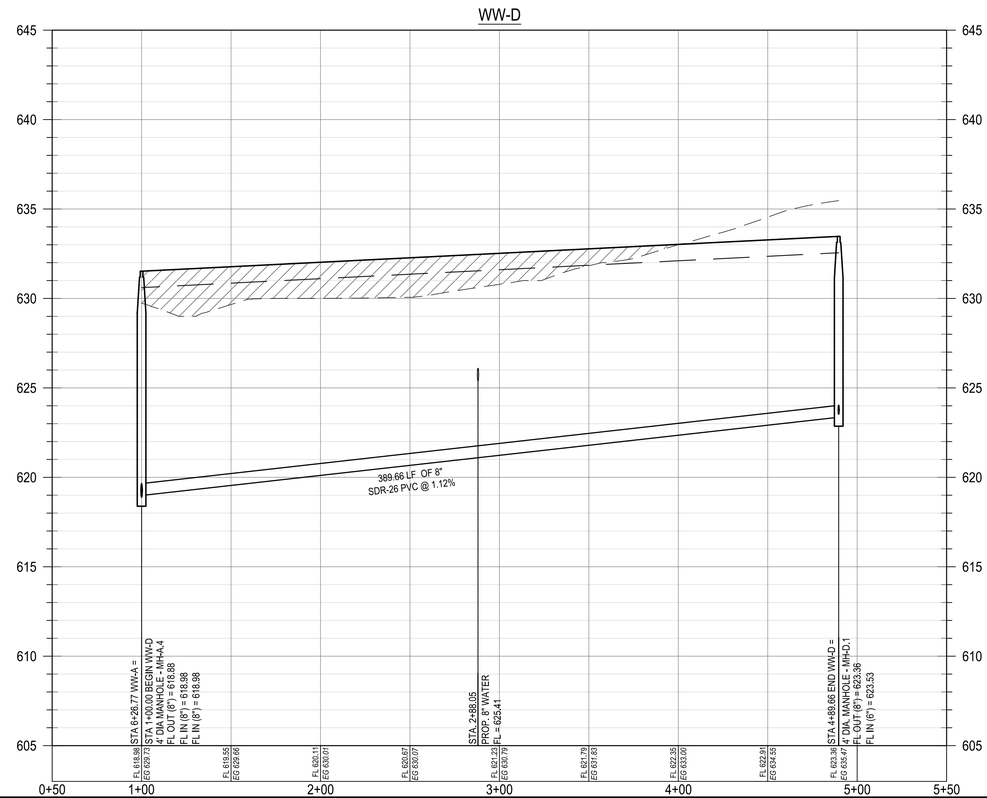

0 20' 40' 80'
SCALE: 1" = 40'

LEGEND

- PROPERTY BOUNDARY
- PROPOSED RIGHT OF WAY
- EXISTING MAJOR CONTOUR
- EXISTING MINOR CONTOUR
- PROPOSED MAJOR CONTOUR
- PROPOSED MINOR CONTOUR
- WASTEWATER LINE
- WASTEWATER MANHOLE
- DIRECTION OF FLOW
- DOUBLE WASTEWATER SERVICE
- SINGLE WASTEWATER SERVICE
- DOUBLE WATER SERVICE
- SINGLE WATER SERVICE

* ALL WASTEWATER SYMBOLS ARE NOT TO SCALE, AND ARE ONLY SHOWN FOR ILLUSTRATION PURPOSES. REFER TO DETAILS SHOWN IN THIS PLAN SET.

NOTE:

1. ALL MANHOLES SHALL BE COATED WITH RAVEN 405, OR APPROVED EQUAL, WITH A UNIFORM THICKNESS OF 124 MILS AND A MINIMUM THICKNESS OF 100 MILS, APPLIED AFTER MANHOLES HAVE PASSED THE VACUUM TEST (CITY STANDARD WW-03).
2. TOPS OF MANHOLES UNDER PAVEMENT SHALL BE ADJUSTED TO MATCH FINISH GRADES PRIOR TO ACCEPTANCE OF WORK.
3. CORE EXISTING MANHOLE, INSERT GASKET AND PROVIDE PRECO GROUT SEAL INSIDE AND OUR, OR APPROVED EQUAL.
4. ALL WASTEWATER LINES SHALL BE PVC SDR-26 CONFORMING TO ASTM D3034 WITH MINIMUM PIPE STIFFNESS OF 115 PSI AS DETERMINED BY ASTM D2412.
5. AT ALL WATERLINE CROSSINGS, WASTEWATER MAIN SHALL BE ASTM 2241, SDR-26CLASS 160 OR BETTER PVC FOR MINIMUM 20 FEET CENTERED ON THE WATERLINE.
6. CONTRACTOR SHALL MAINTAIN A MINIMUM SEPARATION DISTANCE IN ALL DIRECTIONS OF NINE FEET BETWEEN PROPOSED WATERLINE AND WASTEWATER COLLECTION FACILITIES INCLUDING MANHOLES. IF THIS DISTANCE CANNOT BE MAINTAINED, CONTRACTOR MUST IMMEDIATELY NOTIFY PROJECT ENGINEER FOR FURTHER DIRECTION.
7. ALL GRAVITY LINES ARE TO BE INSTALLED FROM DOWNSTREAM TO UPSTREAM.
8. TRACER TAPE SHALL BE PLACED ABOVE ALL PLASTIC PIPES.
9. WHERE WATER LINE CROSSES UNDER WASTEWATER LINES, THE WATER LINE SHALL BE ENCASED IN AN 18 FOOT MINIMUM LENGTH STEEL ENCASEMENT PIPE CENTERED ON THE WATER LINE AND SHALL BE AT LEAST TWO NOMINAL PIPE DIAMETERS LARGER THAN THE WATER LINE PER TAC PART 1. CHAPTER 290, SUBCHAPTER D, RULE 290.44 AND THE CITY OF HUTTO DETAIL W-14.

PROFILE LEGEND

- FINISHED GRADE
- PROPOSED SUBGRADE
- EXISTING GRADE
- PROPOSED WASTEWATER LINE
- PROPOSED WASTEWATER MANHOLE

REV	DESCRIPTION	DATE	APR

DESIGNED BY:	DAZ
REVIEWED BY:	TMH
DRAWN BY:	DAZ

BGE
BGE, INC.
1701 DIRECTORS BOULEVARD, SUITE 1000
AUSTIN, TX 78744
TBPE Registration No. F-1046
TEL: 512-879-0400 www.bgeinc.com

COTTONWOOD CREEK, PHASE II
HUTTO, TEXAS

WW-D PLAN AND PROFILE (1+00 TO END)

SUBMITTAL DATE: 03-15-2021

STATE OF TEXAS
TIMOTHY M. HOLLAND
94848
LICENSED
PROFESSIONAL ENGINEER
07/08/2021

SHEET
30 OF 54

G:\TXC\Projects\Lennar\8390-00-Cottonwood_PH2\LDV01_CADD\01_Site\C-SP-SS\WR-P&P-PH-2.dwg Layout: WW-D PLAN AND PROFILE (1+00 TO END) Plotted: 7/7/2021 4:48:15 PM

Record Drawing

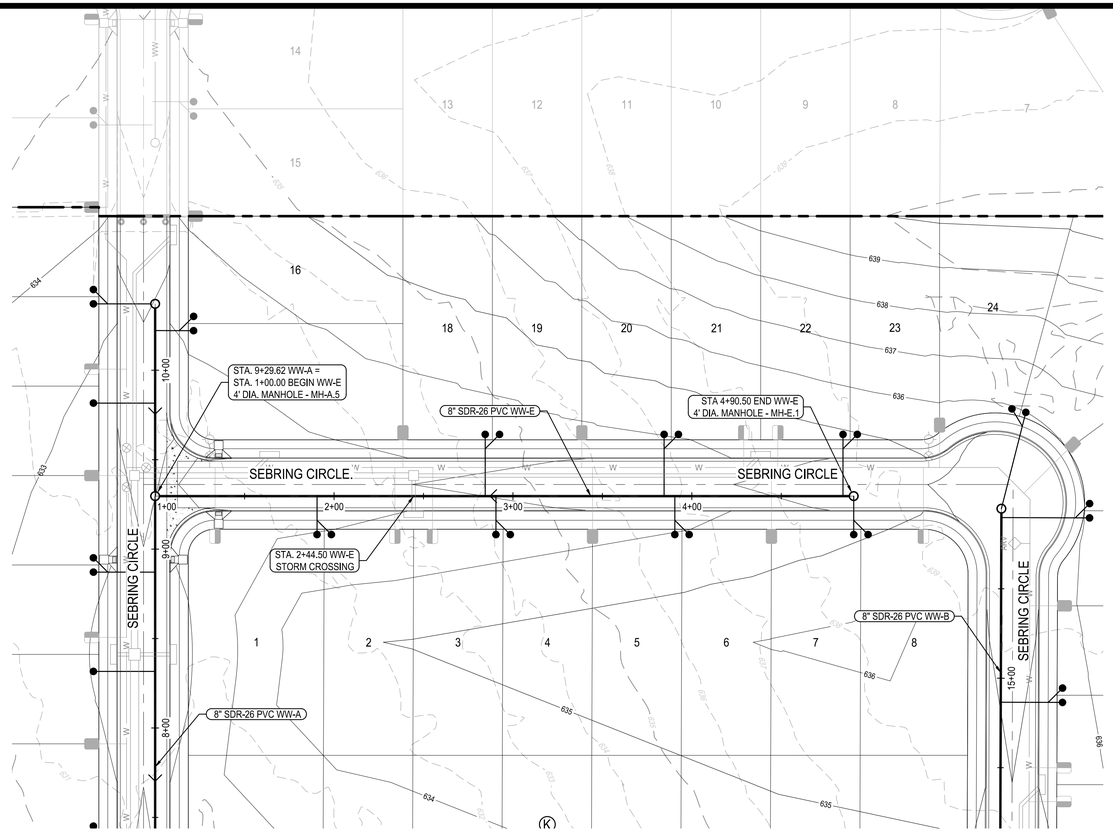

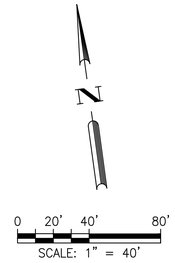

LEGEND

- PROPERTY BOUNDARY
- PROPOSED RIGHT OF WAY
- EXISTING MAJOR CONTOUR
- EXISTING MINOR CONTOUR
- PROPOSED MAJOR CONTOUR
- PROPOSED MINOR CONTOUR
- WASTEWATER LINE
- WASTEWATER MANHOLE
- DIRECTION OF FLOW
- DOUBLE WASTEWATER SERVICE
- SINGLE WASTEWATER SERVICE
- DOUBLE WATER SERVICE
- SINGLE WATER SERVICE

* ALL WASTEWATER SYMBOLS ARE NOT TO SCALE, AND ARE ONLY SHOWN FOR ILLUSTRATION PURPOSES. REFER TO DETAILS SHOWN IN THIS PLAN SET.

NOTE:

1. ALL MANHOLES SHALL BE COATED WITH RAVEN 405, OR APPROVED EQUAL, WITH A UNIFORM THICKNESS OF 124 MILS AND A MINIMUM THICKNESS OF 100 MILS, APPLIED AFTER MANHOLES HAVE PASSED THE VACUUM TEST (CITY STANDARD WW-03).
2. TOPS OF MANHOLES UNDER PAVEMENT SHALL BE ADJUSTED TO MATCH FINISH GRADES PRIOR TO ACCEPTANCE OF WORK.
3. CORE EXISTING MANHOLE, INSERT GASKET AND PROVIDE PRECO GROUT SEAL INSIDE AND OUR, OR APPROVED EQUAL.
4. ALL WASTEWATER LINES SHALL BE PVC SDR-26 CONFORMING TO ASTM D3034 WITH MINIMUM PIPE STIFFNESS OF 115 PSI AS DETERMINED BY ASTM D2412.
5. AT ALL WATERLINE CROSSINGS, WASTEWATER MAIN SHALL BE ASTM 2241, SDR-26CLASS 160 OR BETTER PVC FOR MINIMUM 20 FEET CENTERED ON THE WATERLINE.
6. CONTRACTOR SHALL MAINTAIN A MINIMUM SEPARATION DISTANCE IN ALL DIRECTIONS OF NINE FEET BETWEEN PROPOSED WATERLINE AND WASTEWATER COLLECTION FACILITIES INCLUDING MANHOLES. IF THIS DISTANCE CANNOT BE MAINTAINED, CONTRACTOR MUST IMMEDIATELY NOTIFY PROJECT ENGINEER FOR FURTHER DIRECTION.
7. ALL GRAVITY LINES ARE TO BE INSTALLED FROM DOWNSTREAM TO UPSTREAM.
8. TRACER TAPE SHALL BE PLACED ABOVE ALL PLASTIC PIPES.
9. WHERE WATER LINE CROSSES UNDER WASTEWATER LINES, THE WATER LINE SHALL BE ENCASED IN AN 18 FOOT MINIMUM LENGTH STEEL ENCASEMENT PIPE CENTERED ON THE WATER LINE AND SHALL BE AT LEAST TWO NOMINAL PIPE DIAMETERS LARGER THAN THE WATER LINE PER TAC PART 1. CHAPTER 290, SUBCHAPTER D, RULE 290.44 AND THE CITY OF HUTTO DETAIL W-14.

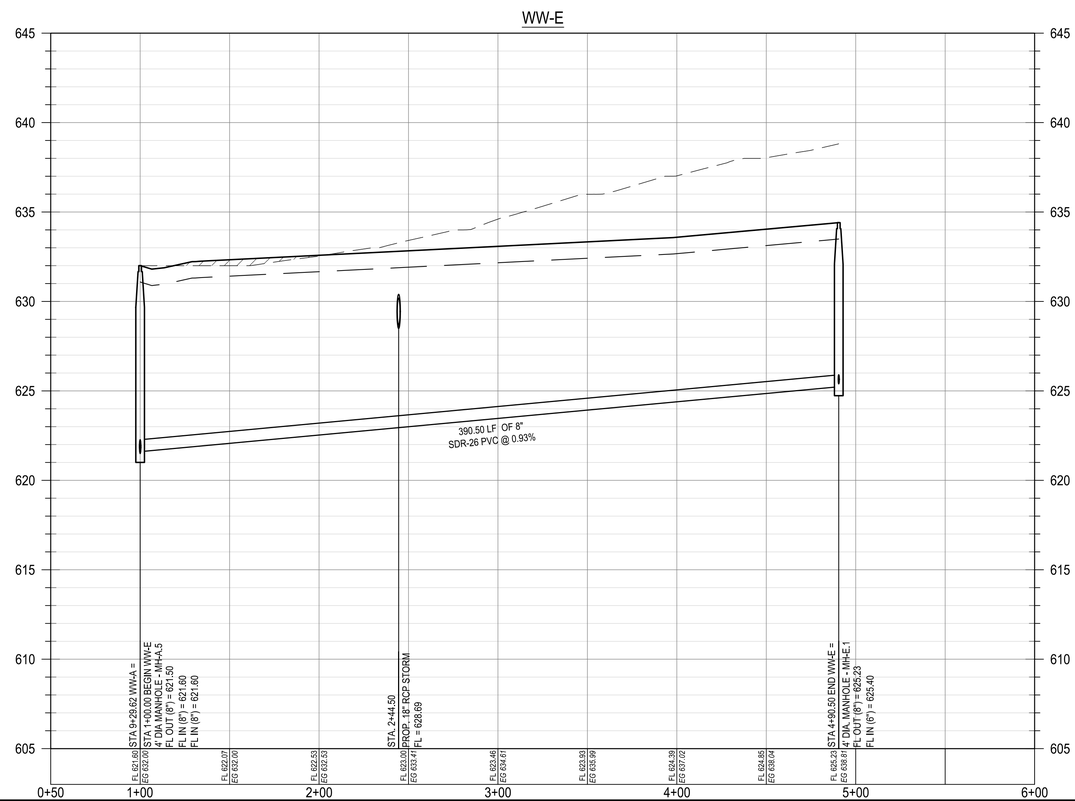

PROFILE LEGEND

- FINISHED GRADE
- PROPOSED SUBGRADE
- EXISTING GRADE
- PROPOSED WASTEWATER LINE
- PROPOSED WASTEWATER MANHOLE

REV	DESCRIPTION	DATE	APR

DESIGNED BY: DAZ
REVIEWED BY: TMH
DRAWN BY: DAZ

BGE, INC.
1701 DIRECTORS BOULEVARD, SUITE 1000
AUSTIN, TX 78744
TBPE Registration No. F-1046
TEL: 512-879-0400 www.bgeinc.com

COTTONWOOD CREEK, PHASE II
HUTTO, TEXAS

WW-E PLAN AND PROFILE (1+00 TO END)

SUBMITTAL DATE: 03-15-2021

STATE OF TEXAS
TIMOTHY M. HOLLIS
94848
LICENSED
PROFESSIONAL ENGINEER
07/08/2021

SHEET
31 OF 54

Record Drawing

G:\TXC\Projects\Lennar\8390-00-Cottonwood_PH2\LDV01_CADD\01_Sits\C-SP-SS\WR-P&P-PH-2.dwg Layout: WW-E PLAN AND PROFILE (1+00 TO END) Plotted: 7/7/2021 4:48:50 PM

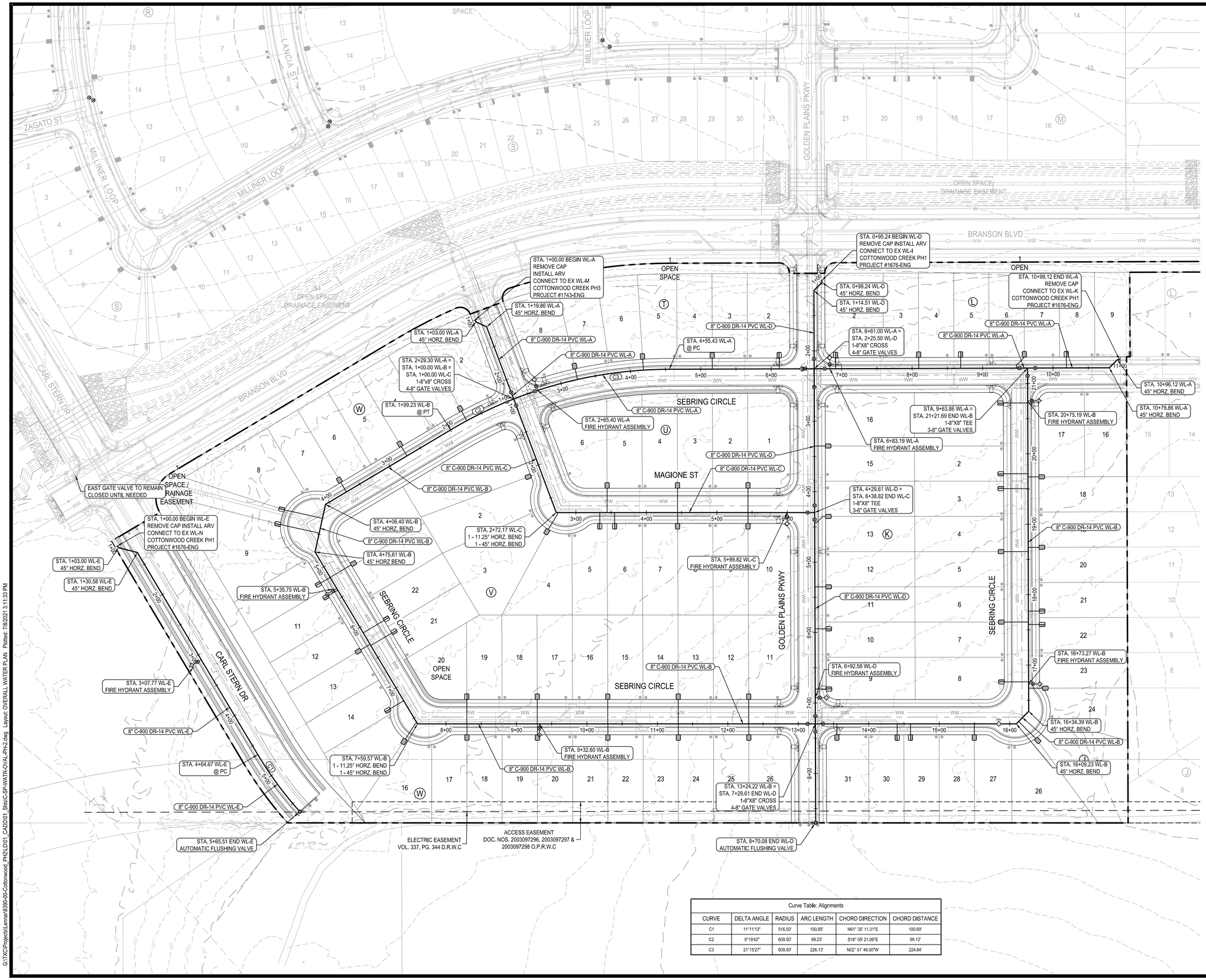

0 30' 60' 120'
SCALE: 1" = 60'

LEGEND

- PROPERTY BOUNDARY
- PROPOSED RIGHT OF WAY
- EXISTING MAJOR CONTOUR
- EXISTING MINOR CONTOUR
- FIRE HYDRANT ASSEMBLY
- GATE VALVE
- CAP
- 2" IRRIGATION SERVICE
- DOUBLE WATER SERVICE
- SINGLE WATER SERVICE
- DOUBLE WASTEWATER SERVICE
- SINGLE WASTEWATER SERVICE
- 1 - 4" SLEEVE / 1 - 6" SLEEVE
- ARV — AIR RELEASE VALVE

* ALL WATER SYMBOLS ARE NOT TO SCALE AND ARE ONLY SHOWN FOR ILLUSTRATION PURPOSES.
* CONTRACTOR TO PLACE GATE VALVES, FIRE HYDRANTS AND ARV'S OUTSIDE OF CONCRETE VALLEY GUTTER AND CURBS.

Curve Table: Alignments

CURVE	DELTA ANGLE	RADIUS	ARC LENGTH	CHORD DIRECTION	CHORD DISTANCE
C1	11°11'13"	516.50'	100.85'	N61° 35' 11.31"E	100.69'
C2	9°19'42"	609.50'	99.23'	S18° 09' 21.06"E	99.12'
C3	21°15'27"	609.50'	226.13'	N02° 51' 46.50"W	224.84'

REV	DESCRIPTION	DATE	APR

DESIGNED BY: DAZ
REVIEWED BY: TMH
DRAWN BY: DAZ

BGE, INC.
1701 DIRECTORS BOULEVARD, SUITE 1000
AUSTIN, TX 78744
TBPE Registration No. F-1046
TEL: 512-879-0400 www.browngay.com

COTTONWOOD CREEK, PHASE II
HUTTO, TEXAS

OVERALL WATER PLAN

SUBMITTAL DATE: 03-15-2021

STATE OF TEXAS
TIMOTHY M. HOLLAND
94848
LICENSED
PROFESSIONAL ENGINEER
07/08/2021

SHEET
32 OF 54

Record Drawing

G:\TXC\Projects\Lennar\8390-00-Cottonwood_PH2\LDV01_CADD\01_Static\C-SP-WATR-OVAL-PH2.dwg Layout: OVERALL WATER PLAN Plotted: 7/8/2021 3:11:33 PM

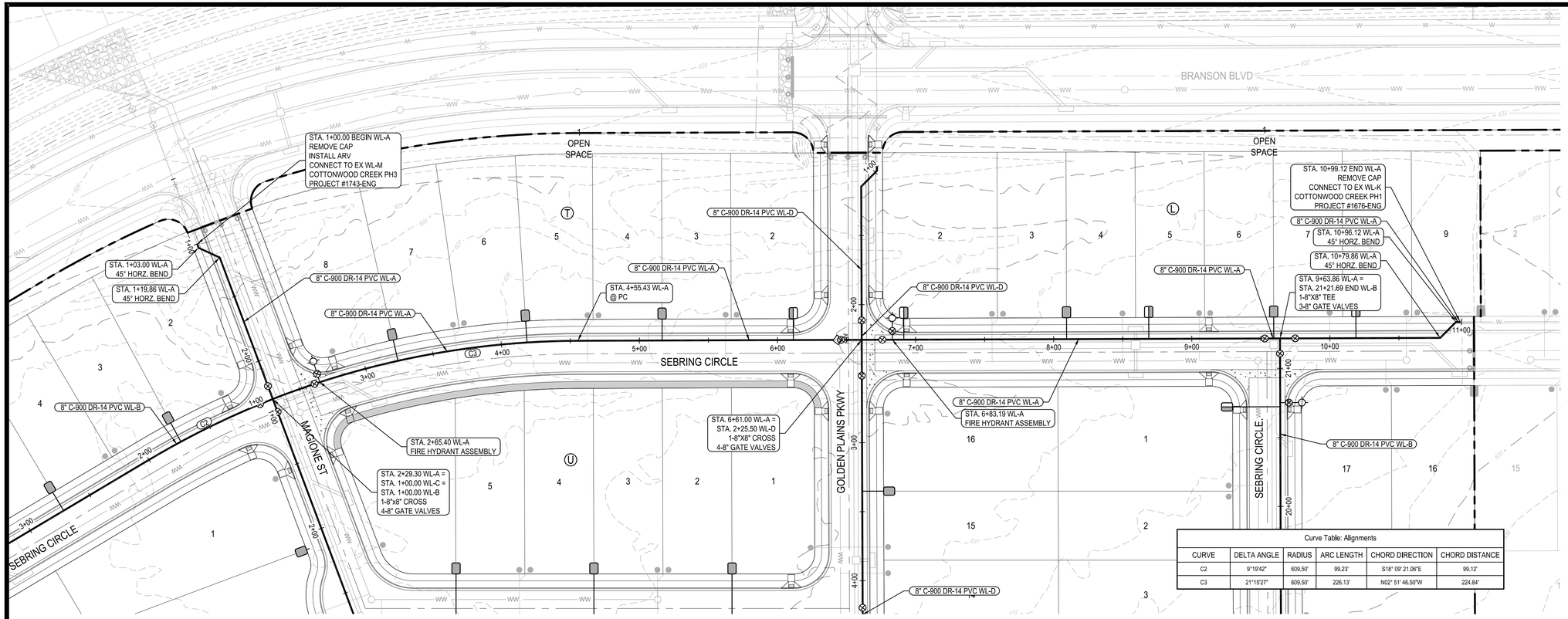

Curve Table: Alignments					
CURVE	DELTA ANGLE	RADIUS	ARC LENGTH	CHORD DIRECTION	CHORD DISTANCE
C2	9°19'42"	609.50'	99.23'	S18° 09' 21.06"E	99.12'
C3	21°15'27"	609.50'	226.13'	N02° 51' 46.50"W	224.84'

0 30' 60' 120'
SCALE: 1" = 60'

LEGEND

- PROPERTY BOUNDARY
- EXISTING MAJOR CONTOUR
- EXISTING MINOR CONTOUR
- FIRE HYDRANT ASSEMBLY
- GATE VALVE
- CAP
- WATER METER
- DOUBLE WATER SERVICE
- SINGLE WATER SERVICE
- DOUBLE WASTEWATER SERVICE
- SINGLE WASTEWATER SERVICE

* ALL WATER SYMBOLS ARE NOT TO SCALE AND ARE ONLY SHOWN FOR ILLUSTRATION PURPOSES.
* CONTRACTOR TO PLACE GATE VALVES, FIRE HYDRANTS AND ARV'S OUTSIDE OF CONCRETE VALLEY GUTTER AND CURBS.

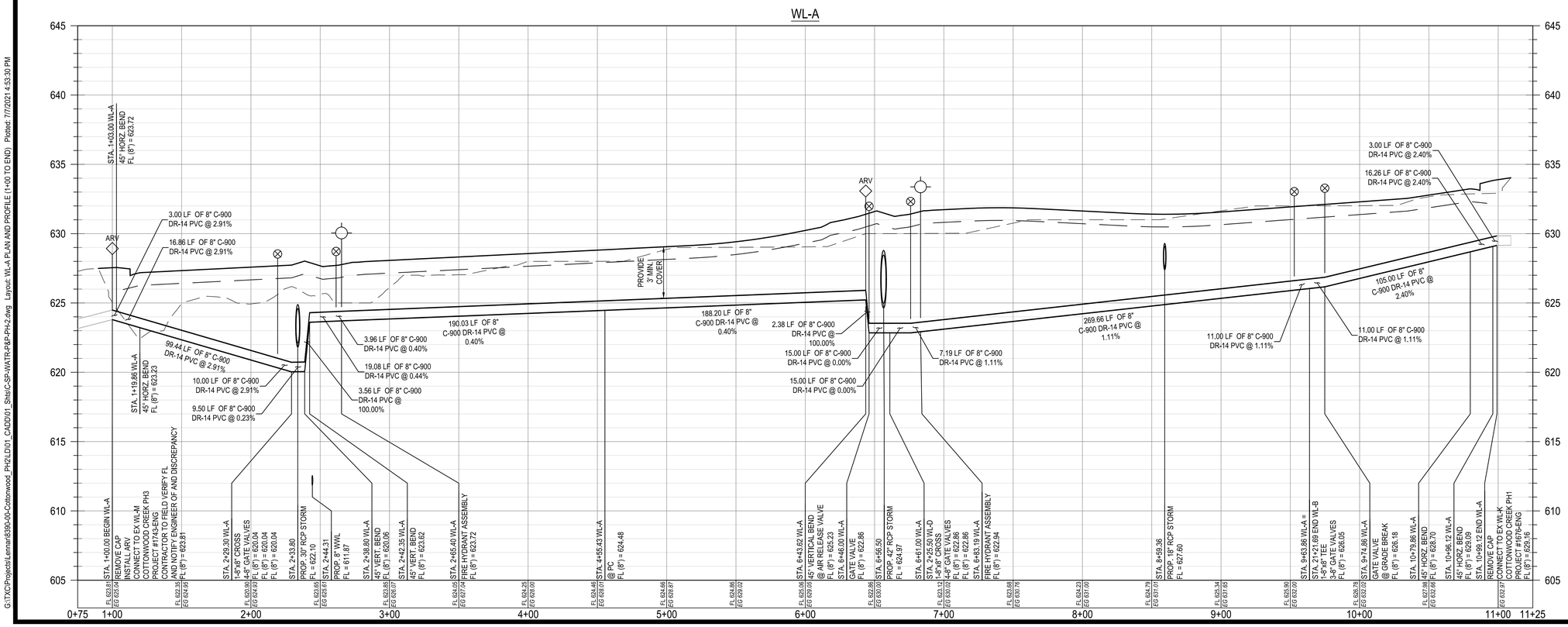

PROFILE LEGEND

- FINISHED GRADE
- SUBGRADE
- EXISTING GRADE
- PROPOSED WATER LINE
- FIRE HYDRANT
- GATE VALVE
- WATER METER
- AIR RELEASE VALVE
- WATER CAP

* ALL WATER SYMBOLS ARE NOT TO SCALE AND ARE ONLY SHOWN FOR ILLUSTRATION PURPOSES.

REV	DESCRIPTION	DATE	APR

DESIGNED BY: DAZ
REVIEWED BY: TMH
DRAWN BY: DAZ

BGE, INC.
1701 DIRECTORS BOULEVARD, SUITE 1000
AUSTIN, TX 78744
TBPE Registration No. F-1046
TEL: 512-879-0400 www.bgeinc.com

COTTONWOOD CREEK, PHASE II
HUTTO, TEXAS

WL-A PLAN AND PROFILE (1+00 TO END)

SUBMITTAL DATE: 03-15-2021

TIMOTHY M. HOLLIMON
94548
LICENSED
PROFESSIONAL ENGINEER
07/08/2021

SHEET
33 OF 54

Record Drawing

G:\TXCI\Projects\Lennar\8399-00-Cottonwood_PH2\LD\01_CAD\01_Shts\C-SP-WATR-P&P-PH-2.dwg Layout: WL-A PLAN AND PROFILE (1+00 TO END) Plotted: 7/7/2021 4:53:30 PM

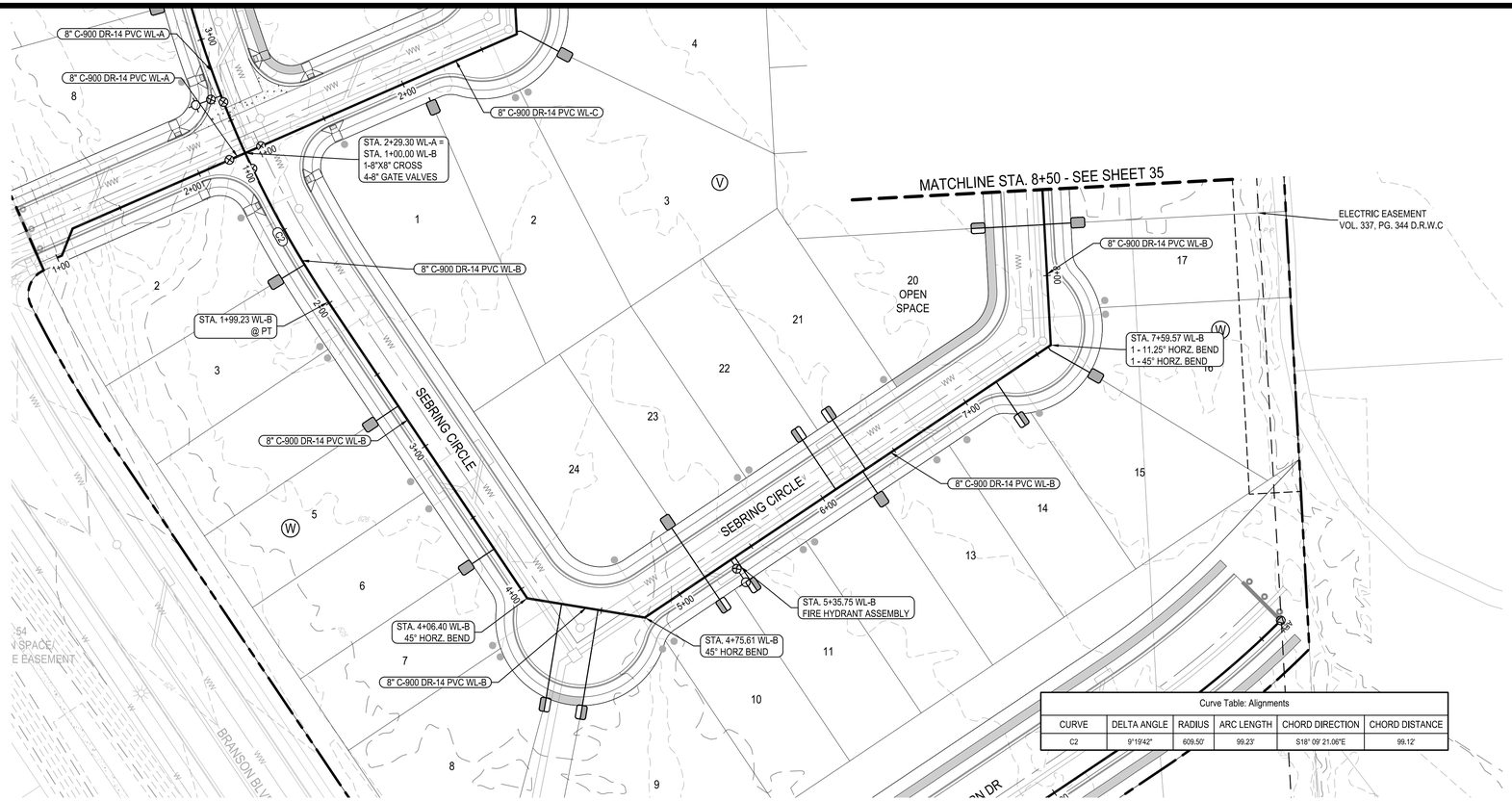

Curve Table: Alignments

CURVE	DELTA ANGLE	RADIUS	ARC LENGTH	CHORD DIRECTION	CHORD DISTANCE
C2	9°19'42"	609.50'	99.23'	S18° 09' 21.06"E	99.12'

0 30' 60' 120'
SCALE: 1" = 60'

LEGEND

- PROPERTY BOUNDARY
- EXISTING MAJOR CONTOUR
- EXISTING MINOR CONTOUR
- FIRE HYDRANT ASSEMBLY
- GATE VALVE
- CAP
- WATER METER
- DOUBLE WATER SERVICE
- SINGLE WATER SERVICE
- DOUBLE WASTEWATER SERVICE
- SINGLE WASTEWATER SERVICE

* ALL WATER SYMBOLS ARE NOT TO SCALE AND ARE ONLY SHOWN FOR ILLUSTRATION PURPOSES.
* CONTRACTOR TO PLACE GATE VALVES, FIRE HYDRANTS AND ARV'S OUTSIDE OF CONCRETE VALLEY GUTTER AND CURBS.

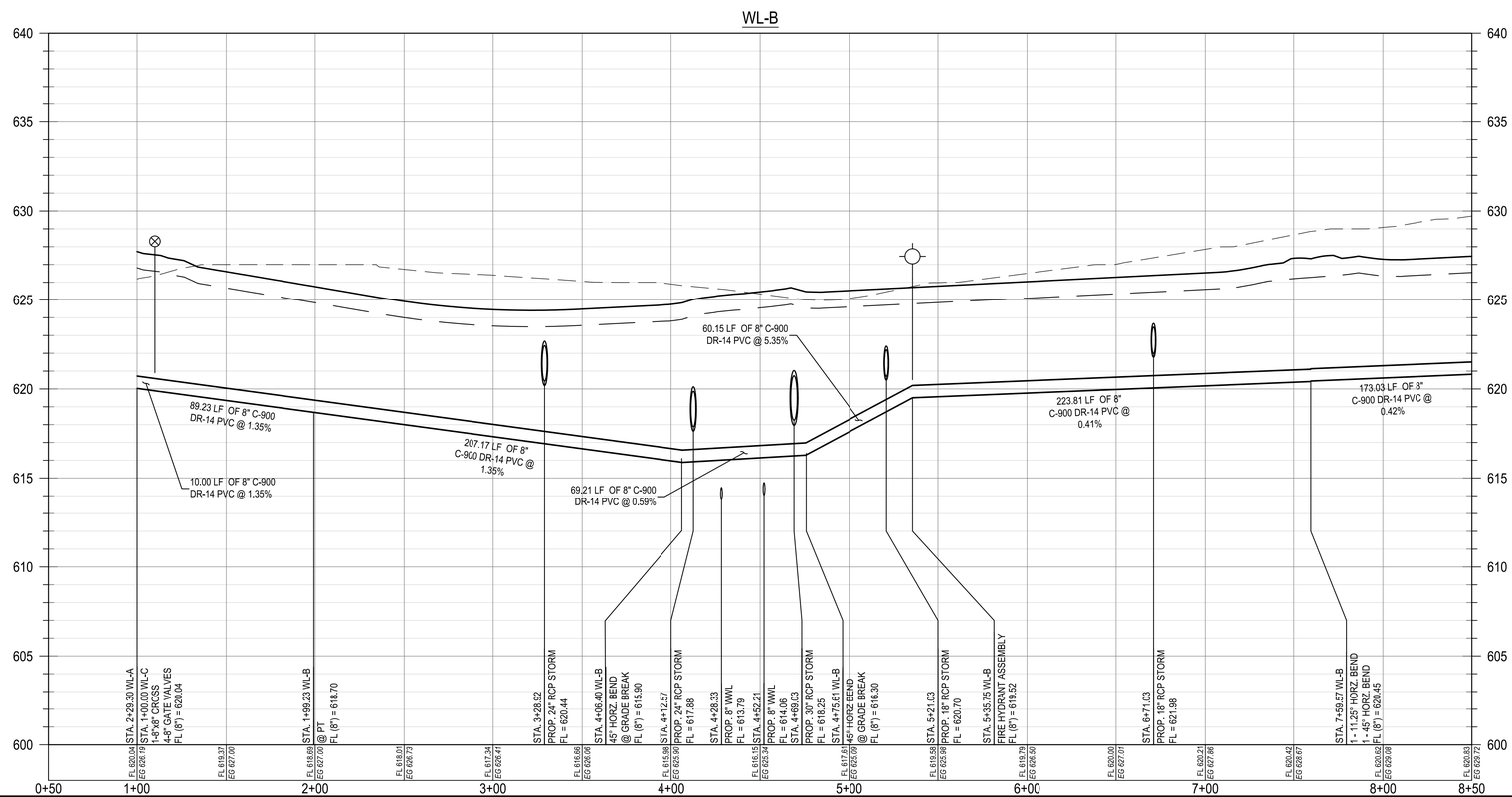

PROFILE LEGEND

- FINISHED GRADE
- SUBGRADE
- EXISTING GRADE
- PROPOSED WATER LINE
- FIRE HYDRANT
- GATE VALVE
- WATER METER
- AIR RELEASE VALVE
- WATER CAP

* ALL WATER SYMBOLS ARE NOT TO SCALE AND ARE ONLY SHOWN FOR ILLUSTRATION PURPOSES.

REV	DESCRIPTION	DATE	APR

DESIGNED BY: DAZ
REVIEWED BY: TMH
DRAWN BY: DAZ

BGE, INC.
1701 DIRECTORS BOULEVARD, SUITE 1000
AUSTIN, TX 78744
TBPE Registration No. F-1046
TEL: 512-879-0400 www.browngay.com

COTTONWOOD CREEK, PHASE II
HUTTO, TEXAS

WL-B PLAN AND PROFILE
(1+00 TO 8+50)

SUBMITTAL DATE: 03-15-2021

STATE OF TEXAS
TIMOTHY M. HOLLAND
94848
LICENSED
PROFESSIONAL ENGINEER
01/08/2021

SHEET
34 OF 54

Record Drawing

G:\TXC\Projects\Lennar\8390-00-Cottonwood_PH2\LD\01_CADD\01_Shts\C-SP-WATR-P&P-PH-2.dwg Layout: WL-B PLAN AND PROFILE (1+00 TO 8+50) Plotted: 7/7/2021 4:54:00 PM

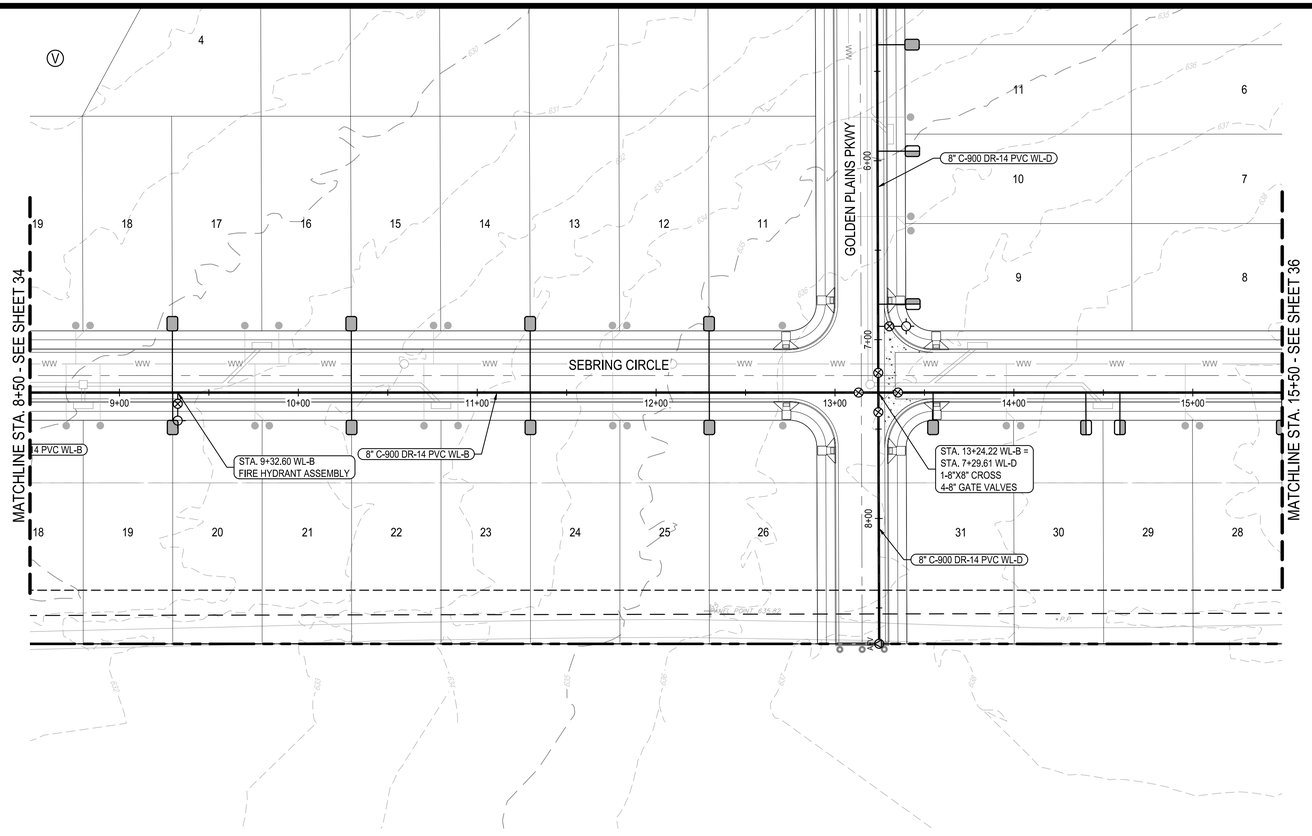

0 30' 60' 120'
SCALE: 1" = 60'

LEGEND

- PROPERTY BOUNDARY
- EXISTING MAJOR CONTOUR
- EXISTING MINOR CONTOUR
- FIRE HYDRANT ASSEMBLY
- GATE VALVE
- CAP
- WATER METER
- DOUBLE WATER SERVICE
- SINGLE WATER SERVICE
- DOUBLE WASTEWATER SERVICE
- SINGLE WASTEWATER SERVICE

* ALL WATER SYMBOLS ARE NOT TO SCALE AND ARE ONLY SHOWN FOR ILLUSTRATION PURPOSES.
* CONTRACTOR TO PLACE GATE VALVES, FIRE HYDRANTS AND ARV'S OUTSIDE OF CONCRETE VALLEY GUTTER AND CURBS.

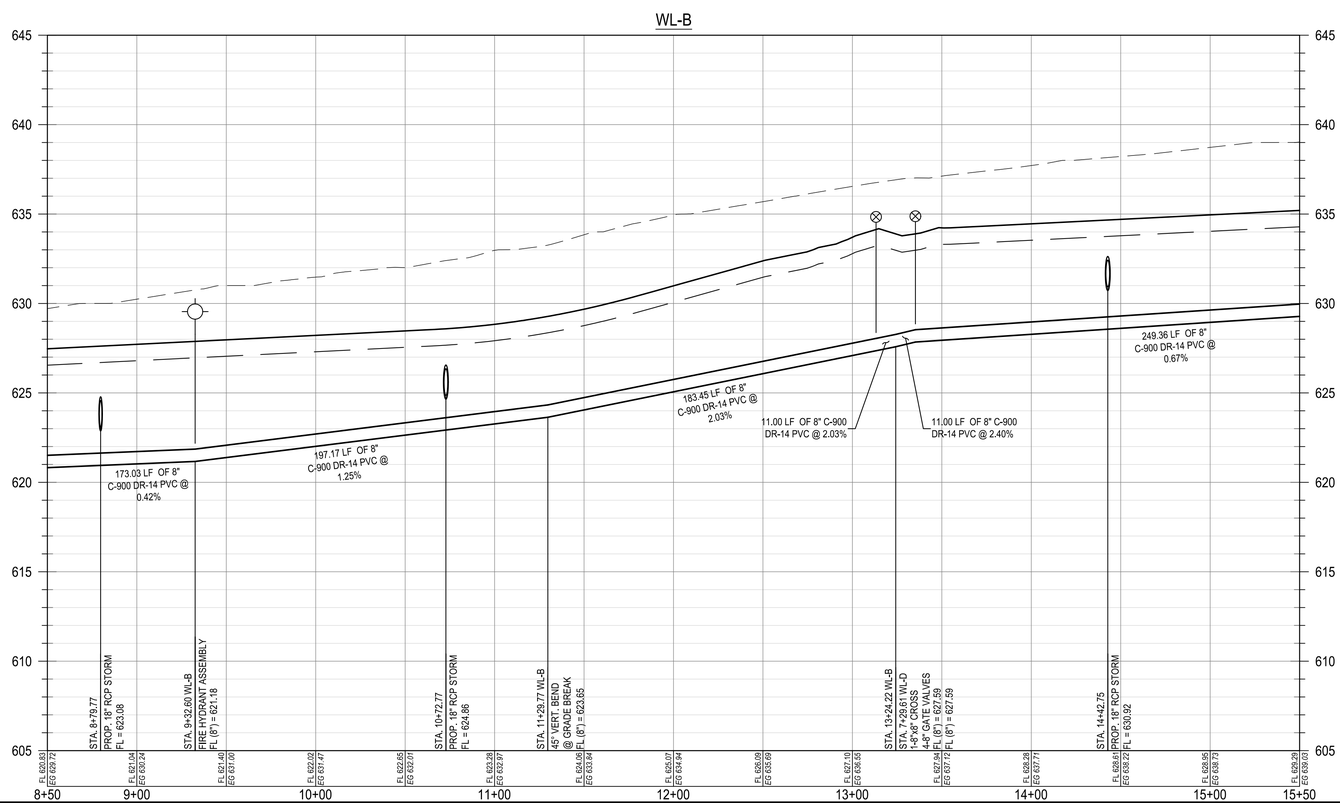

PROFILE LEGEND

- FINISHED GRADE
- SUBGRADE
- EXISTING GRADE
- PROPOSED WATER LINE
- FIRE HYDRANT
- GATE VALVE
- WATER METER
- AIR RELEASE VALVE
- WATER CAP

* ALL WATER SYMBOLS ARE NOT TO SCALE AND ARE ONLY SHOWN FOR ILLUSTRATION PURPOSES.

REV	DESCRIPTION	DATE	APR

DESIGNED BY: DAZ
REVIEWED BY: TMH
DRAWN BY: DAZ

BGE, INC.
1701 DIRECTORS BOULEVARD, SUITE 1000
AUSTIN, TX 78744
TBPE Registration No. F-1046
TEL: 512-879-0400 www.browngay.com

COTTONWOOD CREEK, PHASE II
HUTTO, TEXAS

WL-B PLAN AND PROFILE (8+50 TO 15+50)

SUBMITTAL DATE: 03-15-2021

STATE OF TEXAS
TIMOTHY M. HOLLAND
94848
LICENSED
PROFESSIONAL ENGINEER
03/08/2021

SHEET
35 OF 54

G:\TXC\Projects\Lennar\8390-00-Cottonwood_PH2\LD\01_CADD\01_Shts\C-SP-WATR-P&P-PH-2.dwg Layout: WL-B PLAN AND PROFILE (8+50 TO 15+50) Plotted: 7/7/2021 4:54:27 PM

Record Drawing

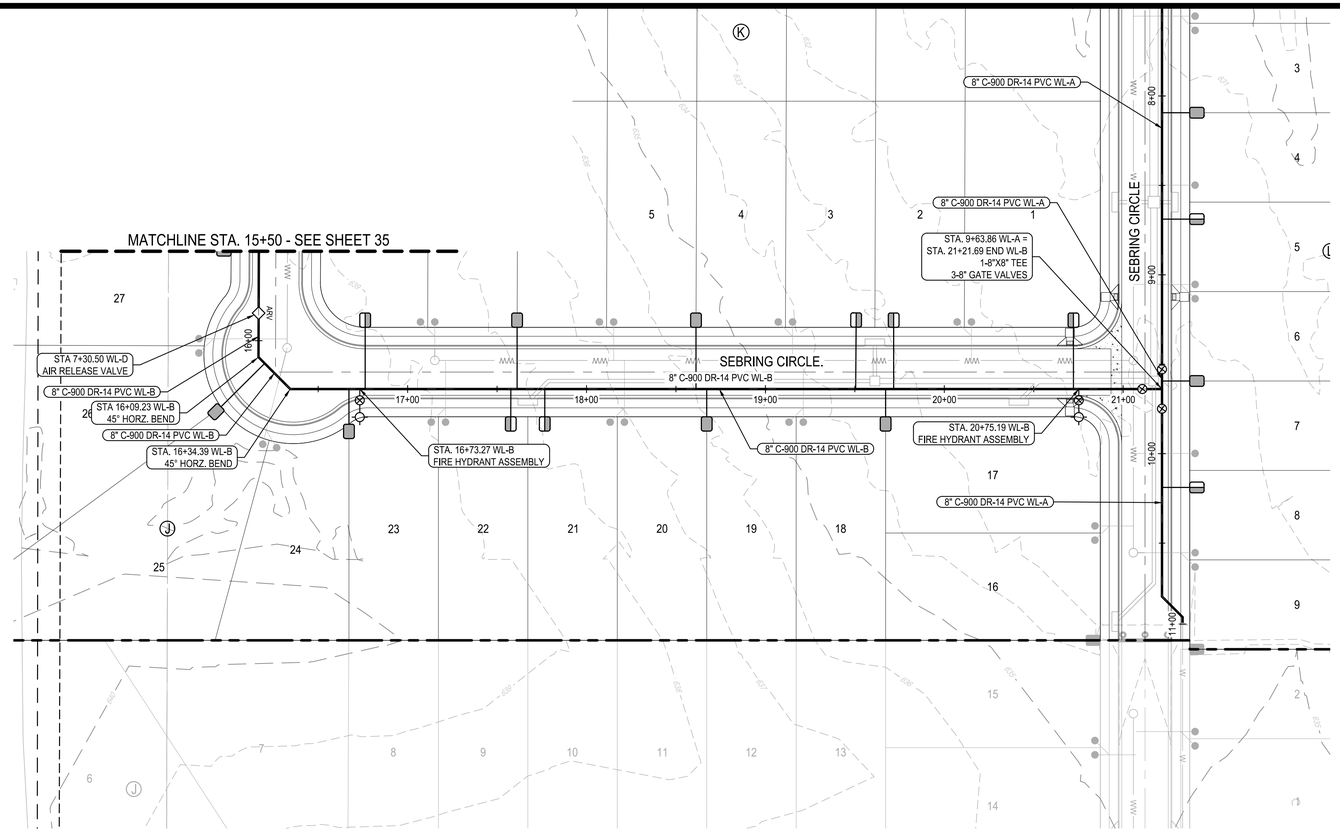

0 30' 60' 120'
SCALE: 1" = 60'

LEGEND

- PROPERTY BOUNDARY
- EXISTING MAJOR CONTOUR
- EXISTING MINOR CONTOUR
- FIRE HYDRANT ASSEMBLY
- GATE VALVE
- CAP
- WATER METER
- DOUBLE WATER SERVICE
- SINGLE WATER SERVICE
- DOUBLE WASTEWATER SERVICE
- SINGLE WASTEWATER SERVICE

* ALL WATER SYMBOLS ARE NOT TO SCALE AND ARE ONLY SHOWN FOR ILLUSTRATION PURPOSES.
* CONTRACTOR TO PLACE GATE VALVES, FIRE HYDRANTS AND ARV'S OUTSIDE OF CONCRETE VALLEY GUTTER AND CURBS.

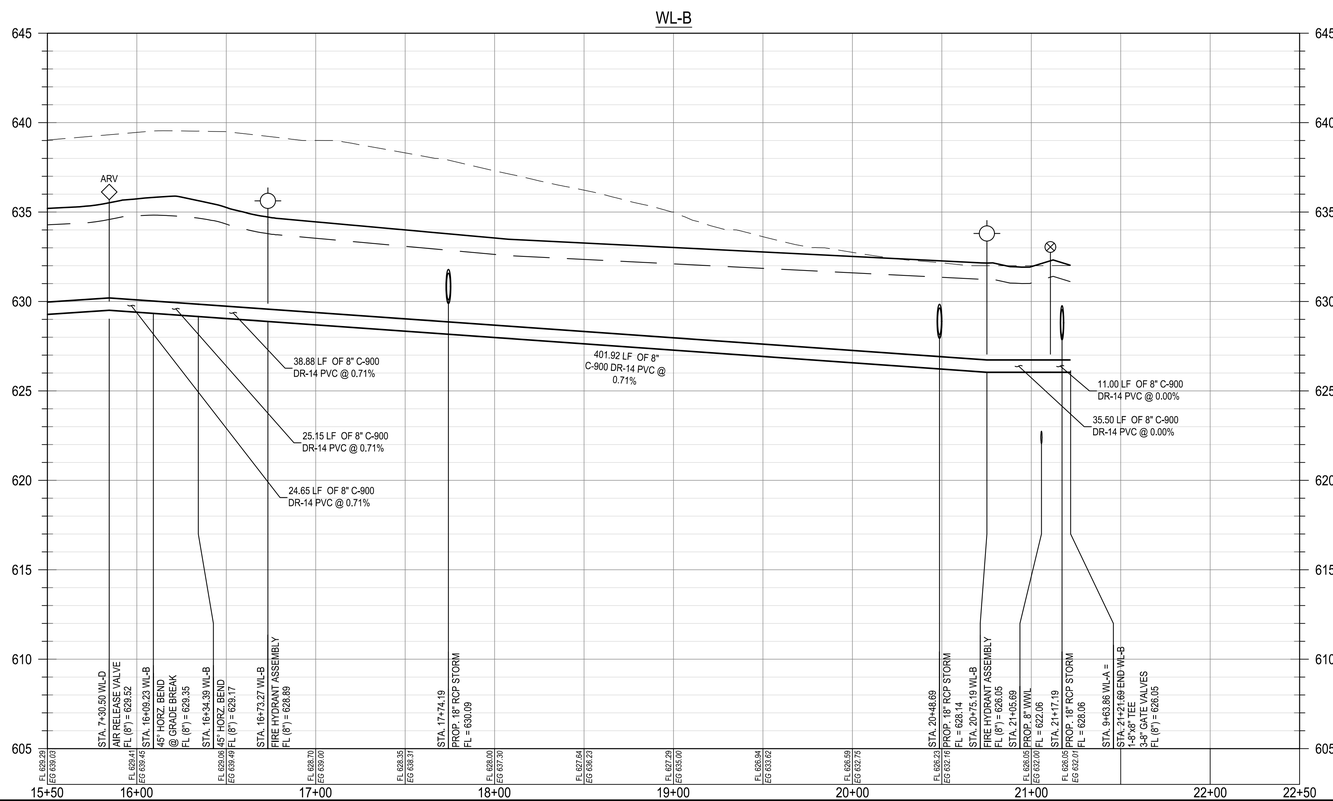

PROFILE LEGEND

- FINISHED GRADE
- SUBGRADE
- EXISTING GRADE
- PROPOSED WATER LINE
- FIRE HYDRANT
- GATE VALVE
- WATER METER
- AIR RELEASE VALVE
- WATER CAP

* ALL WATER SYMBOLS ARE NOT TO SCALE AND ARE ONLY SHOWN FOR ILLUSTRATION PURPOSES.

REV	DESCRIPTION	DATE	APR

DESIGNED BY: DAZ
REVIEWED BY: TMH
DRAWN BY: DAZ

BGE, INC.
1701 DIRECTORS BOULEVARD, SUITE 1000
AUSTIN, TX 78744
TBPE Registration No. F-1046
TEL: 512-879-0400 www.bowngay.com

COTTONWOOD CREEK, PHASE II
HUTTO, TEXAS

WL-B PLAN AND PROFILE (15+50 TO END)

SUBMITTAL DATE: 03-15-2021

STATE OF TEXAS
TIMOTHY M. HOLLAND
94848
LICENSED
PROFESSIONAL ENGINEER
01/08/2021

SHEET
36 OF 54

Record Drawing

G:\TXC\Projects\Lennar\8390-00-Cottonwood_PH2\LD\01_CADD\01_Shts\C-SP-WATR-P&P-PH-2.dwg Layout: WL-B PLAN AND PROFILE (15+50 TO END) Plotted: 7/7/2021 4:54:55 PM

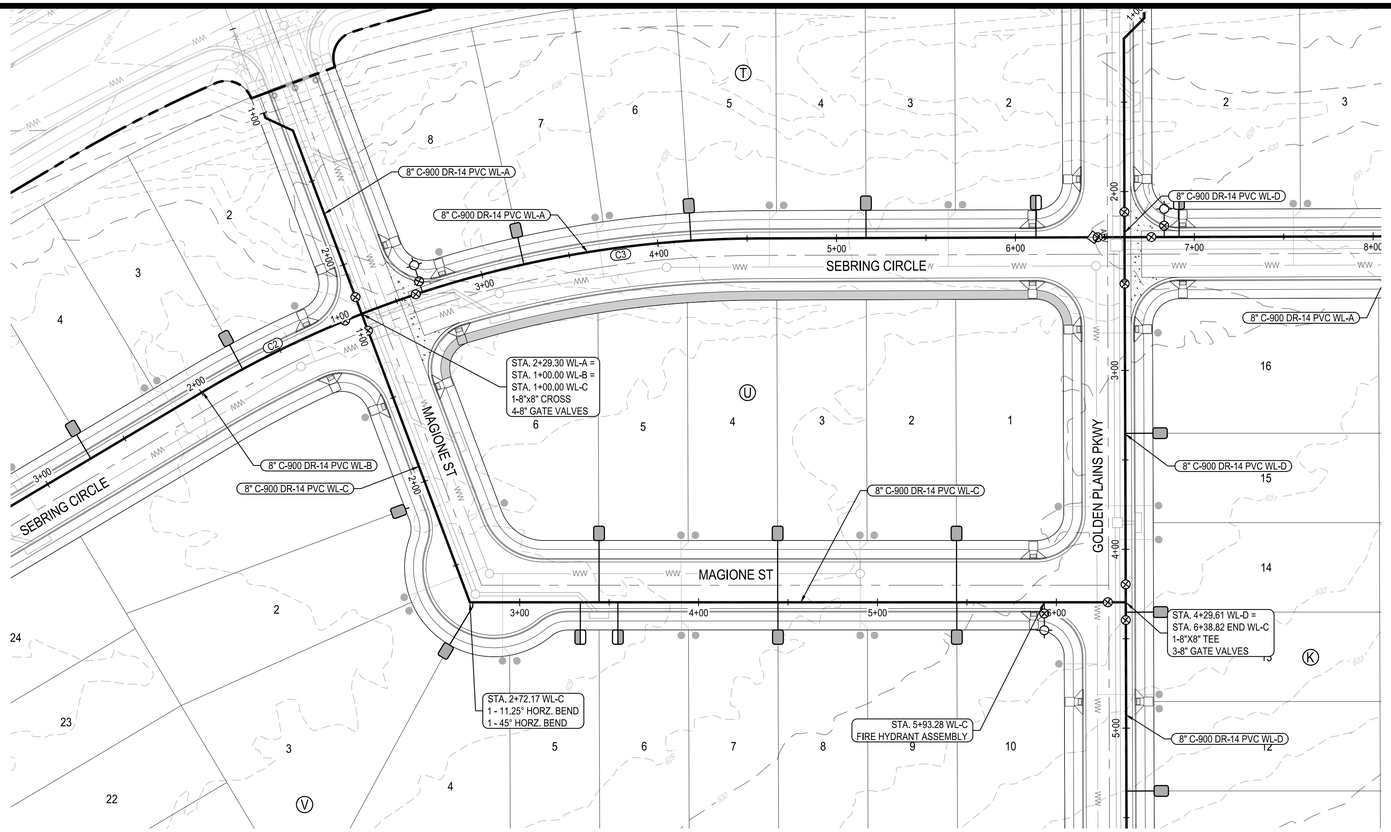

0 30' 60' 120'
SCALE: 1" = 60'

LEGEND

- PROPERTY BOUNDARY
- EXISTING MAJOR CONTOUR
- EXISTING MINOR CONTOUR
- FIRE HYDRANT ASSEMBLY
- GATE VALVE
- CAP
- WATER METER
- DOUBLE WATER SERVICE
- SINGLE WATER SERVICE
- DOUBLE WASTEWATER SERVICE
- SINGLE WASTEWATER SERVICE

* ALL WATER SYMBOLS ARE NOT TO SCALE AND ARE ONLY SHOWN FOR ILLUSTRATION PURPOSES.
* CONTRACTOR TO PLACE GATE VALVES, FIRE HYDRANTS AND ARV'S OUTSIDE OF CONCRETE VALLEY GUTTER AND CURBS.

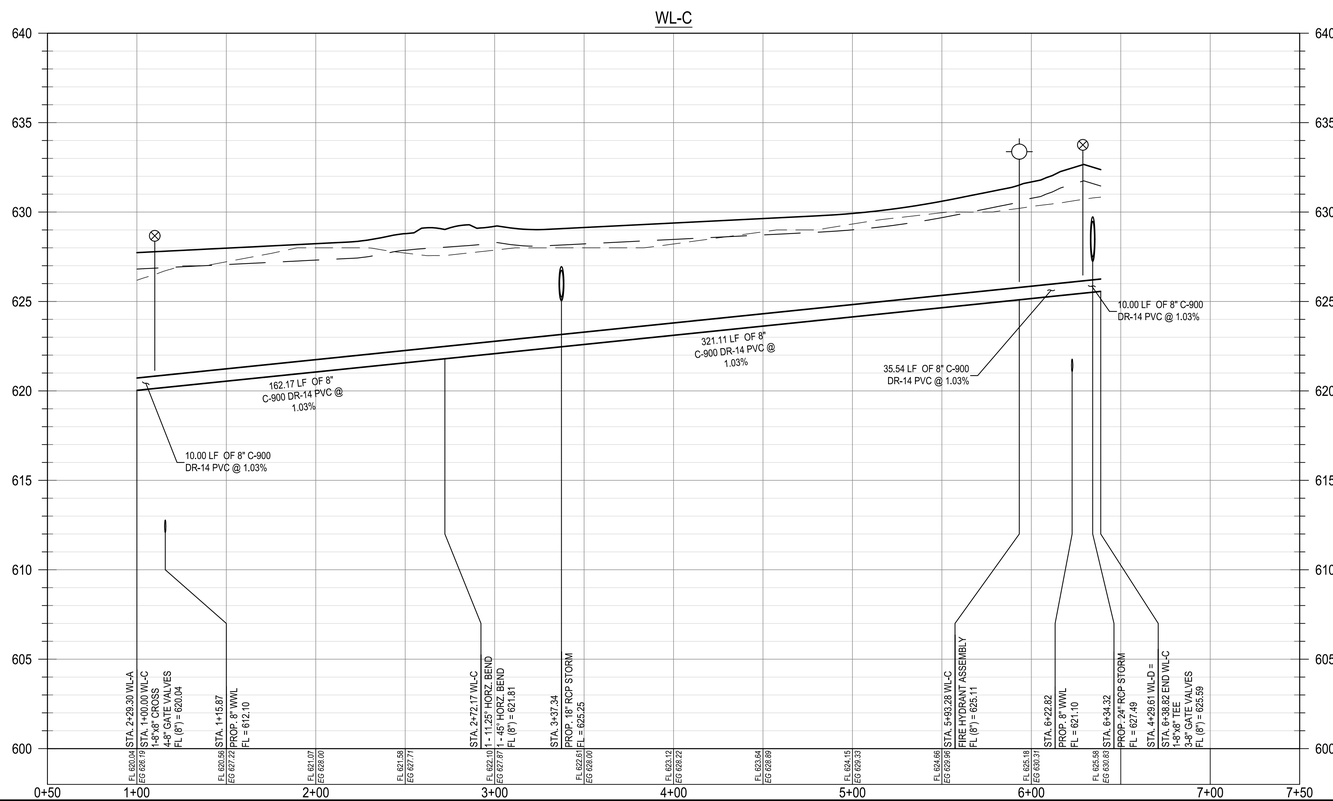

PROFILE LEGEND

- FINISHED GRADE
- SUBGRADE
- EXISTING GRADE
- PROPOSED WATER LINE
- FIRE HYDRANT
- GATE VALVE
- WATER METER
- ARV — AIR RELEASE VALVE
- WATER CAP

* ALL WATER SYMBOLS ARE NOT TO SCALE AND ARE ONLY SHOWN FOR ILLUSTRATION PURPOSES.

REV	DATE	DESCRIPTION	APR

DESIGNED BY: DAZ
REVIEWED BY: TMH
DRAWN BY: DAZ

BGE, INC.
1701 DIRECTORS BOULEVARD, SUITE 1000
AUSTIN, TX 78744
TBPE Registration No. F-1046
TEL: 512-879-0400 www.bgeinc.com

COTTONWOOD CREEK, PHASE II
HUTTO, TEXAS

WL-C PLAN AND PROFILE (1+00 TO END)

SUBMITTAL DATE: 03-15-2021

STATE OF TEXAS — TIMOTHY M. HOLLAND — 94848 — LICENSED PROFESSIONAL ENGINEER — 03/08/2021

SHEET 37 OF 54

Record Drawing

G:\TXC\Projects\Lennar\8390-00-Cottonwood_PH2\LD\01_CADD\01_Shts\C-SP-WATR-P&P-PH-2.dwg Layout: WL-C PLAN AND PROFILE (1+00 TO END) Plotted: 7/7/2021 4:55:22 PM

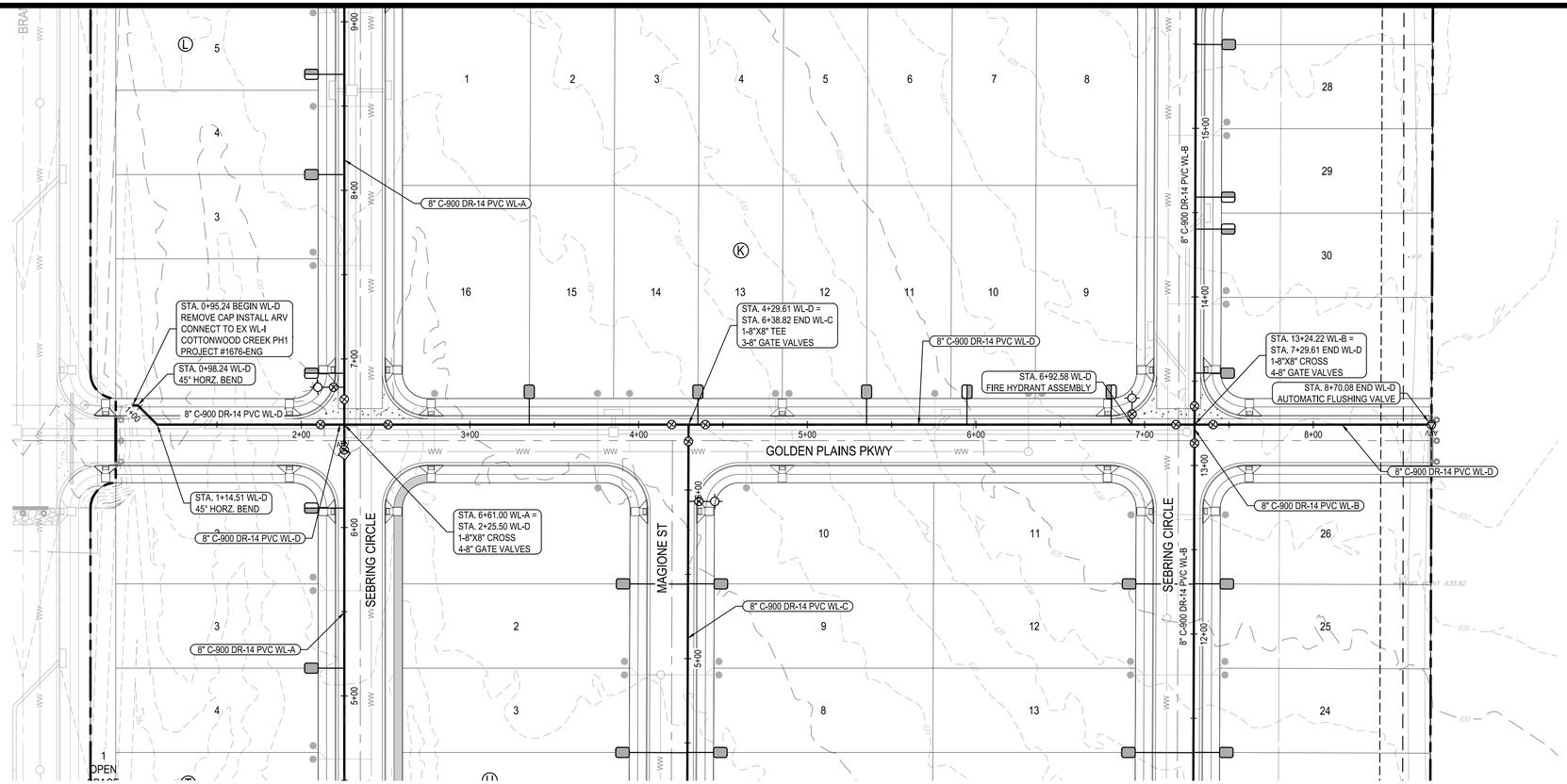

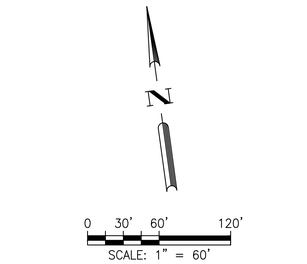

LEGEND

- PROPERTY BOUNDARY
- EXISTING MAJOR CONTOUR
- EXISTING MINOR CONTOUR
- FIRE HYDRANT ASSEMBLY
- GATE VALVE
- CAP
- WATER METER
- DOUBLE WATER SERVICE
- SINGLE WATER SERVICE
- DOUBLE WASTEWATER SERVICE
- SINGLE WASTEWATER SERVICE

* ALL WATER SYMBOLS ARE NOT TO SCALE AND ARE ONLY SHOWN FOR ILLUSTRATION PURPOSES.
* CONTRACTOR TO PLACE GATE VALVES, FIRE HYDRANTS AND ARV'S OUTSIDE OF CONCRETE VALLEY GUTTER AND CURBS.

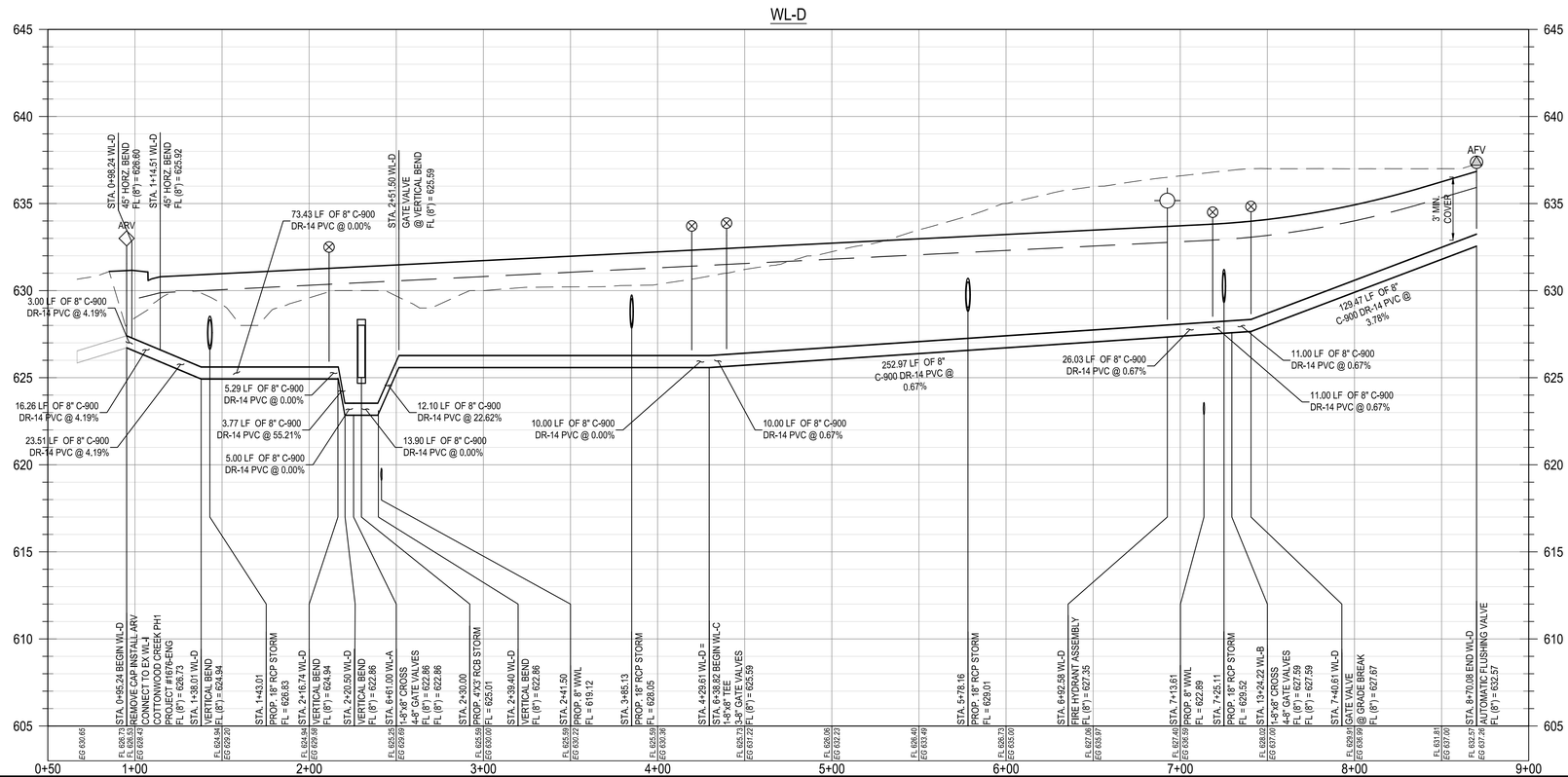

PROFILE LEGEND

- FINISHED GRADE
- SUBGRADE
- EXISTING GRADE
- PROPOSED WATER LINE
- FIRE HYDRANT
- GATE VALVE
- WATER METER
- AIR RELEASE VALVE
- WATER CAP

* ALL WATER SYMBOLS ARE NOT TO SCALE AND ARE ONLY SHOWN FOR ILLUSTRATION PURPOSES.

REV	DESCRIPTION	DATE	APR

DESIGNED BY: DAZ
REVIEWED BY: TMH
DRAWN BY: DAZ

BGE, INC.
1701 DIRECTORS BOULEVARD, SUITE 1000
AUSTIN, TX 78744
TBPE Registration No. F-1046
TEL: 512-879-0400 www.bgeinc.com

COTTONWOOD CREEK, PHASE II
HUTTO, TEXAS
WL-D PLAN AND PROFILE (1+00 TO END)

SUBMITTAL DATE: 03-15-2021

STATE OF TEXAS
TIMOTHY M. HOLLAND
94848
LICENSED
PROFESSIONAL ENGINEER
07/08/2021

SHEET
38 OF 54

Record Drawing

G:\TXC\Projects\Lennar\8390-00-Cottonwood_PH2\LD\01_CADD\01_Sheets\C-SP-WATR-P&P-PH-2.dwg Layout: WL-D PLAN AND PROFILE (1+00 TO END) Plotted: 7/7/2021 4:55:48 PM

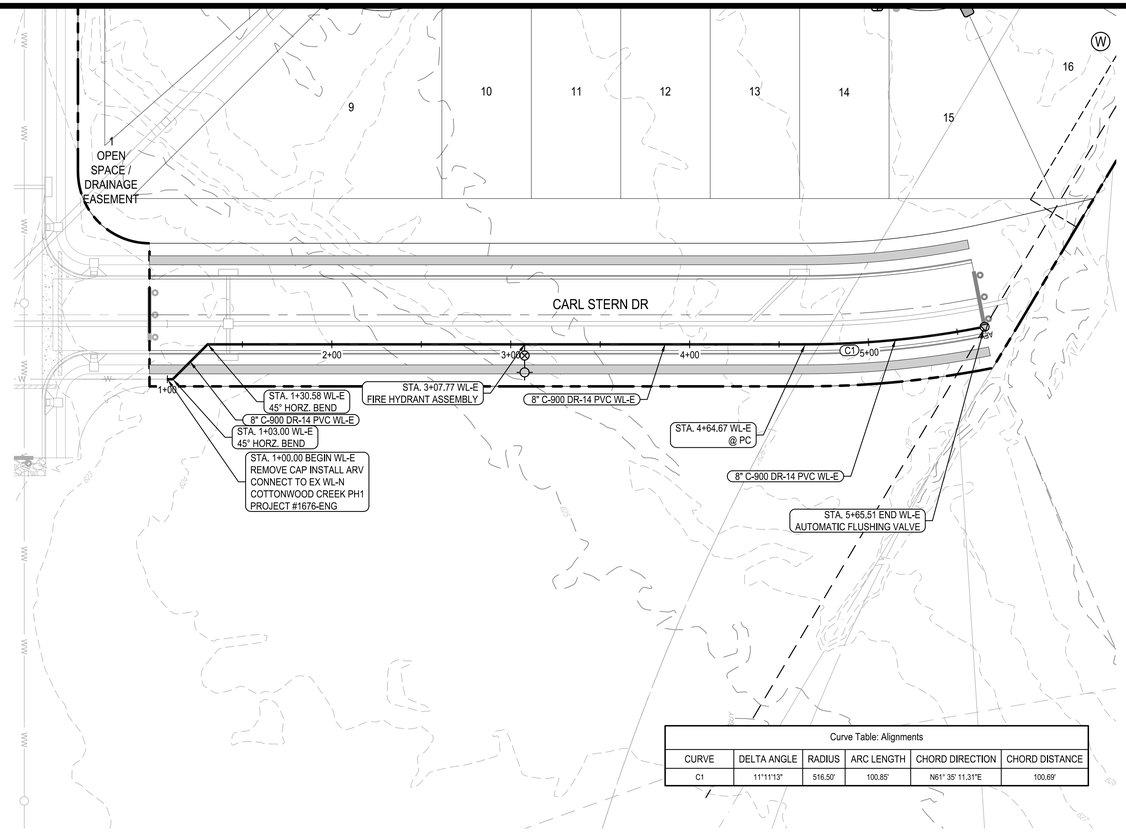

0 30' 60' 120'
SCALE: 1" = 60'

LEGEND

- PROPERTY BOUNDARY
- EXISTING MAJOR CONTOUR
- EXISTING MINOR CONTOUR
- FIRE HYDRANT ASSEMBLY
- GATE VALVE
- CAP
- WATER METER
- DOUBLE WATER SERVICE
- SINGLE WATER SERVICE
- DOUBLE WASTEWATER SERVICE
- SINGLE WASTEWATER SERVICE

* ALL WATER SYMBOLS ARE NOT TO SCALE AND ARE ONLY SHOWN FOR ILLUSTRATION PURPOSES.
* CONTRACTOR TO PLACE GATE VALVES, FIRE HYDRANTS AND ARV'S OUTSIDE OF CONCRETE VALLEY GUTTER AND CURBS.

Curve Table: Alignments

CURVE	DELTA ANGLE	RADIUS	ARC LENGTH	CHORD DIRECTION	CHORD DISTANCE
C1	11°11'13"	516.50'	100.85'	N61° 35' 11.31"E	100.69'

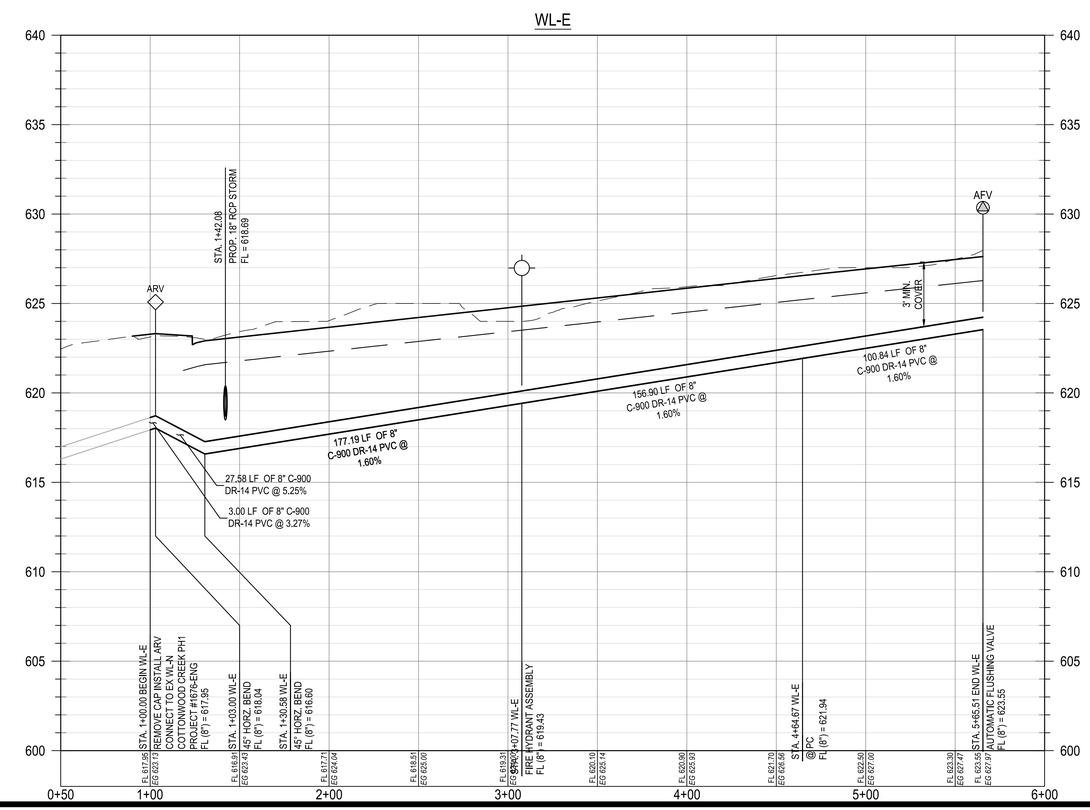

PROFILE LEGEND

- FINISHED GRADE
- SUBGRADE
- EXISTING GRADE
- PROPOSED WATER LINE
- FIRE HYDRANT
- GATE VALVE
- WATER METER
- AIR RELEASE VALVE
- WATER CAP

* ALL WATER SYMBOLS ARE NOT TO SCALE AND ARE ONLY SHOWN FOR ILLUSTRATION PURPOSES.

REV	DESCRIPTION	DATE	APR

DESIGNED BY: DAZ
REVIEWED BY: TMH
DRAWN BY: DAZ

BGE, INC.
1701 DIRECTORS BOULEVARD, SUITE 1000
AUSTIN, TX 78744
TBPE Registration No. F-1046
TEL: 512-879-0400 www.browngay.com

COTTONWOOD CREEK, PHASE II
HUTTO, TEXAS

WL-E PLAN AND PROFILE (1+00 TO END)

SUBMITTAL DATE: 03-15-2021

STATE OF TEXAS
TIMOTHY M. HOLLEMAN
94546
LICENSED
PROFESSIONAL ENGINEER
07/08/2021

SHEET
39 OF 54

Record Drawing

G:\TXC\Projects\Landmark\8390-00-Cottonwood_PH2\LD\01_CADD\01_Sht\C-SP-WATR-P&P-PH2.dwg Layout: WL-E PLAN AND PROFILE (1+00 TO END) Plotted: 7/7/2021 4:56:14 PM

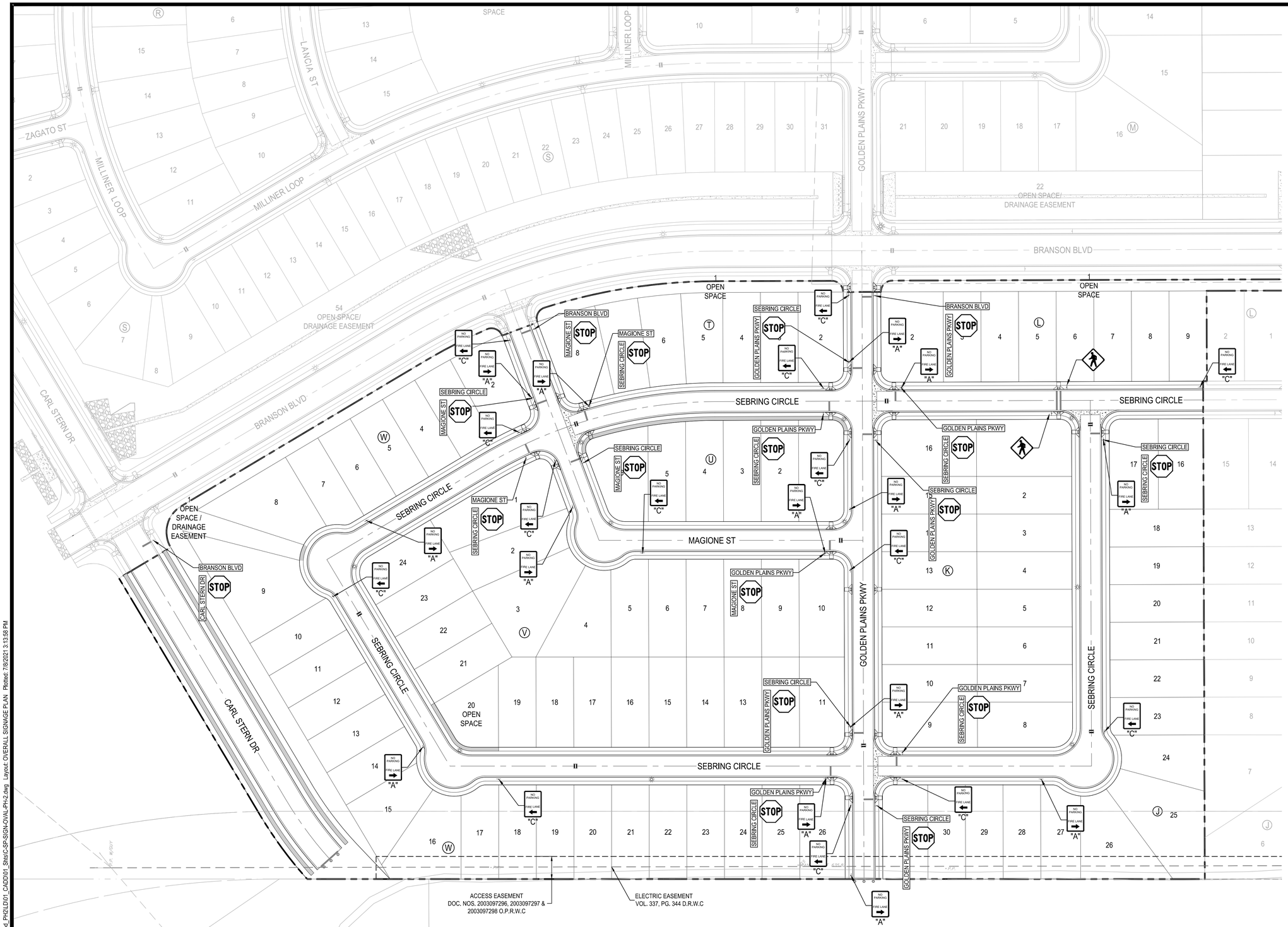

0 30' 60' 120'
SCALE: 1" = 60'

LEGEND

	PROPERTY BOUNDARY
STREET NAME / STOP R1-1 30"x30"	PROPOSED STOP SIGN W/ STREET NAME SIGNS
SPEED LIMIT 35 R2-1	PROPOSED SPEED LIMIT SIGN
W11-2	PROPOSED PEDESTRIAN CROSSING SIGN
	PROPOSED STREET END BARRICADE
	PROPOSED SIGN
	PROPOSED STOP BAR
	PROPOSED BLUE FIRE HYDRANT DELINEATOR
	STREET LIGHT (BY OTHERS)

NOTES:

1. STREET NAMES SHALL BE DISPLAYED ON STANDARD D3-1 GUIDE SIGNS ERECTED AT EACH STREET INTERSECTION AND HAVE WHITE LETTERS ON A GREEN BACKGROUND IN ACCORDANCE WITH CITY OF HUTTO STANDARDS.
2. ALL SIGNS, PAVEMENT, AND CROSSWALK MARKINGS SHALL BE IN ACCORDANCE WITH THE LATEST EDITION OF THE TEXAS MANUAL OF UNIFORM TRAFFIC DEVICES (TxMUTCD).
3. PER TxMUTCD REQUIREMENTS, THERE MUST BE A 2' MINIMUM OFFSET BETWEEN THE FACE OF CURB AND THE OUTSIDE EDGE OF SIGNS.
4. BLUE FIRE HYDRANT DELINEATORS TO BE PLACED IN OUTSIDE TRAVEL LANE, 3' FROM LIP OF GUTTER.
5. ALL CHANGES TO THE TRAFFIC CONTROL PLAN MUSH BE APPROVED AND DOCUMENTED BY THE SEALING ENGINEER. THE CONTRACTOR IS RESPONSIBLE FOR PROVIDING ANY PROPOSED CHANGES TO THE TRAFFIC CONTROL PLAN TO THE ENGINEER FOR APPROVAL.
6. THE LETTERING FOR NAMES OF STREETS ON STREET NAME SIGNS SHALL BE COMPOSED OF A COMBINATION OF LOWER-CASE LETTERS WITH INITIAL UPPER-CASE LETTERS.
7. STOP SIGNS TO BE INSTALLED PER CITY OF HUTTO DETAIL SD-03
8. TYPE III BARRICADES TO THE INSTALLED PER CITY OF GEORGETOWN DETAIL SD22.
9. ALL STOP SIGNS TO BE ACCOMPANIED WITH ADJACENT 24 INCH WHITE STOP BAR.
10. ALL SIGNS AND STRIPING TO BE INSTALLED PER TxMUTCD.
11. ALL STREET LIGHTS ALONG PROPOSED PUBLIC STREETS MUST CONFORM TO LIGHTING REGULATIONS IN HUTTO UDC SECTION 10.409 AND 10.605.9.

SIGN TYPE "A" SIGN TYPE "C" SIGN TYPE "D"

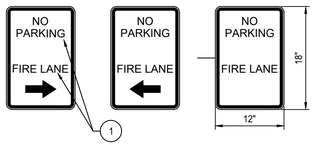

1 RED LETTERING ON A WHITE REFLECTIVE BACKGROUND

* NO PARKING SIGNS TO MEET 2018 IFC D103.3

REV	DESCRIPTION	DATE	APR

DESIGNED BY: DAZ
REVIEWED BY: TMH
DRAWN BY: DAZ

BGE, INC.
1701 DIRECTORS BOULEVARD, SUITE 1000
AUSTIN, TX 78744
TBPE Registration No. F-1046
TEL: 512-879-0400 www.bowmgay.com

COTTONWOOD CREEK, PHASE II
HUTTO, TEXAS

OVERALL SIGNAGE PLAN

SUBMITTAL DATE: 03-15-2021

STATE OF TEXAS
TIMOTHY M. HOLLAND
94848
LICENSED PROFESSIONAL ENGINEER
01/08/2021

SHEET
40 OF 54

Record Drawing

G:\TX\C\Projects\Lennar\8390-00-Cottonwood_PH2\LD\01_CADD\01_Sht\C-SP-SIGN-OVAL-PH-2.dwg Layout: OVERALL SIGNAGE PLAN Plotted: 7/8/2021 3:13:58 PM

GUIDELINES FOR DESIGN AND INSTALLATION OF TEMPORARY EROSION AND SEDIMENTATION CONTROLS

TYPE OF STRUCTURE	REACH LENGTH	MAXIMUM DRAINAGE AREA	SLOPE
SILT FENCE	N/A	2 ACRES	0 – 10%
	200 FEET	2 ACRES	10 – 20%
	100 FEET	1 ACRE	20 – 30%
	50 FEET	1/2 ACRE	> 30%
TRIANGLE FILTER DIKE	100 FEET	1/2 ACRE	< 30% SLOPE
	50 FEET	1/4 ACRE	> 30% SLOPE
ROCK BERM *, **	500 FEET	< 5 ACRES	0 – 10%

* FOR ROCK BERM DESIGN WHERE PARAMETERS ARE OTHER THAN STATED, DRAINAGE AREA CALCULATIONS AND ROCK BERM DESIGN MUST BE SUBMITTED FOR REVIEW.

** HIGH SERVICE ROCK BERMS MAY BE REQUIRED IN AREAS OF ENVIRONMENTAL SIGNIFICANCE AS DETERMINED BY THE CITY OF GEORGETOWN.

The Architect/Engineer assumes responsibility for appropriate use of this standard.

REVISION NOTE: ADOPTED 6/21/2006

GEORGETOWN TEXAS — Georgetown Utility Systems

CITY OF GEORGETOWN
CONSTRUCTION STANDARDS AND DETAILS

TEMPORARY EROSION AND SEDIMENTATION CONTROL GUIDELINES

DRAWING NAME: EC01 | SCALE: NTS | DATE: 1/2003 | DRAWN BY: MRS | APPROVED BY: TRB

NOTE: THIS SECTION IS INTENDED TO ASSIST THOSE PERSONS PREPARING WATER POLLUTION ABATEMENT PLANS (WPAP) OR STORM WATER POLLUTION PREVENTION PLANS (SW3P) THAT COMPLY WITH FEDERAL, STATE AND/OR LOCAL STORM WATER REGULATIONS.

1. THE CONTRACTOR TO INSTALL AND MAINTAIN EROSION/SEDIMENTATION CONTROLS AND TREE/NATURAL AREA PROTECTIVE FENCING PRIOR TO ANY SITE PREPARATION WORK (CLEARING, GRUBBING, GRADING, OR EXCAVATION). CONTRACTOR TO REMOVE EROSION/SEDIMENTATION CONTROLS AT THE COMPLETION OF PROJECT AND GRASS RESTORATION.
2. ALL PROJECTS WITHIN THE RECHARGE ZONE OF THE EDWARD'S AQUIFER SHALL SUBMIT A BEST MANAGEMENT PRACTICES AND WATER POLLUTION AND ABATEMENT PLAN TO THE TNRCC FOR APPROVAL PRIOR TO ANY CONSTRUCTION.
3. THE PLACEMENT OF EROSION/SEDIMENTATION CONTROLS TO BE IN ACCORDANCE WITH THE APPROVED EROSION AND SEDIMENTATION CONTROL PLAN AND WATER POLLUTION ABATEMENT PLAN. DEVIATIONS FROM THE APPROVED PLAN MUST BE SUBMITTED TO AND APPROVED BY THE OWNER'S REPRESENTATIVE.
4. ALL PLANTING SHALL BE DONE BETWEEN MAY 1 AND SEPTEMBER 15 EXCEPT AS SPECIFICALLY AUTHORIZED IN WRITING. IF PLANTING IS AUTHORIZED TO BE DONE OUTSIDE THE DATES SPECIFIED, THE SEED SHALL BE PLANTED WITH THE ADDITION OF WINTER FESCUE (KENTUCKY 31) AT A RATE OF 100lb/ACRE. GRASS SHALL BE COMMON BERMUDA GRASS, HULLED, MINIMUM 82% PURE LIVE SEED. ALL GRASS SEED SHALL BE FREE FROM NOXIOUS WEED, GRADE "A" RECENT CROP, RECLEANED AND TREATED WITH APPROPRIATE FUNGICIDE AT TIME OF MIXING. SEED SHALL BE FURNISHED IN SEALED, STANDARD CONTAINERS WITH DEALER'S GUARANTEED ANALYSIS.
5. ALL DISTURBED AREAS TO BE RESTORED AS NOTED IN THE WATER POLLUTION ABATEMENT PLAN.
6. THE PLANTED AREA TO BE IRRIGATED OR SPRINKLED IN A MANNER THAT WILL NOT ERODE THE TOPSOIL, BUT WILL SUFFICIENTLY SOAK THE SOIL TO A DEPTH OF FOUR (4) INCHES. THE IRRIGATION TO OCCUR AT 10–DAY INTERVALS DURING THE FIRST TWO MONTHS TO INSURE GERMINATION AND ESTABLISHMENT OF THE GRASS . RAINFALL OCCURRENCES OF 1/2 INCH OR GREATER TO POSTPONE THE WATERING SCHEDULE ONE WEEK.
7. RESTORATION TO BE ACCEPTABLE WHEN THE GRASS HAS GROWN AT LEAST 1–1/2 INCHES HIGH WITH 95***% COVERAGE,*** PROVIDED NO BARE SPOTS LARGER THAN 25 SQUARE FEET EXIST.
8. A MINIMUM OF FOUR (4) INCHES OF TOPSOIL TO BE PLACED IN ALL AREAS DISTURBED BY CONSTRUCTION.
9. THE CONTRACTOR TO HYDROMULCH OR SOD (AS SHOWN ON PLANS) ALL EXPOSED CUTS AND FILLS UPON COMPLETION OF CONSTRUCTION.
10. EROSION AND SEDIMENTATION CONTROLS TO BE INSTALLED OR MAINTAINED IN A MANNER WHICH DOES NOT RESULT IN SOIL BUILDUP WITHIN TREE DRIPLINE.
11. TO AVOID SOIL COMPACTION, CONTRACTOR SHALL NOT ALLOW VEHICULAR TRAFFIC, PARKING, OR STORAGE OF EQUIPMENT OR MATERIALS IN THE TREE DRIPLINE AREAS.
12. WHERE A FENCE IS CLOSER THAN FOUR (4) FEET TO A TREE TRUNK, PROTECT THE TRUNK WITH STRAPPED–ON PLANKING TO A HEIGHT OF EIGHT (8) FEET (OR TO THE LIMITS OF LOWER BRANCHING) IN ADDITION TO THE FENCING.
13. TREES TO BE REMOVED IN A MANNER WHICH DOES NOT IMPACT TREES TO BE PRESERVED.
14. ANY ROOT EXPOSED BY CONSTRUCTION ACTIVITY TO BE PRUNED FLUSH WITH THE SOIL. BACKFILL ROOT AREAS WITH GOOD QUALITY TOPSOIL AS SOON AS POSSIBLE. IF EXPOSED ROOT AREAS ARE NOT BACKFILLED WITHIN TWO DAYS, COVER THEM WITH ORGANIC MATERIAL IN A MANNER WHICH REDUCES SOIL TEMPERATURE AND MINIMIZES WATER LOSS DUE TO EVAPORATION.
15. CONTRACTOR TO PRUNE VEGETATION TO PROVIDE CLEARANCE FOR STRUCTURES, VEHICULAR TRAFFIC, AND EQUIPMENT BEFORE DAMAGE OCCURS (RIPPING OF BRANCHES, ETC.). ALL FINISHED PRUNING TO BE DONE ACCORDING TO RECOGNIZED, APPROVED STANDARDS OF THE INDUSTRY (REFERENCE THE "NATIONAL ARBORIST ASSOCIATION PRUNING STANDARDS FOR SHADE TREES").
16. THE CONTRACTOR IS TO INSPECT THE CONTROLS AT WEEKLY INTERVALS AND AFTER EVERY RAINFALL EXCEEDING 1/4 INCH TO VERIFY THAT THEY HAVE NOT BEEN SIGNIFICANTLY DISTURBED. ANY ACCUMULATED SEDIMENT AFTER A SIGNIFICANT RAINFALL TO BE REMOVED AND PLACED IN THE OWNER DESIGNATED SPOIL DISPOSAL SITE. THE CONTRACTOR TO CONDUCT PERIODIC INSPECTIONS OF ALL EROSION/SEDIMENTATION CONTROLS AND TO MAKE ANY REPAIRS OR MODIFICATIONS NECESSARY TO ASSURE CONTINUED EFFECTIVE OPERATION OF EACH DEVICE.
17. WHERE THERE IS TO BE AN APPROVED GRADE CHANGE, IMPERMEABLE PAVING SURFACE, TREE WELL, OR OTHER SUCH SITE DEVELOPMENT IMMEDIATELY ADJACENT TO A PROTECTED TREE, ERECT THE FENCE APPROXIMATELY TWO TO FOUR FEET (2'–4') BEHIND THE AREA IN QUESTION.
18. NO ABOVE AND/OR BELOW GROUND TEMPORARY FUEL STORAGE FACILITIES TO BE STORED ON THE PROJECT SITE.
19. IF EROSION AND SEDIMENTATION CONTROL SYSTEMS ARE EXISTING FROM PRIOR CONTRACTS, OWNER'S REPRESENTATIVE AND THE CONTRACTOR TO EXAMINE THE EXISTING EROSION AND SEDIMENTATION CONTROL SYSTEMS FOR DAMAGE PRIOR TO CONSTRUCTION. ANY DAMAGE TO PREEXISTING EROSION AND SEDIMENTATION CONTROLS NOTED TO BE REPAIRED AT OWNERS EXPENSE.
20. INTENTIONAL RELEASE OF VEHICLE OR EQUIPMENT FLUIDS ONTO THE GROUND IS NOT ALLOWED. CONTAMINATED SOIL RESULTING FROM ACCIDENTAL SPILL TO BE REMOVED AND DISPOSED OF PROPERLY.

The Architect/Engineer assumes responsibility for appropriate use of this standard.

REVISION NOTE: ADOPTED 6/21/2006

GEORGETOWN TEXAS — Georgetown Utility Systems

CITY OF GEORGETOWN
CONSTRUCTION STANDARDS AND DETAILS

EROSION AND SEDIMENTATION AND TREE PROTECTION NOTES

DRAWING NAME: EC01A | SCALE: NTS | DATE: 1/2003 | DRAWN BY: MRS | APPROVED BY: TRB

The Architect/Engineer assumes responsibility for appropriate use of this standard.

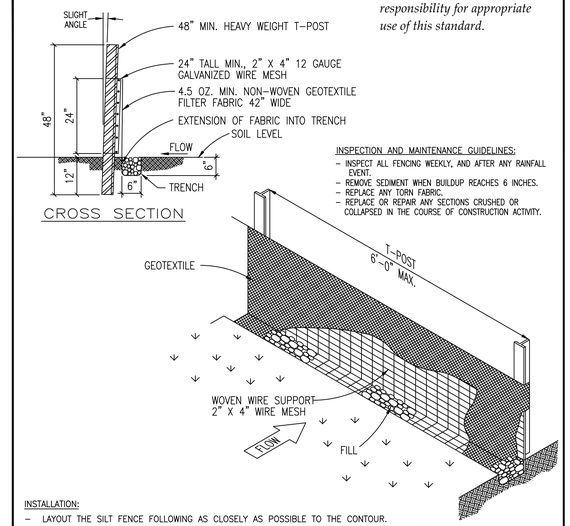

INSPECTION AND MAINTENANCE GUIDELINES:
- INSPECT ALL FENCING WEEKLY, AND AFTER ANY RAINFALL EVENT.
- REMOVE SEDIMENT WHEN BUILDUP REACHES 6 INCHES.
- REPLACE ANY TORN FABRIC.
- REPLACE OR REPAIR ANY SECTIONS CRUSHED OR COLLAPSED IN THE COURSE OF CONSTRUCTION ACTIVITY.

INSTALLATION:
- LAYOUT THE SILT FENCE FOLLOWING AS CLOSELY AS POSSIBLE TO THE CONTOUR.
- CLEAR THE GROUND OF DEBRIS, ROCKS, PLANTS (INCLUDING GRASSES TALLER THAN 2") TO PROVIDE A SMOOTH FLOW APPROACH SURFACE. EXCAVATE 6" DEEP X 6" WIDE TRENCH ON UPSTREAM SIDE OF FACE PER PLANS.
- DRIVE THE HEAVY DUTY T–POST AT LEAST 12 INCHES INTO THE GROUND AND AT A SLIGHT ANGLE TOWARDS THE FLOW.
- ATTACH THE 2" X 4" 12 GAUGE WELDED WIRE MESH TO THE T–POST WITH 11 1/2 GAUGE GALVANIZED T–POST CLIPS. THE TOP OF THE WIRE TO BE 24" ABOVE GROUND LEVEL. THE WELDED WIRE MESH TO BE OVERLAPPED 6" AND TIED AT LEAST 6 TIMES WITH HOG RINGS.
- THE SILT FENCE TO BE INSTALLED WITH A SKIRT A MINIMUM OF 6" WIDE PLACED ON THE UPHILL SIDE OF THE FENCE INSIDE EXCAVATED TRENCH. THE FABRIC TO OVERLAP THE TOP OF THE WIRE BY 1".
- ANCHOR THE SILT FENCE BY BACKFILLING WITH EXCAVATED DIRT AND ROCKS (NOT LARGER THAN 2").
- GEOTEXTILE SPLICES SHOULD BE A MINIMUM OF 18" WIDE ATTACHED IN AT LEAST 6 PLACES. SPLICES IN CONCENTRATED FLOW AREAS WILL NOT BE ACCEPTED.
- SILT FENCE SHALL BE REMOVED WHEN THE SITE IS COMPLETELY STABILIZED SO AS NOT TO BLOCK OR IMPEDE STORM FLOW OR DRAINAGE.

The Architect/Engineer assumes responsibility for appropriate use of this standard.

REVISION NOTE: ADOPTED 6/21/2006

GEORGETOWN TEXAS — Georgetown Utility Systems

CITY OF GEORGETOWN
CONSTRUCTION STANDARDS AND DETAILS

SILT FENCE DETAIL

DRAWING NAME: EC02 | SCALE: NTS | DATE: 1/2003 | DRAWN BY: MRS | APPROVED BY: TRB

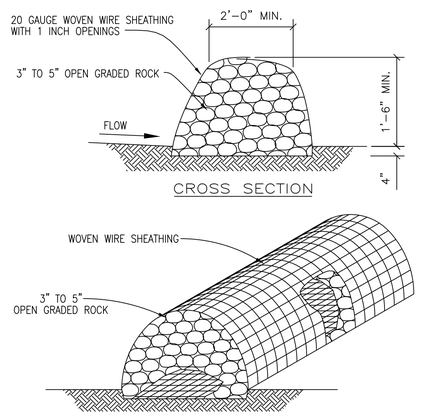

INSTALLATION:
- LAYOUT THE ROCK BERM FOLLOWING AS CLOSELY AS POSSIBLE TO THE CONTOUR.
- CLEAR THE GROUND OF DEBRIS, ROCKS OR PLANTS THAT WILL INTERFERE WITH INSTALLATION.
- PLACE WOVEN WIRE FABRIC ON THE GROUND ALONG THE PROPOSED INSTALLATION WITH ENOUGH OVERLAP TO COMPLETELY ENCIRCLE THE FINISHED SIZE OF THE BERM.
- PLACE THE ROCK ALONG THE CENTER OF THE WIRE TO THE DESIGNATED HEIGHT.
- WRAP THE STRUCTURE WITH THE PREVIOUSLY PLACED WIRE MESH SECURE ENOUGH SO THAT WHEN WALKED ACROSS THE STRUCTURE RETAINS IT'S SHAPE.
- SECURE WITH TIE WIRE.
- THE ENDS OF THE BERM SHOULD BE TIED INTO EXISTING UPSLOPE GRADE AND THE BERM SHOULD BE BURIED IN A TRENCH APPROX. 4 INCHES DEEP TO PREVENT FAILURE OF THE CONTROL.
- THE ROCK BERM SHOULD BE LEFT IN PLACE UNTIL ALL UPSTREAM AREAS ARE STABILIZED AND ACCUMULATED SILT REMOVED.

INSPECTION AND MAINTENANCE GUIDELINES:
- INSPECTION SHOULD BE MADE WEEKLY AND AFTER EACH RAINFALL EVENT BY THE RESPONSIBLE PARTY. FOR INSTALLATIONS IN STREAMBEDS, ADDITIONAL DAILY INSPECTIONS SHOULD BE MADE.
- REMOVE SEDIMENT AND OTHER DEBRIS WHEN BUILDUP REACHES 6 INCHES AND DISPOSE OF THE ACCUMULATED SILT IN AN APPROVED MANNER.
- REPLACE ANY LOOSE WIRE SHEATHING.
- THE BERM SHOULD BE RESHAPED AS NEEDED DURING INSPECTION.
- THE BERM SHOULD BE REPLACED WHEN THE STRUCTURE CEASES TO FUNCTION AS INTENDED DUE TO SILT ACCUMULATION AMONG THE ROCKS, WASHOUT, CONSTRUCTION TRAFFIC DAMAGE, ETC.

The Architect/Engineer assumes responsibility for appropriate use of this standard.

REVISION NOTE: ADOPTED 6/21/2006

GEORGETOWN TEXAS — Georgetown Utility Systems

CITY OF GEORGETOWN
CONSTRUCTION STANDARDS AND DETAILS

ROCK BERM DETAIL

DRAWING NAME: EC03 | SCALE: NTS | DATE: 1/2003 | DRAWN BY: MRS | APPROVED BY: TRB

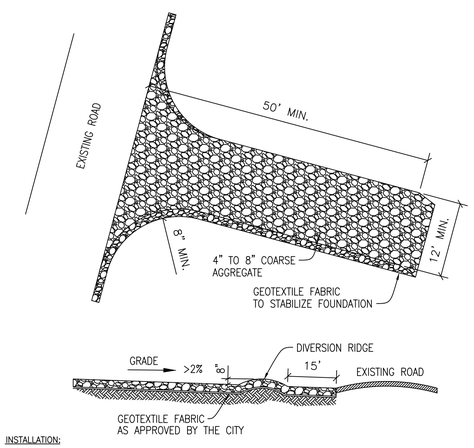

INSTALLATION:
- CLEAR THE AREA OF DEBRIS, ROCKS OR PLANTS THAT WILL INTERFERE WITH INSTALLATION.
- GRADE THE AREA FOR THE ENTRANCE TO FLOW BACK ON TO THE CONSTRUCTION SITE. RUNOFF FROM THE STABILIZED CONSTRUCTION
- PLACE GEOTEXTILE FABRIC AS APPROVED BY THE CITY.
- PLACE ROCK AS APPROVED BY THE CITY.

INSPECTIONS AND MAINTENANCE GUIDELINES:
- THE ENTRANCE SHOULD BE MAINTAINED IN A CONDITION, WHICH WILL PREVENT TRACKING OR FLOWING OF SEDIMENT ONTO PUBLIC RIGHTS–OF–WAY. THIS MAY REQUIRE PERIODIC TOP DRESSING WITH ADDITIONAL STONE AS CONDITIONS DEMAND AND REPAIR AND/OR CLEANOUT OF ANY MEASURES USED TO TRAP SEDIMENT.
- ALL SEDIMENT SPILLED, DROPPED, WASHED OR TRACKED ON TO PUBLIC RIGHTS–OF–WAY SHOULD BE REMOVED IMMEDIATELY BY CONTRACTOR.
- WHEN NECESSARY, WHEELS SHOULD BE CLEANED TO REMOVE SEDIMENT PRIOR TO ENTRANCE ONTO PUBLIC RIGHTS–OF–WAY.
- WHEN WASHING IS REQUIRED, IT SHOULD BE DONE ON AN AREA STABILIZED WITH CRUSHED STONE THAT DRAINS INTO AN APPROVED SEDIMENT TRAP OR SEDIMENT BASIN.
- ALL SEDIMENT SHOULD BE PREVENTED FROM ENTERING ANY STORM DRAIN, DITCH OR WATER COURSE BY USING APPROVED METHODS.

The Architect/Engineer assumes responsibility for appropriate use of this standard.

REVISION NOTE: ADOPTED 6/21/2006

GEORGETOWN TEXAS — Georgetown Utility Systems

CITY OF GEORGETOWN
CONSTRUCTION STANDARDS AND DETAILS

STABILIZED CONSTRUCTION ENTRANCE

DRAWING NAME: EC06 | SCALE: NTS | DATE: 1/2003 | DRAWN BY: MRS | APPROVED BY: TRB

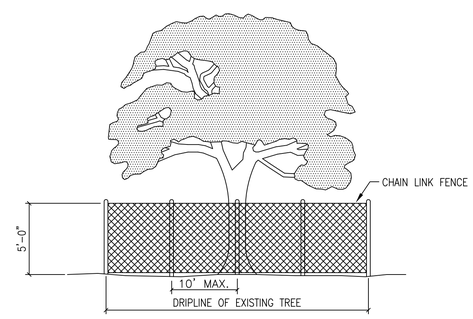

NOTES:

1. TREE PROTECTION FENCES SHALL BE INSTALLED PRIOR TO THE COMMENCEMENT OF ANY SITE PREPARATION WORK (CLEARING, GRUBBING OR GRADING).
2. FENCES SHALL COMPLETELY SURROUND THE TREE, OR CLUSTERS OF TREES; WILL BE LOCATED AT THE OUTERMOST LIMIT OF THE TREE BRANCHES (DRIPLINE), AND WILL BE MAINTAINED THROUGHOUT THE CONSTRUCTION PROJECT IN ORDER TO PREVENT THE FOLLOWING:
   - A. SOIL COMPACTION IN THE ROOT ZONE AREA RESULTING FROM VEHICULAR TRAFFIC, OR STORAGE OF EQUIPMENT OR MATERIALS.
   - B. ROOT ZONE DISTURBANCES DUE TO GRADE CHANGES (GREATER THAN SIX INCHES (6") CUT OR FILL, OR TRENCHING NOT REVIEWED AND AUTHORIZED BY THE CITY.
   - C. WOUNDS TO EXPOSED ROOTS, TRUNKS OR LIMBS BY MECHANICAL EQUIPMENT.
   - D. OTHER ACTIVITIES DETRIMENTAL TO TREES, SUCH AS CHEMICAL STORAGE, CEMENT TRUCK CLEANING AND FIRE.
3. EXCEPTIONS TO INSTALLING FENCES AT TREE DRIPLINES MAY BE PERMITTED IN THE FOLLOWING CASES:
   - A. WHERE PERMEABLE PAVING IS TO BE INSTALLED, ERECT THE FENCE AT THE OUTER LIMITS OF THE PERMEABLE PAVING AREA.
   - B. WHERE TREES ARE CLOSE TO PROPOSED BUILDINGS, ERECT THE FENCE NO CLOSER THAN SIX FEET (6'–0") TO BUILDING.

The Architect/Engineer assumes responsibility for appropriate use of this standard.

REVISION NOTE: ADOPTED 6/21/2006

GEORGETOWN TEXAS — Georgetown Utility Systems

CITY OF GEORGETOWN
CONSTRUCTION STANDARDS AND DETAILS

TREE PROTECTION – CHAIN LINK FENCE

DRAWING NAME: EC09 | SCALE: NTS | DATE: 1/2003 | DRAWN BY: MRS | APPROVED BY: TRB

REV	DESCRIPTION	DATE	APR

DESIGNED BY: DAZ
REVIEWED BY: TMH
DRAWN BY: DAZ

BGE, INC.
1701 DIRECTORS BOULEVARD, SUITE 1000
AUSTIN, TX 78744
TBPE Registration No. F-1046
TEL: 512-879-0400 www.brownsgay.com

COTTONWOOD CREEK, PHASE II
HUTTO, TEXAS

EROSION DETAILS (1 OF 2)

SUBMITTAL DATE: 03-15-2021

STATE OF TEXAS — TIMOTHY M. HOLLAND — 94548 — LICENSED PROFESSIONAL ENGINEER — 07/08/2021

SHEET
41 OF 54

G:\TXC\Projects\1.annar\8399-00-Cottonwood_PH2\LDV01_CADD\01_Sht\C-SP-DETL-PH-2.dwg Layout: EROSION DETAILS (1 OF 2) Plotted: 7/7/2021 4:56:41 PM

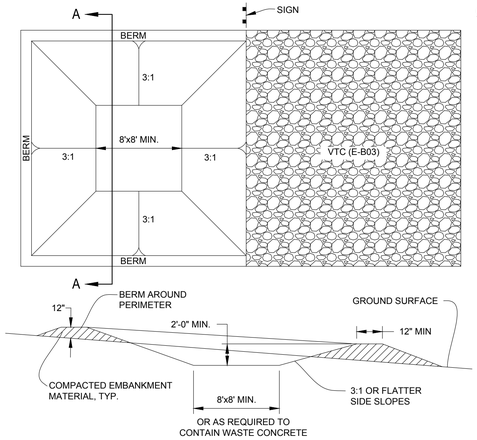

CROSS-SECTION A-A

CONCRETE WASHOUT AREA

CONCRETE WASHOUT AREA INSTALLATION NOTES

1. SELECT A SUITABLE LOCATION FOR CONCRETE WASHOUT AREA(S). (TO BE PLACED A MINIMUM OF 100' FROM DRAINAGE WAYS, BODIES OF WATER, AND INLETS.)
2. LOCATION FOR CONCRETE WASHOUT SHALL BE ADDED TO APPROVED SWP3 KEPT ON SITE.
3. THE CONCRETE WASHOUT AREA SHALL BE INSTALLED PRIOR TO ANY CONCRETE PLACEMENT ON SITE.
4. VEHICLE TRACKING CONTROL (VTC E-B03) IS REQUIRED AT THE ACCESS POINT.
5. SIGNS SHALL BE PLACED AT THE CONSTRUCTION ENTRANCE, AT THE WASHOUT AREA, AND ELSEWHERE AS NECESSARY TO CLEARLY INDICATE THE LOCATION OF THE CONCRETE WASHOUT AREA TO OPERATORS OF CONCRETE TRUCKS AND PUMP RIGS.
6. EXCAVATED MATERIAL SHALL BE UTILIZED IN PERIMETER BERM CONSTRUCTION.

CONCRETE WASHOUT AREA MAINTENANCE NOTES

1. THE CONCRETE WASHOUT AREA SHALL BE REPAIRED AND ENLARGED OR CLEANED OUT AS NECESSARY TO MAINTAIN CAPACITY FOR WASTED CONCRETE.
2. AT THE END OF CONSTRUCTION, ALL CONCRETE SHALL BE REMOVED FROM THE SITE AND DISPOSED OF AT AN APPROVED WASTE SITE.
3. WHEN THE CONCRETE WASHOUT AREA IS REMOVED, THE DISTURBED AREA SHALL BE DRILL SEEDED AND CRIMP MULCHED OR OTHERWISE STABILIZED IN A MANNER APPROVED BY THE CITY.
4. INSPECT WEEKLY, DURING AND AFTER ANY STORM EVENT.

REV	DESCRIPTION	DATE	APR

DESIGNED BY: DAZ
REVIEWED BY: TMH
DRAWN BY: DAZ

BGE, INC.
1701 DIRECTORS BOULEVARD, SUITE 1000
AUSTIN, TX 78744
TBPE Registration No. F-1046
TEL: 512-879-0400 www.bowngay.com

COTTONWOOD CREEK, PHASE II
HUTTO, TEXAS

EROSION DETAILS (2 OF 2)

SUBMITTAL DATE: 03-15-2021

STATE OF TEXAS
TIMOTHY M. HOLLAND
94548
LICENSED
PROFESSIONAL ENGINEER
07/08/2021

SHEET
42 OF 54

G:\TXC\Projects\Lennar\8399-00-Cottonwood_PH2\LD\01_CADD\01_Shts\C-SP-DETL-PH-2.dwg Layout: EROSION DETAILS (2 OF 2) Plotted: 7/7/2021 4:56:43 PM

Record Drawing

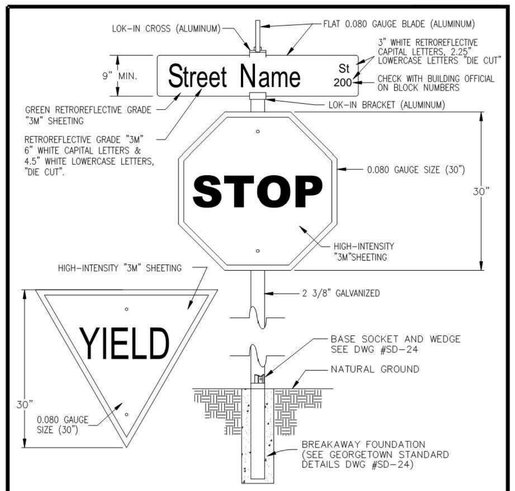

NOTES:
1. 7-FOOT MIN. HEIGHT FROM GROUND TO BOTTOM OF SIGN.
2. ALL SIGNS TO BE IN CONFORMANCE WITH THE CURRENT EDITION OF THE TEXAS MANUAL OF UNIFORM TRAFFIC CONTROL DEVICES (TMUTCD).
3. ALL SIGNAGE SHEETINGS SHALL BE HIGH-INTENSITY "3M" SHEETING.

CITY OF HUTTO CONSTRUCTION STANDARDS AND DETAILS	DRAWING NO. SD-03	
	UPDATED: 11/30/17	
STANDARD STREET SIGN DETAIL HUTTO UTILITY SYSTEMS	DRAWN BY: MSL	
	SCALE: N.T.S.	
	FILE NAME: SD03.DWG	

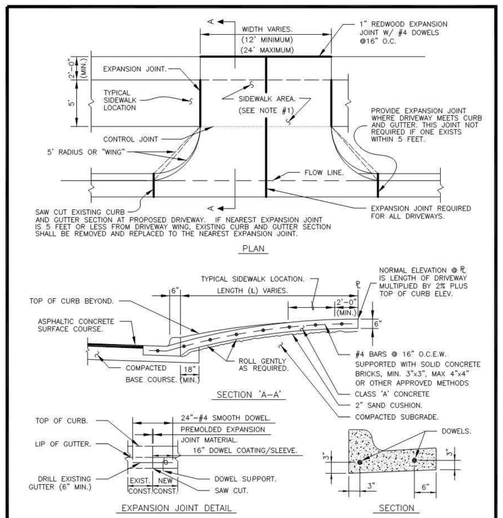

NOTES:
1. THE SIDEWALK AREA OF THE DRIVEWAY SHALL SLOPE TOWARD THE STREET PAVING AT NO MORE THAN 1.5%.
2. CONTROL JOINT DIMENSIONS PER DETAIL SD-06.

CITY OF HUTTO CONSTRUCTION STANDARDS AND DETAILS	DRAWING NO. SD-04	
	UPDATED: 4/1/2014	
RESIDENTIAL DRIVEWAY HUTTO UTILITY SYSTEMS	DRAWN BY: MSL	
	SCALE: N.T.S.	
	FILE NAME: SD04.DWG	

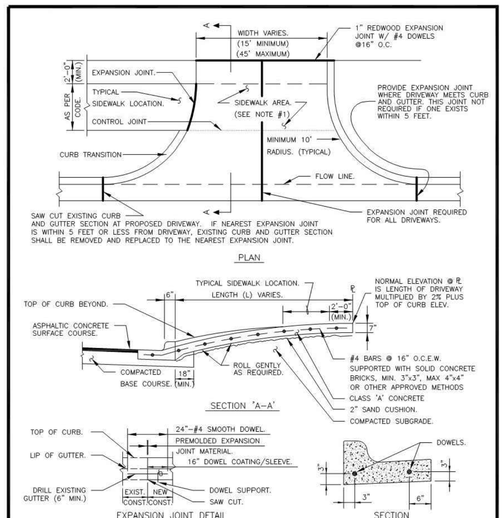

NOTE:
1. THE SIDEWALK AREA OF THE DRIVEWAY SHALL SLOPE TOWARD THE STREET PAVING AT NO MORE THAN 1.5%.
2. CONTROL JOINT DIMENSIONS PER DETAIL SD-06.

CITY OF HUTTO CONSTRUCTION STANDARDS AND DETAILS	DRAWING NO. SD-05	
	UPDATED: 4/1/2014	
COMMERCIAL DRIVEWAY HUTTO UTILITY SYSTEMS	DRAWN BY: MSL	
	SCALE: N.T.S.	
	FILE NAME: SD05.DWG	

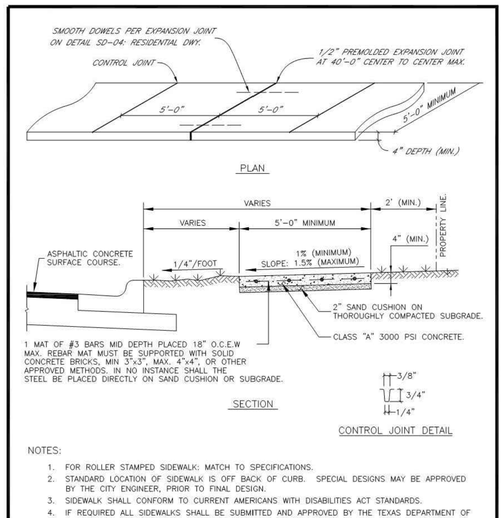

NOTES:
1. FOR ROLLER STAMPED SIDEWALK: MATCH TO SPECIFICATIONS.
2. STANDARD LOCATION OF SIDEWALK IS OFF BACK OF CURB. SPECIAL DESIGNS MAY BE APPROVED BY THE CITY ENGINEER, PRIOR TO FINAL DESIGN.
3. SIDEWALK SHALL CONFORM TO CURRENT AMERICANS WITH DISABILITIES ACT STANDARDS.
4. IF REQUIRED ALL SIDEWALKS SHALL BE SUBMITTED AND APPROVED BY THE TEXAS DEPARTMENT OF LICENSING AND REGULATION BY THE ENGINEER OF RECORD.
5. ANY VARIANCE IN TEXTURE, GRADE OR ALIGNMENT MUST BE APPROVED BY THE TEXAS DEPARTMENT OF LICENSING AND REGULATION.

CITY OF HUTTO CONSTRUCTION STANDARDS AND DETAILS	DRAWING NO. SD-06	
	UPDATED: 4/1/2014	
SIDEWALK DETAIL HUTTO UTILITY SYSTEMS	DRAWN BY: MSL	
	SCALE: N.T.S.	
	FILE NAME: SD06.DWG	

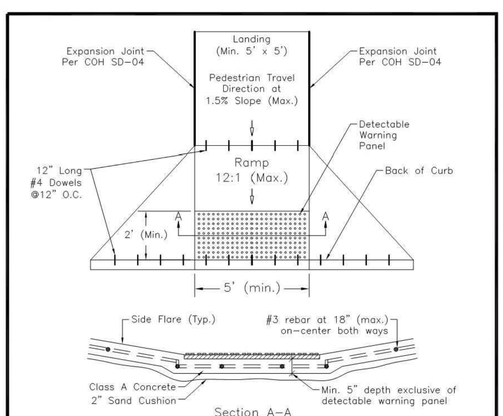

NOTES:
1. Curb ramps and detectable warning materials must be compliant with 2010 ADA Standards for Accessible Design and the 2012 TAS.
2. Detectable warning panels to be cast-in-place cast iron detectable warning plates manufactured by East Jordan Iron Works or Neenah Foundry.
3. Detectable warning panels to be installed per manufacturer's recommendations.
4. Detectable warning panels shall be located such that the edge nearest the curb line is at the back of curb. Align the rows of domes perpendicular to the grade break between the ramp run and the roadway.
5. Detectable warning panel to be contrasting color to the adjacent surfaces, including side flares.
6. Rebar to be installed per detail SD-06.

CITY OF HUTTO CONSTRUCTION STANDARDS AND DETAILS	DRAWING NO. SD-09	
	UPDATED: 2015-04-01	
STANDARD CURB RAMP HUTTO UTILITY SYSTEMS	DRAWN BY: MSL	
	SCALE: N.T.S.	
	FILE NAME: SD09.DWG	

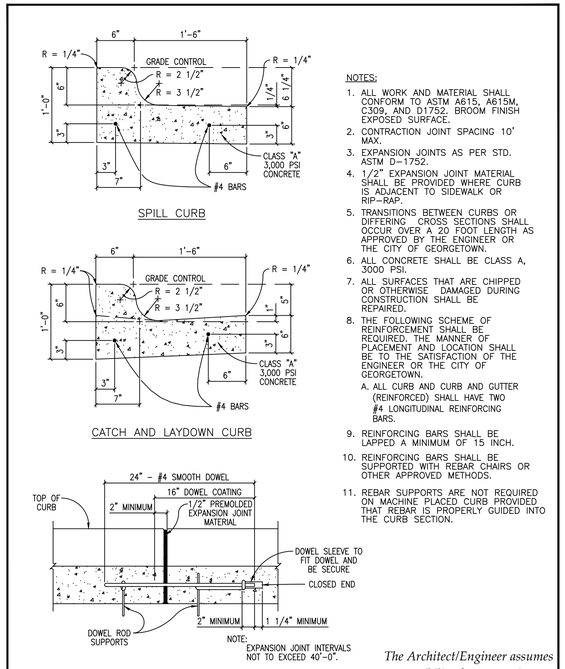

NOTES:
1. ALL WORK AND MATERIAL SHALL CONFORM TO ASTM A615, A615M, C309, AND D1752. BROOM FINISH EXPOSED SURFACE.
2. CONTRACTION JOINT SPACING 10' MAX.
3. EXPANSION JOINTS AS PER STD. ASTM D-1752.
4. 1/2" EXPANSION JOINT MATERIAL SHALL BE PROVIDED WHERE CURB IS ADJACENT TO SIDEWALK OR RIP-RAP.
5. TRANSITIONS BETWEEN CURBS OR DIFFERING CROSS SECTIONS SHALL OCCUR OVER A 20 FOOT LENGTH AS APPROVED BY THE ENGINEER OR THE CITY OF GEORGETOWN.
6. ALL CONCRETE SHALL BE CLASS A, 3000 PSI.
7. ALL SURFACES THAT ARE CHIPPED OR OTHERWISE DAMAGED DURING CONSTRUCTION SHALL BE REPAIRED.
8. THE FOLLOWING SCHEME OF REINFORCEMENT SHALL BE REQUIRED. THE MANNER OF PLACEMENT AND LOCATION SHALL BE TO THE SATISFACTION OF THE ENGINEER OR THE CITY OF GEORGETOWN.
   A. ALL CURB AND CURB AND GUTTER (REINFORCED) SHALL HAVE TWO #4 LONGITUDINAL REINFORCING BARS.
9. REINFORCING BARS SHALL BE LAPPED A MINIMUM OF 15 INCH.
10. REINFORCING BARS SHALL BE SUPPORTED WITH REBAR CHAIRS OR OTHER APPROVED METHODS.
11. REBAR SUPPORTS ARE NOT REQUIRED ON MACHINE PLACED CURB PROVIDED THAT REBAR IS PROPERLY GUIDED INTO THE CURB SECTION.

The Architect/Engineer assumes responsibility for appropriate use of this standard.

CITY OF GEORGETOWN CONSTRUCTION STANDARDS AND DETAILS	REVISION NOTE: ADOPTED 6/21/2006	
CURB AND GUTTER DETAILS	DRAWING NAME: SD06	
	SCALE: NTS / DATE:	
	DRAWN BY: MRS / APPROVED BY: TRB	

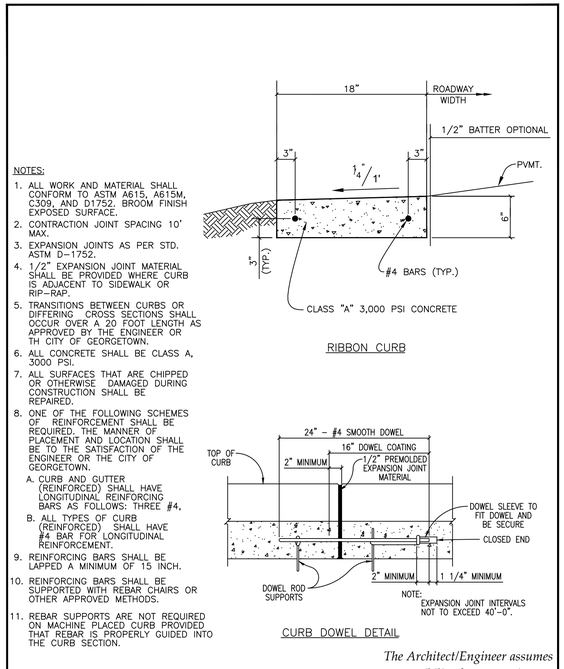

NOTES:
1. ALL WORK AND MATERIAL SHALL CONFORM TO ASTM A615, A615M, C309, AND D1752. BROOM FINISH EXPOSED SURFACE.
2. CONTRACTION JOINT SPACING 10' MAX.
3. EXPANSION JOINTS AS PER STD. ASTM D-1752.
4. 1/2" EXPANSION JOINT MATERIAL SHALL BE PROVIDED WHERE CURB IS ADJACENT TO SIDEWALK OR RIP-RAP.
5. TRANSITIONS BETWEEN CURBS OR DIFFERING CROSS SECTIONS SHALL OCCUR OVER A 20 FOOT LENGTH AS APPROVED BY THE ENGINEER OR TH CITY OF GEORGETOWN.
6. ALL CONCRETE SHALL BE CLASS A, 3000 PSI.
7. ALL SURFACES THAT ARE CHIPPED OR OTHERWISE DAMAGED DURING CONSTRUCTION SHALL BE REPAIRED.
8. ONE OF THE FOLLOWING SCHEMES OF REINFORCEMENT SHALL BE REQUIRED. THE MANNER OF PLACEMENT AND LOCATION SHALL BE TO THE SATISFACTION OF THE ENGINEER OR THE CITY OF GEORGETOWN.
   A. CURB AND GUTTER (REINFORCED) SHALL HAVE LONGITUDINAL REINFORCING BARS AS FOLLOWS: THREE #4,
   B. ALL TYPES OF CURB (REINFORCED) SHALL HAVE #4 BAR FOR LONGITUDINAL REINFORCEMENT.
9. REINFORCING BARS SHALL BE LAPPED A MINIMUM OF 15 INCH.
10. REINFORCING BARS SHALL BE SUPPORTED WITH REBAR CHAIRS OR OTHER APPROVED METHODS.
11. REBAR SUPPORTS ARE NOT REQUIRED ON MACHINE PLACED CURB PROVIDED THAT REBAR IS PROPERLY GUIDED INTO THE CURB SECTION.

The Architect/Engineer assumes responsibility for appropriate use of this standard.

CITY OF GEORGETOWN CONSTRUCTION STANDARDS AND DETAILS	REVISION NOTE: ADOPTED 6/21/2006	
RIBBON CURB DETAILS	DRAWING NAME: SD08	
	SCALE: NTS / DATE: 1/2003	
	DRAWN BY: MRS / APPROVED BY: TRB	

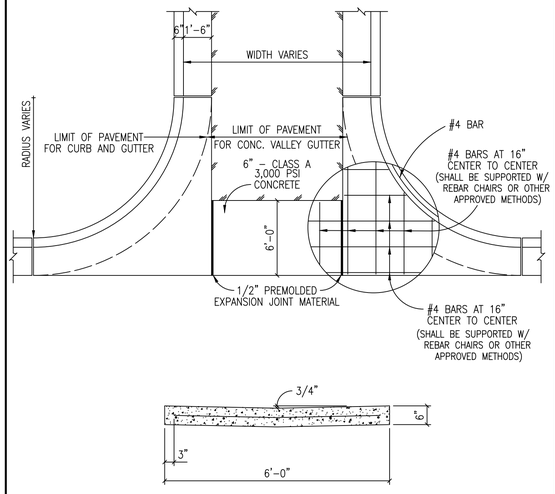

The Architect/Engineer assumes responsibility for appropriate use of this standard.

CITY OF GEORGETOWN CONSTRUCTION STANDARDS AND DETAILS	REVISION NOTE: ADOPTED 6/21/2006	
CONCRETE VALLEY GUTTER DETAIL	DRAWING NAME: SD03	
	SCALE: NTS / DATE: 1/2003	
	DRAWN BY: MRS / APPROVED BY: TRB	

REV	DESCRIPTION	DATE	APR

DESIGNED BY: DAZ
REVIEWED BY: TMH
DRAWN BY: DAZ

BGE, INC.
1701 DIRECTORS BOULEVARD, SUITE 1000
AUSTIN, TX 78744
TBPE Registration No. F-1046
TEL: 512-879-0400 www.browngay.com

COTTONWOOD CREEK, PHASE II
HUTTO, TEXAS

STREET DETAILS (1 OF 2)

SUBMITTAL DATE: 03-15-2021

TIMOTHY M. HOLLAND
94546
07/08/2021

SHEET
43 OF 54

G:\TXCI\Projects\Landmark\8399-00-Cottonwood_PH2\LD\01_CADD\01_Shts\C-SP-DETL-PH-2.dwg Layout: STREET DETAILS (1 OF 2) Plotted: 7/7/2021 4:56:45 PM
Record Drawing

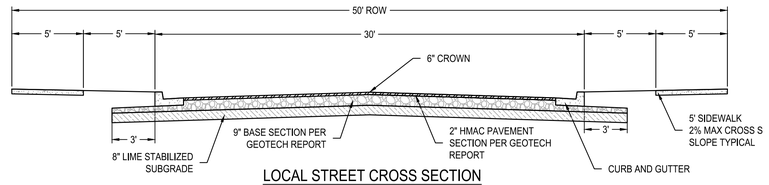

LOCAL STREET CROSS SECTION
NT.S.

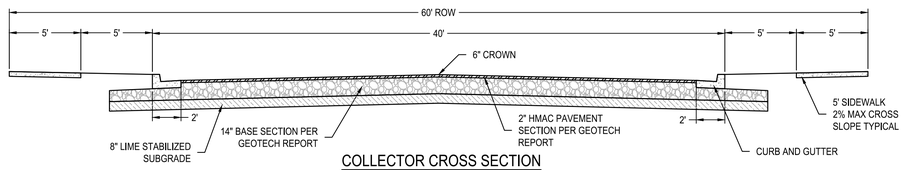

COLLECTOR CROSS SECTION
NT.S.

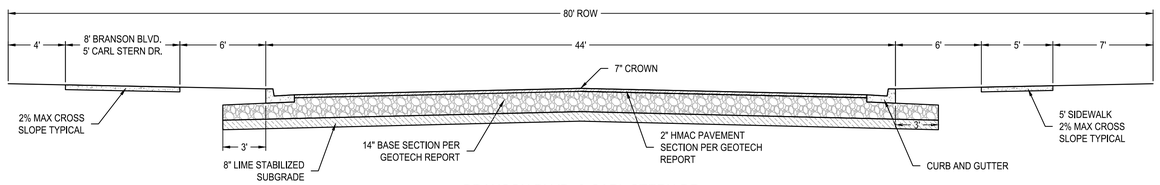

BRANSON BLVD. & CARL STERN DR.
CROSS SECTION
NT.S.

EACH ROADWAY OF DIVIDED HIGHWAY
SHALL BE BARRICADED, IN THE SAME MANNER.

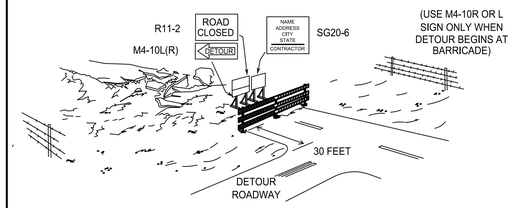

PERSPECTIVE VIEW

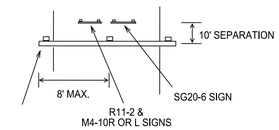

PLAN VIEW

1). R11-2 AND M4-10 SIGNS SHOULD BE MOUNTED ON INDEPENDENT SUPPORTS AT 7' MOUNTING HEIGHT IN CENTER OF ROADWAY.
2). ADVANCE SIGNING, INCLYDE CONSTRUCTION WARNING, SIGNS AND DETOUR SIGNING SHALL BE AS SPECIFIED ELSEWHERE IN THE PLANS.
3). THE THREE RAILS ON TYPE III BARRICADES SHALL BE REFLECTIVE ORANGE AND REFLECTIVE WHITE STRIPES ON ONE SIDE FACING ONE-WAY TRAFFIC AND BOTH SIDES FOR TWO-WAY TRAFFIC.
4). BARRICADE STRIPING SHOULD SLANT DOWNWARD IN THE DIRECTON OF DETOUR.
5). ALL SIGNS TO BE IN CONFORMANCE WITH THE CURRENT EDITION OF THE TEXAS MANUAL OF UNIFORM TRAFFIC CONTROL DEVICES (TMUTCD).

The Architect/Engineer assumes responsibility for appropriate use of this standard.

EST. 1848 GEORGETOWN TEXAS Georgetown Utility Systems Your Community Owned Utility

CITY OF GEORGETOWN
CONSTRUCTION STANDARDS AND DETAILS
TYPE III CONSTRUCTION BARRICADE

REVISION NOTE	ADOPTED 6/21/2006
DRAWING NAME	SD22
SCALE: NTS	DATE: 1/2003
DRAWN BY: MRS	APPROVED BY: TRB

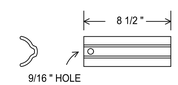

WEDGE

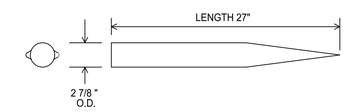

BASE SOCKET

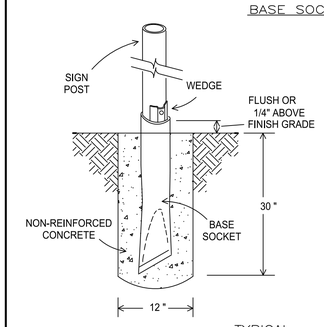

TYPICAL ASSEMBLY

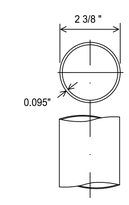

SIGN POST

The Architect/Engineer assumes responsibility for appropriate use of this standard.

EST. 1848 GEORGETOWN TEXAS Georgetown Utility Systems Your Community Owned Utility

CITY OF GEORGETOWN
CONSTRUCTION STANDARDS AND DETAILS
POZ-LOC (BREAKAWAY FOUNDATION)

REVISION NOTE	ADOPTED 6/21/2006
DRAWING NAME	SD24
SCALE: NTS	DATE: 1/2003
DRAWN BY: MRS	APPROVED BY: TRB

REV	DESCRIPTION	DATE	APR

DESIGNED BY: DAZ
REVIEWED BY: TMH
DRAWN BY: DAZ

BGE

BGE, INC.
1701 DIRECTORS BOULEVARD, SUITE 1000
AUSTIN, TX 78744
TBPE Registration No. F-1046
TEL: 512-879-0400 www.browngay.com

COTTONWOOD CREEK, PHASE II
HUTTO, TEXAS

STREET DETAILS (2 OF 2)

SUBMITTAL DATE: 03-15-2021

STATE OF TEXAS
TIMOTHY M. HOLLAND
94546
LICENSED PROFESSIONAL ENGINEER
07/08/2021

SHEET
44 OF 54

G:\TXC\Projects\Landmark\8399-00-Cottonwood_PH2\LD\01_CADD\01_Shts\C-SP-DETL-PH-2.dwg Layout: STREET DETAILS (2 OF 2) Plotted: 7/7/2021 4:56:47 PM

Record Drawing

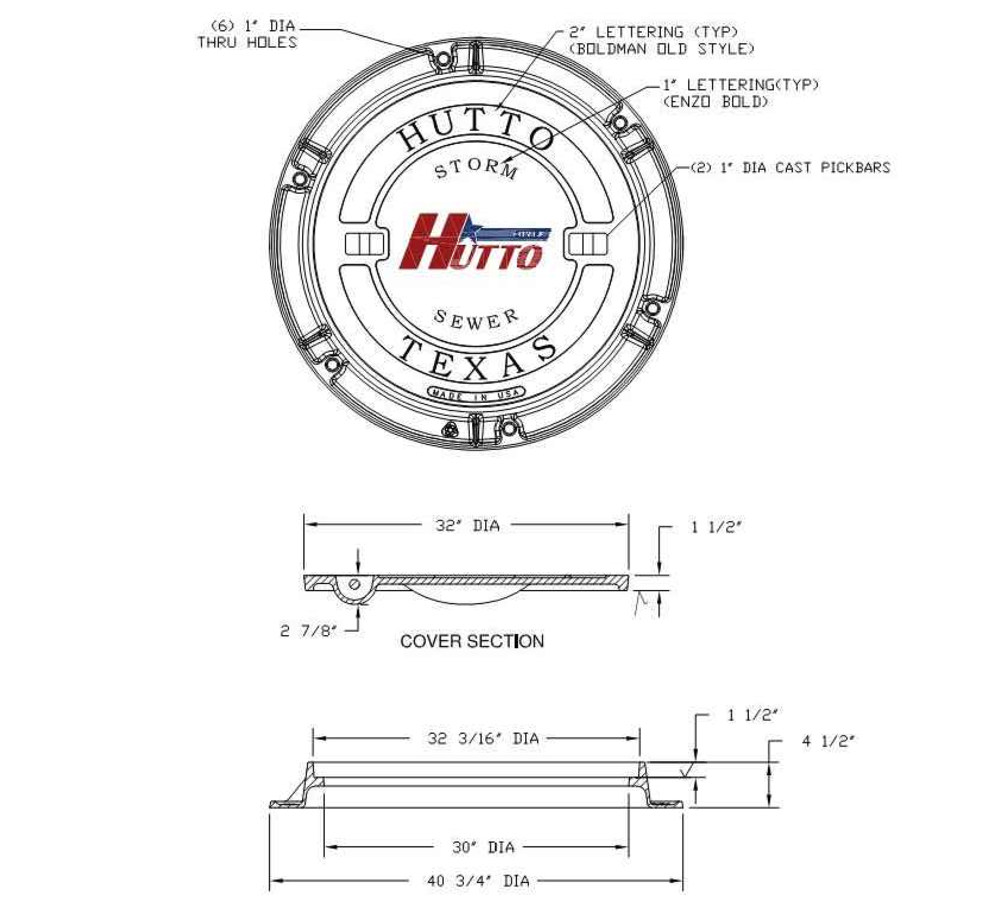

NOTES
1. STANDARD STORMSEWER MANHOLE SET TO BE EAST JORDAN IRON WORKS, INC. CATALOG NO. V1420RG/ V1432-3DI, OR APPROVED EQUAL. COVER TO BE STAMPED "STORM SEWER."
2. STANDARD STORMSEWER MANHOLE SET TO BE HEAVY DUTY LOAD RATED.
3. FOR MORE DETAILED SPECIFICATIONS, REFER TO EAST JORDAN IRON WORKS, INC. REFERENCE PRODUCT DRAWINGS 41432105A01 AND 41432105.
4. MANHOLE COVER TO BE DUCTILE IRON PER ASTM A536 (70-50-05). SEE EAST JORDAN IRON WORKS, INC. CATALOG NO. V1432-3.
5. MANHOLE FRAME TO BE GRAY IRON PER ASTM A48 CL35B.

CITY OF HUTTO
CONSTRUCTION STANDARDS AND DETAILS
STANDARD STORMSEWER MANHOLE SET
ENGINEERING & PUBLIC WORKS

DRAWING NO.	SD01
UPDATED:	02/01/2019
DRAWN BY:	BB
SCALE:	N.T.S.
FILE NAME:	SD01.DWG

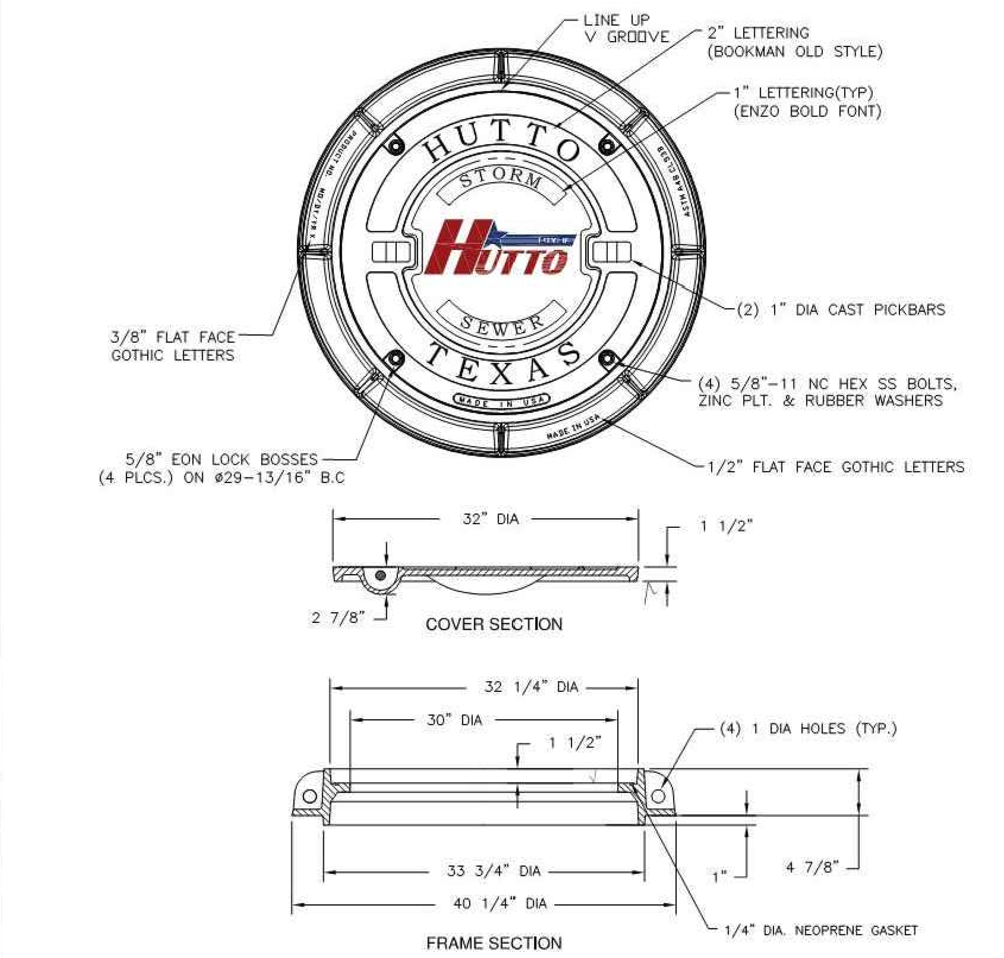

NOTES
1. BOLTED STORM WATER MANHOLE SET TO BE EAST JORDAN IRON WORKS, INC. CATALOG NO. V2432. OR APPROVED EQUAL, COVER TO BE STAMPED "STORM SEWER."
2. STANDARD STORMWATER MANHOLE SET TO BE HEAVY DUTY LOAD RATED.
3. FOR MORE DETAILED SPECIFICATIONS, REFER TO EAST JORDAN IRON WORKS, INC. REFERENCE PRODUCT DRAWING 42432114W01
4. FOR STANDARD STORMWATER MANHOLE SET REFER TO DETAIL SD01.
5. MANHOLE COVER TO BE DUCTILE IRON PER ASTM A536 (70-50-05). SEE EAST JORDAN IRON WORKS, INC CATALOG NO. V2432-3, PRODUCT DRAWING 42432114.
6. MANHOLE FRAME TO BE GRAY IRON PER ASTM A48 CL35B.

CITY OF HUTTO
CONSTRUCTION STANDARDS AND DETAILS
BOLTED STORMSEWER MANHOLE SET
ENGINEERING & PUBLIC WORKS

DRAWING NO.	SD1A
UPDATED:	02/01/2019
DRAWN BY:	BB
SCALE:	N.T.S.
FILE NAME:	SD1A.DWG

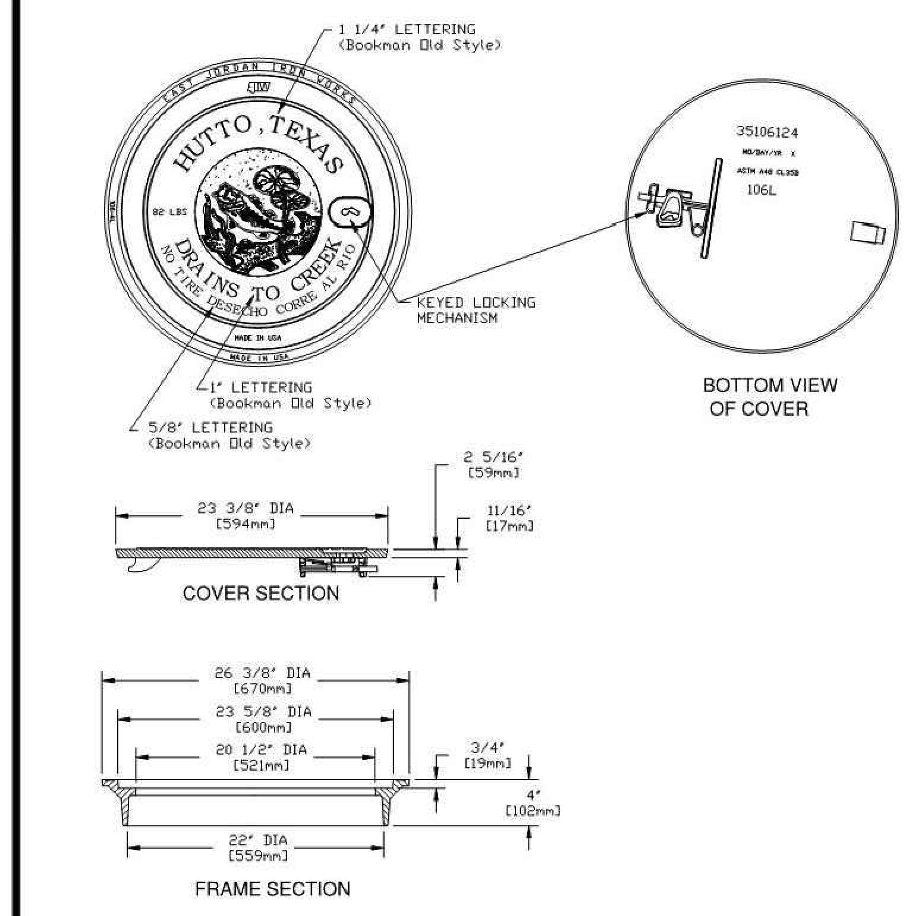

NOTES:
1. STANDARD CURB INLET LID SET TO BE EAST JORDAN IRON WORKS, INC. CATALOG NO. 106-4L, OR APPROVED EQUAL.
2. FOR MORE DETAILED SPECIFICATIONS, REFER TO EAST JORDAN IRON WORKS, INC. REFERENCE PRODUCT DRAWING 35506124.
3. CURB INLET LID AND FRAME TO BE GRAY IRON PER ASTM A48 CL35B.

CITY OF HUTTO
CONSTRUCTION STANDARDS AND DETAILS
STANDARD CURB INLET LID
HUTTO UTILITY SYSTEMS

DRAWING NO.	SD-02
UPDATED:	10/05/10
DRAWN BY:	MSL
SCALE:	N.T.S.
FILE NAME:	SD02.DWG

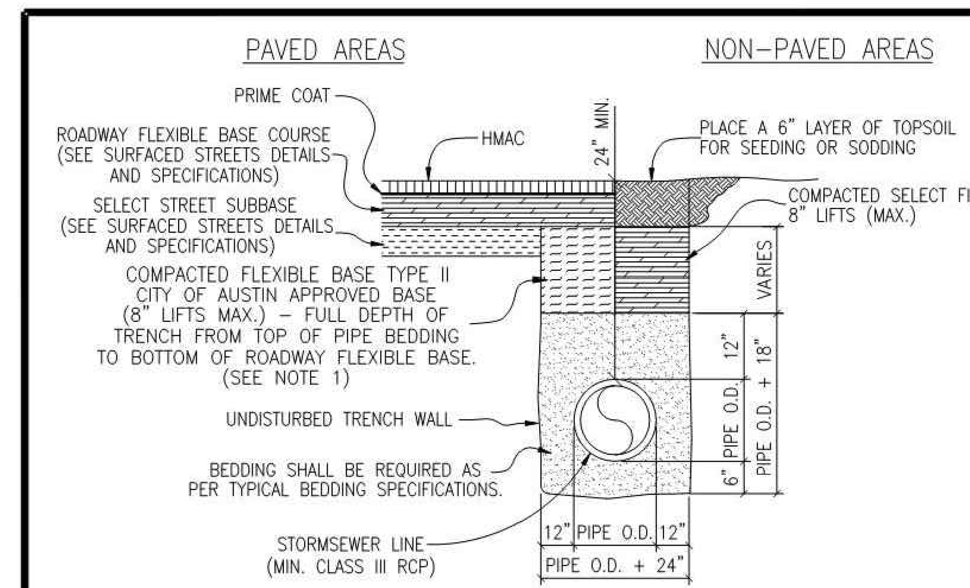

NOTES:
1. A MINIMUM OF ONE DENSITY TEST SHALL BE TAKEN EVERY TWO HUNDRED (200) FEET FOR EACH EIGHT (8) INCH LIFT OF BASE. PROCTORS FOR MATERIALS USED IN BACKFILLING SHALL BE OBTAINED BY A CERTIFIED LABORATORY. DENSITY TESTS SHALL BE CONDUCTED BY A CERTIFIED LABORATORY OR THE PERMITTEE'S CONSULTANTS. THE PERCENTAGE OF MAXIMUM DENSITY REQUIRED SHALL BE IN ACCORDANCE WITH THE LATEST EDITION OF "THE DEPARTMENT OF TRANSPORTATION STANDARD SPECIFICATIONS FOR ROAD AND BRIDGE CONSTRUCTION" AT THE TIME THE PERMIT WAS ISSUED. ALL DENSITY TESTS SHALL BE COMPLETED AND ACCEPTED ON EACH LAYER PRIOR TO ADDITIONAL BACKFILLING. A COPY OF ALL COMPLETED AND ACCEPTED DENSITY TESTS SHALL BE FURNISHED TO CITY OF HUTTO. BACKFILL COMPACTION SHALL BE A MINIMUM OF 95% MAXIMUM DENSITY PER TxDOT 113E SPECIFICATIONS.
2. THICKNESS FOR HMAC, ROADWAY FLEXIBLE BASE COURSE, AND SELECT STREET SUBBASE PER GEOTECHNICAL ENGINEER RECOMMENDATIONS.
3. CONTRACTOR OR ENGINEER MAY USE FLOWABLE BACKFILL AS AN ALTERNATE BACKFILL MATERIAL.
4. STORM SEWER PIPE SHALL BE REINFORCED CONCRETE CLASS III UNLESS DEPTH OF PIPE REQUIRES A STRONGER CLASS.
5. ALL JOINTS SHALL BE WRAPPED WITH GEOTEXTILE FABRIC PER DETAIL SD-08.

CITY OF HUTTO
CONSTRUCTION STANDARDS AND DETAILS
STORM SEWER TRENCH AND EMBEDMENT
HUTTO UTILITY SYSTEMS

DRAWING NO.	SD-07
UPDATED:	12/13/17
DRAWN BY:	BB
SCALE:	N.T.S.
FILE NAME:	SD07.DWG

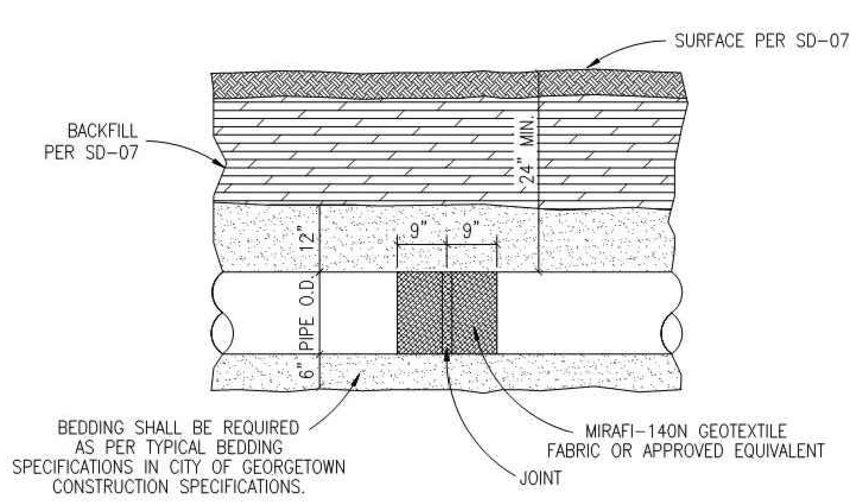

NOTES
1. PIPE SHALL BE REINFORCED CONCRETE PIPE CLASS III UNLESS THE DEPTH OF PIPE REQUIRES A STRONGER CLASS.
2. ALL FITTINGS AND WYES SHALL BE MANUFACTURED AND NOT CONSTRUCTED ON THE PROJECT WITHOUT PRIOR APPROVAL FROM THE CITY.
3. ALL JOINTS SHALL BE WRAPPED WITH MIRAFI-140N GEOTEXTILE FABRIC OR APPROVED EQUIVALENT. EACH JOINT SHALL BE WRAPPED WITH 18" WIDE FABRIC CENTERED ON THE JOINT.

CITY OF HUTTO
CONSTRUCTION STANDARDS AND DETAILS
STORM SEWER TRENCH AND EMBEDMENT (PROFILE)
HUTTO UTILITY SYSTEMS

DRAWING NO.	SD-08
UPDATED:	10/27/14
DRAWN BY:	MSL
SCALE:	N.T.S.
FILE NAME:	SD08.DWG

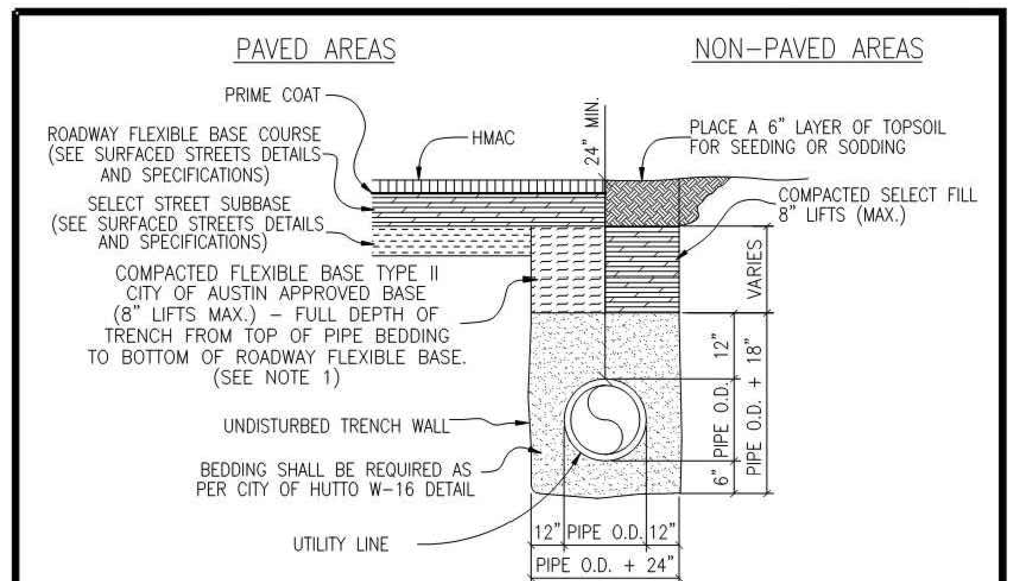

NOTES:
1. A MINIMUM OF ONE DENSITY TEST SHALL BE TAKEN EVERY TWO HUNDRED (200) FEET FOR EACH EIGHT (8) INCH LIFT OF BASE. PROCTORS FOR MATERIALS USED IN BACKFILLING SHALL BE OBTAINED BY A CERTIFIED LABORATORY. DENSITY TESTS SHALL BE CONDUCTED BY A CERTIFIED LABORATORY OR THE PERMITTEE'S CONSULTANTS. THE PERCENTAGE OF MAXIMUM DENSITY REQUIRED SHALL BE IN ACCORDANCE WITH THE LATEST EDITION OF "THE DEPARTMENT OF TRANSPORTATION STANDARD SPECIFICATIONS FOR ROAD AND BRIDGE CONSTRUCTION" AT THE TIME THE PERMIT WAS ISSUED. ALL DENSITY TESTS SHALL BE COMPLETED AND ACCEPTED ON EACH LAYER PRIOR TO ADDITIONAL BACKFILLING. A COPY OF ALL COMPLETED AND ACCEPTED DENSITY TESTS SHALL BE FURNISHED TO CITY OF HUTTO. BACKFILL COMPACTION SHALL BE A MINIMUM OF 95% MAXIMUM DENSITY PER TxDOT 113E SPECIFICATIONS.
2. THESE SPECIFICATIONS MAY BE SUPERSEDED BY THE GOVERNING AGENCY.
3. CITY ENGINEER MAY GIVE PERMISSION TO USE FLOWABLE BACKFILL AS AN ALTERNATE BACKFILL MATERIAL.
4. STORM SEWER PIPE SHALL BE REINFORCED CONCRETE CLASS III UNLESS DEPTH OF PIPE REQUIRES A STRONGER CLASS.
5. ALL JOINTS SHALL BE WRAPPED WITH GEOTEXTILE FABRIC PER DETAIL SD-08.

CITY OF HUTTO
CONSTRUCTION STANDARDS AND DETAILS
UTILITY TRENCH AND EMBEDMENT
HUTTO UTILITY SYSTEMS

DRAWING NO.	SD-10
UPDATED:	12/13/17
DRAWN BY:	BB
SCALE:	N.T.S.
FILE NAME:	SD10.DWG

The Architect/Engineer assumes responsibility for appropriate use of this standard.

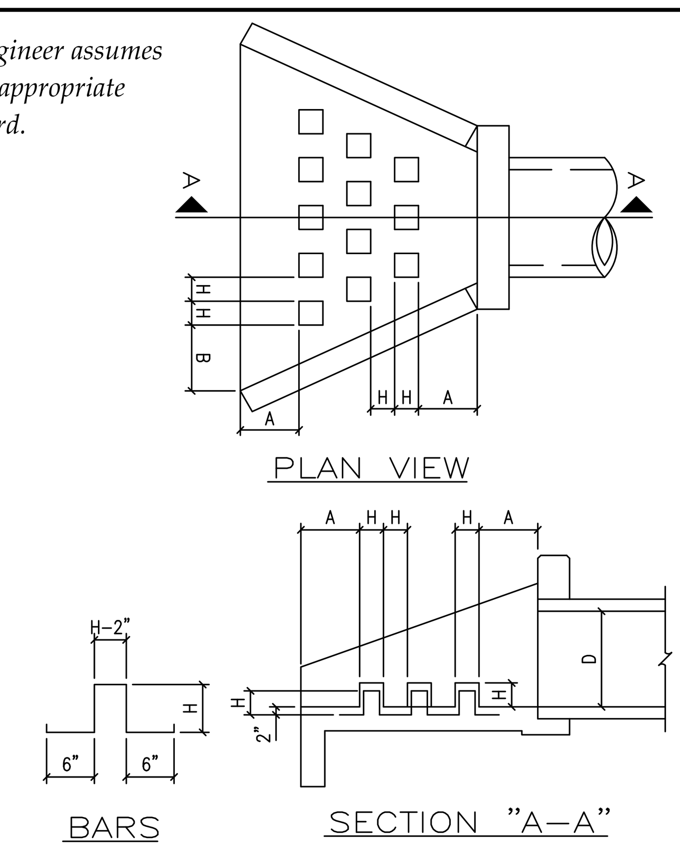

NOTES:
1. USE CLASS "A" CONCRETE, 3,000 PSI AT 28 DAYS, UNLESS NOTED.
2. REINFORCING STEEL - ASTM A615, GRADE 40, UNLESS NOTED.
3. LAP REINFORCING 30 BAR DIAMETERS MIN. AT SPLICES, UNLESS NOTED.
4. CHAMFER EXPOSED EDGES OF CONCRETE 3/4", UNLESS NOTED.
5. PLACE REINFORCING WITH THE CENTER OF THE OUTSIDE BARS 2 INCHES FROM THE SURFACE OF THE CONCRETE.

TABLE OF DIMENSIONS FOR ENERGY DISSIPATOR DETAIL

D PIPE DIAMETER (INCHES)	NUMBER OF ROWS OF DISSIPATORS	NUMBER OF DISSIPATORS IN FRONT ROW	H (INCHES)	A (INCHES)	B (INCHES)
12	1	3	4	4	9.1875
18	2	4	4 1/2	9 1/2	15.5625
24	2	5	6	14 3/4	16 1/2
30	3	6	7 1/2	12 1/2	14 3/8
36	3	6	9	16 1/4	18 5/16
42	3	6	10 1/2	20	22 1/4
48	3	6	12	23 3/4	26 1/4
54	3	6	13 1/2	27 1/2	27 3/4
60	3	6	15	31 1/4	31 5/8

REVISION NOTE: ADOPTED 6/21/2006

GEORGETOWN TEXAS EST. 1848
Georgetown Utility Systems
Your Community Owned Utility

CITY OF GEORGETOWN
CONSTRUCTION STANDARDS AND DETAILS
ENERGY DISSIPATER DETAIL

DRAWING NAME:	SD20
SCALE: NTS	DATE: 1/2003
DRAWN BY: MRS	APPROVED BY: TRB

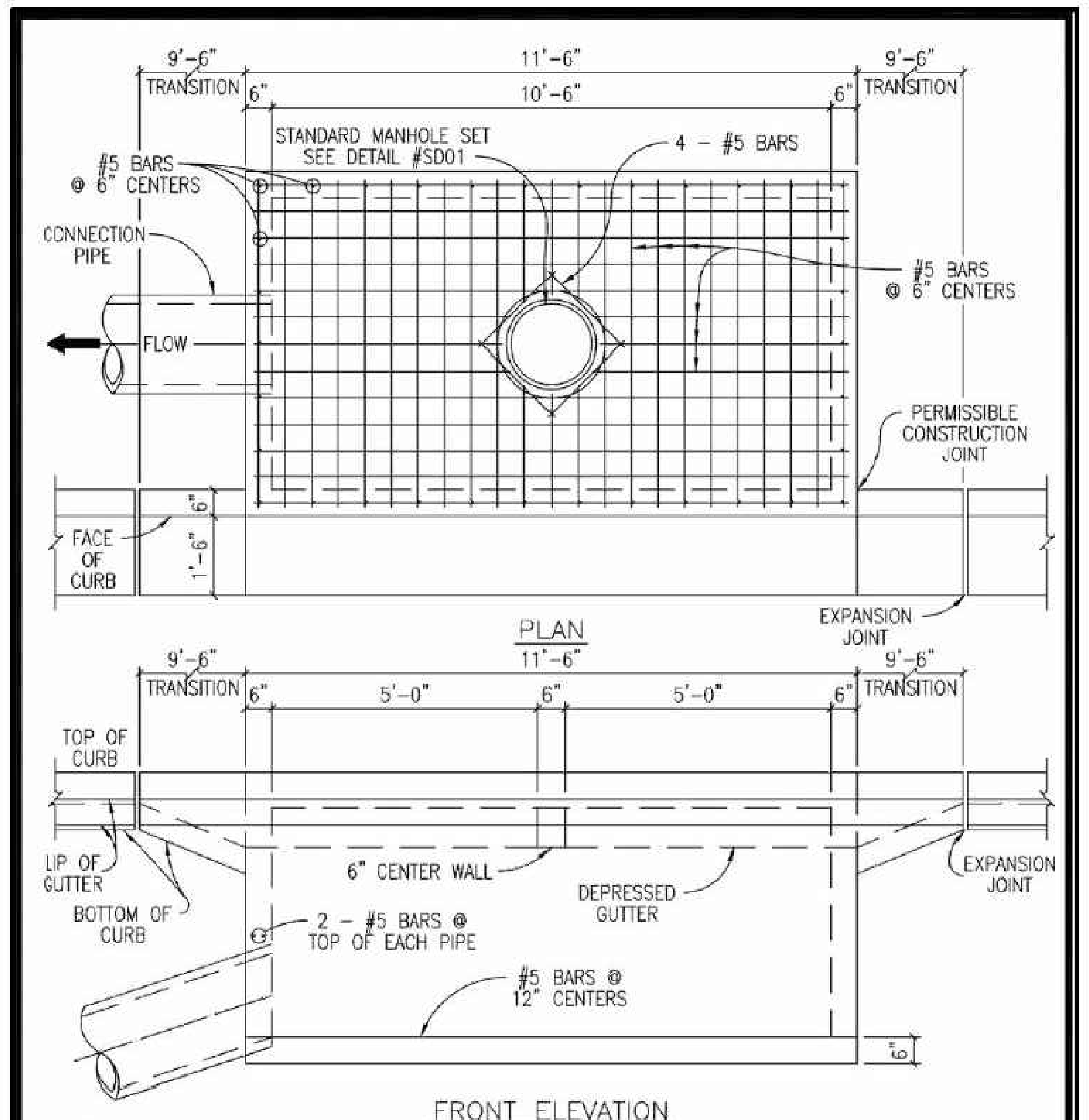

NOTES:
1. ALL CONCRETE SHALL BE CLASS "A" 3,000 PSI CONCRETE.
2. STORM SEWER PIPE MATERIAL TO BE R.C.P. (CLASS III) UNLESS OTHERWISE APPROVED BY THE CITY OF HUTTO.

CITY OF HUTTO
CONSTRUCTION STANDARDS AND DETAILS
CURB INLET
ENGINEERING & PUBLIC WORKS

DRAWING NO.	SD10
UPDATED:	09/15/18
DRAWN BY:	BB
SCALE:	N.T.S.
FILE NAME:	SD10.DWG

REV	DESCRIPTION	DATE	APR

DESIGNED BY: DAZ
REVIEWED BY: TMH
DRAWN BY: DAZ

BGE

BGE, INC.
1701 DIRECTORS BOULEVARD, SUITE 1000
AUSTIN, TX 78744
TBPE Registration No. F-1046
TEL: 512-879-0400 www.browngay.com

COTTONWOOD CREEK, PHASE II
HUTTO, TEXAS
STORM DETAILS

SUBMITTAL DATE: 03-15-2021

STATE OF TEXAS
TIMOTHY M. HOLLAND
94848
LICENSED PROFESSIONAL ENGINEER
07/08/2021

SHEET
45 OF 54

G:\TXC\Projects\Lennar\8390-00-Cottonwood_PH2\LD\01_CADD\01_Shts\C-SP-DETL-PH-2.dwg Layout: STORM DETAILS Plotted: 7/7/2021 4:56:50 PM

Record Drawing

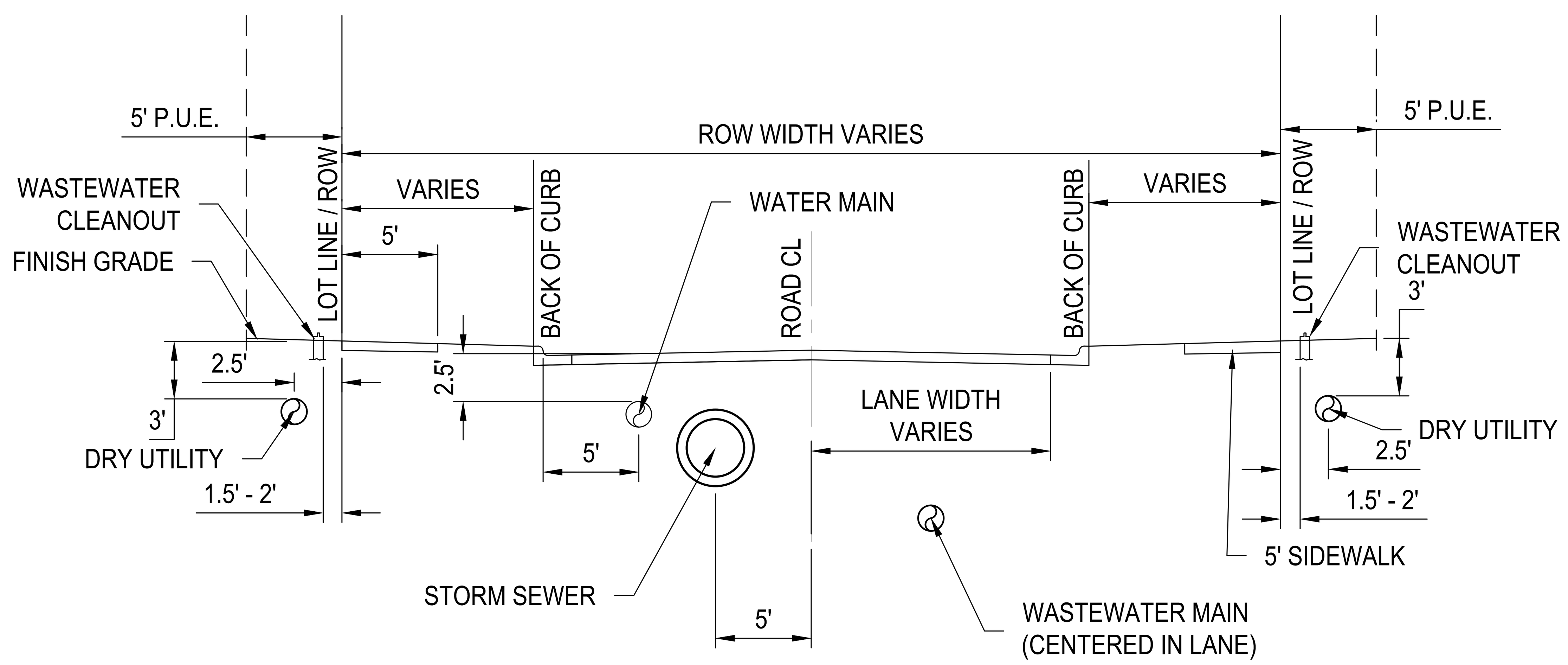

TYPICAL UTILITY CROSS SECTION

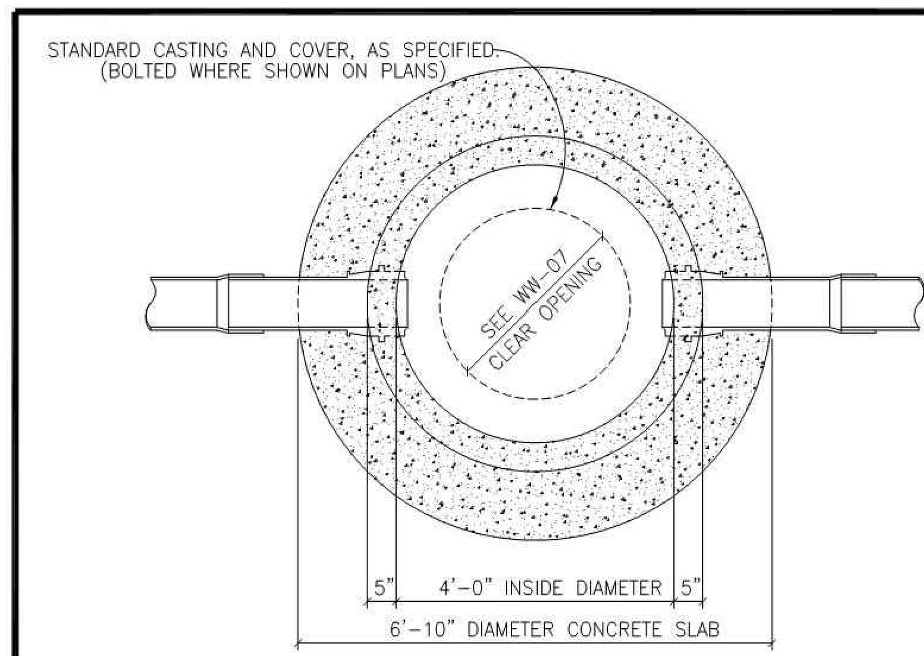

MANHOLE PLAN

CITY OF HUTTO NOTES:

MANHOLE DETAILS SHALL REFLECT THE CITY'S MINIMUM SPECIFICATIONS, AS STATED BELOW:

A. ALL MANHOLES SHALL BE 48" I.D., R.C.P., CLASS III, WITH RUBBER O-RING GASKET JOINTS CONFORMING TO ASTM C478, C433 AND C76.
B. ALL MANHOLES SHALL HAVE WATER-TIGHT FRAME AND COVER, WITH A MINIMUM 30" CLEAR OPENING, AS MANUFACTURED BY EAST JORDAN IRON WORKS (AS PER DETAIL # WW-07 & # WW-07A) OR APPROVED EQUAL.
C. ALL MANHOLES SHALL BE CONCRETE WITH CAST IRON FRAME AND COVER.
D. ALL MANHOLES SHALL HAVE A CONCENTRIC CONE.
E. MANHOLES MAY HAVE A FLAT LID, IF APPROVED BY CITY OF HUTTO, BEING 12" THICK WITH A MINIMUM 30" OPENING, AS MANUFACTURED BY CALVERT CONCRETE OR APPROVED EQUAL M.F.G. CONFORMING TO ASTM C478, 5000 P.S.I. CONCRETE, TRAFFIC BEARING, AND O-RING JOINT CONFORMING TO ASTM C443.
F. INVERTS AND FLEXIBLE SEAL BOOTS, PER ASTM C-923, SHALL BE CAST INTO BASE SECTION.
G. MINIMUM DROP BETWEEN INVERTS SHALL BE ONE-TENTH OF A FOOT (0.1').
H. TWO (2") INCH GRADE RINGS WITH AN I.D. TO MATCH FRAMES CLEAR OPENING, MINIMUM OF TWO (2), MAXIMUM OF FIVE (5) GRADE RINGS REQUIRED.

CITY OF HUTTO
CONSTRUCTION STANDARDS AND DETAILS
STANDARD MANHOLE - PLAN
HUTTO UTILITY SYSTEMS

DRAWING NO. WW-02
UPDATED: 09/20/10
DRAWN BY: XXX
SCALE: N.T.S.
FILE NAME: WW02.DWG

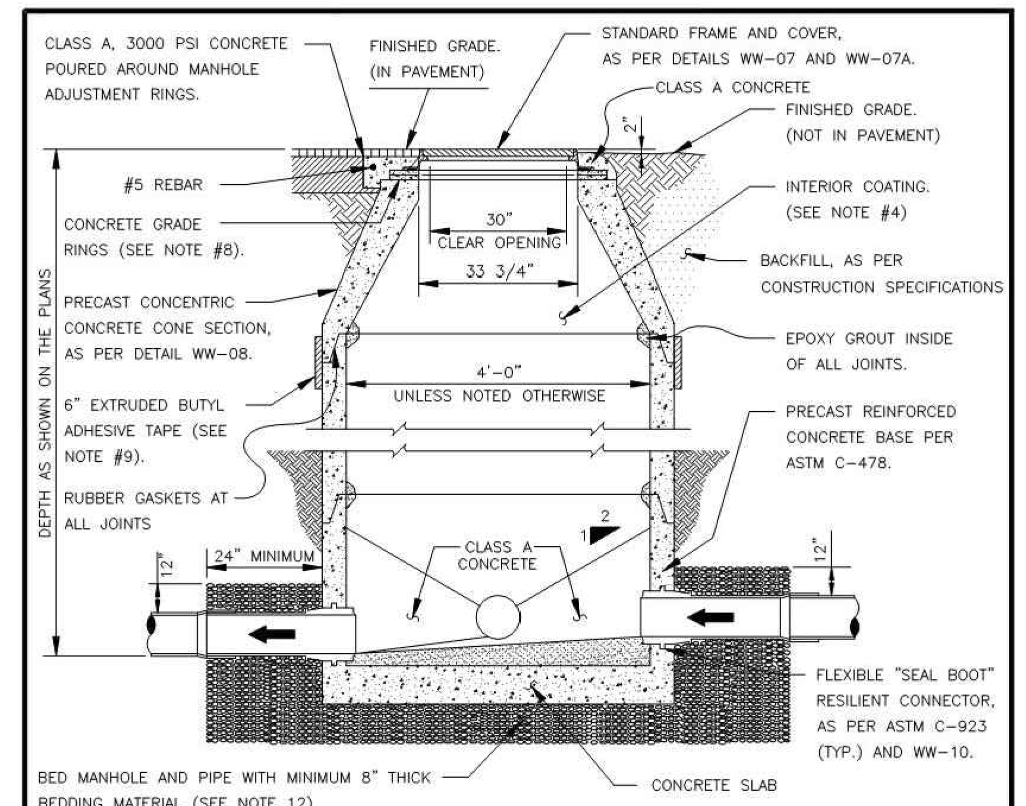

1. MANHOLES SHALL BE PRECAST ASTM C478 BELL AND SPIGOT WITH "O" RING JOINTS.
2. SEE CONSTRUCTION PLANS FOR MANHOLE SIZE, LOCATION, CONFIGURATION, TYPE OF TOP SECTION, VENTING REQUIREMENTS, PIPE SIZES AND TYPES.
3. SEE SPECIFICATIONS ON MATERIALS AND CONSTRUCTION.
4. ENTIRE INTERIOR OF WASTEWATER MANHOLES TO BE COATED WITH RAVEN 405, OR APPROVED EQUAL, WITH A UNIFORM THICKNESS OF 124 MILS AND A MINIMUM THICKNESS OF 100 MILS, APPLIED AFTER MANHOLE HAS PASSED THE VACUUM TEST.
5. ALL MANHOLE COVERS SHALL BE BOLTED AND GASKETED, WHEN MANHOLES ARE LOCATED OUTSIDE OF PAVEMENT.
6. MANHOLES TO BE VENTED ARE IDENTIFIED ON MANHOLE SCHEDULE, REFERENCE MANHOLE VENT DETAIL.
7. A FLOW CHANNEL SHALL BE CONSTRUCTED INSIDE MANHOLE TO DIRECT INFLUENT INTO THE FLOW STREAM. ALL P.V.C. PIPE SHALL BE REMOVED FROM INVERT.
8. FRAME ADJUSTMENT HEIGHT SHALL BE FIVE INCHES (5") MINIMUM AND EIGHTEEN INCHES (18") MAXIMUM.
9. EXTERIOR OF EACH JOINT TO BE WRAPPED IN 6" EXTRUDED BUTYL ADHESIVE TAPE WHEN MANHOLE IS LOCATED IN THE 100-YR FLOODPLAIN.
10. MANHOLES TO BE DESIGNED TO RESIST LATERAL AND VERTICAL SOIL FORCES RESULTING FROM MANHOLE DEPTH. ADDITIONALLY, MANHOLES LOCATED IN PAVEMENT TO BE DESIGNED FOR H20 TRAFFIC LOADING.
11. BASE SECTION SHALL BE DESIGNED FOR H-20 LOADING, PLUS EARTH LOAD AT 130 PCF.

12. MANHOLE BASE BEDDING MATERIAL SPECS. FOR 3/4" WASHED GRAVEL:

SIEVE SIZE	% RETAINED
2"	0
1 1/2"	0-10
1"	45-80
3/4"	85-100
3/8"	95-100

CITY OF HUTTO
CONSTRUCTION STANDARDS AND DETAILS
STANDARD MANHOLE - SECTION
HUTTO UTILITY SYSTEMS

DRAWING NO. WW-03
UPDATED: 09/30/10
DRAWN BY: MSL
SCALE: N.T.S.
FILE NAME: WW03.DWG

* THE MANHOLE BASE SECTION SHALL COMPLY WITH CITY OF GEORGETOWN TECHNICAL SPECIFICATIONS

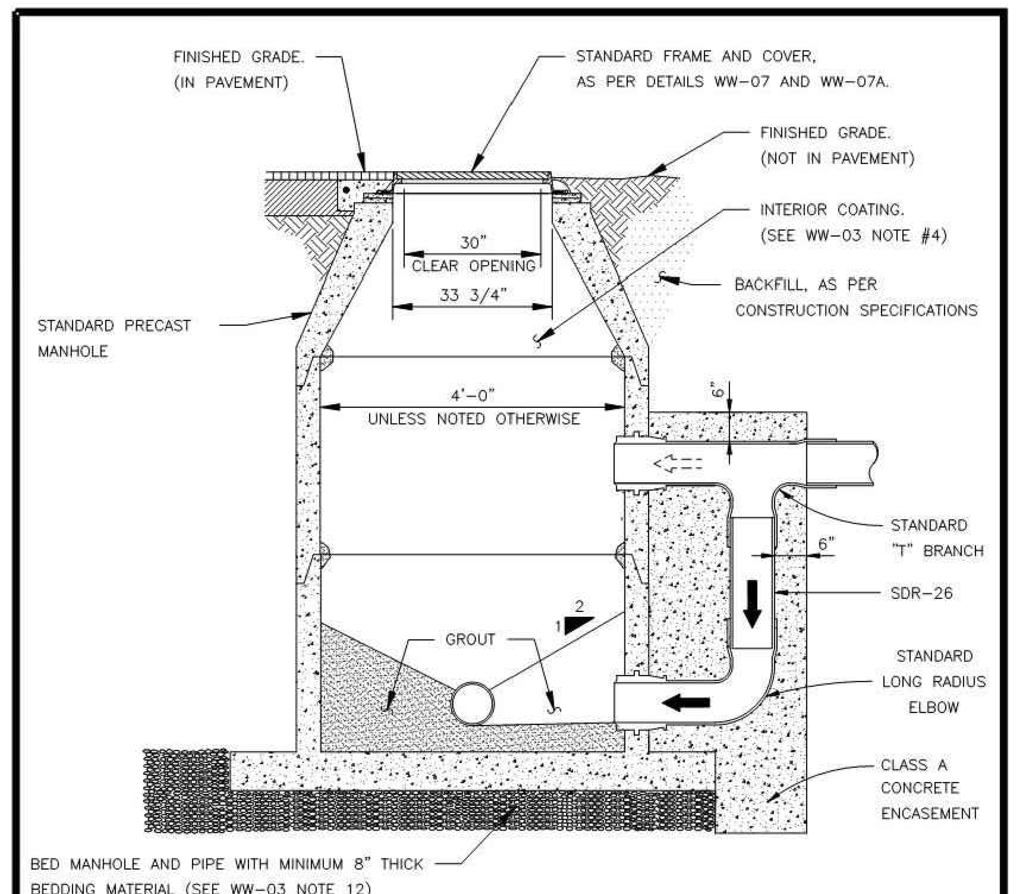

1. CONCRETE ENCASEMENT FOR DROP CONNECTION TO BE POURED INTEGRALLY WITH BOTH MANHOLE SLAB AND WALL.
2. DROP CONNECTIONS SHALL BE REQUIRED WHENEVER AN INFLUENT SEWER IS LOCATED TWO FEET (2') OR MORE ABOVE THE MAIN INVERT CHANNEL.
3. A FLOW CHANNEL SHALL BE CONSTRUCTED INSIDE MANHOLE TO DIRECT INFLUENT INTO FLOW STREAM.
4. MINIMUM PIPE SIZE FOR DROP IS EIGHT INCHES (8").
5. SEE STANDARD MANHOLE DETAIL (DWG. # WW-03) FOR ADDITIONAL REQUIREMENTS.

CITY OF HUTTO
CONSTRUCTION STANDARDS AND DETAILS
DROP CONNECTION-PRECAST MANHOLE TYPE "A"
HUTTO UTILITY SYSTEMS

DRAWING NO. WW-04
UPDATED: 09/23/10
DRAWN BY: MSL
SCALE: N.T.S.
FILE NAME: WW04.DWG

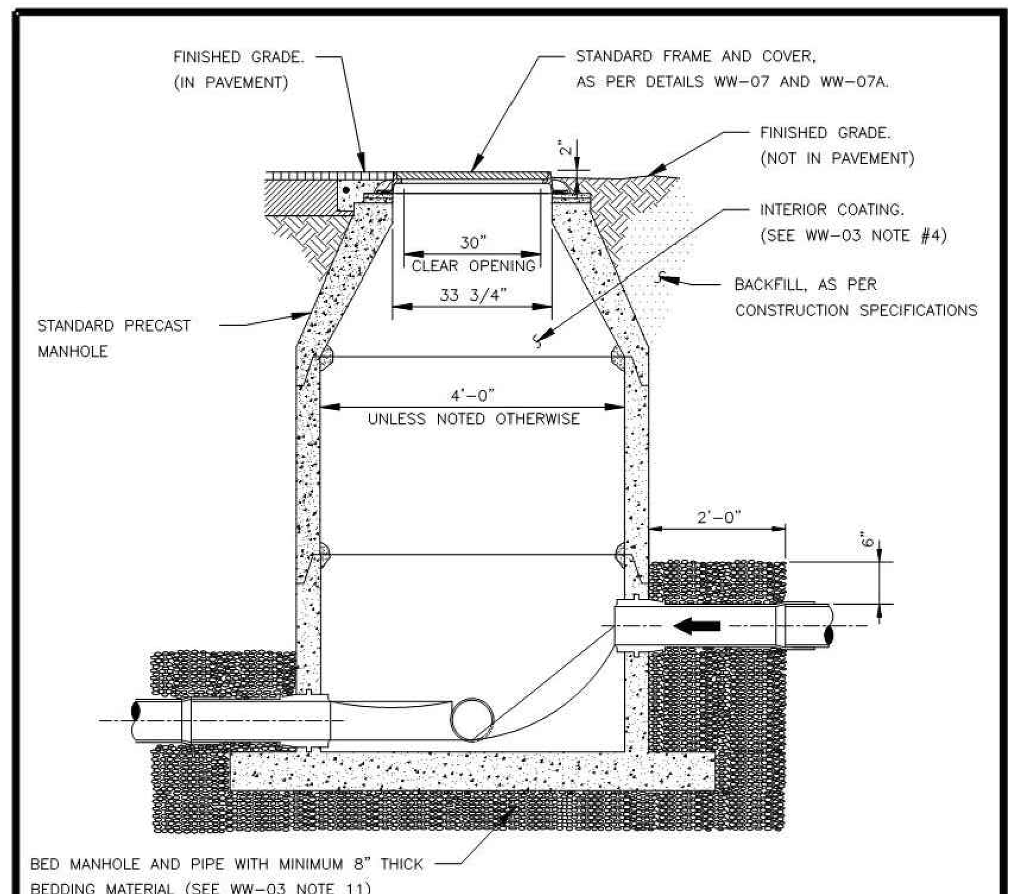

NOTES:

1. TO BE USED WHERE DROP IS SIX INCHES (6") TO TWO FEET (2'-0").
2. A FLOW CHANNEL SHALL BE CONSTRUCTED INSIDE MANHOLE TO DIRECT INFLUENT INTO FLOW STREAM.
3. CONSTRUCTION OF DROP SHALL PROVIDE A OVERSIZED SLAB TO EXTEND UNDER THE DROP CONNECTION.
4. MINIMUM PIPE SIZE FOR DROP IS EIGHT INCHES (8").
5. SEE STANDARD MANHOLE DETAIL (DWG. # WW-03) FOR ADDITIONAL REQUIREMENTS.

CITY OF HUTTO
CONSTRUCTION STANDARDS AND DETAILS
DROP CONNECTION-PRECAST MANHOLE TYPE "B"
HUTTO UTILITY SYSTEMS

DRAWING NO. WW-05
UPDATED: 09/23/10
DRAWN BY: MSL
SCALE: N.T.S.
FILE NAME: WW05.DWG

FLOW PATTERNS FOR INVERT CHANNELS

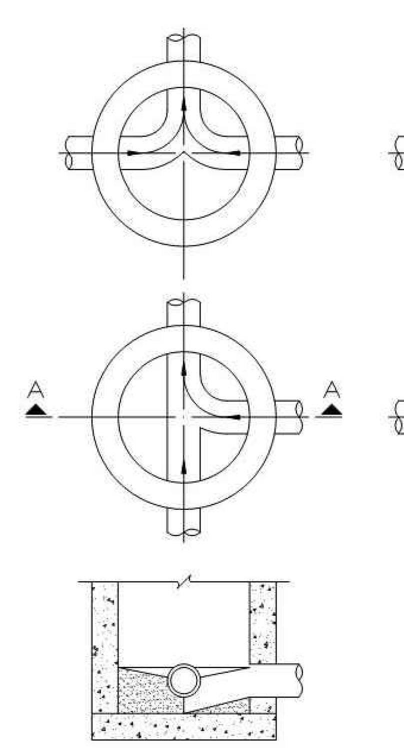

SECTION "A-A"

NOTES:

1. INVERT CHANNELS TO BE CONSTRUCTED FOR SMOOTH FLOW WITH NO OBSTRUCTIONS.
2. SPILLWAYS SHALL BE CONSTRUCTED BETWEEN PIPES WITH DIFFERENT INVERT ELEVATIONS PROVIDING FOR SMOOTH FLOW.
3. CHANNELS FOR FUTURE CONSTRUCTIONS (STUBS) SHALL BE CONSTRUCTED, FILLED WITH SAND, AND COVERED WITH 1" OF MORTAR.
4. SLOPE MANHOLE ITSELF WITH A 1:2 SLOPE FROM MANHOLE WALL TO CHANNEL.
5. INVERT SHALL BE A MINIMUM OF 1/2 THE DIAMETER OF THE LARGEST PIPE OR 4" DEEP.

CITY OF HUTTO
CONSTRUCTION STANDARDS AND DETAILS
FLOW PATTERNS FOR INVERT CHANNELS
HUTTO UTILITY SYSTEMS

DRAWING NO. WW-06
UPDATED: 06/01/09
DRAWN BY: xxx
SCALE: N.T.S.
FILE NAME: WW06.DWG

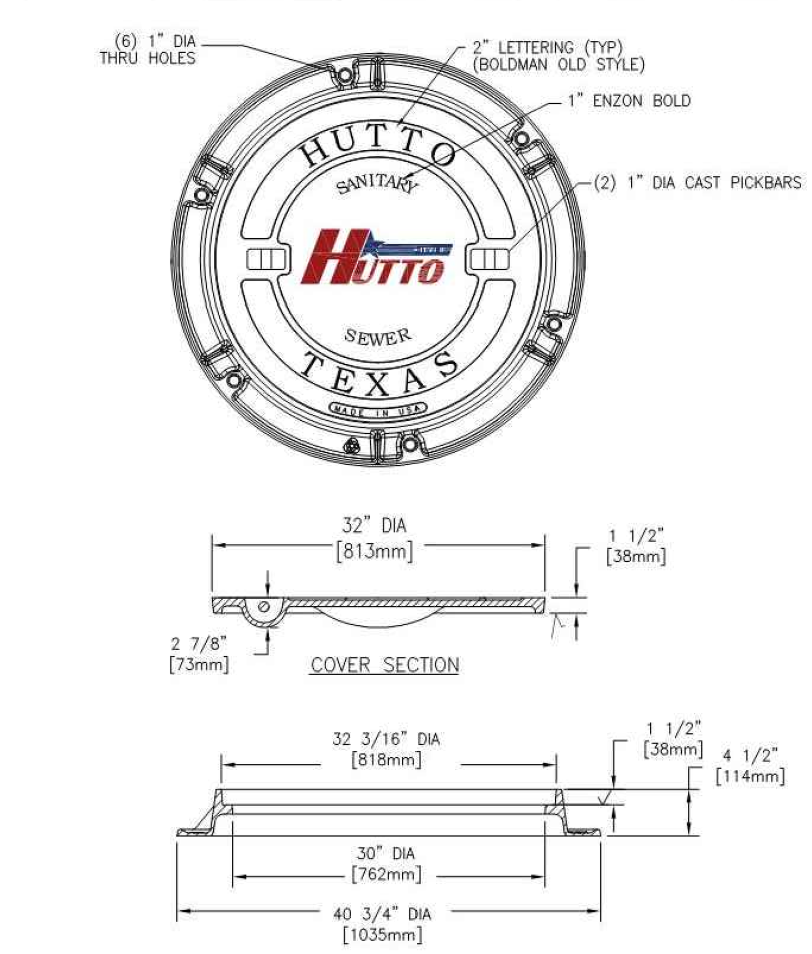

NOTES:

1. STANDARD WASTEWATER MANHOLE SET TO BE EAST JORDAN IRON WORKS, INC. CATALOG NO V1420RG/V1432DI OR CITY ENGINEER APPROVED EQUAL, COVER TO BE STAMPED "SANITARY SEWER."
2. STANDARD WASTEWATER MANHOLE SET TO BE HEAVY DUTY LOAD RATED.
3. FOR MORE DETAILED SPECIFICATIONS, REFER TO EAST JORDAN IRON WORKS, INC. REFERENCE PRODUCT DRAWING NO. 41432106A01.
4. FOR BOLTED WASTEWATER MANHOLE SET REFER TO CITY OF HUTTO DETAIL WW09.
5. MANHOLE COVER TO BE DUCTILE IRON PER ASTM A536 (70-50-05).
6. MANHOLE FRAME TO BE GRAY IRON PER ASTM A48 CL35B.

CITY OF HUTTO
CONSTRUCTION STANDARDS AND DETAILS
STANDARD WASTEWATER MANHOLE SET
ENGINEERING & PUBLIC WORKS

DRAWING NO. WW07
UPDATED: 04/01/2019
DRAWN BY: BB
SCALE: N.T.S.
FILE NAME:WW07.DWG

REV	DESCRIPTION	DATE	APR

DESIGNED BY: DAZ
REVIEWED BY: TMH
DRAWN BY: DAZ

BGE
BGE, INC.
1701 DIRECTORS BOULEVARD, SUITE 1000
AUSTIN, TX 78744
TBPE Registration No. F-1046
TEL: 512-879-0400 www.browngay.com

COTTONWOOD CREEK, PHASE II
HUTTO, TEXAS

WASTEWATER DETAILS (1 OF 3)

SUBMITTAL DATE: 03-15-2021

STATE OF TEXAS
TIMOTHY M. HOLLAND
94848
LICENSED PROFESSIONAL ENGINEER
07/08/2021

SHEET
46 OF 54

G:\TXC\Projects\Lennar\8390-00-Cottonwood_PH2\LD\01_CADD\01_Shts\C-SP-DETL-PH-2.dwg Layout: WASTEWATER DETAILS (1 OF 3) Plotted: 7/8/2021 3:07:06 PM

Record Drawing

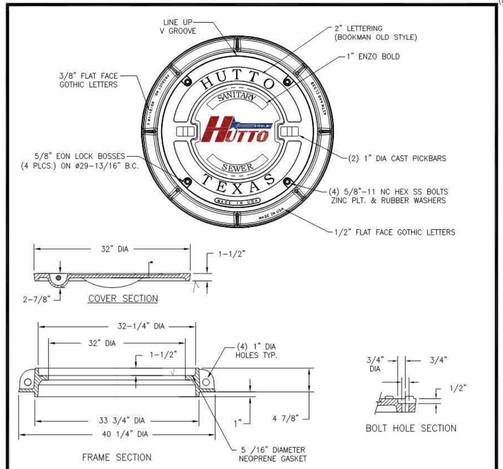

NOTES:
1. BOLTED WASTEWATER MANHOLE SET TO BE EAST JORDAN IRON WORKS, INC. CATALOG NO. B2432, OR CITY ENGINEER APPROVED EQUAL.
2. COVER TO BE STAMPED "SANITARY SEWER".
3. STANDARD WASTEWATER MANHOLE SET TO BE HEAVY DUTY LOAD RATED.
4. FOR MORE DETAILED SPECIFICATIONS, REFER TO EAST JORDAN IRON WORKS, INC. REFERENCE PRODUCT DRAWING 424321159W01.
5. FOR STANDARD WASTEWATER MANHOLE SET REFER TO COH DETAIL WW08.
6. MANHOLE COVER TO BE DUCTILE IRON PER ASTM A536 (70-50-05).
7. MANHOLE FRAME TO BE GRAY IRON PER ASTM A48 CL35B.

CITY OF HUTTO CONSTRUCTION STANDARDS AND DETAILS	DRAWING NO.	WW7A
	UPDATED:	02/01/2019
BOLTED WASTEWATER MANHOLE COVER	DRAWN BY:	BB
ENGINEERING & PUBLIC WORKS	SCALE:	N.T.S.
	FILE NAME:	WW7A.DWG

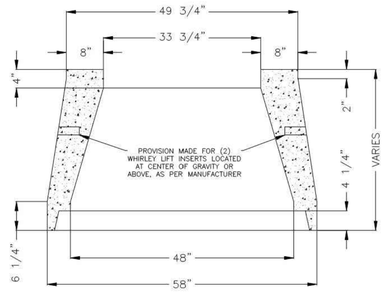

CITY OF HUTTO CONSTRUCTION STANDARDS AND DETAILS	DRAWING NO.	WW-08
	UPDATED:	09/13/16
PRECAST 48" CONCENTRIC CONCRETE CONE SECTION DETAIL	DRAWN BY:	MSL
HUTTO UTILITY SYSTEMS	SCALE:	N.T.S.
	FILE NAME:	WW08.DWG

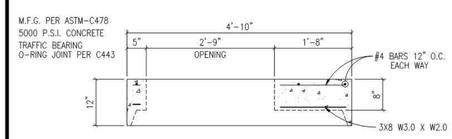

NOTES:
1. AVAILABLE WITH CAST IRON RING AND COVER CAST IN PLACE.
2. PERMITTED ONLY WITH WRITTEN APPROVAL.

CITY OF HUTTO CONSTRUCTION STANDARDS AND DETAILS	DRAWING NO.	WW-09
	UPDATED:	09/23/10
48" MANHOLE FLAT LID	DRAWN BY:	MSL
HUTTO UTILITY SYSTEMS	SCALE:	N.T.S.
	FILE NAME:	WW09.DWG

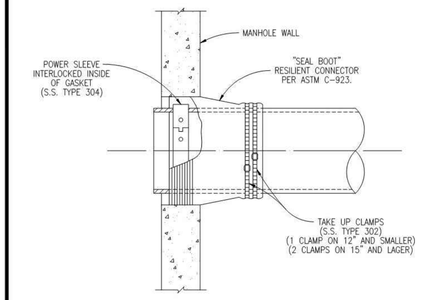

CITY OF HUTTO CONSTRUCTION STANDARDS AND DETAILS	DRAWING NO.	WW-10
	UPDATED:	06/01/09
FLEXIBLE "SEAL BOOT" CONNECTOR	DRAWN BY:	xxx
HUTTO UTILITY SYSTEMS	SCALE:	N.T.S.
	FILE NAME:	WW10.DWG

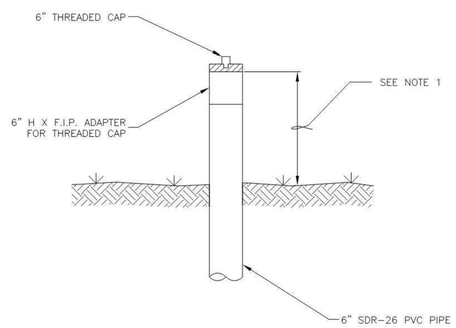

NOTES:
1. MINIMUM 24", MAXIMUM 36" ABOVE FINISHED GRADE. (ADJUSTMENT TO FINISHED GRADE SHALL OCCUR PRIOR TO ACCEPTANCE OR ISSUANCE OF CERTIFICATE OF OCCUPANCY)
2. FOR CLEAN-OUTS LOCATED IN CONCRETE SURFACES, SEE CITY OF AUSTIN DETAIL 520S-4.

CITY OF HUTTO CONSTRUCTION STANDARDS AND DETAILS	DRAWING NO.	WW-12
	UPDATED:	10/9/12
SEWER CLEAN-OUT DETAIL	DRAWN BY:	MSL
HUTTO UTILITY SYSTEMS	SCALE:	N.T.S.
	FILE NAME:	WW12.DWG

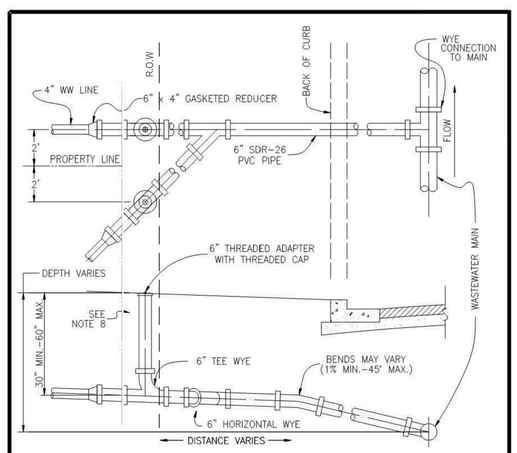

NOTES:
1. SUBDIVISION IMPROVEMENTS WILL END AT ROW WITH PLUGGED WATER-TIGHT CLEAN-OUT.
2. DURING LOT CONSTRUCTION, PLUG WILL BE REMOVED AND 6"x4" ELASTOMERIC GASKETED BELL REDUCER INSTALLED. BUSHINGS ARE NOT ALLOWED.
3. SOLIDLY TAMP BACKFILL AT LEAST ONE FOOT (1'-0") ABOVE TOP OF PIPE. SERVICES UNDER PAVED AREAS SHALL BE BACKFILLED TO THE SAME SPECIFICATIONS AS SHOWN ON PAVEMENT REPLACEMENT DETAIL.
4. CONTRACTOR SHALL MARK ON A CLEAN SET OF PLANS THE FINAL STATIONING OR DISTANCE AND DIRECTION FROM MANHOLE TO EACH SERVICE LATERAL AND GIVE TO ENGINEER FOR RECORD DRAWING PURPOSES.
5. SERVICE LINE MATERIAL SHALL BE P.V.C., SDR-26.
6. CITY OF HUTTO RESPONSIBILITY ENDS AT THE CLEANOUT.
7. NO CLEAN-OUT SHALL BE SET IN SIDEWALK OR DRIVEWAY WITHOUT WRITTEN APPROVAL FROM CITY ENGINEER.
8. SEE CITY OF AUSTIN DETAIL 520S-4 FOR INSTALLATIONS IN CONCRETE SURFACES, CITY OF HUTTO DETAIL WW-12 FOR ALL OTHERS.

CITY OF HUTTO CONSTRUCTION STANDARDS AND DETAILS	DRAWING NO.	WW-13
	UPDATED:	11/07/17
SEWER SERVICE CONNECTIONS	DRAWN BY:	MSL
HUTTO UTILITY SYSTEMS	SCALE:	N.T.S.
	FILE NAME:	WW13.DWG

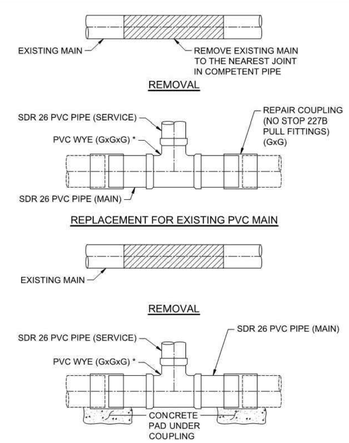

NOTES
1. ALL WASTEWATER PIPING SHALL HAVE ELASTOMERIC GASKET TYPE JOINTS AND SLOPE DOWNWARD TO MAIN ONE PERCENT (1%) MINIMUM TO FORTY-FIVE PERCENT (45%) MAXIMUM.
2. DEPTH OF SERVICE AT PROPERTY LINE WILL BE SHOWN ON PLANS BY ENGINEER IF GREATER THAN FOUR FEET (4'), OTHERWISE THE INSTALLED DEPTH WILL BE FOUR FOOT (4') MINIMUM AND SIX FEET (6') MAXIMUM AT PROPERTY LINE.
3. REPLACE THE BEDDING AND BACKFILL IN ACCORDANCE WITH THE TRENCH EMBEDMENT DETAIL.

CITY OF HUTTO CONSTRUCTION STANDARDS AND DETAILS	DRAWING NO.	WW-13A
	UPDATED:	01/17/18
GASKETED SEWER FITTING FOR SEWER SERVICE CONNECTIONS TO EXISTING MAINS	DRAWN BY:	BB
HUTTO UTILITY SYSTEMS	SCALE:	N.T.S.
	FILE NAME:	WW13A.DWG

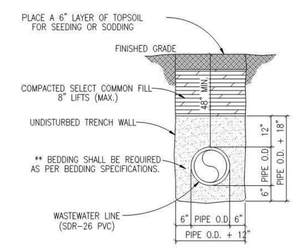

** TYPICAL BEDDING SPECIFICATIONS:

SIEVE SIZE	3/8" F % RETAINED	1/2" D % RETAINED	WASHED GRAVEL % RETAINED
1/2"	0	0	0
3/8"	0-2	5-25	-
4m	40-85	80-100	-
10m	95-100	96-100	-
3/4"	-	-	100

CITY OF HUTTO CONSTRUCTION STANDARDS AND DETAILS	DRAWING NO.	WW-16
	UPDATED:	06/01/09
TRENCH AND EMBEDMENT DETAIL UNDER NON-PAVED AREAS	DRAWN BY:	CL
HUTTO UTILITY SYSTEMS	SCALE:	N.T.S.
	FILE NAME:	WW16.DWG

REV	DESCRIPTION	DATE	APR

DESIGNED BY: DAZ
REVIEWED BY: TMH
DRAWN BY: DAZ

BGE, INC.
1701 DIRECTORS BOULEVARD, SUITE 1000
AUSTIN, TX 78744
TBPE Registration No. F-1046
TEL: 512-879-0400 www.bgeinc.com

COTTONWOOD CREEK, PHASE II
HUTTO, TEXAS

WASTEWATER DETAILS (2 OF 3)

SUBMITTAL DATE: 03-15-2021

STATE OF TEXAS
TIMOTHY M. HOLLAND
94548
LICENSED PROFESSIONAL ENGINEER
07/08/2021

SHEET
47 OF 54

Record Drawing

G:\TXCI\Projects\Lennar\8399-00-Cottonwood_PH2\LDV01_CADD\01_Shts\C-SP-DETL-PH-2.dwg Layout: WASTEWATER DETAILS (2 OF 3) Plotted: 7/7/2021 4:56:54 PM

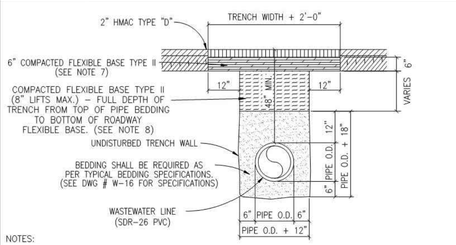

NOTES:

1. REPLACED BASE MATERIAL OVER DITCH SHALL BE TWICE THE THICKNESS OF THE ORIGINAL BASE.
2. BASE MATERIAL SHALL BE PLACED IN TWO OR THREE LAYERS AND EACH LAYER THOROUGHLY ROLLED OR TAMPED TO SPECIFIED MAXIMUM DENSITY.
3. ASPHALT CONCRETE PAVEMENT JOINTS SHALL BE MECHANICALLY SAWED.
4. SURFACE MATERIAL WILL BE CONSISTENT WITH THE EXISTING SURFACE.
5. A MINIMUM OF ONE DENSITY TEST SHALL BE TAKEN EVERY TWO HUNDRED (200) FEET FOR EACH SIX (6) INCH LIFT OF SUBGRADE AND EACH OPEN CUT CROSSING. PROCTORS FOR MATERIALS USED IN BACKFILLING SHALL BE OBTAINED BY A CERTIFIED LABORATORY. DENSITY TESTS SHALL BE CONDUCTED BY A CERTIFIED LABORATORY OR THE PERMITTEE'S CONSULTANTS. THE PERCENTAGE OF MAXIMUM DENSITY REQUIRED SHALL BE IN ACCORDANCE WITH THE LATEST EDITION OF "THE DEPARTMENT OF TRANSPORTATION STANDARD SPECIFICATIONS FOR ROAD AND BRIDGE CONSTRUCTION" AT THE TIME THE PERMIT WAS ISSUED. ALL DENSITY TESTS SHALL BE COMPLETED AND ACCEPTED ON EACH LAYER PRIOR TO ADDITIONAL BACKFILLING. A COPY OF ALL COMPLETED AND ACCEPTED DENSITY TESTS SHALL BE FURNISHED TO CITY OF HUTTO.
6. THESE SPECIFICATIONS MAY BE SUPERSEDED BY THE GOVERNING AGENCY.
7. FLEXIBLE BASE TYPE II: (ROADWAY BASE)
   TxDOT TYPE A – GRADE 2 OR BETTER CRUSHED LIMESTONE BASE COMPACTED TO 98% OF TxDOT 113E AT OPTIMUM MOISTURE. PROCTOR TO BE PROVIDED BY THE CONTRACTOR TO THE CITY INSPECTOR.
8. FLEXIBLE BASE TYPE II: (TRENCH BACKFILL)
   TxDOT TYPE A – GRADE 2 OR BETTER CRUSHED LIMESTONE BASE COMPACTED TO 95% OF TxDOT 113E AT OPTIMUM MOISTURE. PROCTOR TO BE PROVIDED BY THE CONTRACTOR TO THE CITY INSPECTOR.
9. CONTRACTOR OR ENGINEER MAY REQUEST FOR USE OF ALTERNATE BACKFILL MATERIAL. ALTERNATE MATERIALS AND TESTING PROTOCOL MUST BE SUBMITTED TO AND APPROVED BY THE CITY ENGINEER PRIOR TO USE.

CITY OF HUTTO CONSTRUCTION STANDARDS AND DETAILS	DRAWING NO. WW-17	
TRENCH AND EMBEDMENT AND PAVEMENT REPLACEMENT DETAIL UNDER EXISTING ROADWAY HUTTO UTILITY SYSTEMS	UPDATED: 06/01/09	
	DRAWN BY: xxx	
	SCALE: N.T.S.	
	FILE NAME: WW17.DWG	

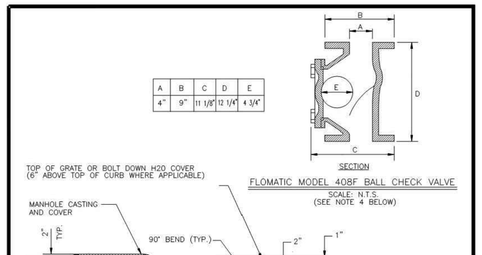

A	B	C	D	E
4"	9"	11 1/8"	12 1/4"	4 3/4"

FLOMATIC MODEL 408F BALL CHECK VALVE
SCALE: N.T.S.
(SEE NOTE 4 BELOW)

NOTES:

1. AIR INTAKE PIPE TO BE D.I.P., CLASS 53 WITH FLANGED CONNECTIONS.
2. ALL FITTINGS TO BE 150 PSIG RATED & ANSI/AWWA C110/A21.10.
3. SURFACE PREP ABOVE GROUND PIPING TO SSPC10-63, N.A.C.E. NO.2 STANDARD. APPLY EPOXY PRIMER 2-4 MIL, DFT FOLLOWED BY 2 COATS OF AMINE ADDUCT CURED, HIGH-BUILD EPOXY (TWO COMPONENT EPOXY POLYAMIDE) 8-10 MIL DFT, NON-LEAD CEDAR GREEN COLOR.
4. IF ELEVATION OF VENT OPENING IS LESS THAN 1-FT. ABOVE 100 YR. FLOODPLAIN, FLOMATIC MODEL 408F BALL CHECK VALVE OR EQUAL WITH FLOATING TYPE BALL TO BE INSTALLED AT DOWNTURNED OPENING OF VENT. (SEE DIMENSIONAL DETAIL ABOVE RIGHT). 16 MESH 304 S.S. INSECT SCREEN TO BE PLACED IN THE OPENING.

CITY OF HUTTO CONSTRUCTION STANDARDS AND DETAILS	DRAWING NO. WW-18	
MANHOLE VENT FOR BELOW GROUND INSTALLATION HUTTO UTILITY SYSTEMS	UPDATED: 09/28/10	
	DRAWN BY: XXX	
	SCALE: N.T.S.	
	FILE NAME: WW18.DWG	

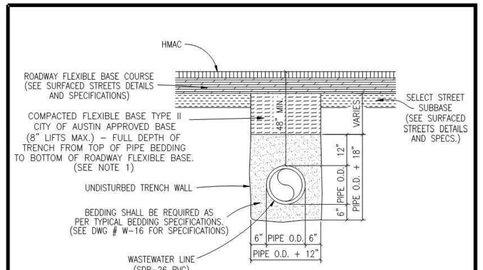

NOTES:

1. A MINIMUM OF ONE DENSITY TEST SHALL BE TAKEN EVERY TWO HUNDRED (200) FEET FOR EACH EIGHT (8) INCH LIFT OF BASE. PROCTORS FOR MATERIALS USED IN BACKFILLING SHALL BE OBTAINED BY A CERTIFIED LABORATORY. DENSITY TESTS SHALL BE CONDUCTED BY A CERTIFIED LABORATORY OR THE PERMITTEE'S CONSULTANTS. THE PERCENTAGE OF MAXIMUM DENSITY REQUIRED SHALL BE IN ACCORDANCE WITH THE LATEST EDITION OF "THE DEPARTMENT OF TRANSPORTATION STANDARD SPECIFICATIONS FOR ROAD AND BRIDGE CONSTRUCTION" AT THE TIME THE PERMIT WAS ISSUED. ALL DENSITY TESTS SHALL BE COMPLETED AND ACCEPTED ON EACH LAYER PRIOR TO ADDITIONAL BACKFILLING. A COPY OF ALL COMPLETED AND ACCEPTED DENSITY TESTS SHALL BE FURNISHED TO CITY OF HUTTO. BACKFILL COMPACTION SHALL BE A MINIMUM OF 95% MAXIMUM DENSITY PER TxDOT 113E SPECIFICATIONS.
2. THESE SPECIFICATIONS MAY BE SUPERSEDED BY THE GOVERNING AGENCY.
3. CONTRACTOR OR ENGINEER MAY REQUEST FOR USE OF ALTERNATE BACKFILL MATERIAL. ALTERNATE MATERIALS AND TESTING PROTOCOL MUST BE SUBMITTED TO AND APPROVED BY THE CITY PRIOR TO USE.

CITY OF HUTTO CONSTRUCTION STANDARDS AND DETAILS	DRAWING NO. WW-19	
TRENCH AND EMBEDMENT DETAIL UNDER PROPOSED ROADWAY ENGINEERING & PUBLIC WORKS	UPDATED: 06/01/18	
	DRAWN BY: BB	
	SCALE: N.T.S.	
	FILE NAME: WW19.DWG	

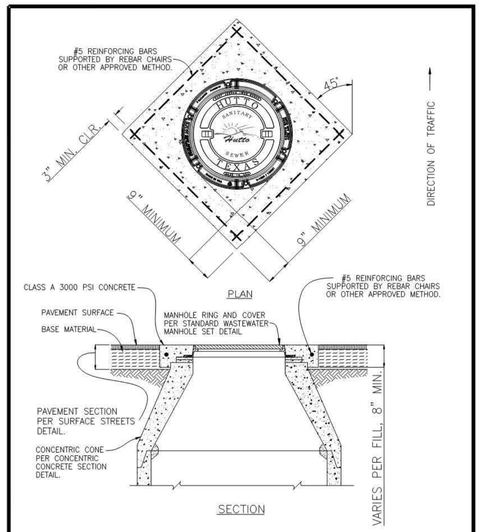

CITY OF HUTTO CONSTRUCTION STANDARDS AND DETAILS	DRAWING NO. WW-20	
CONCRETE APRON AROUND MANHOLE RING AND COVER HUTTO UTILITY SYSTEMS	UPDATED: 10/10/10	
	DRAWN BY: MSL	
	SCALE: N.T.S.	
	FILE NAME: WW20.DWG	

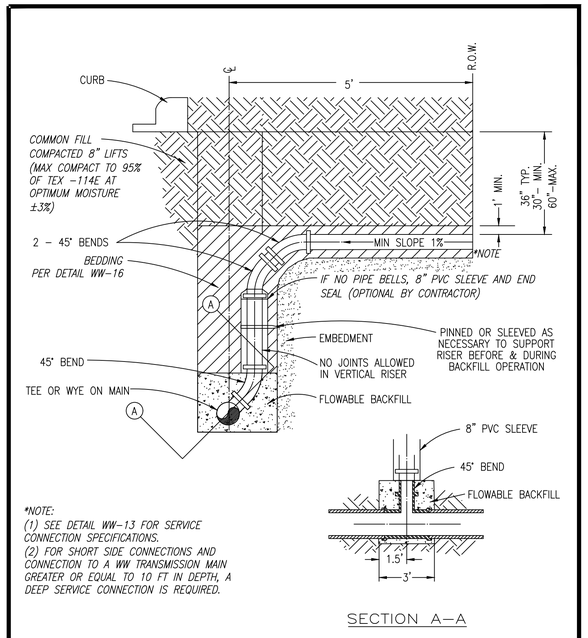

*NOTE:
(1) SEE DETAIL WW-13 FOR SERVICE CONNECTION SPECIFICATIONS.
(2) FOR SHORT SIDE CONNECTIONS AND CONNECTION TO A WW TRANSMISSION MAIN GREATER OR EQUAL TO 10 FT IN DEPTH, A DEEP SERVICE CONNECTION IS REQUIRED.

ISSUE DATE: MAY 2015		
REVISIONS		
05/14/15	DF	RV
DATE	APPROVED	DRAWN
SCALE: N.T.S.		

CITY OF PFLUGERVILLE	DWG. # WW-19
WASTEWATER DEEP SERVICE CONNECTION DETAIL	WW19.DWG
CONSTRUCTION STANDARDS AND DETAILS	

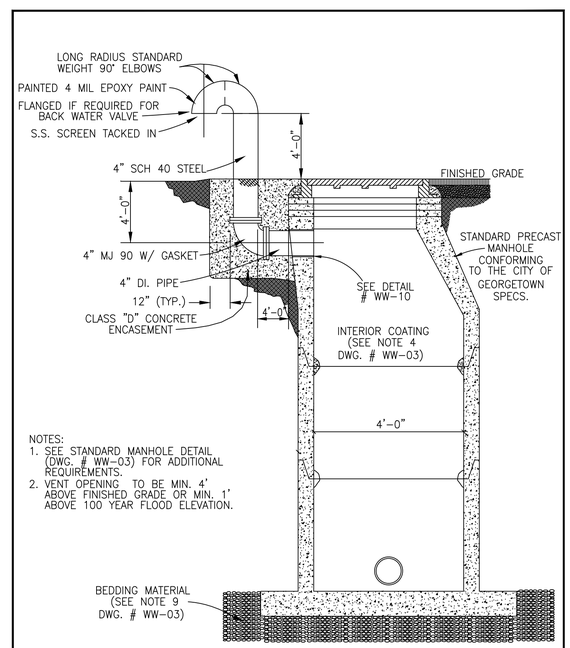

NOTES:
1. SEE STANDARD MANHOLE DETAIL (DWG. # WW-03) FOR ADDITIONAL REQUIREMENTS.
2. VENT OPENING TO BE MIN. 4' ABOVE FINISHED GRADE OR MIN. 1' ABOVE 100 YEAR FLOOD ELEVATION.

The Architect/Engineer assumes responsibility for appropriate use of this standard.

CITY OF GEORGETOWN CONSTRUCTION STANDARDS AND DETAILS	REVISION NOTE: ADOPTED 6/21/2006	
TYPICAL MANHOLE WITH VENT	DRAWING NAME: WW19	
	SCALE: NTS	DATE: 11/2003
	DRAWN BY: MRS	APPROVED BY: TRB

REV	DESCRIPTION	DATE	APR

DESIGNED BY: DAZ
REVIEWED BY: TMH
DRAWN BY: DAZ

BGE, INC.
1701 DIRECTORS BOULEVARD, SUITE 1000
AUSTIN, TX 78744
TBPE Registration No. F-1046
TEL: 512-879-0400 www.browngay.com

COTTONWOOD CREEK, PHASE II
HUTTO, TEXAS

WASTEWATER DETAILS (3 OF 3)

SUBMITTAL DATE: 03-15-2021

STATE OF TEXAS
TIMOTHY M. HOLLAND
94546
LICENSED PROFESSIONAL ENGINEER
07/08/2021

SHEET
48 OF 54

G:\TXC\Projects\Lennar\8399-00-Cottonwood_PH2\LDV01_CADD\01_Shts\C-SP-DETL_PH-2.dwg Layout: WASTEWATER DETAILS (3 OF 3) Plotted: 7/7/2021 4:56:56 PM
Record Drawing

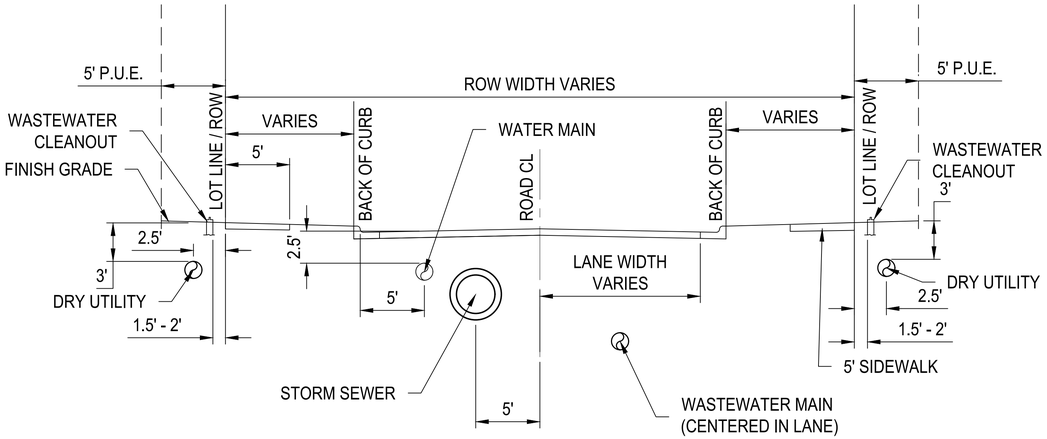

TYPICAL UTILITY CROSS SECTION

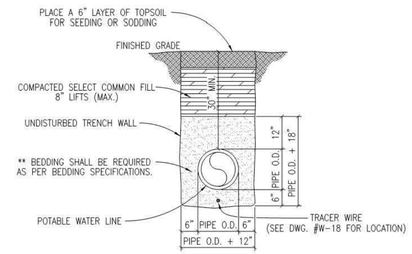

** TYPICAL BEDDING SPECIFICATIONS:

SIEVE SIZE	3/8" F % RETAINED	1/2" D % RETAINED	WASHED GRAVEL % RETAINED
1/2"	0	0	0
3/8"	0–2	5–25	–
4m	40–85	80–100	–
10m	95–100	96–100	–
3/4"	–	–	100

CITY OF HUTTO
CONSTRUCTION STANDARDS AND DETAILS
TRENCH AND EMBEDMENT DETAIL UNDER NON-PAVED AREAS
HUTTO UTILITY SYSTEMS

DRAWING NO. W-02
UPDATED: 06/01/09
DRAWN BY: CL
SCALE: N.T.S.
FILE NAME: W02.DWG

METER BOX SCHEDULE	
METER SIZE	METER BOX*
5/8"	DFW36C-KSBSM
3/4"	DFW36C-KSBSM
1"	DFW37C-KSBSM
1 1/2"	DFW65C-12-KSBSM
2"	DFW1730-18-KSBSM

* OR APPROVED EQUAL

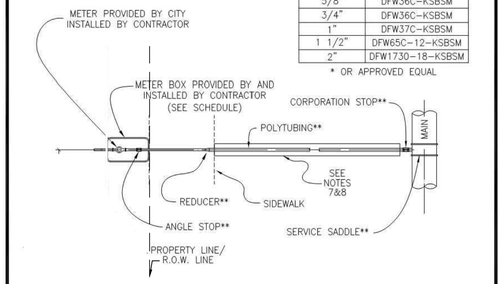

** = SEE DETAIL W-24 FOR PARTS LISTINGS

NOTES:
1. STANDARD PARTS LIST FOUND ON DETAIL W-24.
2. SERVICE LINE TO REDUCE UNDER SIDEWALK (SEE W-24 & W-26).
3. ANGLE STOPS SHALL BE SIZED TO MATCH SERVICE & METER SIZE.
4. 1" ANGLE STOPS WITH 3/4" VALVES SHALL NOT BE PERMITTED.
5. MULTIPLE SERVICE/METER INSTALLATIONS OF MORE THAN 4 METERS PER SERVICE AND SERVICE LINES LARGER THAN 2" IN DIAMETER SHALL BE HANDLED ON AN INDIVIDUAL BASIS.
6. ANGLE STOPS 1 1/2" AND 2" IN SIZE SHALL BE PROVIDED WITH BOTH A LOCKING CAP AND METER FLANGE.
7. BEDDING MATERIAL PER CONSTRUCTION SPECIFICATIONS.
8. CASING REQUIREMENTS FOR SERVICE LINES CROSSING ROADWAYS SEE DETAIL W-26.
9. ANY VARIATIONS ON FITTINGS MUST BE APPROVED BY THE CITY ENGINEER.
10. ALL SERVICE LINES SHALL BE PLACED PERPENDICULAR TO ROADWAY.

CITY OF HUTTO
CONSTRUCTION STANDARDS AND DETAILS
SINGLE WATER SERVICE - PLAN
HUTTO UTILITY SYSTEMS

DRAWING NO. W-04
UPDATED: 11/11/11
DRAWN BY: MSL
SCALE: N.T.S.
FILE NAME: W04.DWG

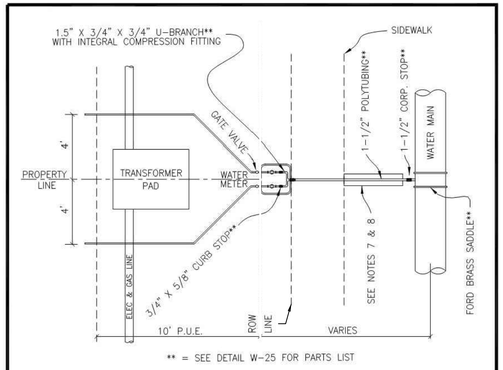

** = SEE DETAIL W-25 FOR PARTS LIST

NOTES:
1. AUTHORIZED SERVICE LINE MATERIAL: 1.5" POLYETHYLENE TUBING SDR 9, CLASS 200
2. ANGLE STOP SIZE SHALL MATCH U-BRANCH AND METER.
3. 1" ANGLE STOPS WITH 3/4" VALVES SHALL NOT BE PERMITTED.
4. MULTIPLE SERVICE/METER INSTALLATIONS OF MORE THAN 4 METERS PER SERVICE AND SERVICE LINES LARGER THAN 2" IN DIAMETER SHALL BE HANDLED ON AN INDIVIDUAL BASIS.
5. ANGLE STOPS 1 1/2" AND 2" IN SIZE SHALL BE PROVIDED WITH BOTH A LOCKING CAP AND METER FLANGE.
6. ANGLE STOPS SHALL BE INSTALLED 8" BELOW FINISHED GRADE AND MARKED WITH A 2" X 2" X 48" TREATED WOOD STAKE, PAINTED BLUE.
7. BEDDING ENVELOPE AND MATERIAL PER CONSTRUCTION SPECIFICATIONS.
8. CASING REQUIREMENTS FOR SERVICE LINES CROSSING ROADWAYS SEE DETAIL W-26.
9. ANY VARIATIONS ON FITTINGS MUST BE APPROVED BY THE CITY.

CITY OF HUTTO
CONSTRUCTION STANDARDS AND DETAILS
DOUBLE WATER SERVICE - PLAN
HUTTO UTILITY SYSTEMS

DRAWING NO. W-05
UPDATED: 11/11/11
DRAWN BY: MSL
SCALE: N.T.S.
FILE NAME: W05.DWG

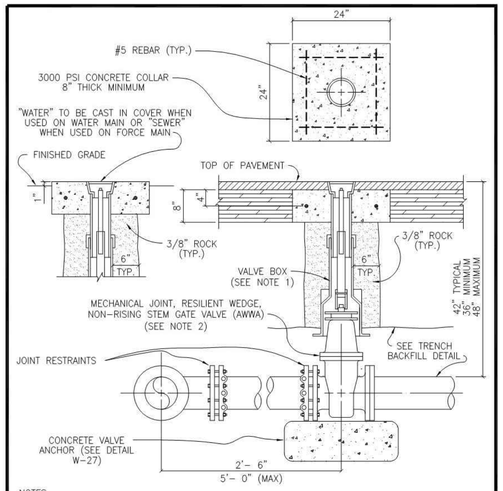

NOTES:
1. VALVE BOX SHALL BE AMERICAN FLOW CONTROL TRENCH ADAPTER OR APPROVED EQUAL HAVING AN ADJUSTABLE RANGE OF + OR – 6 INCHES FROM INSTALLED FINISH GRADE.
2. ACCEPTABLE GATE VALVES ARE:
   A. AMERICAN FLOW CONTROL – SERIES 2500
   B. MUELLER – 2360 SERIES
   C. CLOW

CITY OF HUTTO
CONSTRUCTION STANDARDS AND DETAILS
TYPICAL VALVE SETTING
HUTTO UTILITY SYSTEMS

DRAWING NO. W-07
UPDATED: 11/11/11
DRAWN BY: MSL
SCALE: N.T.S.
FILE NAME: W07.DWG

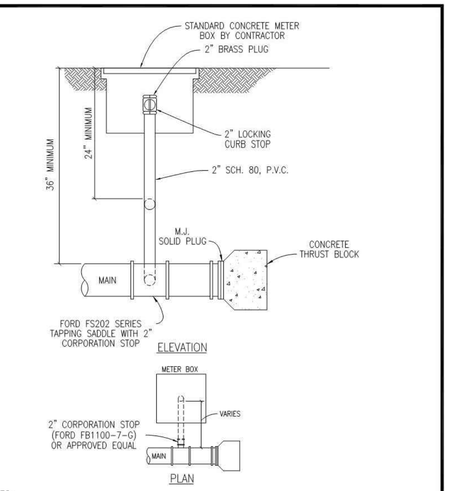

NOTES:
1. TRAFFIC BEARING METER BOXES WILL BE REQUIRED IN ALL PAVED AREAS AND AREAS WHICH MAY BE PAVED IN THE FUTURE.
2. TUBING SHALL BE CONTINUOUS FROM CORPORATION STOP TO CURB STOP, NO FITTINGS SHALL BE PERMITTED.

CITY OF HUTTO
CONSTRUCTION STANDARDS AND DETAILS
STANDARD BLOW-OFF
HUTTO UTILITY SYSTEMS

DRAWING NO. W-09
UPDATED: 11/11/11
DRAWN BY: xxx
SCALE: N.T.S.
FILE NAME: W09.DWG

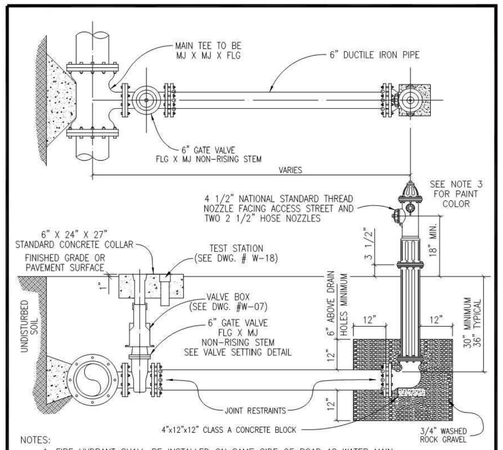

NOTES:
1. FIRE HYDRANT SHALL BE INSTALLED ON SAME SIDE OF ROAD AS WATER MAIN.
2. FIRE HYDRANT SHALL BE INSTALLED PLUMB AND TRUE.
3. ALL FIRE HYDRANT EXTERIORS SHALL BE FACTORY PRIMED AND PAINTED SILVER USING A HIGH GRADE ENAMEL. HYDRANT BONNET TO BE PRIMED ONLY.
4. HEEL AND THRUST BLOCKS TO REST IN UNDISTURBED SOIL.
5. THE ONLY FIRE HYDRANTS ACCEPTABLE ARE:
   A. KENNEDY – K81D
   B. AMERICAN DARLING – B84B
   C. CLOW – MEDALLION
6. DOUBLE BLUE REFLECTOR "HYE-LITES" BRAND, MANUFACTURED BY PAVEMENT MARKERS INC. TO BE INSTALLED AT CENTERLINE OF STREET PERPENDICULAR TO HYDRANT.

CITY OF HUTTO
CONSTRUCTION STANDARDS AND DETAILS
TYP. FIRE HYDRANT INSTALLATION
HUTTO UTILITY SYSTEMS

DRAWING NO. W-10
UPDATED: 11/11/11
UPDATED BY: MSL
SCALE: N.T.S.
FILE NAME: W10.DWG

REV	DESCRIPTION	DATE	APR

DESIGNED BY: DAZ
REVIEWED BY: TMH
DRAWN BY: DAZ

BGE
BGE, INC.
1701 DIRECTORS BOULEVARD, SUITE 1000
AUSTIN, TX 78744
TBPE Registration No. F-1046
TEL: 512-879-0400 www.bowengay.com

COTTONWOOD CREEK, PHASE II
HUTTO, TEXAS

WATER DETAILS (1 OF 4)

SUBMITTAL DATE: 03-15-2021

STATE OF TEXAS
TIMOTHY M. HOLLAND
94848
LICENSED PROFESSIONAL ENGINEER
07/08/2021

SHEET
49 OF 54

Record Drawing

G:\TXCI\Projects\Lennar\8399-00-Cottonwood_PH2\LD\01_CADD\01_Shts\C-SP-DETL-PH-2.dwg Layout: WATER DETAILS (1 OF 4) Plotted: 7/8/2021 3:33:44 PM

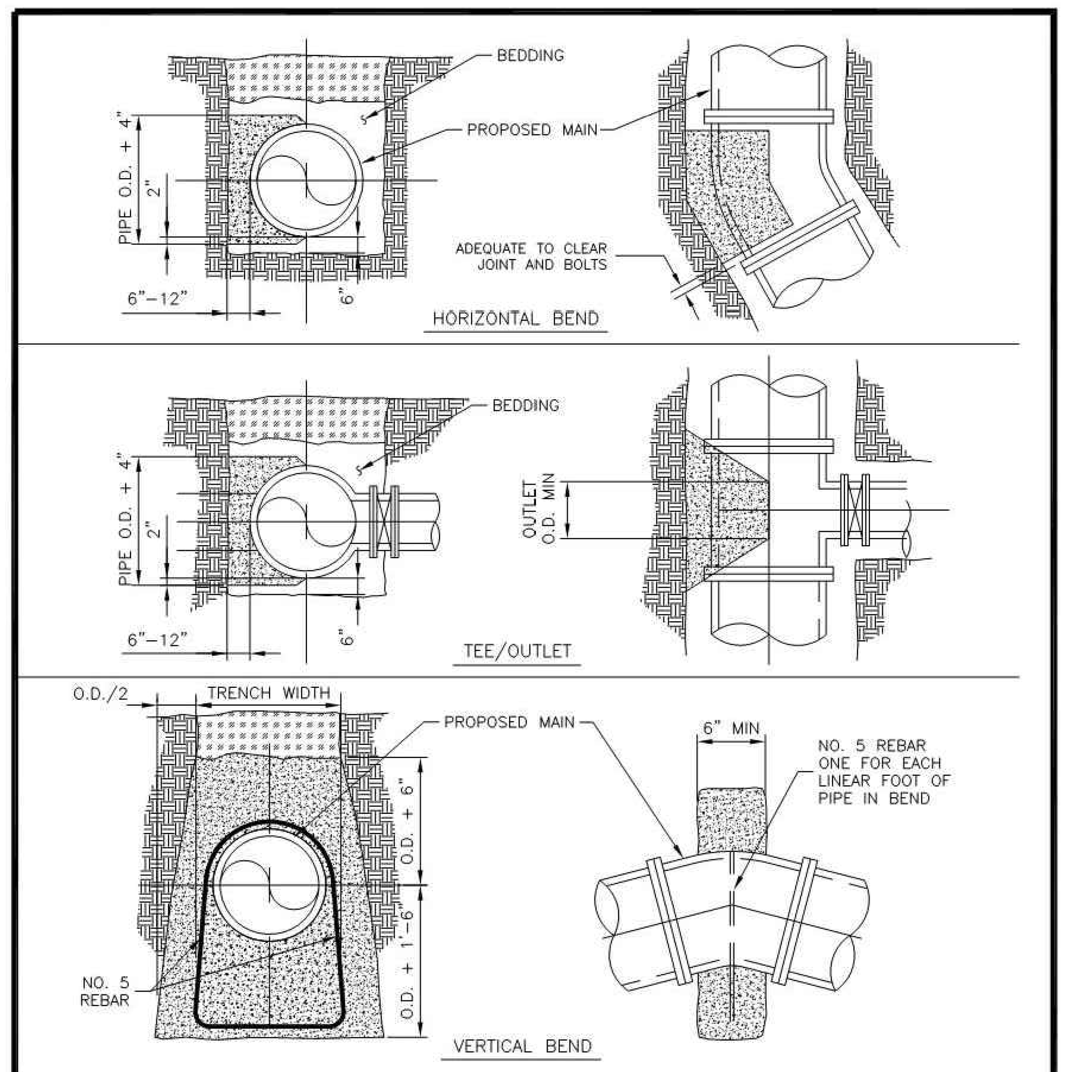

THRUST BLOCK DESIGN AS FOLLOWS:

A. PRESSURE OF 150 P.S.I. (ACTUAL IF HIGHER) + 50% SURGE ALLOWANCE

B. MAXIMUM SOIL BEARING:

SOIL TYPE	PRESSURE
LIMESTONE	4000 LBS./SQ. FT.
UNDISTURBED SOIL, CALICHE	2000 LBS./SQ. FT.
LOOSE OR SPONGY SOIL	1500 LBS./SQ. FT.

CITY OF HUTTO
CONSTRUCTION STANDARDS AND DETAILS
TYPICAL THRUST BLOCKS FOR WATER AND FORCE MAINS
HUTTO UTILITY SYSTEMS

DRAWING NO. W–11 | UPDATED: 11/11/10 | DRAWN BY: XXX | SCALE: N.T.S. | FILE NAME: W11.DWG

SECTION VIEW

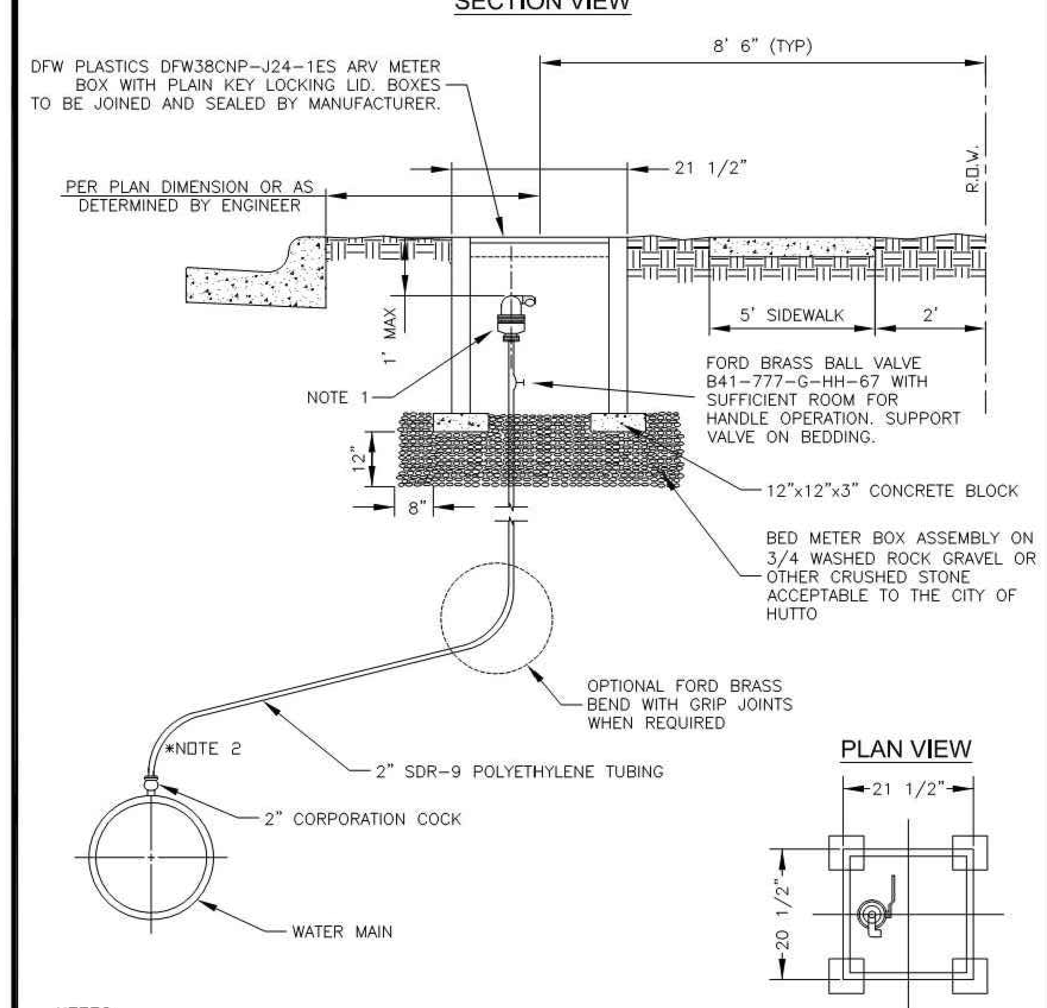

NOTES:

1) ARI D–040 P 2" AIR RELEASE VALVE. HIGHER CAPACITY VALVES TO BE DESIGNATED BY DESIGN ENGINEER AND APPROVED BY CITY ENGINEER.

2) THREAD TO COMPRESSION BRASS ELBOW ALLOWED IF NECESSARY DUE TO DEPTH LIMITATIONS.

CITY OF HUTTO
CONSTRUCTION STANDARDS AND DETAILS
STANDARD AIR RELEASE VALVE FOR WATER MAINS
HUTTO UTILITY SYSTEMS

DRAWING NO. W–12 | UPDATED: 3/01/12 | DRAWN BY: MSL | SCALE: N.T.S. | FILE NAME: W12.DWG

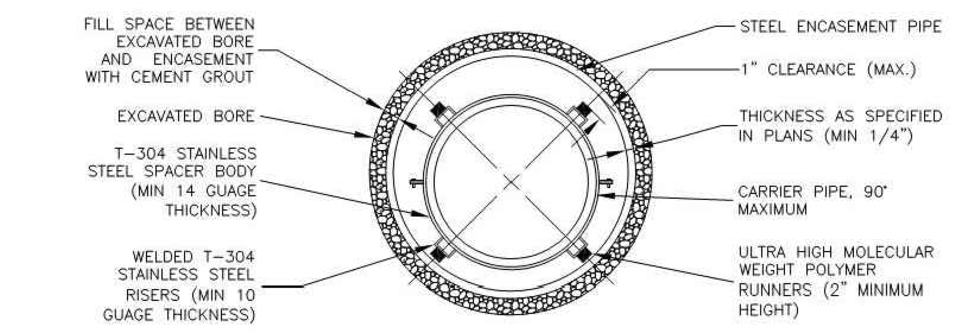

PIPE SIZE–CARRIER (DIAMETER)	PIPE SIZE–CASING (DIAMETER) (MIN.)	MINIMUM PIPE THICKNESS (INCHES)	
6"	16"	1/4	0.2500
8"	18"	1/4	0.2500
10"	20"	5/16	0.3125
12" ~ 14"	24"	3/8	0.3750
16" ~ 18"	30"	7/16	0.4375
20"	36"	1/2	0.5000
24"	42"	1/2	0.5000
30"	48"	1/2	0.5000

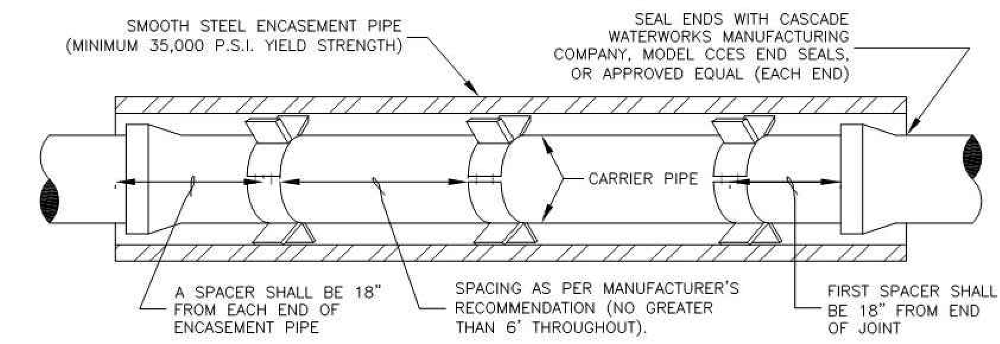

NOTES:

1. CASING SPACER CONFIGURATION AND SPACING SHALL BE AS SHOWN ON MANUFACTURER'S DRAWINGS FOR SPECIFIC WORK; THESE MUST BE ACCEPTABLE TO THE CITY OF HUTTO.
2. CASING SPACER SHALL BE AS MANUFACTURED BY CASCADE WATERWORKS MANUFACTURING COMPANY, MODEL CCS, OR APPROVED EQUAL.
3. CASING SPACERS SHALL NOT BE PAID DIRECTLY BUT SHALL BE CONSIDERED SUBSIDIARY TO THE APPROPRIATE BID ITEM.
4. DO NOT USE WEDGES BETWEEN CARRIER PIPE AND CASING.
5. PRIOR TO INSERTING CARRIER PIPE, ANY WATER SHOULD BE PUMPED OUT OF CASING SO THAT NO MORE THAN A FEW INCHES OF WATER REMAINS.
6. ALL JOINTS IN ENCASEMENT SHALL BE RESTRAINED FOR WATER LINES ONLY UNLESS OTHERWISE DIRECTED BY THE CITY ENGINEER.

CITY OF HUTTO
CONSTRUCTION STANDARDS AND DETAILS
PIPE ENCASEMENT
HUTTO UTILITY SYSTEMS

DRAWING NO. W–14 | UPDATED: 2015–04–01 | DRAWN BY: MSL | SCALE: N.T.S. | FILE NAME: W14.DWG

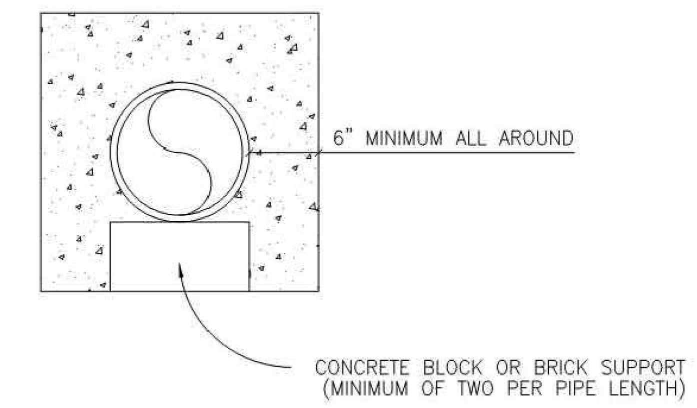

NOTES:

1. ENCASEMENT TO BE CONSTRUCTED WHERE SEWER LINES PASS OVER OR UNDER A WATER MAIN WITH LESS THAN EIGHTEEN INCHES (18") CLEAR DISTANCE.
2. AT CROSSINGS, ENCASEMENT SHALL EXTEND TEN FEET (10'–0") ON EITHER SIDE OF CROSSING.
3. BEGINNING AND ENDING OF ENCASEMENTS SHALL NOT BE MORE THAN SIX INCHES (6") FROM A PIPE JOINT.
4. WHERE WATER AND SEWER LINES PARALLEL WITH LESS THAN TEN FEET (10'–0") HORIZONTAL CLEAR DISTANCE, NO ENCASEMENT IS REQUIRED IF BOTH LINES ARE 150 PRESSURE PIPE.
5. RAW WATER MAINS SHALL BE 150 PSI PRESSURE RATED WHEN PARALLELING POTABLE WATER MAINS WITH LESS THAN TEN FEET (10'–0") HORIZONTAL CLEARANCE.
6. WHERE MINIMUM COVER, THIRTY INCHES (30") IS NOT AVAILABLE, ENCASEMENT WILL BE REQUIRED.
7. ALL CONCRETE ENCASEMENTS MUST BE FORMED AND INSPECTED BY THE CITY OF HUTTO INSPECTOR PRIOR TO PLACING CONCRETE AND BACKFILLING.

CITY OF HUTTO
CONSTRUCTION STANDARDS AND DETAILS
CONCRETE ENCASEMENT DETAIL
HUTTO UTILITY SYSTEMS

DRAWING NO. W–15 | UPDATED: 06/01/09 | DRAWN BY: xxx | SCALE: N.T.S. | FILE NAME: W15.DWG

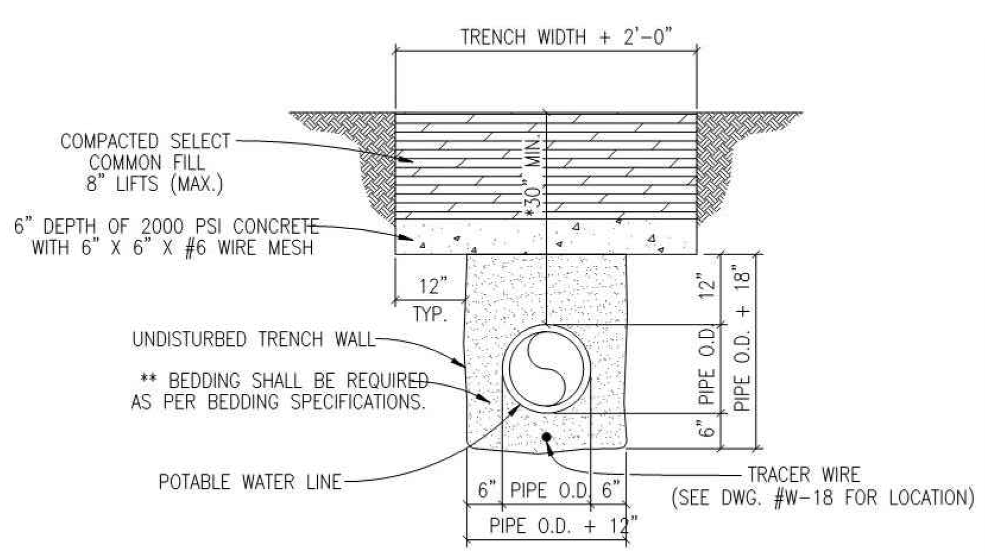

* WHERE 30" MINIMUM COVER CAN NOT BE OBTAINED OR DUE TO POTENTICAL SURFACE LOADING THE CITY MAY REQUIRE A CAP TO BE INSTALLED.

** TYPICAL BEDDING SPECIFICATIONS:

SIEVE SIZE	3/8" F % RETAINED	1/2" D % RETAINED
1/2"	0	0
3/8"	0–2	5–25
4m	40–85	80–100
10m	95–100	96–100
3/4"	–	–

CITY OF HUTTO
CONSTRUCTION STANDARDS AND DETAILS
CONCRETE TRENCH CAP DETAIL
HUTTO UTILITY SYSTEMS

DRAWING NO. W–16 | UPDATED: 09/28/2017 | DRAWN BY: xxx | SCALE: N.T.S. | FILE NAME: W16.DWG

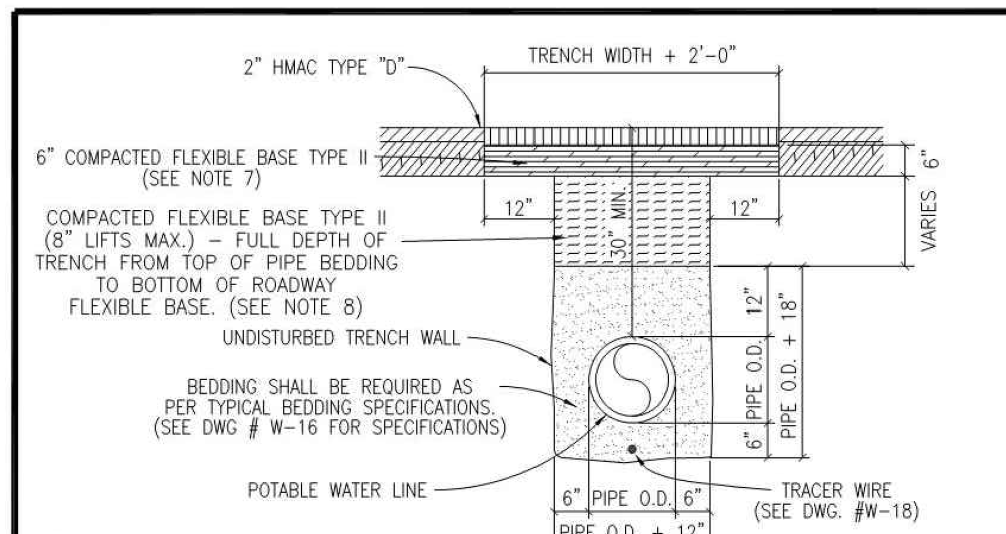

NOTES:

1. REPLACED BASE MATERIAL OVER DITCH SHALL BE TWICE THE THICKNESS OF THE ORIGINAL BASE.
2. BASE MATERIAL SHALL BE PLACED IN TWO OR THREE LAYERS AND EACH LAYER THOROUGHLY ROLLED OR TAMPED TO SPECIFIED MAXIMUM DENSITY.
3. ASPHALT CONCRETE PAVEMENT JOINTS SHALL BE MECHANICALLY SAWED.
4. SURFACE MATERIAL WILL BE CONSISTENT WITH THE EXISTING SURFACE.
5. A MINIMUM OF ONE DENSITY TEST SHALL BE TAKEN EVERY TWO HUNDRED (200) FEET FOR EACH SIX (6) INCH LIFT OF SUBGRADE AND EACH OPEN CUT CROSSING. PROCTORS FOR MATERIALS USED IN BACKFILLING SHALL BE OBTAINED BY A CERTIFIED LABORATORY. DENSITY TESTS SHALL BE CONDUCTED BY A CERTIFIED LABORATORY OR THE PERMITTEE'S CONSULTANTS. THE PERCENTAGE OF MAXIMUM DENSITY REQUIRED SHALL BE IN ACCORDANCE WITH THE LATEST EDITION OF "THE DEPARTMENT OF TRANSPORTATION STANDARD SPECIFICATIONS FOR ROAD AND BRIDGE CONSTRUCTION" AT THE TIME THE PERMIT WAS ISSUED. ALL DENSITY TESTS SHALL BE COMPLETED AND ACCEPTED ON EACH LAYER PRIOR TO ADDITIONAL BACKFILLING. A COPY OF ALL COMPLETED AND ACCEPTED DENSITY TESTS SHALL BE FURNISHED TO CITY OF HUTTO.
6. THESE SPECIFICATIONS MAY BE SUPERSEDED BY THE GOVERNING AGENCY.
7. FLEXIBLE BASE TYPE II: (ROADWAY BASE)
   TxDOT TYPE A – GRADE 2 OR BETTER CRUSHED LIMESTONE BASE COMPACTED TO 98% OF TxDOT 113E AT OPTIMUM MOISTURE. PROCTOR TO BE PROVIDED BY THE CONTRACTOR TO THE CITY INSPECTOR.
8. FLEXIBLE BASE TYPE II: (TRENCH BACKFILL)
   TxDOT TYPE A – GRADE 2 OR BETTER CRUSHED LIMESTONE BASE COMPACTED TO 95% OF TxDOT 113E AT OPTIMUM MOISTURE. PROCTOR TO BE PROVIDED BY THE CONTRACTOR TO THE CITY INSPECTOR.
9. CONTRACTOR OR ENGINEER MAY REQUEST FOR USE OF ALTERNATE BACKFILL MATERIAL. ALTERNATE MATERIALS AND TESTING PROTOCOL MUST BE SUBMITTED TO AND APPROVED BY THE CITY ENGINEER PRIOR TO USE.

CITY OF HUTTO
CONSTRUCTION STANDARDS AND DETAILS
TRENCH AND EMBEDMENT AND PAVEMENT REPLACEMENT DETAIL UNDER EXISTING ROADWAY
HUTTO UTILITY SYSTEMS

DRAWING NO. W–17 | UPDATED: 06/01/09 | DRAWN BY: xxx | SCALE: N.T.S. | FILE NAME: W17.DWG

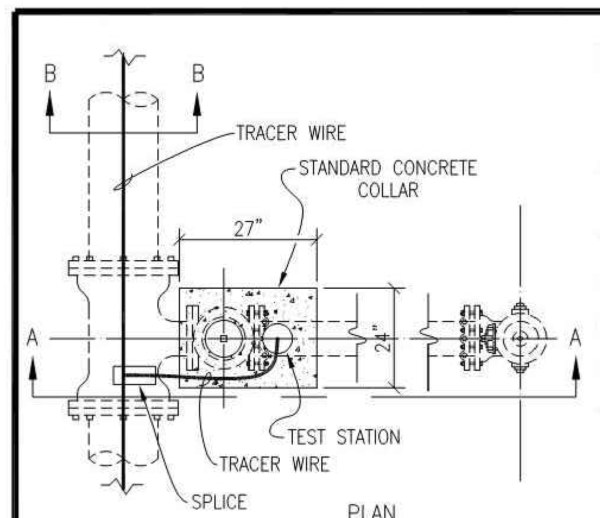

NOTES:

1. TEST STATION SHALL BE HANDLEY INDUSTRIES INC. – 2 INCH CATHODIC TEST STATIONS OR APPROVED EQUAL.
2. THE 15" ABS PLASTIC BOX SHALL BE A FLANGED TOP FOR INSTALLATION AT GROUND LEVEL.
3. ALL TERMINALS ARE TO BE MADE OF SOLID BRASS.
4. PLASTIC LIDS SHALL BE COLOR BLUE AND MARKED "WATER".
5. TEST TERMINALS ARE TO BE INCORPORATED WITH HANDLEY VALVE BOXES.
6. BURY SPLICE SHALL BE 3M DIRECT BURY SPLICE (DBR) OR APPROVED EQUAL.
7. TEST STATIONS SHALL BE INSTALLED AT EACH FIRE HYDRANT LOCATION.

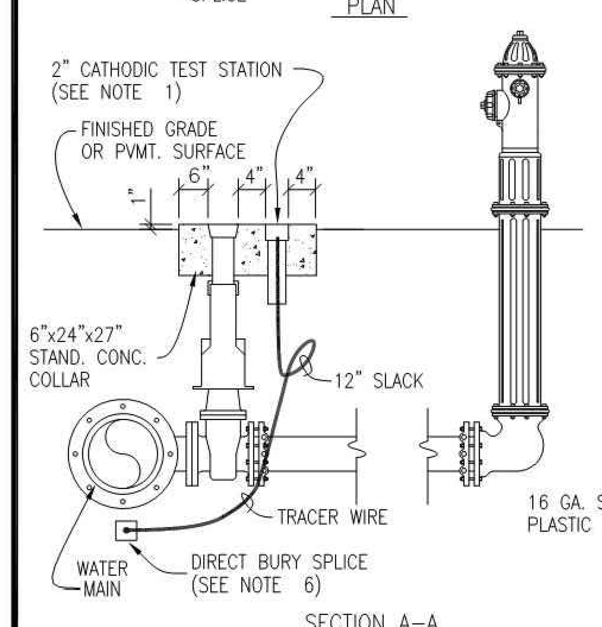

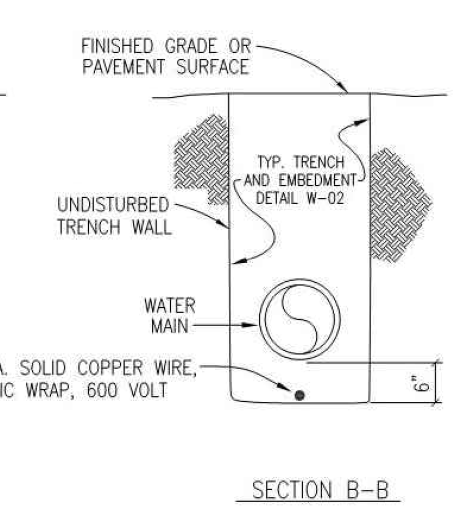

CITY OF HUTTO
CONSTRUCTION STANDARDS AND DETAILS
TRACER WIRE INSTALLATION AND TEST STATION LOCATION
HUTTO UTILITY SYSTEMS

DRAWING NO. W–18 | UPDATED: 9/1/2011 | DRAWN BY: XXX | SCALE: N.T.S. | FILE NAME: W18.DWG

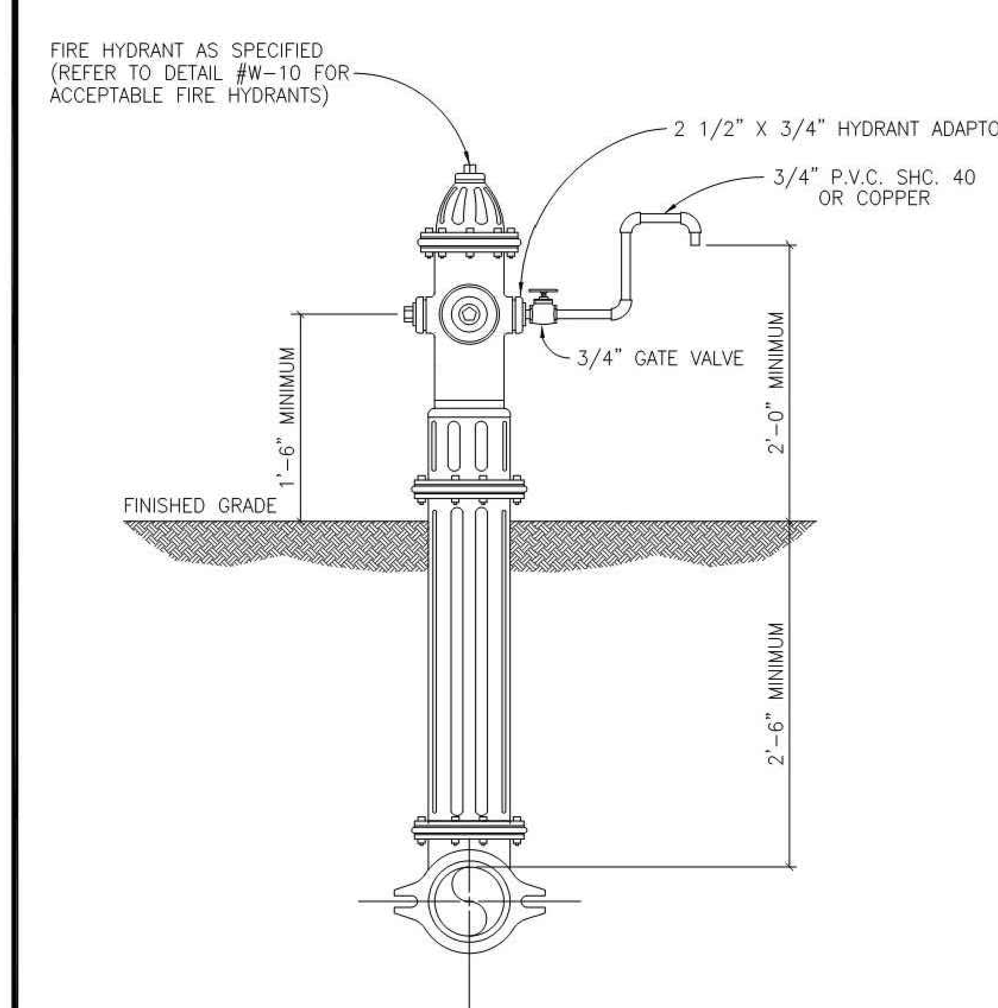

CITY OF HUTTO
CONSTRUCTION STANDARDS AND DETAILS
FIRE HYDRANT SAMPLING POINT
HUTTO UTILITY SYSTEMS

DRAWING NO. W–19 | UPDATED: 11/11/10 | DRAWN BY: XXX | SCALE: N.T.S. | FILE NAME: W19.DWG

REV	DESCRIPTION	DATE	APR

DESIGNED BY: DAZ
REVIEWED BY: TMH
DRAWN BY: DAZ

BGE

BGE, INC.
1701 DIRECTORS BOULEVARD, SUITE 1000
AUSTIN, TX 78744
TBPE Registration No. F-1046
TEL: 512-879-0400 www.browngay.com

COTTONWOOD CREEK, PHASE II
HUTTO, TEXAS

WATER DETAILS (2 OF 4)

SUBMITTAL DATE: 03-15-2021

STATE OF TEXAS
TIMOTHY M. HOLLAND
94848
LICENSED PROFESSIONAL ENGINEER
07/08/2021

SHEET
50 OF 54

G:\TXC\Projects\Lennar\8390-00-Cottonwood_PH2\LD\01_CADD\01_Shts\C-SP-DETL-PH-2.dwg Layout: WATER DETAILS (2 OF 4) Plotted: 7/7/2021 4:57:00 PM

Record Drawing

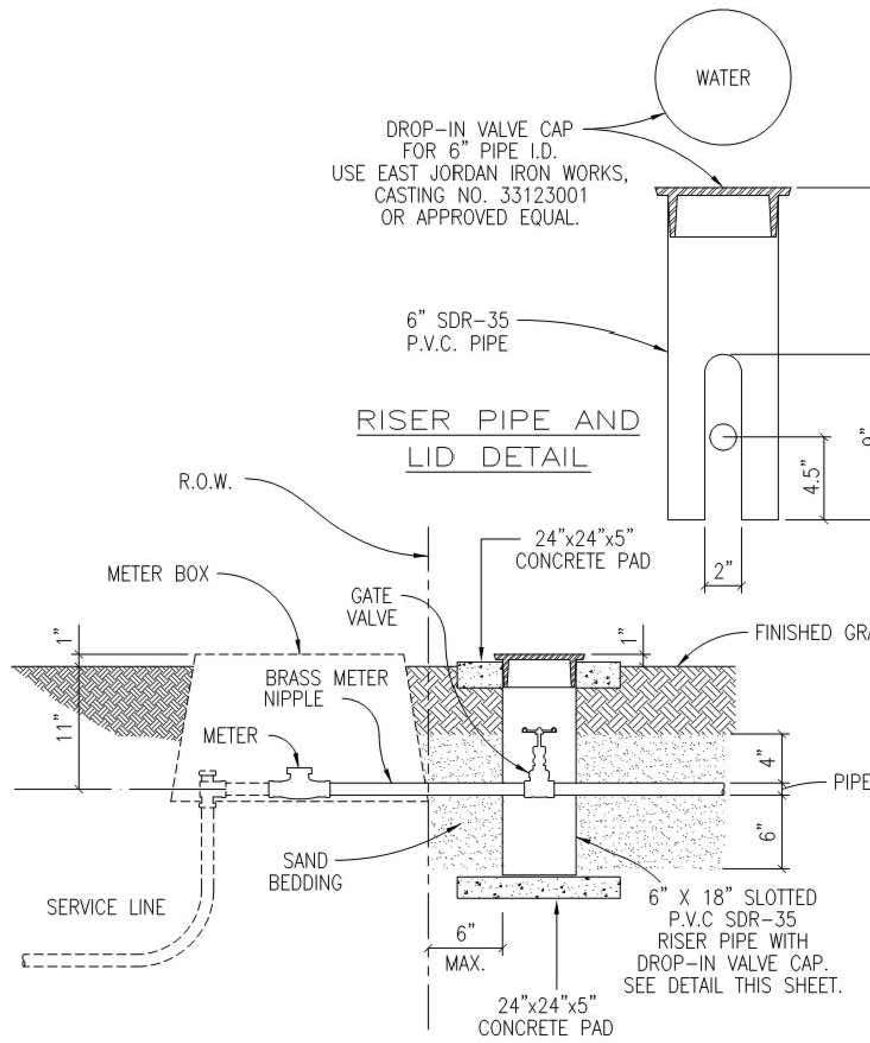

NOTES:

1. GATE VALVE SHALL BE A HAMMOND IB645, CLASS 125, BRONZE GATE, SCREWED BONNET, NON-RISING STEM, SOLID WEDGE DISC WITH THREADED ENDS OR APPROVED EQUAL.
2. DROP-IN VALVE CAP SHALL BE CAST WITH THE WORD "WATER" ON TOP.
3. USE SCHEDULE 80, M.I.P. ADAPTER AS REQUIRED.

Hutto	CITY OF HUTTO CONSTRUCTION STANDARDS AND DETAILS	DRAWING NO. W-20
		UPDATED: 11/11/11
	CUSTOMER'S CUT-OFF HUTTO UTILITY SYSTEMS	DRAWN BY: VMB
		SCALE: N.T.S.
		FILE NAME: W20.DWG

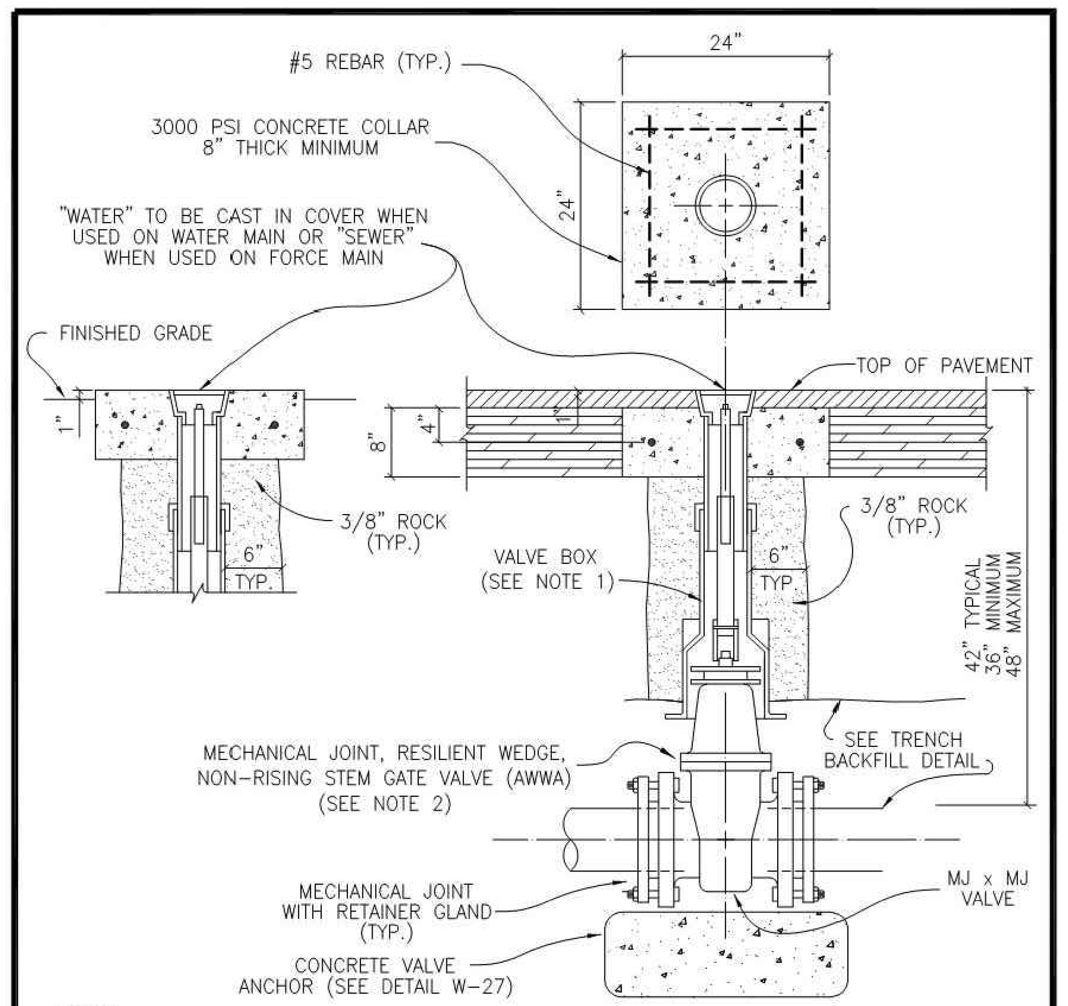

NOTES:

1. VALVE BOX SHALL BE AMERICAN FLOW CONTROL TRENCH ADAPTER OR APPROVED EQUAL HAVING AN ADJUSTABLE RANGE OF + OR − 6 INCHES FROM INSTALLED FINISH GRADE. (SEE VALVE SETTING DETAIL, DWG. #W-07.)
2. ACCEPTABLE GATE VALVES ARE:
   A. AMERICAN FLOW CONTROL − SERIES 2500
   B. MUELLER − 2360 SERIES
   C. CLOW

Hutto	CITY OF HUTTO CONSTRUCTION STANDARDS AND DETAILS	DRAWING NO. W-21
		UPDATED: 11/11/11
	INLINE VALVE INSTALLATION HUTTO UTILITY SYSTEMS	DRAWN BY: MSL
		SCALE: N.T.S.
		FILE NAME: W21.DWG

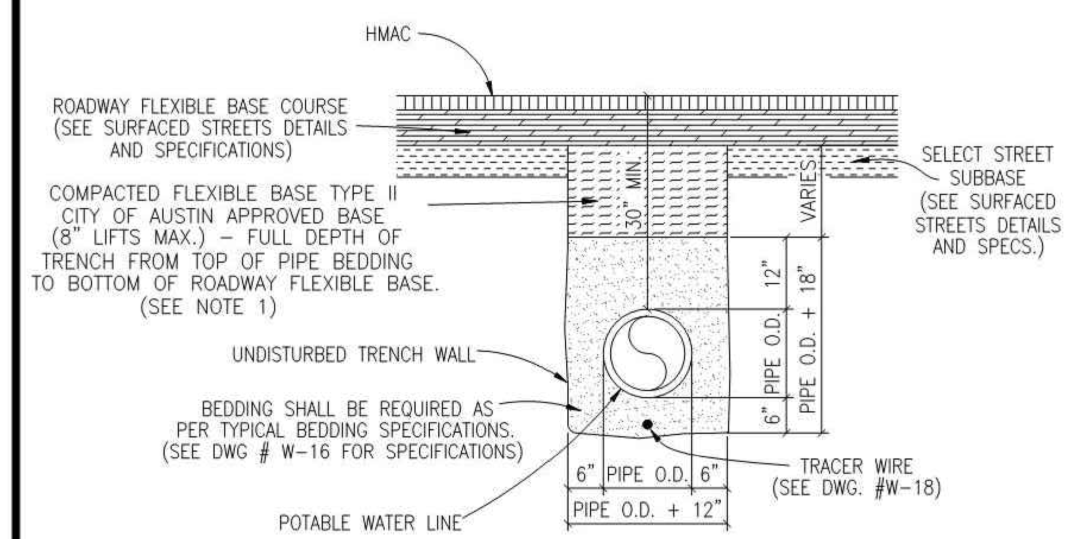

NOTES:

1. A MINIMUM OF ONE DENSITY TEST SHALL BE TAKEN EVERY TWO HUNDRED (200) FEET FOR EACH EIGHT (8) INCH LIFT OF BASE. PROCTORS FOR MATERIALS USED IN BACKFILLING SHALL BE OBTAINED BY A CERTIFIED LABORATORY. DENSITY TESTS SHALL BE CONDUCTED BY A CERTIFIED LABORATORY OR THE PERMITTEE'S CONSULTANTS. THE PERCENTAGE OF MAXIMUM DENSITY REQUIRED SHALL BE IN ACCORDANCE WITH THE LATEST EDITION OF "THE DEPARTMENT OF TRANSPORTATION STANDARD SPECIFICATIONS FOR ROAD AND BRIDGE CONSTRUCTION" AT THE TIME THE PERMIT WAS ISSUED. ALL DENSITY TESTS SHALL BE COMPLETED AND ACCEPTED ON EACH LAYER PRIOR TO ADDITIONAL BACKFILLING. A COPY OF ALL COMPLETED AND ACCEPTED DENSITY TESTS SHALL BE FURNISHED TO CITY OF HUTTO. BACKFILL COMPACTION SHALL BE A MINIMUM OF 95% MAXIMUM DENSITY PER TxDOT 113E SPECIFICATIONS.
2. THESE SPECIFICATIONS MAY BE SUPERSEDED BY THE GOVERNING AGENCY.
3. CONTRACTOR OR ENGINEER MAY REQUEST FOR USE OF ALTERNATE BACKFILL MATERIAL. ALTERNATE MATERIALS AND TESTING PROTOCOL MUST BE SUBMITTED TO AND APPROVED BY THE CITY PRIOR TO USE.

CITY OF HUTTO	CITY OF HUTTO CONSTRUCTION STANDARDS AND DETAILS	DRAWING NO. W-22
		UPDATED: 12/13/17
	TRENCH AND EMBEDMENT DETAIL UNDER PROPOSED ROADWAY HUTTO UTILITY SYSTEMS	DRAWN BY: BB
		SCALE: N.T.S.
		FILE NAME: W22.DWG

METER BOX SCHEDULE	
METER SIZE	METER BOX*
5/8"	DFW36C-KSBSM
3/4"	DFW36C-KSBSM
1"	DFW37C-KSBSM
1 1/2"	DFW65C-12-KSBSM
2"	DFW1730-18-KSBSM

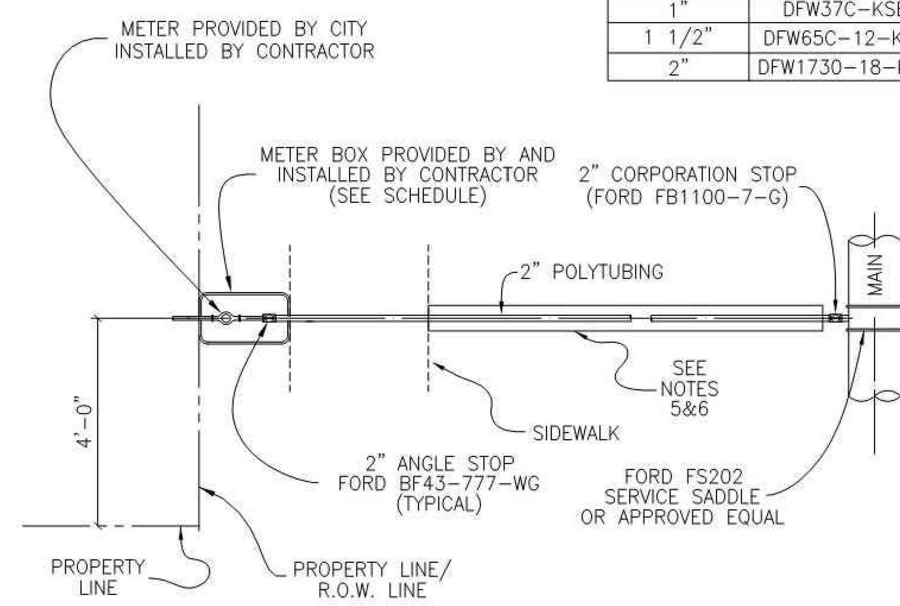

NOTES:

1. ANGLE STOPS SHALL BE SIZED TO MATCH SERVICE & METER SIZE.
2. 1" ANGLE STOPS WITH 3/4" VALVES SHALL NOT BE PERMITTED.
3. MULTIPLE SERVICE/METER INSTALLATIONS OF MORE THAN 4 METERS PER SERVICE AND SERVICE LINES LARGER THAN 2" IN DIAMETER SHALL BE HANDLED ON AN INDIVIDUAL BASIS.
4. 2" ANGLE STOPS SHALL BE PROVIDED WITH BOTH A LOCKING CAP AND METER FLANGE.
5. BEDDING MATERIAL PER CONSTRUCTION SPECIFICATIONS.
6. CASING REQUIREMENTS FOR SERVICE LINES CROSSING ROADWAYS SEE DETAIL W-26.
7. ANY VARIATIONS ON FITTINGS MUST BE APPROVED BY THE CITY ENGINEER.
8. ALL SERVICE LINES SHALL BE PLACED PERPENDICULAR TO ROADWAY.

Hutto	CITY OF HUTTO CONSTRUCTION STANDARDS AND DETAILS	DRAWING NO. W-23
		UPDATED: 08/19/13
	COMMERCIAL WATER SERVICE HUTTO UTILITY SYSTEMS	DRAWN BY: MSL
		SCALE: N.T.S.
		FILE NAME: W04.DWG

METER SIZE	LENGTH
5/8"	7 3/4"
3/4"	9"
1"	11"

NOTE:

1. SERVICE PIPE SHALL BE 200 psi BLACK COLORED POLYETHYLENE HAVING A DIMENSION RATIO OF 9 (DR9).
2. SERVICE SADDLES SHALL BE WRAPPED COMPLETELY WITH 8 mil. POLYETHYLENE FILM.
3. TOP OF BOXES SHALL BE 1" ABOVE FINISHED GRADE.
4. PIPING AND TUBING SHALL BE INSTALLED IN ACCORDANCE WITH SECTION 510.3 OF THE STANDARD SPECIFICATIONS. SPECIAL ATTENTION IS CALLED TO "PIPE BEDDING ENVELOPE" AND "BACKFILLING", SECTIONS 510.3 (14) AND 510.3 (25), RESPECTIVELY.
5. METER BOX TO BE MODEL DFW36C-KSBSM BY DFW PLASTICS, INC. OR APPROVED EQUAL. PROVIDE BLACK-PAINTED METAL LID WITH METER READER.
6. AXIS OF METER ASSEMBLY (METER STOP, METER, PIPING AND OWNERS CUTOFF) SHALL BE 10" BELOW TOP OF BOX.
7. SLOTS PROVIDED IN METER BOX TO ACCOMODATE PIPING INTO AND OUT OF BOX SHALL NOT BE MODIFIED.
8. ALL PARTS SHALL BE AS NOTED OR APPROVED EQUAL.

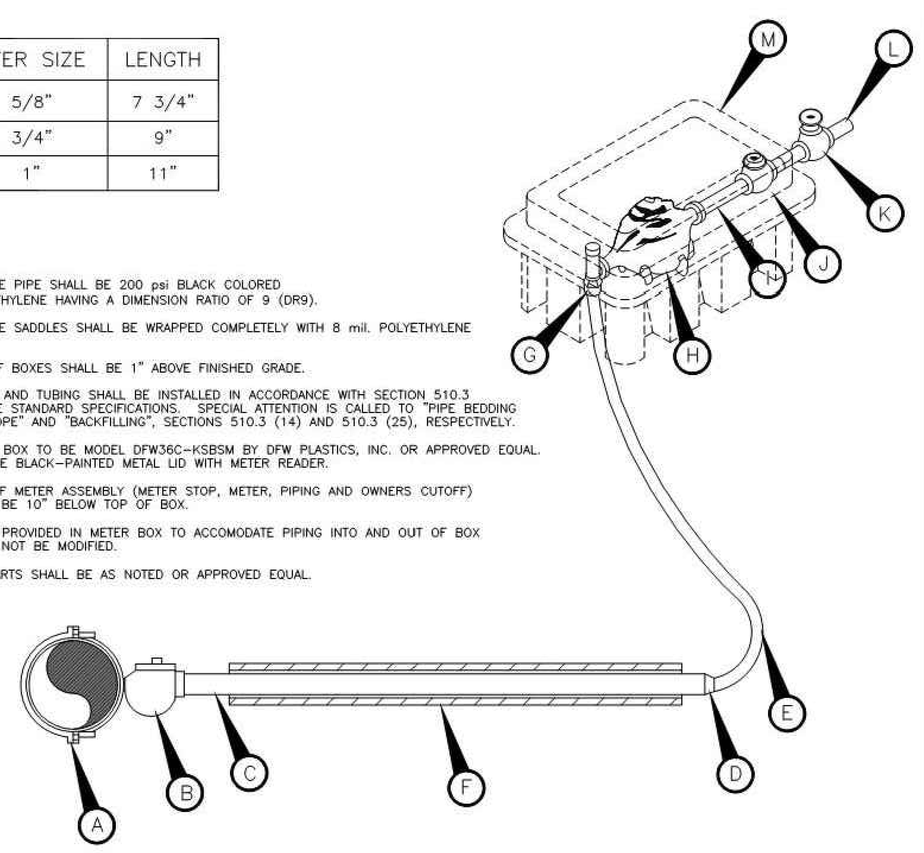

MATERIAL LIST

A. FORD BRASS FS202 SERIES TAPPING SADDLE.
B. 1 1/2" CORPORATION STOP: FORD BRASS FB1100-6-G.
C. 1 1/2" POLYETHYLENE TUBING SDR 9, CLASS 200.
D. FORD BRASS C84-34G COMPRESSION BY MALE REDUCING ADAPTER.
E. 1" POLYETHYLENE TUBING SDR 9, CLASS 200.
F. PIPE CASING WHERE APPLICABLE (SEE SEPARATE DETAIL).
G. FORD BRASS BA13-332W ANGLE STOP.

NOTE: H THRU L TO BE INSTALLED UNDER SEPARATE BUILDING PERMIT.

H. WATER METER, SUPPLIED BY CITY.
I. WATER METER COUPLING; MALE I.P.T. X SWIVEL COUPLING NUT:
   − FOR 5/8" AND 3/4" METERS: 3/4" x 8 1/2" LONG.
   − FOR 1" METERS: 1" x 8 1/2" LONG.
J. BRONZE GATE VALVE: NON-RISING STEM (3/4" OR 1") FEMALE I.P.T. (PROPERTY OWNERS CUT-OFF OUTSIDE METER BOX IN SEPARATE VALVE CAN WITH LID AS PER CITY STANDARDS).
K. 3/4" PRESSURE REDUCING VALVE.
L. 3/4" OR 1" PIPE MEETING CITY OF HUTTO PLUMBING CODE REQUIREMENTS.
M. PLASTIC RECTANGULAR METER BOX AS NOTED ON DETAIL W-04.

Hutto	CITY OF HUTTO CONSTRUCTION STANDARDS AND DETAILS	DRAWING NO. W-24
		UPDATED: 12/1/11
	1", 3/4" OR 5/8" SINGLE METER HUTTO UTILITY SYSTEMS	DRAWN BY: MSL
		SCALE: N.T.S.
		FILE NAME: W24.DWG

METER SIZE	LENGTH
5/8"	7 3/4"
3/4"	9"

NOTE:

1. SERVICE PIPE SHALL BE 200 psi BLACK COLORED POLYETHYLENE HAVING A DIMENSION RATIO OF (DR9).
2. SERVICE SADDLES SHALL BE WRAPPED COMPLETELY WITH 8 mil. POLYETHYLENE FILM.
3. TOP OF BOXES SHALL BE 1" ABOVE FINISHED GRADE.
4. BRANCH CONNECTION AND BOTH ANGLE METER STOPS MUST BE INSTALLED PRIOR TO FIRST METER INSTALLATION EVEN THOUGH SECOND PROPERTY MAY NOT BE READY FOR SERVICE.
5. PIPING AND TUBING SHALL BE INSTALLED IN ACCORDANCE WITH SECTION 510.3 OF THE STANDARD SPECIFICATIONS. SPECIAL ATTENTION IS CALLED TO "PIPE BEDDING ENVELOPE" AND "BACKFILLING", SECTIONS 510.3 (14) AND 510.3 (25), RESPECTIVELY.
6. METER BOX TO BE MODEL DFW38C-14-KSBSM BY DFW PLASTICS, INC. OR APPROVED EQUAL.
7. AXIS OF METER ASSEMBLY (METER STOP, METER, PIPING AND OWNERS CUTOFF) SHALL BE 10" BELOW TOP OF BOX.
8. SLOTS PROVIDED IN METER BOX TO ACCOMODATE PIPING INTO AND OUT OF BOX SHALL NOT BE MODIFIED.
9. ALL PARTS TO BE AS NOTED OR APPROVED EQUAL.

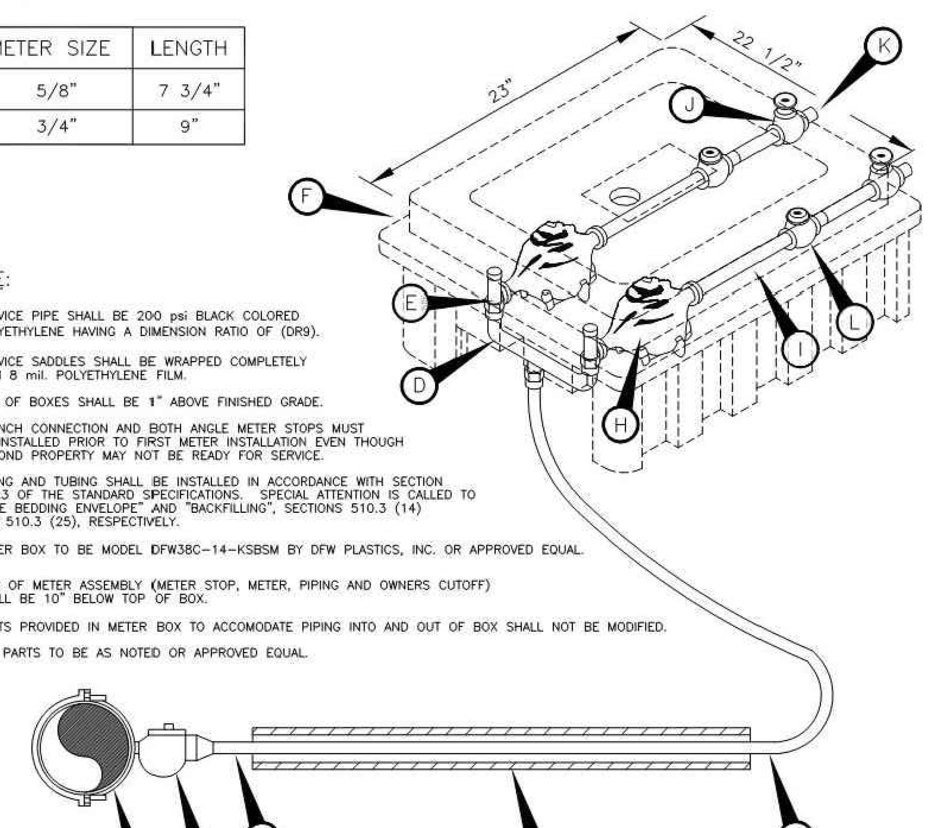

MATERIAL LIST

A. FORD BRASS FS202 SERIES TAPPING SADDLE
B. 1 1/2" FORD BRASS FB1100-6-G CORPORATION STOP.
C. 1 1/2" POLYETHYLENE SDR 9, CLASS 200 TUBING.
D. FORD BRASS U48-63-7 1/2 G U-BRANCH.
E. FORD BRASS BA13-332W ANGLE STOP.
F. PLASTIC RECTANGULAR METER BOX (SEE NOTE 6).
G. PIPE CASING (SEE DETAIL W-26).

NOTE: H THRU L TO BE INSTALLED UNDER SEPARATE BUILDING PERMIT

H. WATER METER, PROVIDED BY CITY.
I. WATER METER COUPLING: 3/4" x 8 1/2" MALE I.P.T. X SWIVEL COUPLING NUT.
J. 3/4" OR 1" BRONZE GATE VALVE: NON-RISING STEM, FEMALE I.P.T. (PROPERTY OWNERS CUT-OFF OUTSIDE METER BOX IN SEPARATE VALVE CAN WITH LID AS PER CITY STANDARDS).
K. 3/4" OR 1" PIPE MEETING CITY OF HUTTO PLUMBING CODE REQUIREMENTS.
L. 3/4" P.R.V.

Hutto	CITY OF HUTTO CONSTRUCTION STANDARDS AND DETAILS	DRAWING NO. W-25
		UPDATED: 12/1/11
	3/4" OR 5/8" DOUBLE METER HUTTO UTILITY SYSTEMS	DRAWN BY: MSL
		SCALE: N.T.S.
		FILE NAME: W25.DWG

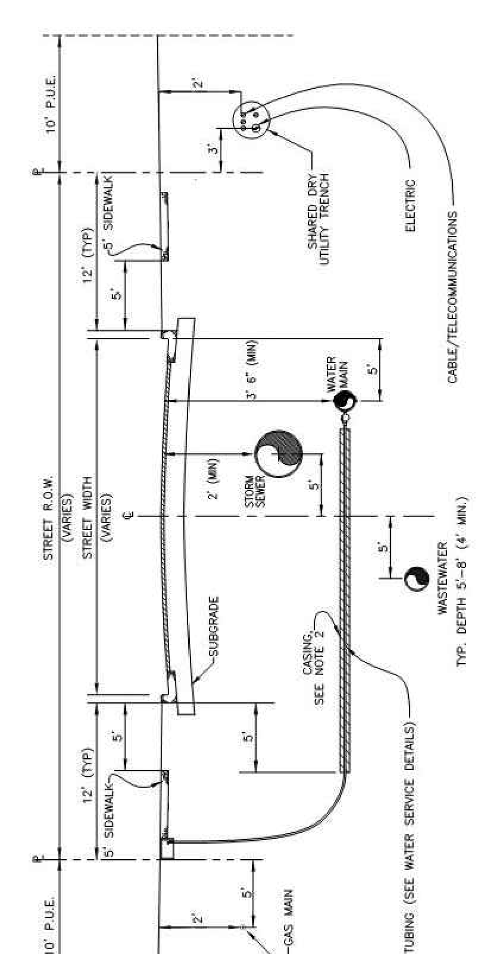

NOTE:

1. REFER TO "STANDARD INSTALLATION DETAIL FOR ONE OR TWO METERS" FOR SERVICE SPECIFICS.
2. FOR SERVICE LINES GREATER THAN 1.5" DIAMETER, USE 4" SDR-35 FOR CASING. FOR LINES 1.5" IN DIAMETER AND BELOW, USE 2" SCHEDULE 40 PVC. GALVANIZED CASING PIPE REQUIRED FOR JACK AND BORE. ALL SERVICE LINES TO BE ENCASED PER THIS DETAIL.
3. STORMSEWER SHALL BE A MINIMUM OF ONE FOOT(1') ABOVE WASTEWATER MAINS AND LATERALS.
4. MINIMUM VERTICAL SEPARATION DISTANCE BETWEEN WATER AND WW AT CROSSINGS IS 2'.

Hutto	CITY OF HUTTO CONSTRUCTION STANDARDS AND DETAILS	DRAWING NO. W-26
		UPDATED: 3/1/2015
	WATER SERVICE CASING DETAIL HUTTO UTILITY SYSTEMS	DRAWN BY: MSL
		SCALE: N.T.S.
		FILE NAME: W26.DWG

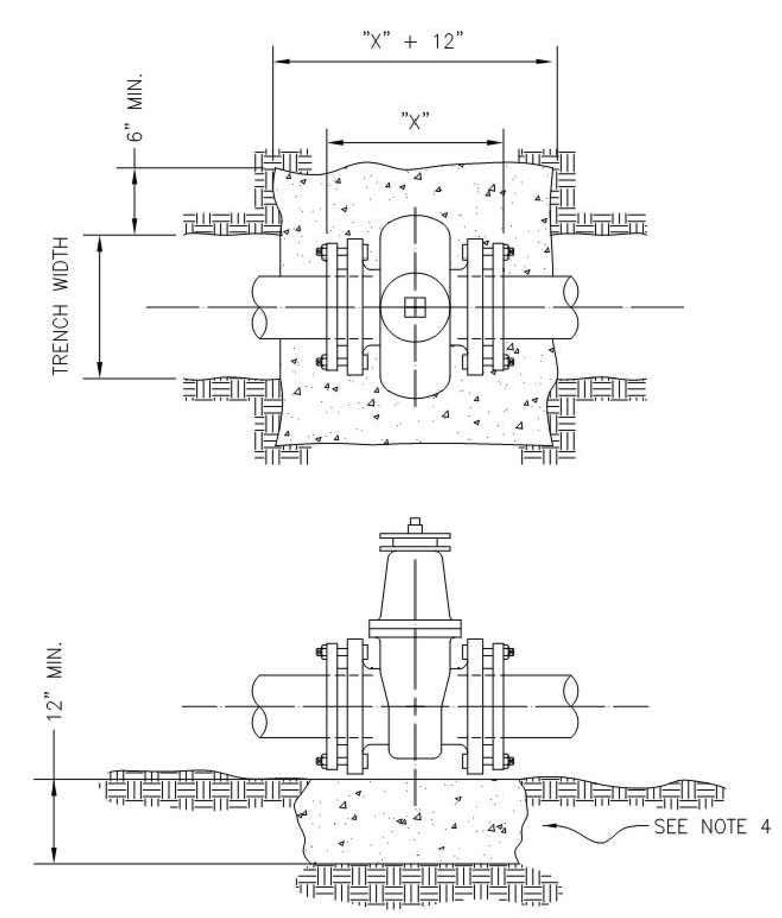

NOTES:

1. THE ENGINEER SHALL PROVIDE DESIGN ON ALL VALVES 12" AND LARGER.
2. COMPLY WITH REQUIREMENTS OF AWWA C-550, PROTECTIVE EPOXY INTERIOR COATINGS FOR VALVES.
3. PAINT UNEMBEDDED PORTION OF REBAR WITH TWO COATS OF COAL TAR EXPOXY.
4. CONCRETE VALVE SUPPORT, 2500 PSI CONCRETE.

Hutto	CITY OF HUTTO CONSTRUCTION STANDARDS AND DETAILS	DRAWING NO. W-27
		UPDATED: 10/13/10
	CONCRETE VALVE ANCHOR HUTTO UTILITY SYSTEMS	DRAWN BY: MSL
		SCALE: N.T.S.
		FILE NAME: W27.DWG

REV	DESCRIPTION	DATE	APR

DESIGNED BY: DAZ
REVIEWED BY: TMH
DRAWN BY: DAZ

BGE, INC.
1701 DIRECTORS BOULEVARD, SUITE 1000
AUSTIN, TX 78744
TBPE Registration No. F-1046
TEL: 512-879-0400 www.browngay.com

COTTONWOOD CREEK, PHASE II
HUTTO, TEXAS

WATER DETAILS (3 OF 4)

SUBMITTAL DATE: 03-15-2021

STATE OF TEXAS
TIMOTHY M. HOLLAND
94848
LICENSED PROFESSIONAL ENGINEER
07/08/2021

SHEET 51 OF 54

G:\TXC\Projects\Lennar\8390-00-Cottonwood_PH2\LD\01_CADD\01_Shts\C-SP-DETL-PH-2.dwg Layout: WATER DETAILS (3 OF 4) Plotted: 7/7/2021 4:57:02 PM
Record Drawing

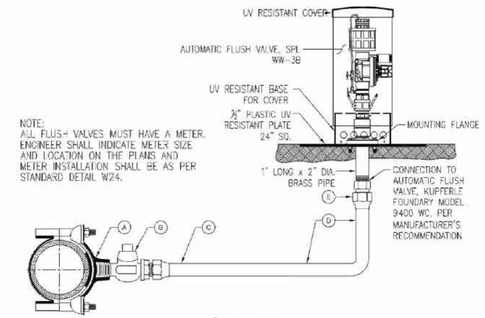

NOTE:
ALL FLUSH VALVES MUST HAVE A METER. ENGINEER SHALL INDICATE METER SIZE AND LOCATION ON THE PLANS AND METER INSTALLATION SHALL BE AS PER STANDARD DETAIL W24.

A. 2" SERVICE CLAMP
B. 2" CORPORATION STOP MALE THREAD INLET BY COMPRESSION OUTLET
C. 2" POLY TUBING WATER SERVICE EXTENDED BEYOND PAVEMENT
D. 2" POLY TUBING
E. 2" BRASS COUPLING, COMPRESSION x FIP

NOTES:
1. AUTOMATIC FLUSH VALVE MAY ALSO BE USED ON TAPPED PLUGS AND CAPS.
2. THE CONTRACTOR SHALL PROVIDE THE FLUSH VALVE ACCESS KEY TO CITY OF HUTTO WATER UPON FLUSH VALVE ACCEPTANCE.
3. METER BOX AND FLUSH VALVE SHALL NOT BE LOCATED IN A SIDEWALK, DRIVEWAY, PEDESTRIAN WAY OR TRAFFIC WAY.
4. A DRAINAGE WAY, CONTAINED WITHIN THE R.O.W. OR AN EASEMENT, SHALL BE PROVIDED FROM FLUSH VALVE TO STORM SEWER SYSTEM OR PUBLIC DRAINAGE WAY. THIS DRAINAGE WAY SHALL BE CONSTRUCTED OF CONCRETE OR OTHER CITY ENGINEER APPROVED MATERIAL TO PREVENT EROSION.
5. DESIGN ENGINEER SHALL PROVIDE CALCULATIONS WITH PLANS AT THE TIME OF REVIEW INCLUDING FREQUENCY AND FLUSH RATE REQUIRED TO CIRCULATE WATER IN DEAD END MAIN EVERY 72 HOURS.

CITY OF HUTTO CONSTRUCTION STANDARDS AND DETAILS	DRAWING NO.	W13
	UPDATED:	08/01/18
AUTOMATIC FLUSH VALVES ENGINEERING & PUBLIC WORKS	DRAWN BY:	BB
	SCALE:	N.T.S.
	FILE NAME:	W13.DWG

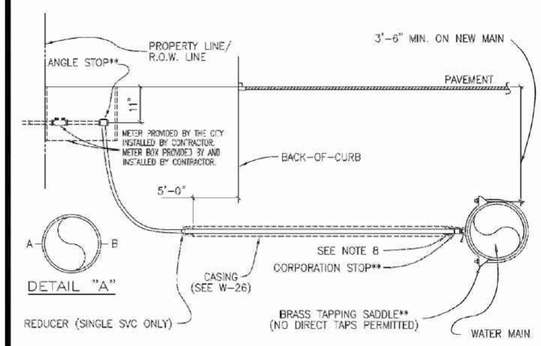

** = SEE DETAIL W-24 FOR SINGLE SERVICE PARTS
DETAIL W-25 FOR DOUBLE SERVICE PARTS

NOTES:
1. SUCCESSIVE TAPS INTO THE WATER MAIN SHALL BE SPACED A MINIMUM OF 18" OFFSET AND AT THE CENTERLINE AS SHOWN ON DETAIL "A".
2. WHERE NO SIDEWALK EXISTS, METER BOXES SHALL BE SET TO CONFORM TO FINISHED GRADE.
3. AUTHORIZED SERVICE LINE MATERIAL:
   A. POLYETHYLENE TUBING SHALL BE SDR-9. (MAX. DIA. 2") CLASS 200
4. ROTATE THE CORPORATION STOP SO THAT THE OPERATING NUT IS ACTUATED FROM THE VERTICAL POSITION RATHER THAN THE HORIZONTAL. SEE STD. RISER FOR CORP. STOP DETAIL. (DWG # W08).
5. SERVICE LINES SHALL BE CONTINUOUS FROM CORPORATION STOP TO ANGLE STOP WITH NO FITTINGS IN BETWEEN.
6. SERVICE CASING SHALL NOT BE INSTALLED BY WATER JETTING UNDER ROADWAY.
7. CASING REQUIRED FOR ALL PAVEMENT CROSSINGS. SEE W-26 FOR CASING DETAIL.
8. BEDDING PER CONSTRUCTION SPECIFICATIONS.
9. ANY VARIATIONS ON FITTINGS MUST BE APPROVED BY THE CITY ENGINEER.

CITY OF HUTTO CONSTRUCTION STANDARDS AND DETAILS	DRAWING NO.	W-03
	UPDATED:	11/11/11
TYP. WATER SERVICE – ELEVATION HUTTO UTILITY SYSTEMS	DRAWN BY:	MSL
	SCALE:	N.T.S.
	FILE NAME:	W03.DWG

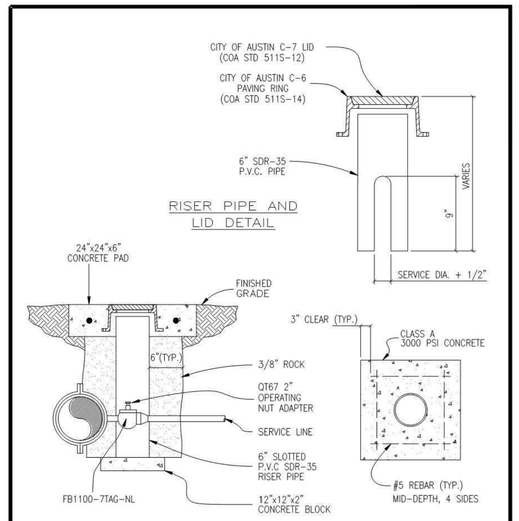

NOTES:
1. 1 1/2" & 2" CORPORATION STOP STOP
2. PAVING RING AND LID MATERIALS SHALL BE GRAY CAST IRON, ASTM A48, GRADE 30B.
3. FINISH PAVING RING AND LID BY REMOVING FINS AND FLASHING; PAINT WITH BLACK ASPHALT COATING.

CITY OF HUTTO CONSTRUCTION STANDARDS AND DETAILS	DRAWING NO.	W-28
	UPDATED:	11/27/17
1 1/2" & 2" CORPORATION STOP RISER HUTTO UTILITY SYSTEMS	DRAWN BY:	MSL
	SCALE:	N.T.S.
	FILE NAME:	W28.DWG

REV	DESCRIPTION	DATE	APR

DESIGNED BY: DAZ
REVIEWED BY: TMH
DRAWN BY: DAZ

BGE, INC.
1701 DIRECTORS BOULEVARD, SUITE 1000
AUSTIN, TX 78744
TBPE Registration No. F-1046
TEL: 512-879-0400 www.bowmgay.com

COTTONWOOD CREEK, PHASE II
HUTTO, TEXAS

WATER DETAILS (4 OF 4)

SUBMITTAL DATE: 03-15-2021

STATE OF TEXAS
TIMOTHY M. HOLLAND
94548
LICENSED
PROFESSIONAL ENGINEER
07/08/2021

SHEET
52 OF 54

G:\TXC\Projects\Lennar\8399-00-Cottonwood_PH2\LDV01_CADD\01_Shts\C-SP-DETL-PH-2.dwg Layout: WATER DETAILS (4 OF 4) Plotted: 7/7/2021 4:57:04 PM

Record Drawing

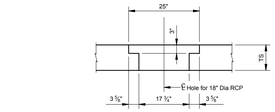

DETAIL "B"

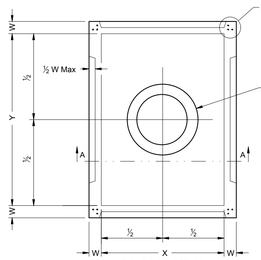

PLAN VIEW

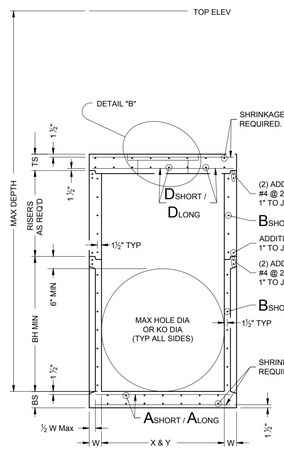

SECTION A-A

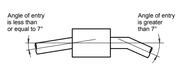

PIPE CONNECTION DETAIL

Connect pipes within 7° of normal to PJB wall.
If necessary, use pipe elbow or curved approach alignment to stay within this limit.

FABRICATION NOTES:
1. Provide Class "H" concrete in accordance with Item 421 and having a minimum compressive strength of 5,000 psi.
2. Provide Grade 60 reinforcing steel or equivalent area of WWR.
3. Provide typical clear cover of 1 ½" to reinforcing steel at interior or exterior walls.
4. Walls or slabs with a thickness of 8" or greater require shrinkage and temperature reinforcing steel. Provide steel area = 0.11 in²/ft each way.
5. No substitution is allowed for vertical and horizontal #4 bars in corners.
6. Manufacture base and risers to nearest 3" increment.
7. Design tongue and groove joints for full closure on both shoulders. Minimum spigot depth is ½".
8. Provide lifting devices in conformance with Manufacturer's recommendations.
9. See sheet PDD for sizes, dimensions, and reinforcing steel not shown.
10. Provide hole in below grade slab only when PJB is installed with inlet type POD.

INSTALLATION NOTES:
1. Inverts (benching) to be provided by Contractor. Concrete or mortar used for invert is subsidiary to junction box.
2. Seal tongue and groove joints with preformed or bulk mastic in conformance with Manufacturer's recommendations. Tongue and groove joints may be grouted no more than 1" between each section, or ½ the joint depth, whichever is greater.
3. Do not grout rubber gasket joints without Manufacturer's recommendation.
4. For rigid pipe, cut hole in thin wall panel (KO) 4" Max, 2" Min larger than pipe OD.
5. For flexible pipe, consult bootseal Manufacturer's specification for placement tolerance and hole size. Center pipe in hole and install bootseal per Manufacturer's specification.

GENERAL NOTES:
1. Precast Junction Box consists of base slab, base unit, risers (as required), and below grade slab. See sheet PDD for sizes.
2. Designed according to ASTM C913.
3. Payment for junction box is per Item 465 "Junction Boxes, Manholes, and Inlets" by type and size.

Cover dimensions are clear dimensions, unless noted otherwise.

HL93 LOADING

Texas Department of Transportation — Bridge Division Standard

PRECAST JUNCTION BOX

PJB

FILE:	preb00.dgn	CK: TxDOT	DW: TxDOT	CK: TxDOT	CK: TxDOT
©TxDOT	January 2015	CONT	SECT	JOB	HIGHWAY
REVISIONS		DIST		COUNTY	SHEET NO.

DISCLAIMER: The use of this standard is governed by the "Texas Engineering Practice Act". No warranty of any kind is made by TxDOT for any purpose whatsoever. TxDOT assumes no responsibility for the conversion of this standard to other formats or for incorrect results or damages resulting from its use.

DATE:
FILE:

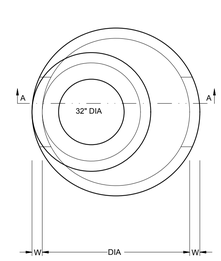

PLAN VIEW "A"

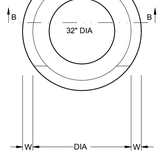

PLAN VIEW "B"

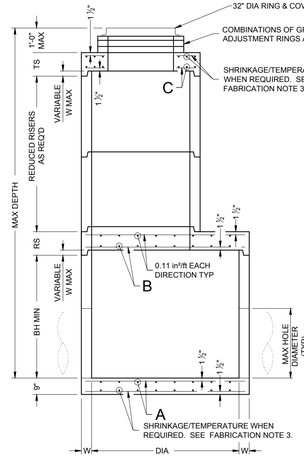

SECTION A-A

ROUND REDUCED RISER OPTION
SHOWING FLAT SLAB TOP

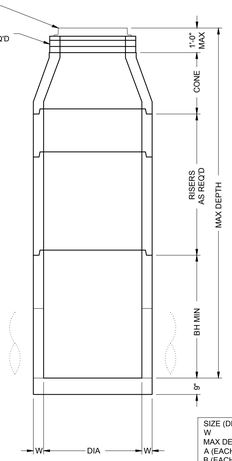

SECTION B-B

ROUND RISER OPTION
SHOWING CONE

FABRICATION NOTES:
1. Provide Class "H" concrete in accordance with Item 421 and having a minimum compressive strength of 5,000 psi.
2. Provide Grade 60 reinforcing steel or equivalent area of WWR. Provide circumferential reinforcing steel in vertical walls of base, riser and cone in accordance with ASTM C478.
3. Slabs with a thickness of 8" or greater require shrinkage and temperature reinforcing steel. Provide steel area = 0.11 in²/ft each way.
4. Manufacture base and risers to nearest 3" increment.
5. Design tongue and groove joints for full closure on both shoulders. Minimum spigot depth is ½".
6. Provide lifting devices in conformance with Manufacturer's recommendations.
7. Provide cast iron solid cover, unless noted otherwise elsewhere in the plans.

INSTALLATION NOTES:
1. Cones may be concentric or eccentric. Reduction cones are acceptable. See Manufacturer for cone dimensions.
2. Inverts (benching) to be provided by Contractor. Concrete or mortar used for invert is subsidiary to this item.
3. Seal tongue and groove joints with preformed or bulk mastic in conformance with Manufacturer's recommendations. Tongue and groove joints may be grouted no more than 1" between each section, or ½ the joint depth, whichever is greater.
4. Do not grout rubber gasket joints without Manufacturer's recommendation.
5. Initial installation of grade adjustment rings is limited to 1'-0" Max as shown.
6. Grade adjustment rings may be increased to 2'-0" Max when future construction affects final grade of structure. Make adjustments greater than 2'-0" with additional risers. Adjustments may be made up to the Max depth shown. Structure must be evaluated if Max depth will be exceeded.

GENERAL NOTES:
1. Designed according to ASTM C478.
2. Payment for manhole is per Item 465, "Junction Boxes, Manholes, and Inlets" by type and size.
3. Pipe OD + placement tolerance must be equal or less than Max hole diameter. For rigid pipe, placement tolerance is 4" Max, 2" Min. For flexible pipe, consult bootseal manufacturer's specification for placement tolerance.

Cover dimensions are clear dimensions, unless noted otherwise.

SIZE (DIA)	48 in	60 in	72 in
W	5 in	6 in	7 in
MAX DEPTH	25 ft	25 ft	25 ft
A (EACH WAY)	0.22 in²/ft	0.30 in²/ft	0.45 in²/ft
B (EACH WAY)	N/A	0.37 in²/ft	0.62 in²/ft
C (EACH WAY)	0.24 in²/ft	0.46 in²/ft	0.46 in²/ft
BH MIN	12 in	36 in	36 in
TS	9 in	9 in	9 in
RS	N/A	9 in	12 in
REDUCED RISER DIA	N/A	48 in	48/60 in
MAX HOLE DIA	32 in	40 in	54 in

HL93 LOADING

Texas Department of Transportation — Bridge Division Standard

PRECAST ROUND MANHOLE

PRM

FILE:	preb00.dgn	CK: TxDOT	DW: TxDOT	CK: TxDOT	CK: TxDOT
©TxDOT	January 2015	CONT	SECT	JOB	HIGHWAY
REVISIONS		DIST		COUNTY	SHEET NO.

DISCLAIMER: The use of this standard is governed by the "Texas Engineering Practice Act". No warranty of any kind is made by TxDOT for any purpose whatsoever. TxDOT assumes no responsibility for the conversion of this standard to other formats or for incorrect results or damages resulting from its use.

DATE:
FILE:

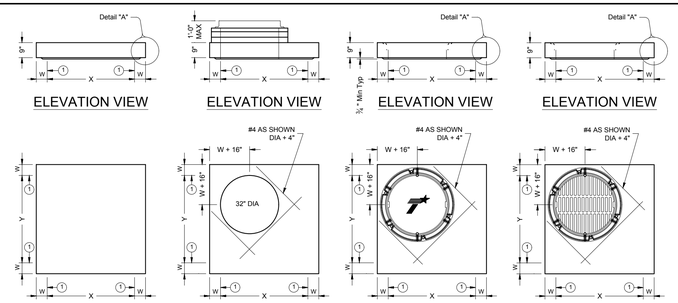

ELEVATION VIEW | ELEVATION VIEW | ELEVATION VIEW | ELEVATION VIEW

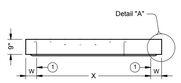

STYLE 'FG'

PLAN VIEW
NO OPENINGS
STYLE 'SL'

PLAN VIEW
SHIP LOOSE RING & COVER
STYLE 'RH'

PLAN VIEW
32" DIA CAST-IN RING & COVER
STYLE 'RC'

PLAN VIEW
32" DIA CAST-IN RING & GRATE
STYLE 'RG'

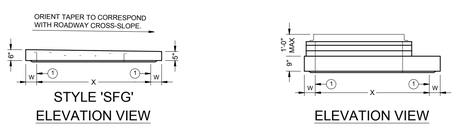

STYLE 'SFG'
ELEVATION VIEW

ELEVATION VIEW

ELEVATION VIEW

(1) Matches inside face of wall of precast base or riser below inlet.

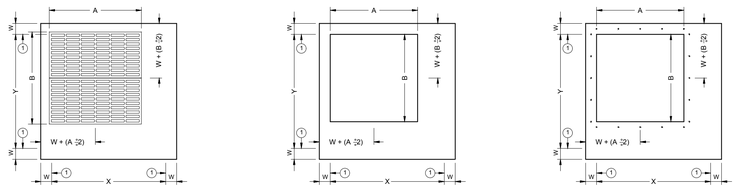

PLAN VIEW
CAST-IN FRAME & GRATE
STYLES 'FG' & 'SFG'

PLAN VIEW
SHIP LOOSE FRAME & GRATE
STYLE 'SH'

PLAN VIEW
EXPOSED REBAR
STYLE 'S1'

HL93 LOADING — SHEET 1 OF 2

Texas Department of Transportation — Bridge Division Standard

PRECAST SLAB LID

PSL

FILE:	preslb00.dgn	CK: TxDOT	DW: TxDOT	CK: TxDOT	CK: TxDOT
©TxDOT	January 2015	CONT	SECT	JOB	HIGHWAY
REVISIONS		DIST		COUNTY	SHEET NO.

DISCLAIMER: The use of this standard is governed by the "Texas Engineering Practice Act". No warranty of any kind is made by TxDOT for any purpose whatsoever. TxDOT assumes no responsibility for the conversion of this standard to other formats or for incorrect results or damages resulting from its use.

DATE:
FILE:

Short Span Reinf Steel Style	Long Span Reinf Steel Style	Size (X x Y) W	(2) x B (nominal)	Area	Area
SL		3'x3'	6"	n/a	0.37 in²/ft	0.37 in²/ft
RH,RC,RG,SH,S1,FG		3'x3'	6"	3'x3' or 32" Dia	0.37 in²/ft	0.37 in²/ft
SFG		3'x3'	6"	3'x3'	0.32 in²/ft	0.32 in²/ft
SL		4'x4'	6"	n/a	0.34 in²/ft	0.34 in²/ft
RH,RC,RG,SH,S1,FG		4'x4'	6"	3'x3' or 32" Dia	0.41 in²/ft	0.41 in²/ft
SH,S1,FG		4'x4'	6"	4'x4'	0.41 in²/ft	0.41 in²/ft
SFG		4'x4'	6"	4'x4'	0.32 in²/ft	0.32 in²/ft
SL		3'x5'	6"	n/a	0.39 in²/ft	0.39 in²/ft
RH,RC,RG,SH,S1,FG		3'x5'	6"	3'x3' or 32" Dia	0.48 in²/ft	0.48 in²/ft
SH,S1,FG		3'x5'	6"	3'x5'	0.48 in²/ft	0.48 in²/ft
SFG		3'x5'	6"	3'x5'	0.32 in²/ft	0.32 in²/ft
SL		4'x5'	6"	n/a	0.42 in²/ft	0.42 in²/ft
RH,RC,RG,SH,S1,FG		4'x5'	6"	3'x3' or 32" Dia	0.42 in²/ft	0.42 in²/ft
SH,S1,FG		4'x5'	6"	4'x4'	0.63 in²/ft	0.63 in²/ft
SH,S1,FG		4'x5'	6"	3'x5'	0.66 in²/ft	0.66 in²/ft
SL		5'x5'	6"	n/a	0.36 in²/ft	0.36 in²/ft
RH,RC,RG,SH,S1,FG		5'x5'	6"	3'x3' or 32" Dia	0.43 in²/ft	0.43 in²/ft
SH,S1,FG		5'x5'	6"	4'x4'	0.63 in²/ft	0.63 in²/ft
SH,S1,FG		5'x5'	6"	3'x5'	0.63 in²/ft	0.63 in²/ft
SL		5'x6'	6"/8"	n/a	0.48 in²/ft	0.48 in²/ft
RH,RC,RG,SH,S1,FG		5'x6'	6"/8"	3'x3' or 32" Dia	0.48 in²/ft	0.48 in²/ft
SH,S1,FG		5'x6'	6"/8"	4'x4'	0.60 in²/ft	0.60 in²/ft
SH,S1,FG		5'x6'	6"/8"	3'x5'	0.60 in²/ft	0.60 in²/ft
SL		6'x6'	6"/8"	n/a	0.43 in²/ft	0.43 in²/ft
RH,RC,RG,SH,S1,FG		6'x6'	6"/8"	3'x3' or 32" Dia	0.56 in²/ft	0.56 in²/ft
SH,S1,FG		6'x6'	6"/8"	4'x4'	0.56 in²/ft	0.56 in²/ft
SH,S1,FG		6'x6'	6"/8"	3'x5'	0.59 in²/ft	0.59 in²/ft
SL		8'x8'	8"/10" n/a		0.45 in²/ft	0.45 in²/ft
RH,RC,RG,SH,S1,FG		8'x8'	8"/10" 3'x3' or 32" Dia		0.45 in²/ft	0.45 in²/ft
SH,S1,FG		8'x8'	8"/10" 4'x4'		0.45 in²/ft	0.45 in²/ft
SH,S1,FG		8'x8'	8"/10" 3'x5'		0.45 in²/ft	0.45 in²/ft

(2) See sheet PDD for corresponding wall thickness (W) of base unit or riser.

Construct cast-in-place reinforced concrete apron, when shown elsewhere in plans. Use Class "A" concrete. Apron is subsidiary to PSL. Apron is 1'-6" Min width around precast zone drain.

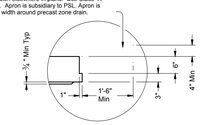

DETAIL "A"
(Reinforcing not shown for clarity)

When an apron is to be cast around PSL, use detail above to create an apron ledge on all 4 sides.

FABRICATION NOTES:
1. Locate penetration (Style 'RH'), ring and cover (Style 'RC'), ring and grate (Style 'RG'), and frame and grate (Style 'FG') in a corner. Only one penetration is allowed per slab lid.
2. Provide Class "H" concrete in accordance with Item 421 and having a minimum compressive strength of 5,000 psi.
3. Provide Grade 60 reinforcing steel or equivalent area of WWR.
4. Provide clear cover of ¾" to reinforcing from lower outside shoulder of slab for structural reinforcement, and 2" from top of slab for shrinkage and temperature reinforcement. Place short span reinforcing closest to surface.
5. Slabs with a thickness of 8" or greater require shrinkage and temperature reinforcing. Provide steel area = 0.11 in²/ft each way.
6. No substitution is allowed for diagonal #4 bars around openings.
7. Design tongue and groove joints for full closure on both shoulders. Minimum spigot depth is ½".
8. Provide lifting devices in conformance with Manufacturer's recommendations.

INSTALLATION NOTES:
1. Precast slab lids are intended for direct traffic and may be placed in roadway.
2. Seal tongue and groove joints with preformed or bulk mastic in conformance with Manufacturer's recommendations. Tongue and groove joints may be grouted no more than 1" between each section, or ½ the joint depth, whichever is greater.
3. Do not grout rubber gasket joints without Manufacturer's recommendation.
4. Initial installation of grade adjustment rings for Styles 'RH' and 'SH' is limited to 1'-0" Max as shown.
5. Grade adjustment rings for Styles 'RH' and 'SH' may be increased to 2'-0" Max when future construction affects final grade of structure. Make adjustments greater than 2'-0" with additional risers. Adjustments can be made up to Max depth shown on sheet PDD. Structure must be evaluated if Max depth will be exceeded.
6. Orient long dimension of grate slots perpendicular to traffic, unless noted otherwise on plans

GENERAL NOTES:
1. Designed according to ASTM C913.
2. Payment for lid is per Item 465, "Junction Boxes, Manholes, and Inlets" by type, style, size, and opening size (when applicable).

Cover dimensions are clear dimensions, unless noted otherwise.

HL93 LOADING — SHEET 2 OF 2

Texas Department of Transportation — Bridge Division Standard

PRECAST SLAB LID

PSL

FILE:	preslb00.dgn	CK: TxDOT	DW: TxDOT	CK: TxDOT	CK: TxDOT
©TxDOT	January 2015	CONT	SECT	JOB	HIGHWAY
REVISIONS		DIST		COUNTY	SHEET NO.

						APR
						DATE
						DESCRIPTION
◁	◁	◁	◁	◁	◁	REV

DESIGNED BY: DAZ
REVIEWED BY: TMH
DRAWN BY: DAZ

BGE, INC.
1701 DIRECTORS BOULEVARD, SUITE 1000
AUSTIN, TX 78744
TBPE Registration No. F-1046
TEL: 512-879-0400 www.bgeinc.com

COTTONWOOD CREEK, PHASE II
HUTTO, TEXAS

TXDOT DETAILS (1 OF 2)

SUBMITTAL DATE: 03-15-2021

STATE OF TEXAS — TIMOTHY M. HOLLAND — 94548 — LICENSED PROFESSIONAL ENGINEER — 07/08/2021

SHEET
53 OF 54

Record Drawing

G:\TXCDProjects\Lennar\8399-00-Cottonwood_PH2\LD\01_CADD\01_Shts\C-SP-DETL-PH-2.dwg Layout: TxDOT DETAILS (1 OF 2) Plotted: 7/8/2021 3:07:10 PM

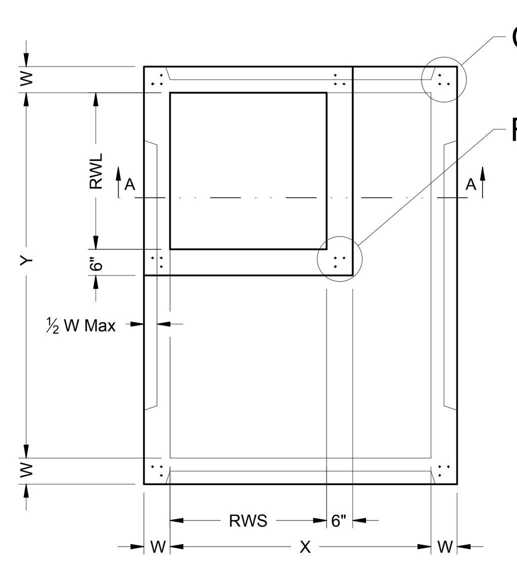

PLAN VIEW "A"
SQUARE REDUCED RISER OPTION

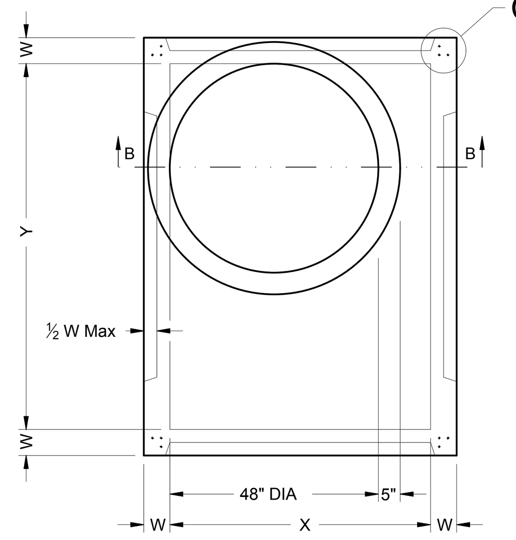

PLAN VIEW "B"
ROUND REDUCED RISER OPTION

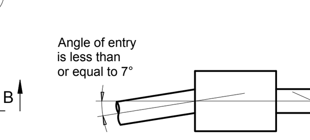

PIPE CONNECTION DETAIL

Connect pipes within 7° of normal to PB wall. If necessary, use pipe elbow or curved approach alignment to stay within this limit.

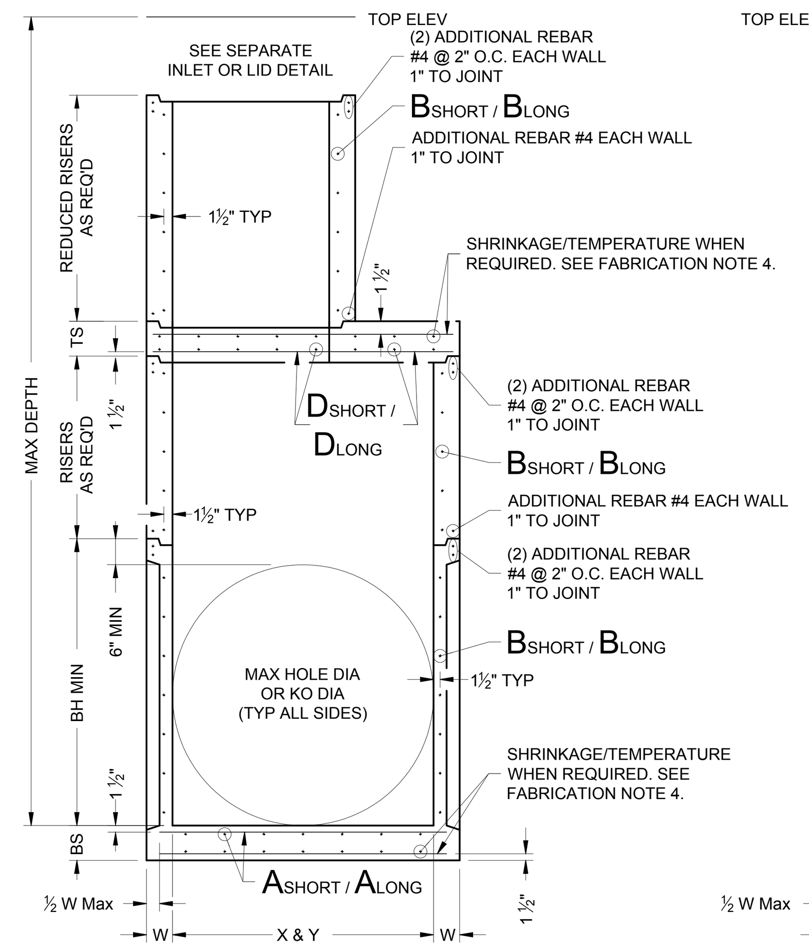

SECTION A-A
SQUARE REDUCED RISER OPTION

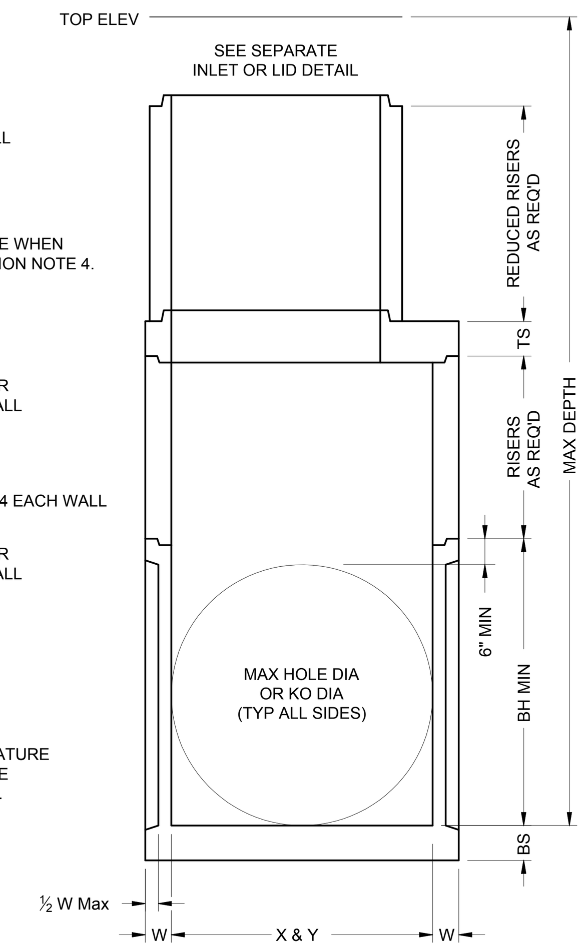

SECTION B-B
ROUND REDUCED RISER OPTION

Cover dimensions are clear dimensions, unless noted otherwise.

FABRICATION NOTES:
1. Provide Class "H" concrete in accordance with Item 421 and having a minimum compressive strength of 5,000 psi.
2. Provide Grade 60 reinforcing steel or equivalent area of WWR.
3. Provide typical clear cover of 1 ½" to reinforcing steel at interior or exterior walls.
4. Walls or slabs with a thickness of 8" or greater require shrinkage and temperature reinforcing steel. Provide steel area = 0.11 in^2/ft each way.
5. No substitution is allowed for vertical and horizontal #4 bars in corners.
6. Manufacture base and risers to nearest 3" increment.
7. Design tongue and groove joints for full closure on both shoulders. Minimum spigot depth is ¾".
8. Provide lifting devices in conformance with Manufacturer's recommendations.
9. See sheet PDD for sizes, dimensions, and reinforcing steel not shown.

INSTALLATION NOTES:
1. Inverts (benching) to be provided by Contractor. Concrete or mortar used for invert is subsidiary to specified inlet or manhole.
2. Seal tongue and groove joints with preformed or bulk mastic in conformance with Manufacturer's recommendations. Tongue and groove joints may be grouted no more than 1" between each section, or ½ the joint depth, whichever is greater.
3. Do not grout rubber gasket joints without Manufacturer's recommendation.
4. For rigid pipe, cut hole in thin wall panel (KO) 4" Max, 2" Min larger than pipe OD.
5. For flexible pipe, consult boot/seal Manufacturer's specification for placement tolerance and hole size. Center pipe in hole and install boot/seal per Manufacturer's specification.

GENERAL NOTES:
1. Precast Base consists of base slab, base unit, risers (as required), reducing slab (as required), and reduced risers (as required). See sheet PDD for sizes.
2. Designed according to ASTM C913.
3. Payment for precast base is subsidiary to the specified inlet, per Item 465, "Junction Boxes, Manholes, and Inlets."

DISCLAIMER: The use of this standard is governed by the "Texas Engineering Practice Act". No warranty of any kind is made by TxDOT for any purpose whatsoever. TxDOT assumes no responsibility for the conversion of this standard to other formats or for incorrect results or damages resulting from its use.

DATE:
FILE:

HL93 LOADING

Texas Department of Transportation — Bridge Division Standard

PRECAST BASE

PB

FILE: prestd01.dgn | DN: TxDOT | CK: TxDOT | DW: TxDOT | CK: TxDOT
©TxDOT January 2015 | CONT | SECT | JOB | HIGHWAY
REVISIONS | DIST | COUNTY | SHEET NO.

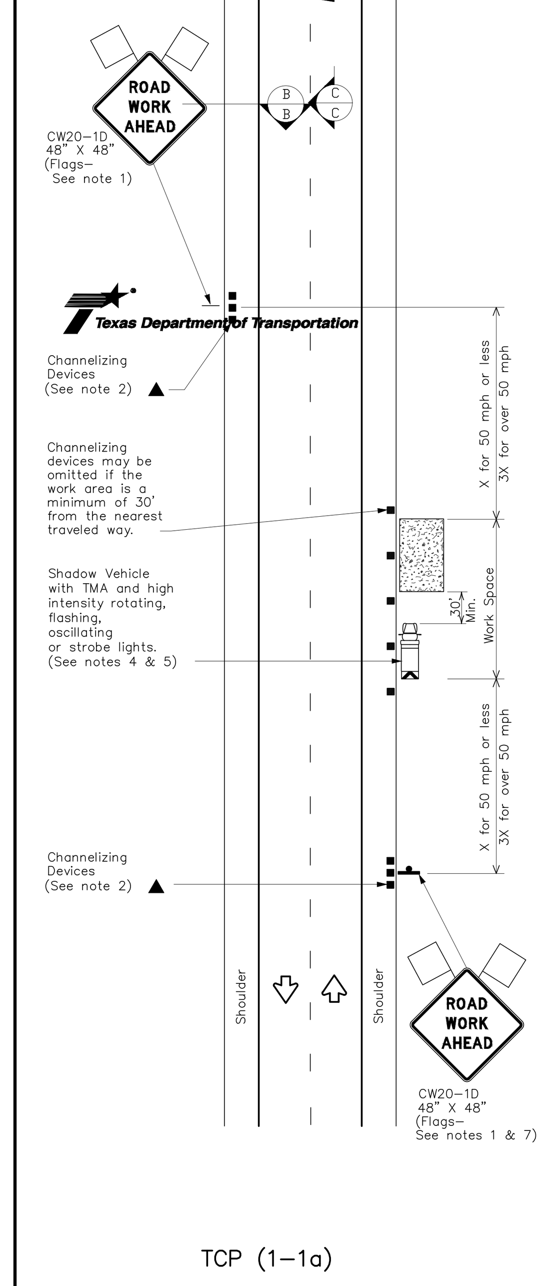

TCP (1-1a)

WORK SPACE NEAR SHOULDER
Conventional Roads

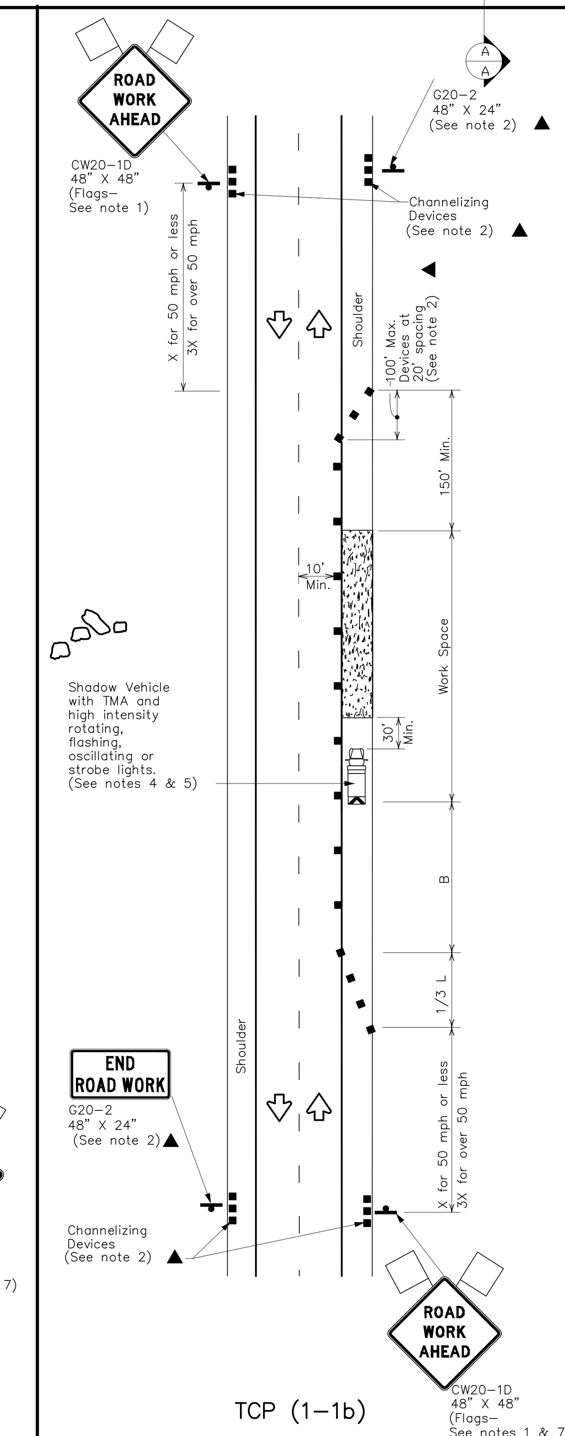

TCP (1-1b)

WORK SPACE ON SHOULDER
Conventional Roads

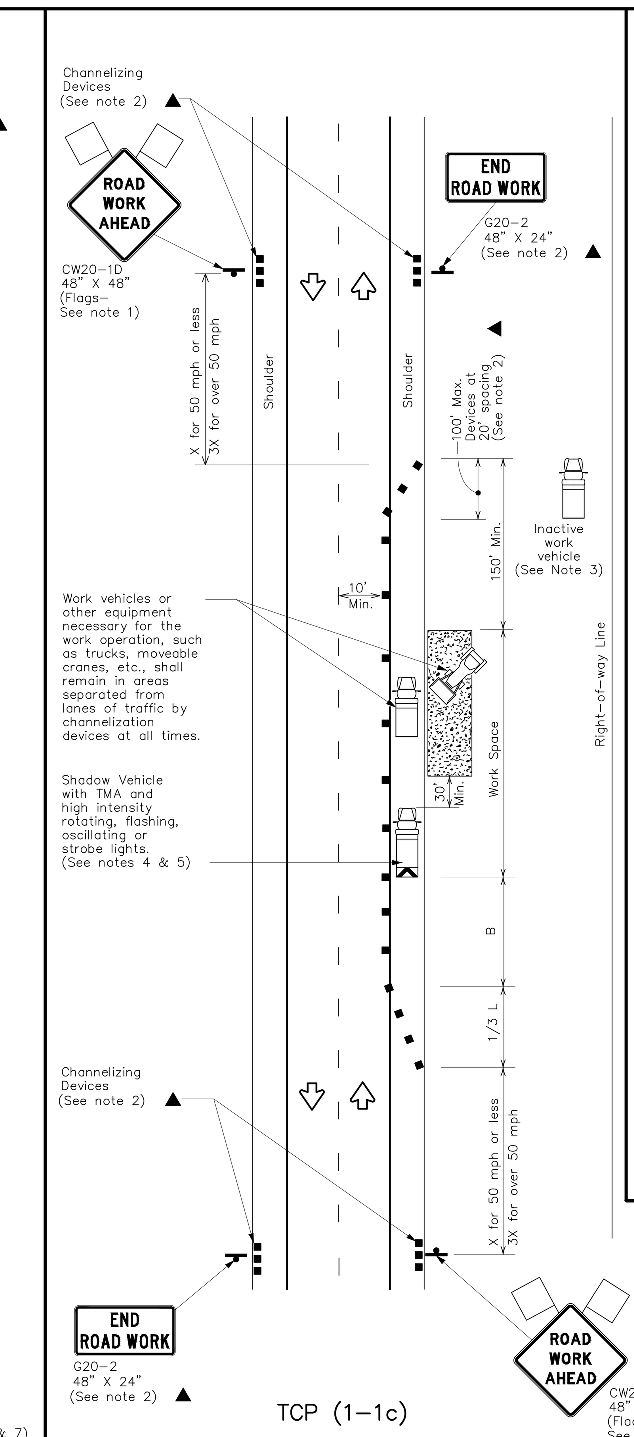

TCP (1-1c)

WORK VEHICLES ON SHOULDER
Conventional Roads

LEGEND

Symbol	Description	Symbol	Description
	Type 3 Barricade		Channelizing Devices
	Heavy Work Vehicle		Truck Mounted Attenuator (TMA)
	Trailer Mounted Flashing Arrow Board		Portable Changeable Message Sign (PCMS)
	Sign		Traffic Flow
	Flag		Flagger

Posted Speed *	Formula	Minimum Desirable Taper Lengths ** 10' Offset	11' Offset	12' Offset	Suggested Maximum Spacing of Channelizing Devices On a Taper	On a Tangent	Minimum Sign Spacing "X" Distance	Suggested Longitudinal Buffer Space "B"
30	$L=\frac{WS^2}{60}$	150'	165'	180'	30'	60'	120'	90'
35		205'	225'	245'	35'	70'	160'	120'
40		265'	295'	320'	40'	80'	240'	155'
45	L=WS	450'	495'	540'	45'	90'	320'	195'
50		500'	550'	600'	50'	100'	400'	240'
55		550'	605'	660'	55'	110'	500'	295'
60		600'	660'	720'	60'	120'	600'	350'
65		650'	715'	780'	65'	130'	700'	410'
70		700'	770'	840'	70'	140'	800'	475'
75		750'	825'	900'	75'	150'	900'	540'

* Conventional Roads Only
** Taper lengths have been rounded off.
L=Length of Taper(FT) W=Width of Offset(FT) S=Posted Speed(MPH)

TYPICAL USAGE

MOBILE	SHORT DURATION	SHORT TERM STATIONARY	INTERMEDIATE TERM STATIONARY	LONG TERM STATIONARY
	✓	✓		

GENERAL NOTES
1. Flags attached to signs where shown are REQUIRED.
2. All traffic control devices illustrated are REQUIRED, except those denoted with the triangle symbol may be omitted when stated elsewhere in the plans, or for routine maintenance work, when approved by the Engineer.
3. Inactive work vehicles or other equipment should be parked near the right-of-way line and not parked on the paved shoulder.
4. A Shadow Vehicle with a TMA should be used anytime it can be positioned 30 to 100 feet in advance of the area of crew exposure without adversely affecting the performance or quality of the work. If workers are no longer present but road or work conditions require the traffic control to remain in place, Type 3 Barricades or other channelizing devices may be substituted for the Shadow Vehicle and TMA.
5. Additional Shadow Vehicles with TMAs may be positioned off the paved surface, next to those shown in order to protect wider work spaces.
6. See TCP(5-1)for shoulder work on divided highways, expressways and freeways.
7. CW21-5 "SHOULDER WORK" signs may be used in place of CW20-1D "ROAD WORK AHEAD" signs for shoulder work on conventional roadways.

DISCLAIMER: The use of this standard is governed by the "Texas Engineering Practice Act". No warranty of any kind is made by TxDOT for any purpose whatsoever. TxDOT assumes no responsibility for the conversion of this standard to other formats or for incorrect results or damages resulting from its use.

DATE:
FILE:

Texas Department of Transportation — Traffic Operations Division Standard

TRAFFIC CONTROL PLAN CONVENTIONAL ROAD SHOULDER WORK

TCP(1-1)-18

FILE: tcp1-1-18.dgn | DN: | CK: | DW: | CK:
©TxDOT December 1985 | CONT | SECT | JOB | HIGHWAY
REVISIONS 2-94 4-98 8-95 2-12 1-97 2-18 | DIST | COUNTY | SHEET NO.
151

	Size	MAX DEPTH = 15 ft. to top of BASE SLAB — Base Slab: Short SpanReinf SteelArea	Long SpanReinf SteelArea	Thickness	Base Unit orRiser Walls: Short SpanReinf SteelArea	Long SpanReinf SteelArea	Thickness	Below Grade Slab (w/PJB)Reducing Slab (w/PB): Reduced Riser Size	Short SpanReinf SteelArea	Long SpanReinf SteelArea	Thickness	MAX DEPTH = 25 ft. to top of BASE SLAB — Base Slab: Short SpanReinf SteelArea	Long SpanReinf SteelArea	Thickness	Base Unit orRiser Walls: Short SpanReinf SteelArea	Long SpanReinf SteelArea	Thickness	Below Grade Slab (w/PJB)Reducing Slab (w/PB): Reduced Riser Size	Short SpanReinf SteelArea	Long SpanReinf SteelArea	Thickness	Min Height (See Gen Note 3)	Max HOLE DIA (See Fab Note 2)	Max KO DIA (See Fab Note 2)
	X x Y	Ashort	Along	BS	Bshort	Blong	W	RWSxRWLor ID	Dshort	Dlong	TS	Ashort	Along	BS	Bshort	Blong	W	RWSxRWLor ID	Dshort	Dlong	TS	BH MIN	HOLE DIA	KO DIA
	ft.	in^2/ft	in^2/ft	in.	in^2/ft	in^2/ft	in.	ft. **	in^2/ft	in^2/ft	in.	in^2/ft	in^2/ft	in.	in^2/ft	in^2/ft	in.	ft. **	in^2/ft	in^2/ft	in.	ft.	in.	in.
Precast Junction Box (PJB)	3x3	0.23	0.23	6	0.19	0.19	6	N/A	0.37	0.37	9	0.29	0.29	6	0.24	0.24	6	N/A	0.37	0.37	9	3.5	36	36
	4x4	0.29	0.29	6	0.24	0.24	6	N/A	0.41	0.41	9	0.47	0.47	6	0.38	0.38	6	N/A	0.41	0.41	9	4.5	48	48
	3x5	0.29	0.18	6	0.19	0.35	6	N/A	0.48	0.48	9	0.39	0.18	6	0.23	0.59	6	N/A	0.48	0.48	9	3.5	36/60	36/60
	4x5	0.36	0.18	6	0.22	0.34	6	N/A	0.42	0.42	9	0.53	0.26	6	0.39	0.59	6	N/A	0.42	0.42	9	4.5	48/60	48/60
	5x5	0.36	0.36	6	0.34	0.34	6	N/A	0.43	0.43	9	0.62	0.62	6	0.59	0.59	6	N/A	0.43	0.43	9	5.5	60	60
	5x6	0.27	0.27	9	0.34	0.45	6	N/A	0.48	0.48	9	0.47	0.45	9	0.38	0.54	8	N/A	0.48	0.48	9	5.5	60/72	60/72
	6x6	0.27	0.27	9	0.45	0.45	6	N/A	0.56	0.56	9	0.52	0.52	9	0.54	0.54	8	N/A	0.56	0.56	9	6.5	72	72
	8x8	0.46	0.46	9	0.51	0.51	8	N/A	0.45	0.45	12	0.87	0.87	9	0.59	0.59	10	N/A	0.45	0.45	12	8.5	96	72
Precast Base (PB)	3x3	0.23	0.23	6	0.19	0.19	6	N/A	N/A	N/A	N/A	0.29	0.29	6	0.24	0.24	6	N/A	N/A	N/A	N/A	3.5	36	36
	4x4	0.29	0.29	6	0.24	0.24	6	N/A	N/A	N/A	N/A	0.47	0.47	6	0.38	0.38	6	N/A	N/A	N/A	N/A	4.5	48	48
	3x5	0.29	0.18	6	0.19	0.35	6	3x3	0.30	0.34	9	0.39	0.18	6	0.23	0.59	6	3x3	0.40	0.40	9	3.5	36/60	36/60
	4x5	0.36	0.18	6	0.22	0.34	6	3x3	0.30	0.30	9	0.53	0.26	6	0.39	0.59	6	3x3	0.46	0.37	9	4.5	48/60	48/60
	4x5	0.36	0.18	6	0.22	0.34	6	4x4	0.30	0.30	9	0.53	0.26	6	0.39	0.59	6	4x4	0.39	0.39	9	4.5	48/60	48/60
	4x5	0.36	0.18	6	0.22	0.34	6	48"	0.39	0.39	9	0.53	0.26	6	0.39	0.59	6	48"	0.47	0.47	9	4.5	48/60	48/60
	4x5	0.36	0.18	6	0.22	0.34	6	3x5	0.33	0.40	9	0.53	0.26	6	0.39	0.59	6	3x5	0.48	0.48	9	4.5	48/60	48/60
	5x5	0.36	0.36	6	0.34	0.34	6	3x3	0.34	0.34	9	0.62	0.62	6	0.59	0.59	6	3x3	0.53	0.53	9	5.5	60	60
	5x5	0.36	0.36	6	0.34	0.34	6	4x4	0.36	0.36	9	0.62	0.62	6	0.59	0.59	6	4x4	0.64	0.64	9	5.5	60	60
	5x5	0.38	0.38	6	0.34	0.34	6	48"	0.36	0.36	9	0.62	0.62	6	0.59	0.59	6	48"	0.64	0.64	9	5.5	60	60
	5x5	0.36	0.36	6	0.34	0.34	6	3x5	0.34	0.40	9	0.62	0.62	6	0.59	0.59	6	3x5	0.53	0.53	9	5.5	60	60
	5x6	0.31	0.31	9	0.34	0.45	6	3x3	0.34	0.34	9	0.47	0.45	9	0.38	0.54	8	3x3	0.61	0.50	9	5.5	60/72	60/72
	5x6	0.27	0.27	9	0.34	0.45	6	4x4	0.36	0.45	9	0.47	0.45	9	0.38	0.54	8	4x4	0.74	0.57	9	5.5	60/72	60/72
	5x6	0.29	0.29	9	0.34	0.45	6	48"	0.36	0.45	9	0.47	0.45	9	0.38	0.54	8	48"	0.74	0.57	9	5.5	60/72	60/72
	5x6	0.29	0.29	9	0.34	0.45	6	3x5	0.45	0.45	9	0.47	0.45	9	0.38	0.54	8	3x5	0.61	0.61	9	5.5	60/72	60/72
	6x6	0.29	0.29	9	0.45	0.45	6	3x3	0.41	0.41	9	0.52	0.52	9	0.54	0.54	8	3x3	0.74	0.74	9	6.5	72	72
	6x6	0.27	0.27	9	0.45	0.45	6	4x4	0.45	0.45	9	0.52	0.52	9	0.54	0.54	8	4x4	0.87	0.87	9	6.5	72	72
	6x6	0.29	0.29	9	0.45	0.45	6	48"	0.45	0.45	9	0.52	0.52	9	0.54	0.54	8	48"	0.87	0.87	9	6.5	72	72
	6x6	0.29	0.29	9	0.45	0.45	6	3x5	0.45	0.45	9	0.52	0.52	9	0.54	0.54	8	3x5	0.87	0.87	9	6.5	72	72
	8x8	0.52	0.52	9	0.51	0.51	8	3x3	0.61	0.61	12	0.91	0.91	9	0.70	0.70	10	3x3	0.85	0.85	12	8.5	96	72
	8x8	0.52	0.52	9	0.51	0.51	8	4x4	0.70	0.70	12	0.87	0.87	9	0.70	0.70	10	4x4	1.01	1.01	12	8.5	96	72
	8x8	0.52	0.52	9	0.51	0.51	8	48"	0.70	0.70	12	0.87	0.87	9	0.70	0.70	10	48"	1.01	1.01	12	8.5	96	72
	8x8	0.52	0.52	9	0.51	0.51	8	3x5	0.70	0.85	12	0.87	0.87	9	0.70	0.70	10	3x5	1.01	1.01	12	8.5	96	72

** Unless otherwise indicated.

FABRICATION NOTES:
1. Maximum spacing of reinforcement is 8".
2. At manufacturer's option, provide cast or cored holes or thin wall panels (KO) to the maximum diameter shown for each. When no penetration is required, it is acceptable to provide a wall with no sectional reduction.

GENERAL NOTES:
1. Precast Junction Box consists of base slab, base unit, risers (as required), and below grade slab. See sheet PJB for details.
2. Precast Base consists of base slab, base unit, risers (as required), reducing slab (as required), and reduced risers (as required). See sheet PB for details.
3. Min Height shown is for stock base units. Use stock base units whenever practical. Smaller height base units can be used in special installation circumstances, when noted elsewhere in the plans. Absolute minimum height of base units is 2'-6".

DISCLAIMER: The use of this standard is governed by the "Texas Engineering Practice Act". No warranty of any kind is made by TxDOT for any purpose whatsoever. TxDOT assumes no responsibility for the conversion of this standard to other formats or for incorrect results or damages resulting from its use.

DATE:
FILE:

HL93 LOADING

Texas Department of Transportation — Bridge Division Standard

DESIGN DATA FOR PRECAST BASE AND JUNCTION BOX

PDD

FILE: prestd10.dgn | DN: TxDOT | CK: TxDOT | DW: TxDOT | CK: TxDOT
©TxDOT January 2015 | CONT | SECT | JOB | HIGHWAY
REVISIONS | DIST | COUNTY | SHEET NO.

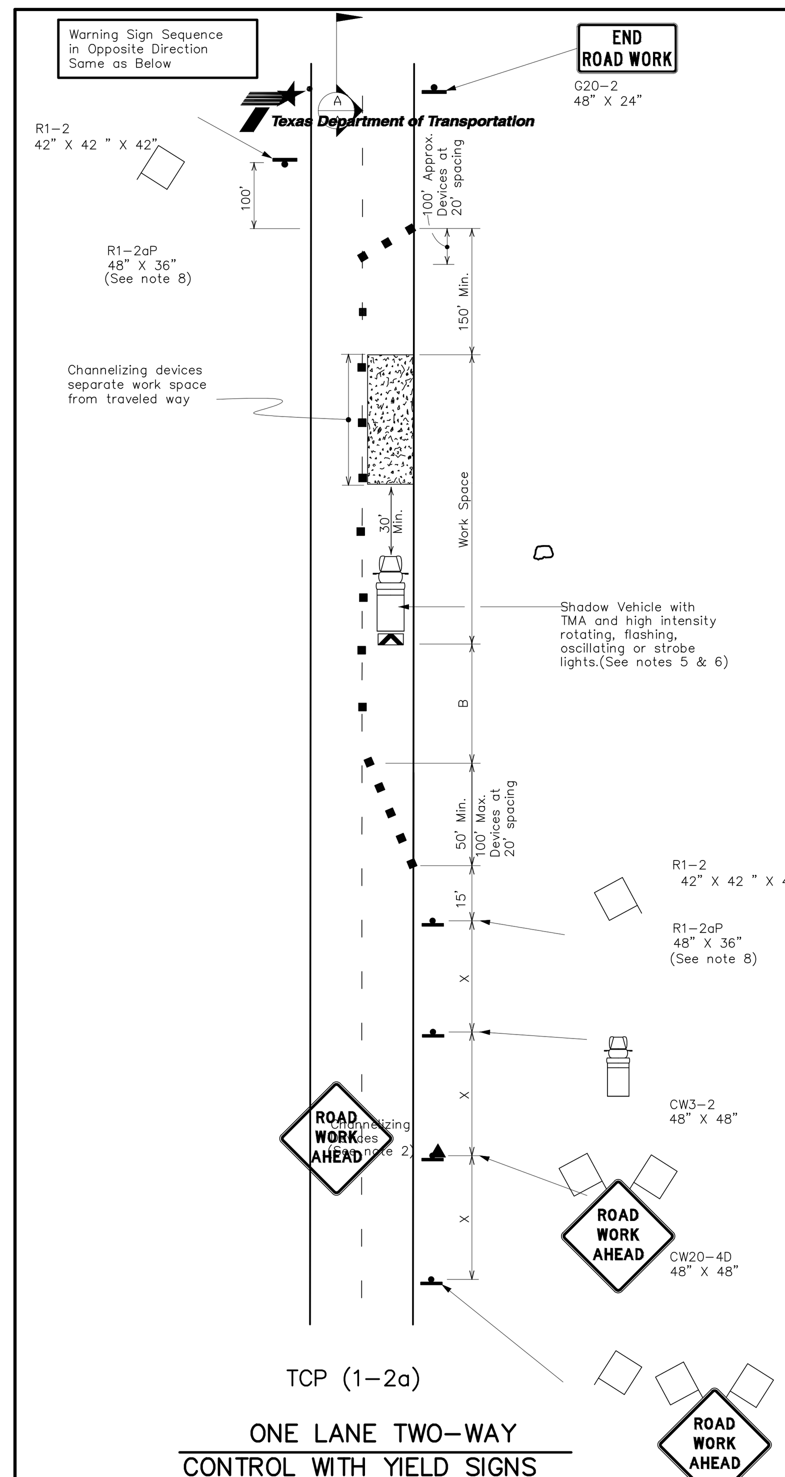

TCP (1-2a)

ONE LANE TWO-WAY
CONTROL WITH YIELD SIGNS
(Less than 2000 ADT - See note 7)

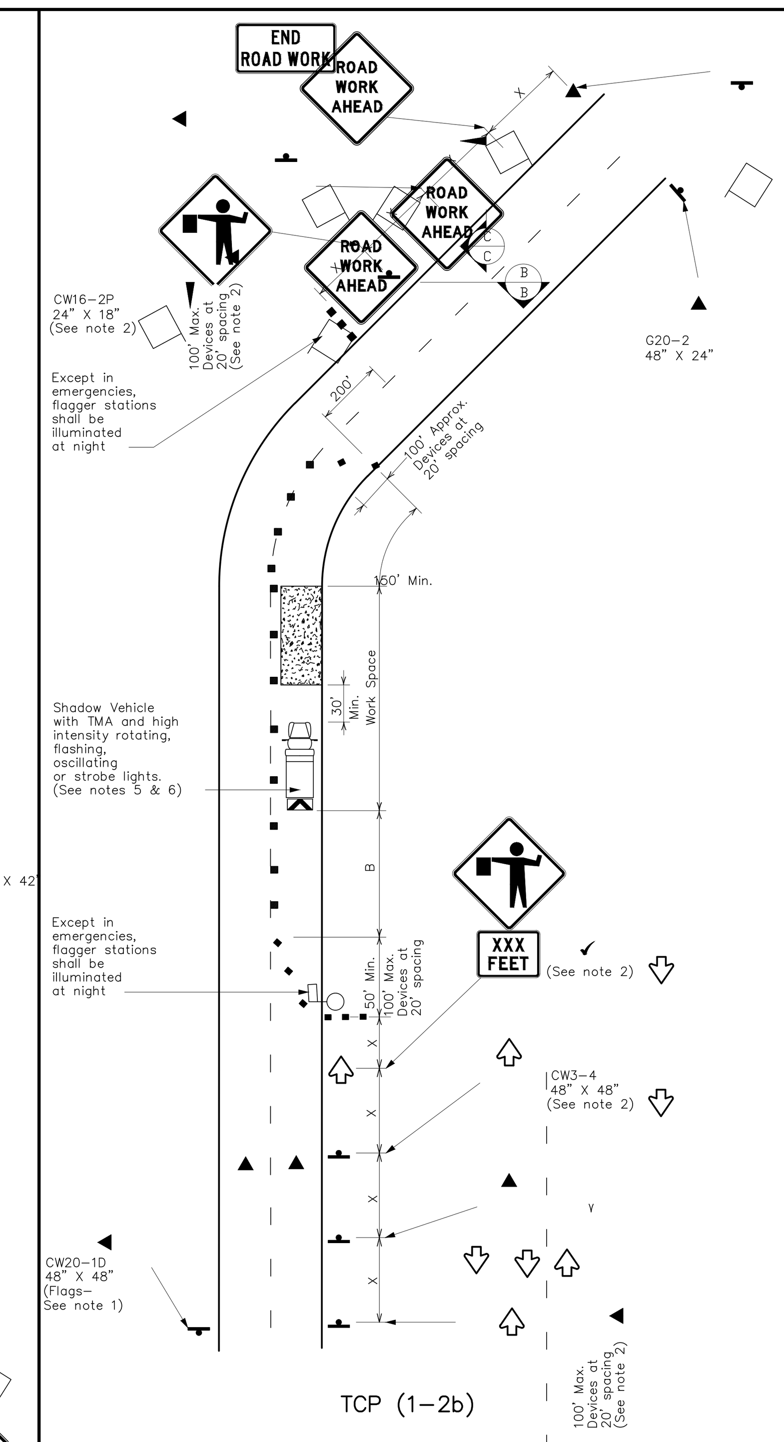

TCP (1-2b)

ONE LANE TWO-WAY
CONTROL WITH FLAGGERS

Posted Speed *	Formula	Minimum Desirable Taper Lengths ** 10' Offset	11' Offset	12' Offset	Suggested Maximum Spacing of Channelizing Devices On a Taper	On a Tangent	Minimum Sign Spacing "X" Distance	Suggested Longitudinal Buffer Space "B"	Stopping Sight Distance
30	$L=\frac{WS^2}{60}$	150'	165'	180'	30'	60'	120'	90'	200'
35		205'	225'	245'	35'	70'	160'	120'	250'
40		265'	295'	320'	40'	80'	240'	155'	305'
45	L=WS	450'	495'	540'	45'	90'	320'	195'	360'
50		500'	550'	600'	50'	100'	400'	240'	425'
55		550'	605'	660'	55'	110'	500'	295'	495'
60		600'	660'	720'	60'	120'	600'	350'	570'
65		650'	715'	780'	65'	130'	700'	410'	645'
70		700'	770'	840'	70'	140'	800'	475'	730'
75		750'	825'	900'	75'	150'	900'	540'	820'

* Conventional Roads Only
** Taper lengths have been rounded off.
L=Length of Taper(FT) W=Width of Offset(FT) S=Posted Speed(MPH)

TYPICAL USAGE

MOBILE	SHORT DURATION	SHORT TERM STATIONARY	INTERMEDIATE TERM STATIONARY	LONG TERM STATIONARY
		✓		

GENERAL NOTES
1. Flags attached to signs where shown are REQUIRED.
2. All traffic control devices illustrated are REQUIRED, except those denoted with the triangle symbol may be omitted when stated elsewhere in the plans, or for routine maintenance work, when approved by the Engineer.
3. The CW3-4 "BE PREPARED TO STOP" sign may be installed after the CW20-4D "ONE LANE ROAD AHEAD" sign, but proper sign spacing shall be maintained.
4. Sign spacing may be increased or an additional CW20-1D "ROAD WORK AHEAD" sign may be used if advance warning ahead of the flagger or R1-2 "YIELD" sign is less than 1500 feet.
5. A Shadow Vehicle with a TMA should be used anytime it can be positioned 30 to 100 feet in advance of the area of crew exposure without adversely affecting the performance or quality of the work. If workers are no longer present but road or work conditions require the traffic control to remain in place, Type 3 Barricades or other channelizing devices may be substituted for the Shadow Vehicle and TMA.
6. Additional Shadow Vehicles with TMAs may be positioned off the paved surface, next to those shown in order to protect wider work spaces.

TCP (1-2a)
7. R1-2 "YIELD" sign traffic control may be used on projects with approaches that have adequate sight distance. For projects in urban areas, work spaces should be no longer than one half city block. In rural areas on roadways with less than 2000 ADT, work spaces should be no longer than 400 feet.
8. R1-2 "YIELD" sign with R1-2aP "TO ONCOMING TRAFFIC" plaque shall be placed on a support at a 7 foot minimum mounting height.

TCP (1-2b)
9. Flaggers should use two-way radios or other methods of communication to control traffic.
10. Length of work space should be based on the ability of flaggers to communicate.
11. If the work space is located near a horizontal or vertical curve, the buffer distances should be increased in order to maintain adequate stopping sight distance to the flagger and a queue of stopped vehicles (see table above).
12. Channelizing devices on the center-line may be omitted when a pilot car is leading traffic and approved by the Engineer.
13. Flaggers should use 24" STOP/SLOW paddles to control traffic. Flags should be limited to emergency situations.

DISCLAIMER: The use of this standard is governed by the "Texas Engineering Practice Act". No warranty of any kind is made by TxDOT for any purpose whatsoever. TxDOT assumes no responsibility for the conversion of this standard to other formats or for incorrect results or damages resulting from its use.

DATE:
FILE:

Texas Department of Transportation — Traffic Operations Division Standard

TRAFFIC CONTROL PLAN ONE-LANE TWO-WAY TRAFFIC CONTROL

TCP(1-2)-18

FILE: tcp1-2-18.dgn | DN: | CK: | DW: | CK:
©TxDOT December 1985 | CONT | SECT | JOB | HIGHWAY
REVISIONS 4-90 4-98 2-94 2-12 1-97 2-18 | DIST | COUNTY | SHEET NO.
152

REV	DESCRIPTION	DATE	APR

DESIGNED BY: DAZ
REVIEWED BY: TMH
DRAWN BY: DAZ

BGE
BGE, INC.
1701 DIRECTORS BOULEVARD, SUITE 1000
AUSTIN, TX 78744
TBPE Registration No. F-1046
TEL: 512-879-0400 www.browngay.com

COTTONWOOD CREEK, PHASE II
HUTTO, TEXAS

TXDOT DETAILS (2 OF 2)

SUBMITTAL DATE: 03-15-2021

STATE OF TEXAS — TIMOTHY M. HOLLAND — 94848 — LICENSED PROFESSIONAL ENGINEER — 07/08/2021

SHEET
54 OF 54

G:\TXC\Projects\Lennar\8390-00-Cottonwood_PH2\LD\01_CADD\01_Shts\C-SP-DETL-PH-2.dwg Layout: TxDOT DETAILS (2 OF 2) Plotted: 7/7/2021 4:57:12 PM

Record Drawing

5/6/2022

RE: Cottonwood Creek Phase 2 Paving, Drainage, Water & Wastewater Improvements
City of Hutto
Williamson County
Contractor: JL Gray

Engineer's Concurrence Letter

To Whom It May Concern:

Please find this letter as our formal engineering concurrence for the above-referenced project. On May 6, 2022, I the undersigned professional engineer, made a final visual inspection of the above referenced project. This inspection represented the culmination of multiple site visits conducted by BGE, Inc. under the supervision of Josh Janysek, singly and several joint site visits conducted with City of Hutto Site Inspectors accompanied by Contractor personnel. The conclusion drawn from this final inspection and those site visits conducted during construction is that the Cottonwood Creek Phase 2 Paving, Drainage, Water & Wastewater Improvements project has been constructed in general compliance with the approved plans, specifications and requirements of the associated regulatory permits with insignificant deviation.

Revegetation of areas disturbed in this construction project remain in progress with appropriate erosion controls in place to minimize erosive potential during the grow-in period.

Sincerely,
BGE, Inc.

5/2/2022

STATE OF TEXAS
JOSHUA K. JANYSEK
134412
LICENSED
PROFESSIONAL ENGINEER

Josh Janysek, P.E.
Project Manager – Construction

cc: Todd Meaker, City of Hutto
Chase Kohlhoff, Lennar
Grant Fischer, JL Gray

May 5, 2022

Blaze Buccanero
BGE
1701 Directors Blvd, Suite 1000
Austin, TX 78744

Re: TAS Inspection - Cottonwood Creek Phase 2

Dear Blaze:

This report presents the findings of the on-site inspection for the Cottonwood Creek Phase 2 Project in Hutto, Texas for compliance with the Texas Accessibility Standards. This report is limited to inspecting the elements for compliance with the applicable technical standards and not scoping. An inspection of the site was conducted on May 5, 2022, which included the review of pedestrian sidewalks, curb ramps and associated crosswalks within the subdivision

All of the pedestrian elements were found to be in compliance with the Texas Accessibility Standards. The scope of work is limited to the inspection of the elements and excludes project registration with TDLR and a formal plan review of the design documents.

Feel free to contact me at (512) 410-7059 or at arturo@alturalp.com with any questions.

Sincerely,

Arturo Pinero, RAS #1551

Altura Solutions, LLC
3616 Far West Blvd., Ste. 117-288, Austin, TX 78731

(512) 410-7059
arturo@alturalp.com

IMPORTANT NOTICE
STATE OF TEXAS
COMPLAINT PROCEDURES

1. IMPORTANT NOTICE

To obtain information or make a complaint:

2. You may contact your agent.

3. You may call **Westfield Insurance Company, Westfield National Insurance Company, and/or Ohio Farmers Insurance Company's** toll-free telephone number for information or to make a complaint at:

1-800-243-0210

4. You may also write to **Westfield Insurance Company, Westfield National Insurance Company, and/or Ohio Farmers Insurance Company** at:

Attn: Bond Claims
One Park Circle
P O Box 5001
Westfield Center, OH 44251-5001
Fax #330-887-0840

5. You may contact the Texas Department of Insurance to obtain information on companies, coverages, rights or complaints at:

1-800-252-3439

6. You may write to the Texas Department of Insurance, Consumer Protection Section (MC 111-1A):

P.O. Box 149091
Austin, TX 78714-9091
Fax: (512) 490-1007
Web: www.tdi.texas.gov
E-mail: ConsumerProtection@tdi.texas.gov

7. **PREMIUM OR CLAIM DISPUTES:**
Should you have a dispute concerning your premium or about a claim, you should contact the agent, Westfield Insurance Company, Westfield National Insurance Company, or Ohio Farmers Insurance Company first. If the dispute is not resolved, you may contact the Texas Department of Insurance.

8. **ATTACH THIS NOTICE TO YOUR POLICY:**
This notice is for information only and does not become a part or condition of the attached document.

AVISO IMPORTANTE

Para obtener informacion o para someter una queja:

Puede comunicarse con su (title) al (telephone number).

Usted puede llamar al numero de telefono gratis de **Westfield Insurance Company, Westfield National Insurance Company, and/or Ohio Farmers Insurance Company's** para informacion o para someter una queja al:

1-800-243-0210

Usted tambien puede escribir a **Westfield Insurance Company, Westfield National Insurance Company, and/or Ohio Farmers Insurance Company:**

Attn: Bond Claims
One Park Circle
P O Box 5001
Westfield Center, OH 44251-5001
Fax #330-887-0840

Puede comunicarse con el Departamento de Sequros de Texas para obtener informacion acerca de companies, coberturas, derechos o quejas al:

1-800-252-3439

Puede escribir al Departamento de Seguros de Texas, Consumer Protection Section (MC 111-1A):

P.O. Box 149091
Austin, TX 78714-9091
Fax: (512) 490-1007
Web: www.tdi.texas.gov
E-mail: ConsumerProtection@tdi.texas.gov

DISPUTAS SOBRE PRIMAS O RECLAMOS:
Si tiene una disputa concerniente a su prima o a un reclamo, debe comunicarse con el agente, Westfield Insurance Company, Westfield National Insurance Company, o Ohio Farmers Insurance Company primero. Si no se resuelve la disputa, puede entonces comunicarse con el departamento (TDI).

UNA ESTE AVISO A SU POLIZA: Este aviso es solo para proposito de informacion y no se convierte en parte o condicion del documento adjunto.

BD5430 (06-15)

MAINTENANCE BOND

Bond No.: **219205W**

KNOW ALL PERSONS BY THESE PRESENTS, that we, JL Gray Construction, Inc., as Principal and Westfield Insurance Company, a corporation organized and doing business under and by virtue of the laws of the State of Ohio and duly licensed to conduct surety business in the State of Texas, as Surety, are held and firmly bound unto City of Hutto as Obligee, in the sum of Two Million Three Hundred Forty-two Thousand Seven Hundred Seventy-two And No/100 ($2,342,772.00) Dollars, for which payment, will and truly to be made, we bind ourselves, our heirs, executors and successors, jointly and severally firmly by these presents.

THE CONDITIONS OF THE OBLIGATION IS SUCH THAT:

WHEREAS, the above named Principal entered into an agreement or agreements with said Obligee(s) to: Cottonwood Creek Phase II

WHEREAS, said agreement provided that Principal shall guarantee replacement and repair of improvements as described therein for a period of 2 year(s) following final acceptance of said improvements: Cottonwood Creek Phase II - Paving, Drainage, Water, and Wastewater Improvements.

NOW THEREFORE, if the above Principal shall indemnify the Obligee for all loss that Obligee may sustain by reason of any defective materials or workmanship which become apparent during the period of 2 year (s) from and after acceptance of said improvements by Obligee, then this obligation shall be void; otherwise to remain in full force and effect.

IN WITNESS WHEREOF, the seal and signature of said Principal is hereto affixed and the corporate seal and the name of the said Surety is hereto affixed and attested by its duly authorized Attorney-in-Fact.

This 4th day of April, 2022.

JL Gray Construction, Inc.
Principal

By: _____

Westfield Insurance Company
Surety

Seal

By: _____
Jack Nottingham, Attorney-in-fact

Local Recording Agency:
K & S Insurance
P O Box 277
Rockwall, TX 75087

General
Power
of Attorney

CERTIFIED COPY

POWER NO. 4220012 14

Westfield Insurance Co.
Westfield National Insurance Co.
Ohio Farmers Insurance Co.

Westfield Center, Ohio

Know All Men by These Presents, That WESTFIELD INSURANCE COMPANY, WESTFIELD NATIONAL INSURANCE COMPANY and OHIO FARMERS INSURANCE COMPANY, corporations, hereinafter referred to individually as a "Company" and collectively as "Companies," duly organized and existing under the laws of the State of Ohio, and having its principal office in Westfield Center, Medina County, Ohio, do by these presents make, constitute and appoint
TONY FIERRO, JOHNNY MOSS, JAY JORDAN, MISTIE BECK, JEREMY BARNETT, JADE PORTER, ROBERT G. KANUTH, JARRETT WILLSON, JACK NOTTINGHAM, JOINTLY OR SEVERALLY

of **ROCKWALL** and State of **TX** its true and lawful Attorney(s)-in-Fact, with full power and authority hereby conferred in its name, place and stead, to execute, acknowledge and deliver **any and all bonds, recognizances, undertakings, or other instruments or contracts of suretyship- -.**

LIMITATION: THIS POWER OF ATTORNEY CANNOT BE USED TO EXECUTE NOTE GUARANTEE, MORTGAGE DEFICIENCY, MORTGAGE GUARANTEE, OR BANK DEPOSITORY BONDS.
and to bind any of the Companies thereby as fully and to the same extent as if such bonds were signed by the President, sealed with the corporate seal of the applicable Company and duly attested by its Secretary, hereby ratifying and confirming all that the said Attorney(s)-in-Fact may do in the premises. Said appointment is made under and by authority of the following resolution adopted by the Board of Directors of each of the WESTFIELD INSURANCE COMPANY, WESTFIELD NATIONAL INSURANCE COMPANY and OHIO FARMERS INSURANCE COMPANY:

"Be It Resolved, that the President, any Senior Executive, any Secretary or any Fidelity & Surety Operations Executive or other Executive shall be and is hereby vested with full power and authority to appoint any one or more suitable persons as Attorney(s)-in-Fact to represent and act for and on behalf of the Company subject to the following provisions:

The Attorney-in-Fact, may be given full power and authority for and in the name of and on behalf of the Company, to execute, acknowledge and deliver, any and all bonds, recognizances, contracts, agreements of indemnity and other conditional or obligatory undertakings and any and all notices and documents canceling or terminating the Company's liability thereunder, and any such instruments so executed by any such Attorney-in-Fact shall be as binding upon the Company as if signed by the President and sealed and attested by the Corporate Secretary."

"Be it Further Resolved, that the signature of any such designated person and the seal of the Company heretofore or hereafter affixed to any power of attorney or any certificate relating thereto by facsimile, and any power of attorney or certificate bearing facsimile signatures or facsimile seal shall be valid and binding upon the Company with respect to any bond or undertaking to which it is attached." (Each adopted at a meeting held on February 8, 2000).

In Witness Whereof, WESTFIELD INSURANCE COMPANY, WESTFIELD NATIONAL INSURANCE COMPANY and OHIO FARMERS INSURANCE COMPANY have caused these presents to be signed by their **National Surety Leader** and **Senior Executive** and their corporate seals to be hereto affixed this **02nd** day of **JANUARY** A.D., **2020** .

Corporate
Seals
Affixed

WESTFIELD INSURANCE COMPANY
WESTFIELD NATIONAL INSURANCE COMPANY
OHIO FARMERS INSURANCE COMPANY

State of Ohio
County of Medina ss.:

By: **Gary W. Stumper,** *National Surety Leader* and *Senior Executive*

On this **02nd** day of **JANUARY** A.D., **2020** , before me personally came **Gary W. Stumper** to me known, who, being by me duly sworn, did depose and say, that he resides in **Hartford, CT;** that he is **National Surety Leader** and **Senior Executive** of WESTFIELD INSURANCE COMPANY, WESTFIELD NATIONAL INSURANCE COMPANY and OHIO FARMERS INSURANCE COMPANY, the companies described in and which executed the above instrument; that he knows the seals of said Companies; that the seals affixed to said instrument are such corporate seals; that they were so affixed by order of the Boards of Directors of said Companies; and that he signed his name thereto by like order.

Notarial
Seal
Affixed

State of Ohio
County of Medina ss.:

David A. Kotnik, Attorney at Law, *Notary Public*
My Commission Does Not Expire (Sec. 147.03 Ohio Revised Code)

I, **Frank A. Carrino,** Secretary of WESTFIELD INSURANCE COMPANY, WESTFIELD NATIONAL INSURANCE COMPANY and OHIO FARMERS INSURANCE COMPANY, do hereby certify that the above and foregoing is a true and correct copy of a Power of Attorney, executed by said Companies, which is still in full force and effect; and furthermore, the resolutions of the Boards of Directors, set out in the Power of Attorney are in full force and effect.

In Witness Whereof, I have hereunto set my hand and affixed the seals of said Companies at Westfield Center, Ohio, this 4th day of April A.D., 2022 .

Secretary

Frank A. Carrino, *Secretary*

BPOAC2 (combined) (06-02)

Contractor: JL Gray Construction
Engineer: BGE, INC

COST AND QUANTITIES

COTTONWOOD CREEK PHASE 2 IMPROVEMENTS

HUTTO, TEXAS

SECTION 1 - WATER IMPROVEMENTS					
ITEM NO.	DESCRIPTION	QUANTITY	UNIT	UNIT PRICE	AMOUNT
1	8-INCH C-900, DR-14 POTABLE WATERLINE INCLUDING FITTINGS AND APPURTENANCES, ALL DEPTHS, PER LINEAR FOOT, COMPLETE AND IN PLACE (CIP)	4,900	LF	$ 39.00	$ 191,100.00
2	SINGLE WATER SERVICE, PER EACH, CIP	17	EA	$ 1,435.00	$ 24,395.00
3	DOUBLE WATER SERVICE, PER EACH, CIP	41	EA	$ 1,650.00	$ 67,650.00
4	FIRE HYDRANT ASSEMBLY, PER EACH, CIP	9	EA	$ 5,000.00	$ 45,000.00
5	8-INCH GATE VALVE, PER EACH, CIP	13	EA	$ 1,745.00	$ 22,685.00
6	8-INCH CONNECT TO EXISTING, PER EACH, CIP	4	EA	$ 1,015.00	$ 4,060.00
7	AUTOMATIC FLUSH VALVE, PER EACH, CIP	1	EA	$ 5,280.00	$ 5,280.00
8	TRENCH SAFETY SYSTEMS, ALL DEPTHS, PER LINEAR FOOT, CIP	4,900	LF	$ 1.00	$ 4,900.00
	SUBTOTAL WATER IMPROVEMENTS				$ 365,070.00

SECTION 2 - WASTEWATER IMPROVEMENTS					
ITEM NO.	DESCRIPTION	ESTIMATED QUANTITY	UNIT	UNIT PRICE	AMOUNT
1	8-INCH ASTM D3034 SDR-26 WASTEWATER PIPE, ALL DEPTHS, PER LINEAR FOOT, CIP	3,565	LF	$ 35.00	$ 124,775.00
2	STANDARD MANHOLE FOR WASTEWATER, 4-FOOT DIA. PER EACH, CIP	15	EA	$ 4,125.00	$ 61,875.00
3	DROP MANHOLE FOR WASTEWATER, 4-FOOT DIA. PER EACH, CIP	1	EA	$ 5,135.00	$ 5,135.00
4	EXTRA DEPTH, 4-FOOT DIA., PER VERTICAL LINEAR FOOT, CIP	54	VF	$ 385.00	$ 20,790.00
5	SINGLE WASTEWATER SERVICE PER EACH, CIP	23	EA	$ 1,720.00	$ 39,560.00
6	DOUBLE WASTEWATER SERVICE PER EACH, CIP	39	EA	$ 1,890.00	$ 73,710.00
7	CONNECT TO EXISTING, PER EACH, CIP	1	EA	$ 730.00	$ 730.00
8	TRENCH SAFETY SYSTEMS, ALL DEPTHS, PER LINEAR FOOT, CIP	3,565	LF	$ 2.25	$ 8,021.25
	SUBTOTAL WASTEWATER IMPROVEMENTS				$ 334,596.25

SECTION 3 - DRAINAGE IMPROVEMENTS					
ITEM NO.	DESCRIPTION	ESTIMATED QUANTITY	UNIT	UNIT PRICE	AMOUNT
1	18-INCH RCP, CLASS III (ALL DEPTHS) PER LINEAR FOOT, CIP	1,269	LF	$ 42.00	$ 53,298.00
2	24-INCH RCP, CLASS III (ALL DEPTHS) PER LINEAR FOOT, CIP	1,328	LF	$ 54.00	$ 71,712.00
3	30-INCH RCP, CLASS III (ALL DEPTHS) PER LINEAR FOOT, CIP	664	LF	$ 71.00	$ 47,144.00
4	36-INCH RCP, CLASS III (ALL DEPTHS) PER LINEAR FOOT, CIP	100	LF	$ 97.00	$ 9,700.00
5	42-INCH RCP, CLASS III (ALL DEPTHS) PER LINEAR FOOT, CIP	276	LF	$ 131.00	$ 36,156.00
6	4'X3' RCB, CLASS III (ALL DEPTHS) PER LINEAR FOOT, CIP	203	LF	$ 208.00	$ 42,224.00
7	10-FOOT CURB INLET PER EACH, CIP	25	EA	$ 4,315.00	$ 107,875.00
8	15-FOOT CURB INLET PER EACH, CIP	1	EA	$ 6,675.00	$ 6,675.00
9	STANDARD MANHOLE FOR STORM, 4-FOOT DIA. PER EACH, CIP	3	EA	$ 3,130.00	$ 9,390.00
10	4'X4' JUNCTION BOX, PER EACH, CIP	1	EA	$ 3,070.00	$ 3,070.00
11	5'X5' JUNCTION BOX, PER EACH, CIP	6	EA	$ 3,600.00	$ 21,600.00
12	6'X6' JUNCTION BOX, PER EACH, CIP	3	EA	$ 4,690.00	$ 14,070.00
13	CONNECT TO EXISTING RCP	4	LF	$ 495.00	$ 1,980.00
14	TRENCH SAFETY SYSTEMS, ALL DEPTHS, PER LINEAR FOOT, CIP	3,840	LF	$ 1.00	$ 3,840.00
	SUBTOTAL DRAINAGE IMPROVEMENTS				$ 428,734.00

SECTION 4 - PAVING IMPROVEMENTS					
ITEM NO.	DESCRIPTION	ESTIMATED QUANTITY	UNIT	UNIT PRICE	AMOUNT
1	SUBGRADE PREPARATION, PER SQUARE YARD, CIP	20,045	SY	$ 4.00	$ 80,180.00
2	8-INCH LIME TREATED SUBGRADE, PER SQUARE YARD, CIP	20,045	SY	$ 7.25	$ 145,326.25
3	HMAC, 2-INCH THICKNESS, TYPE D PER SQUARE YARD, CIP	15,093	SY	$ 12.00	$ 181,116.00
4	CRUSHED LIMESTONE BASE, 9-INCH THICKNESS, PER SQUARE YARD, CIP	17,466	SY	$ 8.50	$ 148,461.00
5	CRUSHED LIMESTONE BASE, 14-INCH THICKNESS, PER SQUARE YARD, CIP	2,579	SY	$ 13.25	$ 34,171.75
6	STREET END BARRICADE, PER EACH, CIP	2	LS	$ 1,135.00	$ 2,270.00
7	MACHINE LAID P.C. CONCRETE CURB AND GUTTER, PER LINEAR FOOT, CIP	8,930	LF	$ 15.50	$ 138,415.00
8	P.C. CONCRETE SIDEWALK, 5-FEET WIDE, 4-INCH THICKNESS, PER SQUARE FOOT, CIP	1,444	LF	$ 33.75	$ 48,735.00
9	P.C. CONCRETE SIDEWALK CURB RAMP WITH PAVERS, PER EACH, CIP	34	EA	$ 1,285.00	$ 43,690.00
10	SIGNING AND STRIPING, PER LUMP SUM, CIP	1	LS	$ 21,185.00	$ 21,185.00
11	REMOVE STREET END BARRICADE, PER LUMP SUM, CIP	3	EA	$ 115.00	$ 345.00
12	CONCRETE VALLEY GUTTERS, PER EACH, CIP	4	EA	$ 6,000.00	$ 24,000.00
	SUBTOTAL PAVING IMPROVEMENTS				$ 867,895.00

SECTION 5 - EROSION AND SEDIMENTATION CONTROLS					
ITEM NO.	DESCRIPTION	ESTIMATED QUANTITY	UNIT	UNIT PRICE	AMOUNT
1	SILT FENCE FOR EROSION CONTROL, PER LINEAR FOOT, CIP	10,070	LF	$ 2.50	$ 25,175.00
2	INLET PROTECTION, PER EACH, CIP	22	EA	$ 155.00	$ 3,410.00
3	STABILIZED CONSTRUCTION ENTRANCE, PER EACH, CIP	1	EA	$ 1,135.00	$ 1,135.00
4	REVEGETATION, PER SQUARE YARD, CIP	95,119	SY	$ 0.50	$ 47,559.50
	SUBTOTAL EROSION AND SEDIMENTATION CONTROLS				$ 77,279.50

COTTONWOOD CREEK PHASE 2 IMPROVEMENTS

HUTTO, TEXAS

SECTION 6 - CLEARING AND EXCAVATION IMPROVEMENTS							
ITEM NO.	**DESCRIPTION**	**ESTIMATED QUANTITY**	**UNIT**	**UNIT PRICE**		**AMOUNT**	
1	CLEARING AND GRUBBING, PER ACRE, CIP	23	AC	$	350.00	$	8,050.00
2	EXCAVATION, PER CUBIC YARD, CIP	27,867	CY	$	2.75	$	76,634.25
3	EMBANKMENT, PER CUBIC YARD, CIP	33,319	CY	$	2.00	$	66,638.00
4	MOBILIZATION, PER LUMP SUM, CIP	1	LS	$	117,875.00	$	117,875.00
SUBTOTAL CLEARING & EXCAVATION IMPROVEMENTS						$	269,197.25

5/1/2022

SECTION 1 - WATER IMPROVEMENTS	$	365,070.00
SECTION 2 - WASTEWATER IMPROVEMENTS	$	334,596.25
SECTION 3 - DRAINAGE IMPROVEMENTS	$	428,734.00
SECTION 4 - PAVING IMPROVEMENTS	$	867,895.00
SECTION 5 - EROSION AND SEDIMENTATION CONTROLS	$	77,279.50
SECTION 6 - CLEARING AND EXCAVATION IMPROVEMENTS	$	269,197.25
COTTONWOOD PHASE 2 TOTAL COST	$	2,342,772.00
MAINTENANCE BOND @ 100% FOR 2 YEARS	$	2,342,772.00

AGENDA ITEM REPORT
8.5.

To:	City Council
Subject:	Consideration and possible action on Resolution No. R-2022-057 suspending the June 17, 2022 effective date of Oncor Electric Delivery Company's requested rate change to permit the City time to study the request and to establish reasonable rates; approving cooperation with the Steering Committee of Cities served by Oncor to hire legal and consulting services and to negotiate with the Company and direct any necessary litigation and appeals. (Legal)
Meeting:	Thursday, June 2, 2022
Department:	Legal /
Staff Contact:	Cristian Rosas-Grillet

BACKGROUND INFORMATION:

ACTION MUST BE TAKEN TO SUSPEND THE EFFECTIVE DATE ON OR BEFORE JUNE 17, 2022

PURPOSE
Oncor Electric Delivery Company ("Oncor" or "the Company") filed an application on or about May 13, 2022 with cities retaining original jurisdiction seeking to increase system-wide transmission and distribution rates by about $251 million or approximately 4.5% over present revenues. The Company asks the City to approve an 11.2% increase in residential rates and a 1.6% increase in street lighting rates. If approved, a residential customer using 1,300 kWh per month would see a bill increase of about $6.02 per month.

The resolution suspends the June 17, 2022 effective date of the Company's rate increase for the maximum period permitted by law to allow the City, working in conjunction with the Steering Committee of Cities Served by Oncor, to evaluate the filing, determine whether the filing complies with law, and if lawful, to determine what further strategy, including settlement, to pursue.

The law provides that a rate request made by an electric utility cannot become effective until at least 35 days following the filing of the application to change rates. The law permits the City to suspend the rate change for 90 days after the date the rate change would otherwise be effective. If the City fails to take some action regarding the filing before the effective date, Oncor's rate request is deemed administratively approved.

The City of Hutto is a member of a 169-city coalition known as the Steering Committee of Cities Served by Oncor ("Steering Committee"). The Steering Committee has been in existence since the late 1980s. It took on a formal structure in the early 1990s when cities served by the former TXU

gave up their statutory right to rate case expense reimbursement in exchange for higher franchise fee payments. Empowered by city resolutions and funded by per capita assessments, the Steering Committee has been the primary public interest advocate before the Public Utility Commission, the Courts, and the Legislature on electric utility regulation matters for the last 30 years.

Although Oncor has increased rates many times over the past few years, this is the first comprehensive base rate case for the Company since March 2017.

SUMMARY OF REQUEST:

STAFF REVIEW:

FINANCIAL IMPACT:

POLICY IMPLICATIONS:

ATTACHMENTS:

RESOLUTION NO. _____

RESOLUTION OF THE CITY OF HUTTO SUSPENDING THE JUNE 17, 2022 EFFECTIVE DATE OF ONCOR ELECTRIC DELIVERY COMPANY'S REQUESTED RATE CHANGE TO PERMIT THE CITY TIME TO STUDY THE REQUEST AND TO ESTABLISH REASONABLE RATES; APPROVING COOPERATION WITH THE STEERING COMMITTEE OF CITIES SERVED BY ONCOR TO HIRE LEGAL AND CONSULTING SERVICES AND TO NEGOTIATE WITH THE COMPANY AND DIRECT ANY NECESSARY LITIGATION AND APPEALS; FINDING THAT THE MEETING AT WHICH THIS RESOLUTION IS PASSED IS OPEN TO THE PUBLIC AS REQUIRED BY LAW; REQUIRING NOTICE OF THIS RESOLUTION TO THE COMPANY AND LEGAL COUNSEL FOR THE STEERING COMMITTEE

WHEREAS, on or about May 13, 2022, Oncor Electric Delivery Company (Oncor), pursuant to PURA §§ 33.001 and 36.001 filed with the City of Hutto a Statement of Intent to increase electric transmission and distribution rates in all municipalities exercising original jurisdiction within its service area effective June 17, 2022; and

WHEREAS, the City of Hutto is a member of the Steering Committee of Cities Served by Oncor ("Steering Committee") and will cooperate with the 169 similarly situated city members and other city participants in conducting a review of the Company's application and to hire and direct legal counsel and consultants and to prepare a common response and to negotiate with the Company prior to getting reasonable rates and direct any necessary litigation; and

WHEREAS, PURA § 36.108 grants local regulatory authorities the right to suspend the effective date of proposed rate changes for ninety (90) days after the date the rate change would otherwise be effective; and

WHEREAS, PURA § 33.023 provides that costs incurred by Cities in ratemaking proceedings are to be reimbursed by the regulated utility.

THEREFORE, BE IT RESOLVED BY THE CITY COUNCIL OF THE CITY OF HUTTO, TEXAS:

1. That the June 17, 2022 effective date of the rate request submitted by Oncor on or about May 13, 2022, be suspended for the maximum period allowed by law to permit adequate time to review the proposed changes and to establish reasonable rates.

2. As indicated in the City's resolution approving membership in the Steering Committee, the Executive Committee of Steering Committee is authorized to hire and direct legal counsel and consultants, negotiate with the Company, make recommendations regarding reasonable rates, and to intervene and direct any necessary administrative proceedings or court litigation associated with an appeal of a rate ordinance and the rate case filed with the City or Public Utility Commission.

3. That the City's reasonable rate case expenses shall be reimbursed by Oncor.

4. That it is hereby officially found and determined that the meeting at which this Resolution is passed is open to the public as required by law and the public notice of the time, place, and purpose of said meeting was given as required.

5. A copy of this Resolution shall be sent to Oncor, Care of Howard V. Fisher, Oncor Electric Delivery Company LLC, 1616 Woodall Rodgers Freeway, Dallas, Texas 75202 and to Thomas Brocato, Counsel to the Steering Committee, at Lloyd Gosselink Rochelle & Townsend, P.C., P.O. Box 1725, Austin, Texas 78767-1725.

PASSED AND APPROVED this the _____ day of _____, 2022.

_____
Mike Snyder, Mayor, City of Hutto

ATTEST:

_____
Angela Walton, City Secretary

APPROVED AS TO FORM:

By:_____
Cristian Rosas-Grillet, Assistant City Attorney

AGENDA ITEM REPORT
8.6.

To:	City Council
Subject:	Consideration and possible action on Resolution No. R-2022-054 accepting the infrastructure improvements for the subdivision known as Wilco Ranch Phase 3 Section 2. (Matt Wojnowski)
Meeting:	Thursday, June 2, 2022
Department:	Public Works /
Staff Contact:	Matt Wojnowski

BACKGROUND INFORMATION:

The City staff reviewed the close out documents and inspected the public infrastructure and deemed it to be complete. The infrastructure includes pavement, sidewalks and utilities.

SUMMARY OF REQUEST:

Wilco Ranch Phase 3 Section 2 subdivision is located east of CR 119 and north of Limmer Loop. The total construction cost of the subdivision is approximately $1.3M that consists of streets, sidewalks, wastewater, storm sewer and drainage. Water improvements in this subdivision belong to Jonah SUD. The subdivision consists of 68 lots on approximately 12 acres. The contractor used for this project is Joe Bland Construction, LP and the Engineer that designed the public infrastructure is BGE, Inc. The City staff conducted a final walk-thru on 5/20/22 for inspection and reviewed the final paperwork.

STAFF REVIEW:

FINANCIAL IMPACT:

No immediate financial impact is anticipated.

POLICY IMPLICATIONS:

ATTACHMENTS:

RESOLUTION NO. R-2022-054

A RESOLUTION ACCEPTING THE INFRASTRUCTURE IMPROVEMENTS FOR THE SUBDIVISION KNOWN AS WILCO RANCH PHASE 3 SECTION 2 IN THE CITY OF HUTTO, WILLIAMSON COUNTY, TEXAS; PROVIDING A SEVERABILITY CLAUSE; AND PROVIDING AN EFFECTIVE DATE

WHEREAS, the City of Hutto ("City") has been notified by Ashton Austin Residential LLC (the "Developer") that the infrastructure improvements for the Wilco Ranch Phase 3 Section 2 Residential subdivision have been substantially completed and have submitted those improvements for acceptance by the City, and;

WHEREAS, a final inspection was conducted by the City's Construction and Public Works staff of all of the infrastructure improvements, including roads, drainage, sidewalks, ADA ramps, restoration, pond, and wastewater improvements in Wilco Ranch Phase 3 Section 2; and

WHEREAS, all items have been constructed according to engineering plans and City codes and standards; and

WHEREAS, the Developer submitted a maintenance bond to cover the material and workmanship for two years.

NOW, THEREFORE, BE IT RESOLVED BY THE CITY COUNCIL OF THE CITY OF HUTTO, TEXAS, THAT:

SECTION 1. The findings set forth in the recitals of this Resolution are hereby found to be true and correct and are hereby adopted as findings of the City Council and are incorporated into the body of this Resolution as if fully set forth herein.

SECTION 2. The City Council hereby accepts the infrastructure improvements for Wilco Ranch Phase 3 Section 2.

SECTION 3. The sections, paragraphs, sentences, phrases, clauses, and words of this Resolution are severable and if any phrase, clause, sentence, paragraph or section of this Resolution shall be declared invalid or unconstitutional by the valid and final judgment or decree of any court of competent jurisdiction, such invalidity or unconstitutionality shall not affect any of the remaining phrases, clauses, sentences, paragraphs, and sections of this Resolution, since the same would have been enacted by the City Council without the incorporation in this Resolution of any such unconstitutional or invalid phrase, clause, sentence, paragraph or section.

SECTION 4. This Resolution shall become effective and be in full force and effect from and after the date of passage and adoption by the City Council, and upon approval, thereof, as prescribed by law.

SECTION 5. The City Council hereby finds and declares that written notice of the date,

hour, place, and subject of the meeting at which this Resolution was adopted was posted and that such meeting was open to the public as required by law at all times during which this Resolution and the subject matter hereof were discussed, considered and formally acted upon, all as required by the Open Meetings Act, Chapter 551, Texas Government Code, as amended.

CONSIDERED and RESOLVED by the City Council of the City of Hutto on this the **2nd** day of **June, 2022.**

THE CITY OF HUTTO, TEXAS

_____
Mike Snyder, Mayor

ATTESTED:

_____
Angela Watson, City Secretary

APPROVED AS TO FORM:

_____
Cristian Rosas-Grillet
Assistant City Attorney

SureTec

SureTec Insurance Company

2103 CityWest Boulevard, Suite 1300
Houston, TX 77042
713-812-0800

Bond No. 4454038

MAINTENANCE BOND

KNOW ALL MEN BY THESE PRESENTS, that we Joe Bland Construction, LP as Principal, and SureTec Insurance Company, a corporation organized under the laws of the State of Texas, and duly authorized to do business in the State of Texas as Surety, are held and firmly bound unto City of Hutto as Obligee, in the penal sum of One Million Three Hundred Thirty Three Thousand Seven Hundred Sixty Six and 00/100's Dollars ($1,333,766.00) to which payment well and truly to be made we do bind ourselves, and each of our heirs, executors, administrators, successors and assigns jointly and severally, firmly by these presents.

WHEREAS, the said Principal has completed, and owner has inspected and accepted as being complete in accordance with applicable design documents (failing which, this bond shall become effective only upon such completion and inspection) that certain work (herein referred to as the "Work") described as: Wilco Ranch, Phase 3 Section 2 - Paving, Drainage, Water, Wastewater, Sidewalk and Ramp Improvements.

WHEREAS, said Obligee requires that the Principal furnish a bond conditioned to guarantee for the period of Two (2) year (s) after the acceptance of City Council of the Work against defects in workmanship and materials which are the responsibility of the Principal under the contract under which the Work was constructed, and which did not appear prior to the final completion of the Work.

NOW THEREFORE, THE CONDITIONS OF THIS OBLIGATION IS SUCH that, if the Principal shall indemnify the Obligee for all loss that the Obligee may sustain by reason of defective materials or workmanship which may first become apparent, and with respect to which written notice is delivered to Surety, before the expiration of the period of Two (2) year (s) from the acceptance of City Council, then this obligation shall be void, otherwise to remain in full force and effect.

This obligation does not cover normal wear and tear of materials, misuse or abuse by the Obligee or third parties, failure of Owner to perform owner-required maintenance, nor any defects known to Obligee prior to final completion of the Work nor any defects discovered or occurring after the expiration of the period set forth above.

Surety's liability on any performance bond previously executed in connection with the Work shall terminate automatically upon acceptance of this Bond and Surety's liability shall thereafter be determined exclusively in accordance with the terms of this Bond.

No right of action shall accrue hereunder to or for the benefit of any person or entity other the Obligee named herein, nor shall any suit be filed or action maintained on this bond more than twenty five (25) months after the date of the earliest timely notice of defect by Obligee to Surety.

SIGNED, SEALED AND DATED THIS 2nd day of May, 2022.

Joe Bland Construction, LP
Principal

By: _____ Joe Bland
President, Bland, Inc.
General Partner

SureTec Insurance Company

By: _____
Brad Ballew, Attorney-in-Fact

Maintenance Bond – No Performance Bond Furnished Rev. 1-1-06
Please see the attached Rider for important notices and coverage information

POA# 4221356

JOINT LIMITED POWER OF ATTORNEY

KNOW ALL MEN BY THESE PRESENTS: That SureTec Insurance Company, a Corporation duly organized and existing under the laws of the State of Texas and having its principal office in the County of Harris, Texas and Markel Insurance Company (the "Company"), a corporation duly organized and existing under the laws of the state of Illinois, and having its principal administrative office in Glen Allen, Virginia, does by these presents make, constitute and appoint:

David S. Ballew, Brad Ballew, Connie Davis, David Fernea

Their true and lawful agent(s) and attorney(s)-in-fact, each in their separate capacity if more than one is named above, to make, execute, seal and deliver for and on their own behalf, individually as a surety or jointly, as co-sureties, and as their act and deed any and all bonds and other undertaking in suretyship provided; however, that the penal sum of any one such instrument executed hereunder shall not exceed the sum of:

Fifty Million and 00/100 Dollars ($50,000,000.00)

This Power of Attorney is granted and is signed and sealed under and by the authority of the following Resolutions adopted by the Board of Directors of SureTec Insurance Company and Markel Insurance Company:

"RESOLVED, That the President, Senior Vice President, Vice President, Assistant Vice President, Secretary, Treasurer and each of them hereby is authorized to execute powers of attorney, and such authority can be executed by use of facsimile signature, which may be attested or acknowledged by any officer or attorney, of the company, qualifying the attorney or attorneys named in the given power of attorney, to execute in behalf of, and acknowledge as the act and deed of the SureTec Insurance Company and Markel Insurance Company, as the case may be, all bond undertakings and contracts of suretyship, and to affix the corporate seal thereto."

IN WITNESS WHEREOF, Markel Insurance Company and SureTec Insurance Company have caused their official seal to be hereunto affixed and these presents to be signed by their duly authorized officers on the 18th day of November, 2020.

SureTec Insurance Company

By: _____
Michael C. Keimig, President

Markel Insurance Company

By: _____
Robin Russo, Senior Vice President

Commonwealth of Virginia
County of Henrico SS:

On this 18th day of November, 2020 A. D., before me, a Notary Public of the Commonwealth of Virginia, in and for the County of Henrico, duly commissioned and qualified, came THE ABOVE OFFICERS OF THE COMPANIES, to me personally known to be the individuals and officers described in, who executed the preceding instrument, and they acknowledged the execution of same, and being by me duly sworn, disposed and said that they are the officers of the said companies aforesaid, and that the seals affixed to the proceeding instrument are the Corporate Seals of said Companies, and the said Corporate Seals and their signatures as officers were duly affixed and subscribed to the said instrument by the authority and direction of the said companies, and that Resolutions adopted by the Board of Directors of said Companies referred to in the preceding instrument is now in force.

IN TESTIMONY WHEREOF, I have hereunto set my hand, and affixed my Official Seal at the County of Henrico, the day and year first above written.

DONNA DONAVANT NOTARY PUBLIC MY COMMISSION NUMBER 7083968 COMMONWEALTH OF VIRGINIA

By: _____
Donna Donavant, Notary Public
My commission expires 1/31/2023

We, the undersigned Officers of SureTec Insurance Company and Markel Insurance Company do hereby certify that the original POWER OF ATTORNEY of which the foregoing is a full, true and correct copy is still in full force and effect and has not been revoked.

IN WITNESS WHEREOF, we have hereunto set our hands, and affixed the Seals of said Companies, on the 2nd day of May, 2022.

SureTec Insurance Company

By: _____
M. Brent Beaty, Assistant Secretary

Markel Insurance Company

By: _____
Richard R. Grinnan, Vice President and Secretary

Any Instrument Issued in excess of the penalty stated above is totally void and without any validity. **4221356**
For verification of the authority of this Power you may call (713)812-0800 on any business day between 8:30 AM and 5:00 PM CST.

SureTec Insurance Company

THIS BOND RIDER CONTAINS IMPORTANT COVERAGE INFORMATION

Statutory Complaint Notice/Filing of Claims

To obtain information or make a complaint: You may call the Surety's toll free telephone number for information or to make a complaint or file a claim at: 1-866-732-0099. You may also write to the Surety at:

SureTec Insurance Company
9737 Great Hills Trail, Suite 320
Austin, Tx 78759

You may contact the Texas Department of Insurance to obtain information on companies, coverage, rights or complaints at 1-800-252- 3439. You may write the Texas Department of Insurance at:

PO Box 149104
Austin, TX 78714-9104
Fax#: 512-490-1007
Web: http://www.tdi.state.tx.us
Email: ConsumerProtection@tdi.texas.gov

PREMIUM OR CLAIMS DISPUTES: Should you have a dispute concerning your premium or about a claim, you should contact the Surety first. If the dispute is not resolved, you may contact the Texas Department of Insurance.

May 17, 2022

City of Hutto
500 W. Live Oak Street
Hutto, TX 78634

RE: Wilco Ranch, Phase 3, Section 2 Concurrence Letter

Dear City of Hutto Staff,

On May 17, 2022, I, the undersigned Professional Engineer in the state of Texas, or my representative, made a final visual inspection of the Wilco Ranch, Phase 3, Section 2 construction project. This inspection represented the culmination of multiple site visits conducted by BGE, Inc., singly as well as joint site visit(s) conducted with City of Hutto staff accompanied by Contractor personnel. The conclusion drawn from this final inspection and those site visits conducted during construction is that the construction project has been constructed in general compliance with the approved plans, specifications, and requirements of the associated regulatory permits. I, therefore, recommend acceptance of this project by City of Hutto.

Revegetation of areas disturbed in this construction project remain in progress with appropriate erosion controls in place to minimize erosive potential during the grow-in period.

Sincerely,
BGE, Inc.

5/17/2022

STATE OF TEXAS
JOSHUA K. JANYSEK
134412
LICENSED
PROFESSIONAL ENGINEER

Josh Janysek, P.E.
Project Manager

cc: Todd Meaker, City of Hutto
Cody Bass, Ashton Woods
Andrew Batten, Joe Bland Construction

PROJECT CONSTRUCTION SUMMARY

PROJECT NAME: Wilco Ranch Phase 3 Section 2

FINAL ACCEPTANCE DATE: _____

INSPECTOR: Jeff Way

CONTRACTOR: Joe Bland Construction, LP

Maintained By:	
COH	Other
Boxes checked by COH	

CONSTRUCTION COSTS

STREET IMPROVEMENT COST: $617,427.25

SIDEWALK IMPROVEMENT COST: $14,464.00

SIDEWALK RAMP IMPROVEMENT COST: $29,600.00

BRIDGE IMPROVEMENT COST: N/A

POND(S) COST: $85,000

DRAINAGE IMPROVEMENT COST: $288,271.50

WATER IMPROVEMENT COST: N/A

WASTEWATER IMPROVEMENT COST: $254,366.00

RESTORATION .COST: $34,944.75

TOTAL IMPROVEMENT COST: $1,324,073.50

PREPARED BY (DESIGN ENGINEER): Josh Janysek

CHECKED BY (CITY INSPECTOR): _____

CONSTRUCTION SUMMARY FOR STREETS & SIDEWALKS

STREET PAVING							
STREET NAME	Address from	Address to	Pavement Design (Thickness) Asphalt / Base	Pavement Width (FT) (foc-foc)	L (FT)	PRIVATE	ETJ
BLACK BEAR DRIVE	701	751	2” / 16”	VARIES	942’	NO	NO
GRAY FOX LOOP	607	803	2” / 16”	30’	1542’	NO	NO

SIDEWALKS / SIDEWALK RAMPS						
STREET NAME	Address From	Address to	W (FT)	L (FT)	SIDES 1	CURB RAMP 2
BLACK BEAR DRIVE	701	751	5’	133’	N	4
BLACK BEAR DRIVE	609	801	5’	127’	S	4
GRAY FOX LOOP	609	801	5’	172’	N/E	8

1 – Designates location of existing sidewalk (E, W, S, N, SE, SW, NE, NW of designated street)
2 – Number of Ramps

CONSTRUCTION SUMMARY FOR BRIDGES

BRIDGES / BRIDGE CLASS CULVERTS / DRAINAGE CULVERTS ACROSS ROW								
STREET NAME AND ADDRESS OR LOCATION	FEATURE CROSSED 1	TYPE 2	DESCRIPTION 3	DECK		COST	PRIVATE	ETJ
				W (FT) 4	L (FT) 5			
BLACKBEAR DRIVE		C	2-18” SAFETY END TREATMENTS; 2-18” RCP	2’	75’	$10,525.00	NO	NO

1 – Feature Crossed: Creek name if major creek or branch, or roadway name if overpass.

2 – Type: B – Bridge, C - Culvert, P – Pipe. All crossings 20’ and wider including multiple box culverts totaling 20’ or wider shall be classified as a B – Bridge. Culverts are precast of cast-in-place box culverts. Pipes are smaller drainage pipe crossings with or without headwalls.

3 – Description: i.e. 2 spans (Bridge), 2 – 5 X 7’ (Culverts), 2 – 24” RCP (Pipes).

4 – Deck Width: Use “footprint” of culvert/pipes for width on buried culvert/pipes; include full “out to out” dimension, including sidewalks and railings, for width of standard bridges.

5 – Deck Length: Measured along the centerline of the roadway

CONSTRUCTION SUMMARY FOR PONDS

POND TYPE 1	LOCATION (ADDRESS OR LOT / BLOCK #)	SIZE (SY) 2	DRAINAGE AREA (ACRES)	PRIVATE 3	ETJ	COST
D	Block A, Lot 48	2,730	18.45	NO	NO	$85,000.00

1 – BD = Bio–Detention
D = Detention Only
DSF = Detention / Sedimentation / Filtration
F = Filtration Only
S = Sedimentation Only
SF = Sedimentation / Filtration
SFI = Sedimentation / Filtration / Infiltration
SI = Sedimentation / Irrigation
WP = Wet Pond

2 – Approximate boundary area

3 – Provide copy of recorded agreement for privately maintained ponds

CONSTRUCTION SUMMARY FOR DRAINAGE

STORM DRAIN			MANHOLES			INLETS		
SIZE (inches) (H' x W')	MATERIAL TYPE 2	L (FT)	QTY	SIZE (Dia – FT)	MATERIAL TYPE 2	QTY	SIZE Length (feet)	TYPE 1
18"	RCP	809	1	4	PRECAST	10	10	CURB
30"	RCP	287				1	15	CURB
36"	RCP	167						
42"	RCP	637						
48"	RCP	51						

JUNCTION BOXES			OUTFALL STRUCTURES		
QTY	SIZE (FT x FT x FT)	MATERIAL TYPE 2	QTY	SIZE 3	DESCRIPTION 4
1	4X4	PRECAST	1	48"	HEADWALL
2	5X5	PRECAST			
1	6X6	PRECAST			
1	7X7	PRECAST			

CHANNEL			
LENGTH (FT)	BOTTOM WIDTH (FT)	SIDE SLOPE (FT/FT)	LINING MATERIAL TYPE

1) Grate, Area, Curb, Recessed Curb, Combination, Slotted Drain
2) Cast-in-Place, Precast
3) Pipe size / Culvert Size
4) Headwall, Wing Walls, Gabions

CONSTRUCTION SUMMARY FOR WATER

VALVES INSTALLED			PIPE			FIRE HYDRANTS		
SIZE	DESCRIPTION	NO.	SIZE	TYPE	LENGTH	SIZE	TYPE	NO.
AIR RELEASE								
SIZE	TYPE	NO.						
			SERVICES INSTALLED					
			NO.	TYPE				

CONSTRUCTION SUMMARY FOR WASTEWATER

PIPE			MANHOLES					
SIZE	TYPE	LENGTH	DEPTH	MAKE	STA. NO.	B.C.	EYE	STREET
8”	SDR-26	1893’	17’	PRECAST	1+59	NO	2	GRAY FOX LOOP
			10’	PRECAST	4+36	NO	1	GRAY FOX LP
			10’	PRECAST	11+73	NO	1	GRAY FOX LP
			11’	PRECAST	8+40	NO	2	GRAY FOX LP
			12’	PRECAST	5+57	NO	2	GRAY FOX LP
			13’	PRECAST	5+26	NO	2	GRAY FOX LP
			15’	PRECAST	3+67	NO	2	GRAY FOX LP
			18’	PRECAST	2+22	NO	3	GRAY FOX LP
			13’	PRECAST	2+13	NO	2	BLACKBEAR DRIVE
			9’	PRECAST	5+89	NO	1	BLACKBEAR DRIVE

SERVICES INSTALLED

NO.	TYPE
13	Single
25	Double

TYPE OF MANHOLE COATING: SPRAYWALL

LIMITS OF CONSTRUCTION FOR WATER/WASTEWATER PROJECTS ONLY

PROJECT NAME _____ WORK ORDER #_____

W/WW JOB I.D. _____ SUBDIVISION FILE # _____

LIMITS OF PROJECT WILL BE GIVEN BY ADDRESS OF STREETS LISTED BELOW

STREET NAME	FROM	TO

THIS SHEET MUST BE USED WHEN THERE IS NOT A STREET AND DRAINAGE SUMMARY INCLUDED.

Wilco Ranch Phase 3, Section 2 - Final Cost QTYS

ITEM No.	DESCRIPTION OF WORK	SCHEDULED VALUE			
		U/M	QTY	PRICE	AMOUNT
	WASTEWATER IMPROVEMENTS				
1	8-INCH WASTEWATER SDR-26 PVC PIPE, ALL DEPTHS, PER LINEAR FOOT, CIP	LF	1893	$ 60.00	$ 113,580.00
2	STANDARD MANHOLE FOR WASTEWATER, 4-FOOT DIA. PER EACH, CIP	EA	10	$ 6,500.00	$ 65,000.00
3	EXTRA DEPTH, 4-FOOT MANHOLE, PER VERTICAL LINEAR FOOT, CIP	VF	46	$ 13,800.00	$ 634,800.00
4	SINGLE WASTEWATER SERVICE PER EACH, CIP	EA	13	$ 1,400.00	$ 18,200.00
5	DOUBLE WASTEWATER SERVICE PER EACH, CIP	EA	25	$ 1,600.00	$ 40,000.00
6	TRENCH SAFETY SYSTEMS (ALL DEPTHS) PER LINEAR FOOT, CIP	LF	1893	$ 2.00	$ 3,786.00
	Subtotal				**$ 875,366.00**
	DRAINAGE IMPROVEMENTS				
1	18-INCH RCP, CLASS III PIPE (ALL DEPTHS) PER LINEAR FOOT, CIP	LF	809	$ 55.00	$ 44,495.00
2	30-INCH RCP, CLASS III PIPE (ALL DEPTHS) PER LINEAR FOOT, CIP	LF	287	$ 90.00	$ 25,830.00
3	36-INCH RCP, CLASS III PIPE (ALL DEPTHS) PER LINEAR FOOT, CIP	LF	167	$ 130.00	$ 21,710.00
4	42-INCH RCP, CLASS III PIPE (ALL DEPTHS) PER LINEAR FOOT, CIP	LF	637	$ 150.00	$ 95,550.00
5	48-INCH RCP, CLASS III PIPE (ALL DEPTHS) PER LINEAR FOOT, CIP	LF	51	$ 210.00	$ 10,710.00
6	48" HEADWALL, PER EACH, CIP	EA	1	$ 3,500.00	$ 3,500.00
7	TRENCH SAFETY, PER LINEAR FOOT, CIP	LF	1951	$ 1.50	$ 2,926.50
8	18-INCH SAFETY END TREATMENTS, PER EACH, CIP	EA	2	$ 3,200.00	$ 6,400.00
9	4X4 BOX MANHOLE, PER EACH, CIP	EA	1	$ 4,000.00	$ 4,000.00
10	5X5 BOX MANHOLE, PER EACH, CIP	EA	2	$ 4,500.00	$ 9,000.00
11	6X6 BOX MANHOLE, PER EACH, CIP	EA	1	$ 6,000.00	$ 6,000.00
12	7X7 BOX MANHOLE, PER EACH, CIP	EA	1	$ 8,500.00	$ 8,500.00
13	STANDARD MANHOLE FOR STORM, 4-FOOT DIA, PER EACH, CIP	EA	1	$ 5,000.00	$ 5,000.00
14	10-FOOT STANDARD CURB INLET PER EACH, CIP	EA	10	$ 3,900.00	$ 39,000.00
15	15-FOOT STANDARD CURB INLET PER EACH, CIP	EA	1	$ 5,650.00	$ 5,650.00
16	DETENTION POND, INCLUDING ALL ITEMS SHOWN IN PLANS, TRICKLE CHANNEL, RIP RAP, WEIR, WALLS... ETC., PER LUMP SUM	LS	1	$ 85,000.00	$ 85,000.00
17					
	Subtotal				**$ 373,271.50**
	EROSION AND SEDIMENTATION CONTROLS				
1	HYDROMULCH SEEDING FOR EROSION CONTROL (ALL DISTURBED AREAS WITHIN ROW AND BORROW PIT), PER SQUARE YARD, CIP	SY	46593	$ 0.75	$ 34,944.75

Wilco Ranch Phase 3, Section 2 - Final Cost QTYS

2	ROCK BERM, PER LINEAR FOOT, CIP	LF	50.0	$	30.00	$	1,500.00
3	INLET PROTECTION (NEW INLET) PER EACH, CIP	EA	11	$	100.00	$	1,100.00
4	SILT FENCE FOR EROSION CONTROL PER LINEAR FOOT, CIP	LF	2437	$	2.50	$	6,092.50
5	STABILIZED CONSTRUCTION ENTRANCE PER EACH, CIP	EA	1	$	1,000.00	$	1,000.00
	Subtotal					**$**	**44,637.25**
	STREET IMPROVEMENTS						
1	SUBGRADE PREPARATION PER SQUARE YARD, CIP	SY	11126	$	2.00	$	22,252.00
2	CLEAR AND GRUB, PER ACRE, CIP	AC	13	$	325.00	$	4,225.00
3	CRUSHED LIMESTONE BASE MATERIAL, 16-INCH THICKNESS, PER SQUARE YARD, CIP	SY	5179	$	18.50	$	95,811.50
4	CRUSHED LIMESTONE BASE MATERIAL, 20-INCH THICKNESS, PER SQUARE YARD, CIP	SY	5947	$	26.00	$	154,622.00
5	HMAC, 2-INCH THICKNESS, TYPE D, PER SQUARE YARD, CIP	SY	8578	$	13.50	$	115,803.00
6	MACHINE LAID CURB AND GUTTER, PER LINEAR FOOT, CIP	LF	4504	$	15.00	$	67,560.00
7	RIBBON CURB, PER LINEAR FOOT, CIP	LF	84	$	25.00	$	2,100.00
8	P.C. CONCRETE SIDEWALK, 5-FEET WIDE, 4-INCH THICKNESS PER LINEAR FOOT, CIP	LF	452	$	32.00	$	14,464.00
9	P.C. SIDEWALK RAMP WITH PAVERS (TYPE I) PER EACH, CIP	EA	16	$	1,850.00	$	29,600.00
10	P.C. CONCRETE VALLEY GUTTER, PER EACH, CIP	EA	4	$	4,200.00	$	16,800.00
11	STREET SIGNS AND PAVEMENT MARKINGS PER LUMP SUM, CIP	LS	1	$	10,400.00	$	10,400.00
12	STREET END BARRICADES PER EACH, CIP	EA	1	$	1,179.00	$	1,179.00
13	EXCAVATION (INCLUDES LOTS), PER CUBIC YARD, CIP	CY	9926	$	4.75	$	47,148.50
14	EMBANKMENT (INCLUDES LOTS), PER CUBIC YARD, CIP	CY	10505	$	5.25	$	55,151.25
15	FINE GRADING OF LOTS (INCLUDING BLUE TOPS), PER LOT, CIP	LOT	65	$	375.00	$	24,375.00
	Subtotal					**$**	**661,491.25**

TOTAL COST FOR ALL IMPROVEMENTS **$ 1,954,766.00**

5/17/2022

STATE OF TEXAS
JOSHUA K. JANYSEK
134412
LICENSED
PROFESSIONAL ENGINEER

CONSTRUCTION PLANS FOR WILCO RANCH, PHASE III SECTION 2 WILLIAMSON COUNTY, TEXAS "PAVING, DRAINAGE, WATER & WASTEWATER IMPROVEMENTS"

JULY 2021

SUMMARY NOTES

ENGINEER: BGE, INC., TBPE F-1046
1701 DIRECTORS BOULEVARD, SUITE 1000
AUSTIN, TEXAS 78744
(512) 879-0400

SURVEYOR: BGE, INC., TBPE F-1046
101 WEST LOUIS HENNA BLVD, SUITE 400
AUSTIN, TX 78728
(512) 879-0400

PROPERTY OWNER: ASHTON AUSTIN RESIDENTIAL LLC
10721 RESEARCH BLVD. B210
AUSTIN, TX 78759

UTILITY PROVIDERS: ONCOR ENERGY
ATMOS GAS

LEGAL DESCRIPTION:

12.530 ACRE TRACT OF LAND SITUATED IN THE JAMES SHELTON SURVEY, ABSTRACT NO. 560, WILLIAMSON COUNTY, TEXAS; BEING A PORTION OF A CALLED 23.517 ACRE TRACT OF LAND AS CONVEYED UNTO ASHTON AUSTIN RESIDENTIAL, L.L.C. IN DOCUMENT NO. 2020016718 OF THE OFFICIAL PUBLIC RECORDS OF WILLIAMSON COUNTY, TEXAS, AND A PORTION OF A CALLED 2.405 ACRE TRACT OF LAND AS CONVEYED UNTO ASHTON AUSTIN RESIDENTIAL L.L.C. IN DOCUMENT NUMBER 2020016624 OF THE OFFICIAL PUBLIC RECORDS OF WILLIAMSON COUNTY, TEXAS;

APPROVED BY

WILLIAMSON COUNTY ESD #3 — DATE 8-3-2021

CITY OF HUTTO ENGINEERING — DATE 8-11-2021

JONAH WATER SPECIAL UTILITY DISTRICT — DATE 8/9/2021

BENCHMARK

BENCHMARK #1 — BOX CUT IN CONCRETE ON "E" INLET ON NORTH RIGHT OF WAY OF LIMMER LOOP/COUNTY ROAD 164 AT THE SOUTHEAST CORNER OF THE PROPERTY LOCATED AT 2445 LIMMER LP., APPROXIMATELY 1,525 FEET WEST FROM THE INTERSECTION OF LIMMER LOOP/COUNTY ROAD 164 AND ED SCHMIDT BOULEVARD/COUNTY ROAD 119.

GRID NORTHING: 10177474.6033
GRID EASTING: 3168195.6307
ELEVATION: 709.94 FEET NAVD-88

SUBMITTED BY

TIMOTHY M. HOLLAND, P.E.
BGE, INC. TBPE NO. F-1046
1701 DIRECTORS BOULEVARD, SUITE 1000
AUSTIN, TEXAS 78744
(512) 879-0400 (MAIN)

DATE

STATE OF TEXAS — TIMOTHY M. HOLLAND — 94848 — LICENSED PROFESSIONAL ENGINEER — 07/12/2021

ALL RESPONSIBILITY FOR THE ADEQUACY OF THESE PLANS REMAINS WITH THE ENGINEER WHO PREPARED THEM. IN ACCEPTING THESE PLANS, THE CITY OF HUTTO MUST RELY UPON THE ADEQUACY OF THE WORK OF THE DESIGN ENGINEER.

VICINITY MAP

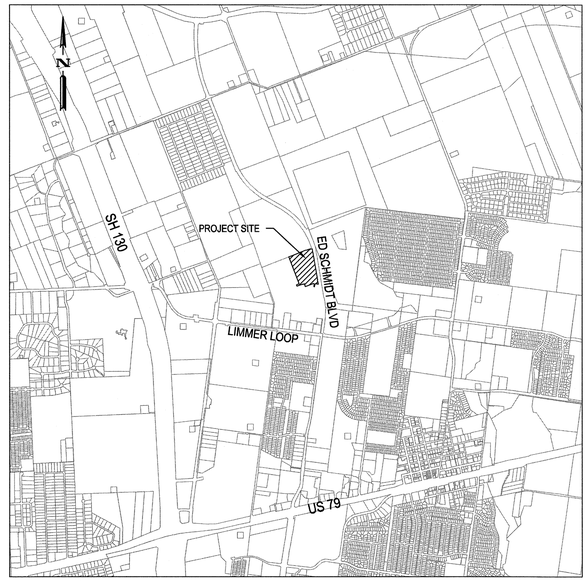

KEY MAP
N.T.S.

NOTES:
1. THIS PROJECT IS LOCATED WITHIN THE COTTONWOOD CREEK WATERSHED.
2. THIS PROJECT IS NOT LOCATED WITHIN THE EDWARDS AQUIFER RECHARGE ZONE.
3. GRADING SHOWN FOR DRAINAGE WILL BE COMPLETED WITH THIS PROJECT.
4. NO PORTION OF THIS TRACT IS ENCROACHED BY ANY SPECIAL FLOOD HAZARD AREAS INUNDATED BY THE 1% ANNUAL CHANCE FLOODPLAIN AS IDENTIFIED BY THE U.S. FEDERAL EMERGENCY MANAGEMENT AGENCY BOUNDARY MAP (FLOOD INSURANCE RATE MAP) COMMUNITY PANEL NUMBER 48491C0515F AND 48491C0520F, EFFECTIVE DATE DECEMBER 20, 2019, FOR WILLIAMSON COUNTY, TEXAS.*
5. DETENTION POND WILL BE OWNED AND MAINTAINED BY HOA
6. CITY OF HUTTO PROJECT No. 1783-ENG

REVISIONS/CORRECTIONS

SHEET LIST	DESCRIPTION	DATE	REVISE (R) ADD (A) VOID (V) SHEET NO.'S	ACCEPTED BY	APPROVAL DATE

Sheet List Table

Sheet Number	Sheet Title
1	COVER SHEET
2	PLAT (1 OF 2)
3	PLAT (2 OF 2)
4	GENERAL NOTES (1 OF 2)
5	GENERAL NOTES (2 OF 2)
6	EROSION CONTROL PLAN
7	GRAY FOX LOOP 1+00 TO 9+00
8	GRAY FOX LOOP 9+00 TO END
9	BLACKBEAR DR 1+00 TO 8+00
10	BLACKBEAR DR 8+00 TO END
11	PRE-DEVELOPMENT DRAINAGE AREAS
12	POST-DEVELOPMENT DRAINAGE AREAS
13	DRAINAGE AREA MAP
14	DRAINAGE CALCULATIONS
15	OVERALL STORM PLAN
16	SSL-A PLAN AND PROFILE (1+00 TO END)
17	SSL-B PLAN AND PROFILE (1+00 TO END)
18	SSL-E PLAN AND PROFILE (1+00 TO END)
19	CULVERT P&P (1+00 TO END)
20	LATS
21	OVERALL GRADING PLAN
22	DETENTION POND
23	OVERALL WASTEWATER PLAN
24	WW-A PLAN AND PROFILE (1+00 TO 7+00)
25	WW-A PLAN AND PROFILE (7+00 TO END)
26	WW-B PLAN AND PROFILE(1+00 TO END)
27	WW-C PLAN AND PROFILE(1+00 TO END)
28	OVERALL WATER PLAN
29	16" WL-C PLAN AND PROFILE (1+00 TO END)
30	OVERALL SIGNAGE PLAN
31	EROSION DETAILS
32	STREET DETAILS (1 OF 2)
33	STREET DETAILS (2 OF 2)
34	STORM DETAILS(1 OF 2)
35	STORM DETAILS(2 OF 2)
36	WASTEWATER DETAILS (1 OF 3)
37	WASTEWATER DETAILS (2 OF 3)
38	WASTEWATER DETAILS (3 OF 3)
39	WATER DETAILS (1 OF 3)
40	WATER DETAILS (2 OF 3)
41	WATER DETAILS (3 OF 3)
42	TxDOT DETAILS (1 OF 3)
43	TxDOT DETAILS (2 OF 3)
44	TxDOT DETAILS (3 OF 3)

BGE, Inc.
1701 Directors Boulevard, Suite 1000
Austin, TX 78744
Tel: 512-879-0400 • www.browngay.com
TBPE Registration No. F-1046

RECORD DRAWING

THESE RECORD DRAWINGS HAVE BEEN PREPARED USING INFORMATION PROVIDED BY THE CONSTRUCTION CONTRACTOR AND/OR OWNER. THE SIGNATURE BELOW SIGNIFIES THAT THESE PLANS HAVE BEEN REVISED IN ACCORDANCE WITH THE INFORMATION PROVIDED. THIS DOCUMENT IS FOR INFORMATION AND REFERENCE IN CONNECTION WITH THE OWNER'S USE AND OCCUPANCY OF THE PROJECT AND IS NOT INTENDED FOR BID, PERMIT OR CONSTRUCTION.

By: Josh Janysek Date: 5/10/2022

BROWN & GAY ENGINEERS
TBPE REGISTRATION No. F-1046

BENCHMARK #1 BOX CUT IN CONCRETE ON "E" INLET ON NORTH RIGHT OF WAY OF LIMMER LOOP/COUNTY ROAD 164 AT THE SOUTHEAST CORNER OF THE PROPERTY LOCATED AT 2445 LIMMER LP., APPROXIMATELY 1,525 FEET WEST FROM THE INTERSECTION OF LIMMER LOOP/COUNTY ROAD 164 AND ED SCHMIDT BOULEVARD/COUNTY ROAD 119.

GRID NORTHING: 10177474.60
GRID EASTING: 3168195.63
ELEVATION: 709.94 FEET NAVD-88

OWNER: ASHTON WOODS
ADDRESS: 10721 RESEARCH BLVD, B-210
AUSTIN, TX, 78759
PHONE: ________

ACREAGE: 12.530 ACRES
SURVEY(S): JAMES SHELTON SURVEY, ABSTRACT NO. 560

NUMBER & ACREAGE BY LOT TYPE: RESIDENTIAL: 65 LOTS/8.604 ACRES
OPEN SPACE: 2 LOTS/0.122 ACRE
OPEN SPACE/DETENTION/DRAINAGE LOT: 1 LOT/0.873 ACRE
RIGHT-OF-WAY: 2.931 ACRES

SUBMITTAL DATE: ________

SURVEYOR: BGE, INC. (DION P. ALBERTSON, RPLS)
PHONE: (210) 581-3619
ENGINEER: BGE, INC. (TIMOTHY M. HOLLAND, PE)
PHONE: (512) 879-0433

BEARING BASIS NOTE:

BEARING ORIENTATION IS BASED ON THE TEXAS STATE PLANE COORDINATE SYSTEM, CENTRAL ZONE 4203, NAD83. DISTANCES SHOWN HEREON ARE IN SURFACE AND CAN BE CONVERTED TO GRID BY DIVIDING BY THE COMBINED SCALE FACTOR = 1.0001184402

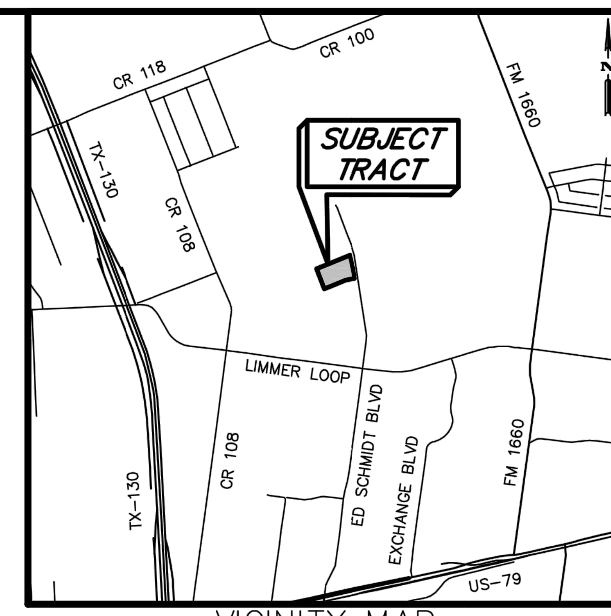

VICINITY MAP
NOT TO SCALE

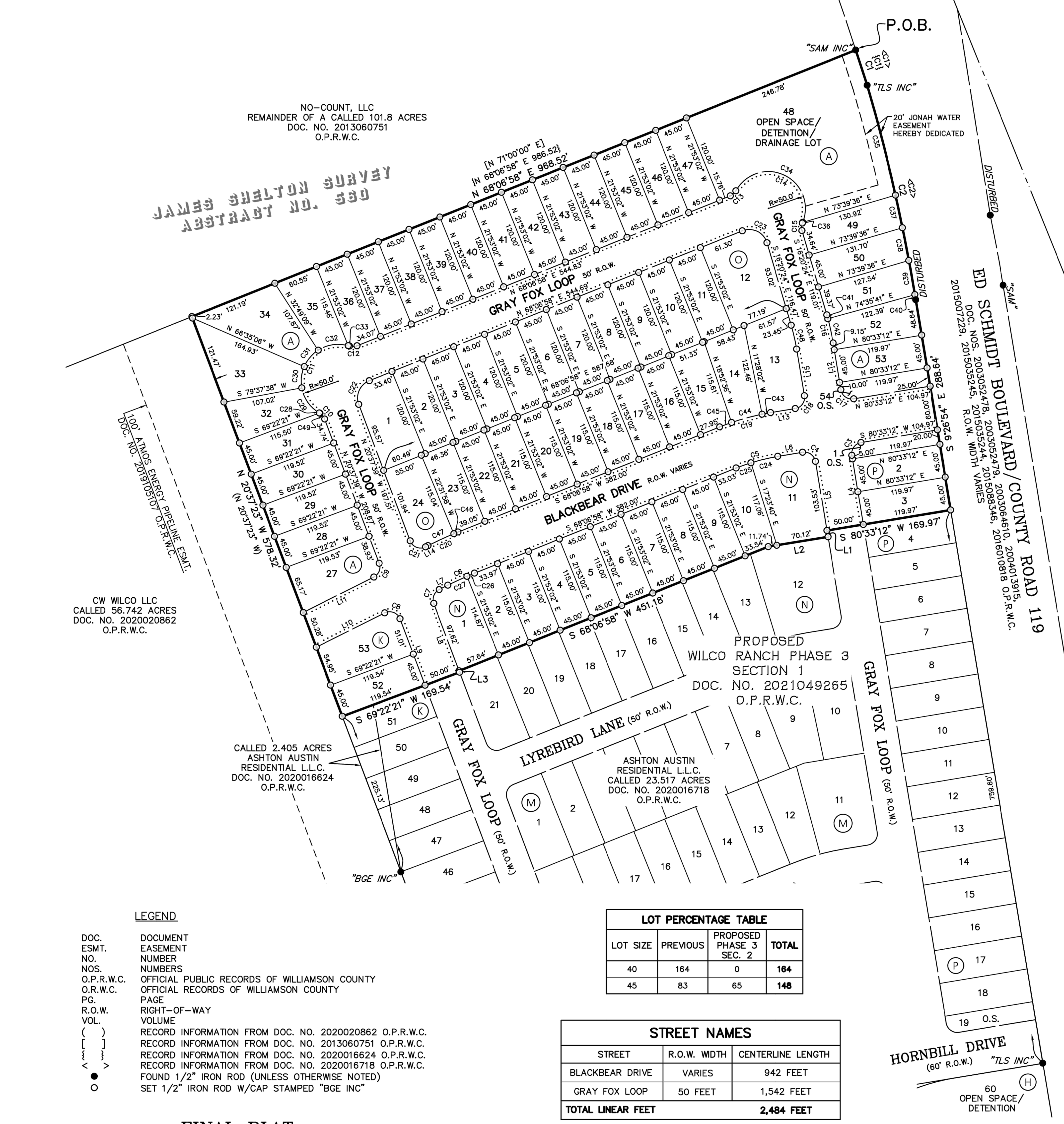

LEGEND

DOC.	DOCUMENT
ESMT.	EASEMENT
NO.	NUMBER
NOS.	NUMBERS
O.P.R.W.C.	OFFICIAL PUBLIC RECORDS OF WILLIAMSON COUNTY
O.R.W.C.	OFFICIAL RECORDS OF WILLIAMSON COUNTY
PG.	PAGE
R.O.W.	RIGHT-OF-WAY
VOL.	VOLUME
( )	RECORD INFORMATION FROM DOC. NO. 2020020862 O.P.R.W.C.
[ ]	RECORD INFORMATION FROM DOC. NO. 2013060751 O.P.R.W.C.
{ }	RECORD INFORMATION FROM DOC. NO. 2020016624 O.P.R.W.C.
< >	RECORD INFORMATION FROM DOC. NO. 2020016718 O.P.R.W.C.
●	FOUND 1/2" IRON ROD (UNLESS OTHERWISE NOTED)
○	SET 1/2" IRON ROD W/CAP STAMPED "BGE INC"

LOT PERCENTAGE TABLE

LOT SIZE	PREVIOUS	PROPOSED PHASE 3 SEC. 2	TOTAL
40	164	0	**164**
45	83	65	**148**

STREET NAMES

STREET	R.O.W. WIDTH	CENTERLINE LENGTH
BLACKBEAR DRIVE	VARIES	942 FEET
GRAY FOX LOOP	50 FEET	1,542 FEET
TOTAL LINEAR FEET		**2,484 FEET**

LAND USE SCHEDULE

DESCRIPTION	NO.	ACREAGE
RESIDENTIAL	65	8.604 ACRES
RIGHT-OF-WAY	–	2.931 ACRES
OPEN SPACE	2	0.122 ACRE
OPEN SPACE/DETENTION/ DRAINAGE LOT	1	0.873 ACRE
TOTAL	**68**	**12.530 ACRES**

FINAL PLAT
WILCO RANCH PHASE 3 SECTION 2

A SUBDIVISION OF 12.530 ACRES OF LAND
LOCATED IN THE
JAMES SHELTON SURVEY, ABSTRACT NO. 560
WILLIAMSON COUNTY, TEXAS

BGE, Inc.
7330 San Pedro Ave., Suite 202
San Antonio, TX 78216
210-581-3600 • www.bgeinc.com
TBPELS Registration No. F-1046
TBPELS Licensed Surveying Firm No. 10194490

CURVE TABLE

NUMBER	ARC LENGTH	RADIUS	DELTA	CHORD BEARING	CHORD DISTANCE
C1	50.20'	2,398.03'	1°11'58"	S 17°59'26" E	50.20'
C2	297.90'	2,440.00'	6°59'43"	S 12°45'44" E	297.72'
C3	23.56'	15.00'	90°00'00"	S 35°33'12" W	21.21'
C4	23.56'	15.00'	90°00'00"	N 54°26'48" W	21.21'
C5	58.61'	270.00'	12°26'14"	S 74°20'05" W	58.49'
C6	39.63'	470.00'	4°49'50"	S 65°42'03" W	39.61'
C7	21.97'	15.00'	83°54'47"	S 21°19'45" W	20.06'
C8	25.16'	15.00'	96°05'13"	N 68°40'15" W	22.31'
C9	21.97'	15.00'	83°54'47"	N 21°19'45" E	20.06'
C10	10.40'	15.00'	39°42'54"	N 40°29'06" W	10.19'
C11	146.76'	50.00'	168°10'26"	S 23°44'40" W	99.47'
C12	10.40'	15.00'	39°42'54"	N 87°58'26" E	10.19'
C13	10.40'	15.00'	39°42'54"	N 48°15'31" E	10.19'
C14	152.69'	50.00'	174°58'26"	N 64°06'43" W	99.90'
C15	10.40'	15.00'	39°42'54"	S 03°31'03" W	10.19'
C16	39.10'	325.00'	6°53'37"	N 12°53'36" W	39.08'
C17	23.56'	15.00'	90°00'00"	S 54°26'48" E	21.21'
C18	23.56'	15.00'	90°00'00"	N 35°33'12" E	21.21'
C19	71.63'	330.00'	12°26'14"	S 74°20'05" W	71.49'
C20	44.68'	530.00'	4°49'50"	S 65°42'03" W	44.67'
C21	25.16'	15.00'	96°05'13"	S 68°40'15" E	22.31'
C22	38.72'	25.00'	88°44'37"	S 23°44'40" W	34.97'
C23	41.69'	25.00'	95°32'37"	N 64°06'43" W	37.02'
C24	37.45'	270.00'	7°56'52"	S 76°34'46" W	37.42'
C25	21.16'	270.00'	4°29'22"	S 70°21'39" W	21.15'
C26	11.03'	470.00'	1°20'39"	S 67°26'39" W	11.03'
C27	28.60'	470.00'	3°29'11"	S 65°01'44" W	28.60'

CURVE TABLE

NUMBER	ARC LENGTH	RADIUS	DELTA	CHORD BEARING	CHORD DISTANCE
C28	42.73'	50.00'	48°57'55"	S 34°51'20" E	41.44'
C29	42.73'	50.00'	48°57'55"	S 34°51'20" E	41.44'
C30	29.49'	50.00'	33°47'16"	S 06°31'16" W	29.06'
C31	29.47'	50.00'	33°45'57"	S 40°17'53" W	29.04'
C32	42.47'	50.00'	48°40'20"	S 81°31'01" W	41.21'
C33	1.73'	50.00'	1°58'42"	N 73°09'28" W	1.73'
C34	151.69'	50.00'	173°49'25"	N 64°41'14" W	99.85'
C35	153.68'	2,440.00'	3°36'31"	N 14°27'20" W	153.65'
C36	1.00'	50.00'	1°09'02"	N 22°47'59" E	1.00'
C37	45.12'	2,440.00'	1°03'34"	N 12°07'17" W	45.12'
C38	45.19'	2,440.00'	1°03'40"	N 11°03'40" W	45.19'
C39	46.96'	2,440.00'	1°06'10"	N 09°58'45" W	46.96'
C40	6.95'	2,440.00'	0°09'48"	N 09°20'46" W	6.95'
C41	5.30'	325.00'	0°56'05"	N 15°52'22" W	5.30'
C42	33.80'	325.00'	5°57'32"	N 12°25'34" W	33.79'
C43	11.64'	330.00'	2°01'15"	S 79°32'35" W	11.64'
C44	42.68'	330.00'	7°24'34"	S 74°49'41" W	42.65'
C45	17.32'	330.00'	3°00'25"	S 69°37'11" W	17.32'
C46	6.00'	530.00'	0°38'57"	S 67°47'30" W	6.00'
C47	38.68'	530.00'	4°10'54"	S 65°22'35" W	38.67'
C48	33.09'	275.00'	6°53'37"	N 12°53'36" W	33.07'
C49	10.40'	15.00'	39°42'54"	N 40°29'06" W	10.19'

RECORD CURVE TABLE

NUMBER	ARC LENGTH	RADIUS	DELTA	CHORD BEARING	CHORD DISTANCE
{C1}	{50.20'}	{2,398.03'}	{01°11'58"}	{S 17°59'26" W}	{50.20'}
<C1>	<50.20'>	<2,398.03'>	<01°11'58">	<S 17°59'26" W>	<50.20'>
<C2>	<297.90'>	<2,440.00'>	<06°59'43">	<S 12°45'44" W>	<297.72'>

LINE TABLE

NUMBER	BEARING	DISTANCE
L1	S 09°26'48" E	8.53'
L2	S 80°33'12" W	81.86'
L3	S 20°37'39" E	1.89'
L4	S 09°26'48" E	95.00'
L5	N 09°26'48" W	95.00'
L6	S 80°33'12" W	33.97'
L7	S 63°17'08" W	13.26'
L8	S 20°37'39" E	99.51'
L9	N 20°37'39" W	96.01'
L10	S 63°17'08" W	103.53'
L11	N 63°17'08" E	106.72'
L12	S 09°26'48" E	64.15'
L13	S 80°33'12" W	33.97'
L14	S 63°17'08" W	3.66'
L15	S 09°26'48" E	64.15'

LEGAL DESCRIPTION

FIELD NOTES FOR A 12.530 ACRE TRACT OF LAND SITUATED IN THE JAMES SHELTON SURVEY, ABSTRACT NO. 560, WILLIAMSON COUNTY, TEXAS; BEING A PORTION OF A CALLED 23.517 ACRE TRACT OF LAND AS CONVEYED UNTO ASHTON AUSTIN RESIDENTIAL, L.L.C. IN DOCUMENT NO. 2020016718 OF THE OFFICIAL PUBLIC RECORDS OF WILLIAMSON COUNTY, TEXAS, AND A PORTION OF A CALLED 2.405 ACRE TRACT OF LAND AS CONVEYED UNTO ASHTON AUSTIN RESIDENTIAL L.L.C. IN DOCUMENT NUMBER 2020016624 OF THE OFFICIAL PUBLIC RECORDS OF WILLIAMSON COUNTY, TEXAS; SAID 12.530 ACRE TRACT OF LAND BEING MORE PARTICULARLY DESCRIBED BY METES AND BOUNDS AS FOLLOWS:

BEGINNING at a 1/2-inch iron rod with a cap stamped "SAM INC" found on the curvalinear west right-of-way line of Ed Schmidt Boulevard/County Road 119 (R.O.W. ~ Varies) as dedicated by Document Nos. 2003052478, 2003052479, 2003064610, 2004013915, 2015007229, 2015035244, 2015035245, 2015088346, and 2016010818 all recorded in the Official Public Records of Williamson County Texas, at the common corner of a called 101.8 acre tract of land (Tract 2) as conveyed unto No-Count, LLC in Document Number 2013060751 of the Official Public Records of Williamson County, Texas, and said 2.405 acre tract at the beginning of a non-tangent curve for the northeast corner and POINT OF BEGINNING of the herein described tract;

THENCE, curving to the right, coincident with the common line of said right-of-way and the 2.405 acre tract with a radius of 2,398.03 feet, an arc length of 50.20 feet, a central angle of 01°11'58", a chord bearing of S 17°59'26" E, and a chord distance of 50.20 feet to a 1/2-inch iron rod with a cap stamped "TLS INC" found at the common corner of the 2.405 acre tract and the aforementioned 23.517 acre tract for a point of compound curvature of the herein described tract;

THENCE, curving to the right, coincident with the common line of said right-of-way and said 23.517 acre tract, with a radius of 2,440.00 feet, an arc length of 297.90 feet, a central angle of 06°59'43", a chord bearing of S 12°45'44" E, and a chord distance of 297.72 feet to a 1/2-inch iron rod found (disturbed) at the end of this curve;

THENCE, S 09°26'54" E, continuing coincident with said common line, a distance of 288.64 feet to a 1/2-inch iron rod with a cap stamped "BGE INC" set for the southeast corner of the herein described tract;

THENCE, departing said common line, over and across the 23.517 acre tract and the aforementioned 2.405 acre tract the following six (6) courses:

1)S 80°33'12" W, a distance of 169.97 feet to a 1/2-inch iron rod with a cap stamped "BGE INC" set for a re-entrant corner of the herein described tract;

2) S 09°26'48" E, a distance of 8.53 feet to a 1/2-inch iron rod with a cap stamped "BGE INC" set for a corner of the herein described tract;

3) S 80°33'12" W, a distance of 81.86 feet to a 1/2-inch iron rod with a cap stamped "BGE INC" set for an angle point of the herein described tract;

4) S 68°06'58" W, a distance of 451.18 feet to a 1/2-inch iron rod with a cap stamped "BGE INC" set for a re-entrant corner of the herein described tract;

5) S 20°37'39" E, a distance of 1.89 feet to a 1/2-inch iron rod with a cap stamped "BGE INC" set for a corner of the herein described tract;

6) S 69°22'21" W, a distance of 169.54 feet to a 1/2-inch iron rod with a cap stamped "BGE INC" set on the common line of a called 56.742 acre tract of land as conveyed unto CW-WILCO, LLC in Document Number 2020020862 of the Official Public Records of Williamson County, Texas, and the 2.405 acre tract for the southwest corner of the herein described tract;

THENCE, N 20°37'23" W, coincident with said common line, a distance of 578.32 feet to a 1/2-inch iron rod with a cap stamped "BGE INC" set on the south line of the aforementioned 101.8 acre tract at the common corner of the 2.405 acre tract and said 56.742 acre tract for the northwest corner of the herein described tract;

THENCE, N 68°06'58" E, coincident with the common line of the 2.405 acre tract and said 101.8 acre tract, a distance of 968.52 feet to the POINT OF BEGINNING and containing 12.530 acres of land, more or less

R – RESIDENTIAL O.S. – OPEN SPACE O.S.D. – OPEN SPACE/DRAINAGE

LOT AREA TABLE

LOT	BLOCK	SQ. FT.	TYPE
27	A	7,298	R
28	A	5,379	R
29	A	5,379	R
30	A	5,378	R
31	A	5,352	R
32	A	5,044	R
33	A	8,776	R
34	A	8,811	R
35	A	5,258	R
36	A	5,384	R
37	A	5,400	R
38	A	5,400	R
39	A	5,400	R
40	A	5,400	R
41	A	5,400	R
42	A	5,400	R
43	A	5,400	R
44	A	5,400	R
45	A	5,400	R
46	A	5,400	R
47	A	5,400	R
48	A	38,045	O.S.D.
49	A	5,991	R
50	A	5,836	R
51	A	5,712	R
52	A	5,938	R
53	A	5,399	R
54	A	2,951	O.S.

LOT AREA TABLE

LOT	BLOCK	SQ. FT.	TYPE
1	N	6,350	R
2	N	5,175	R
3	N	5,175	R
4	N	5,175	R
5	N	5,175	R
6	N	5,175	R
7	N	5,175	R
8	N	5,175	R
9	N	5,175	R
10	N	5,726	R
11	N	9,210	R

LOT AREA TABLE

LOT	BLOCK	SQ. FT.	TYPE
1	O	6,973	R
2	O	5,400	R
3	O	5,400	R
4	O	5,400	R
5	O	5,400	R
6	O	5,400	R
7	O	5,400	R
8	O	5,400	R
9	O	5,400	R
10	O	5,400	R
11	O	5,400	R
12	O	9,794	R
13	O	7,983	R
14	O	5,959	R
15	O	5,558	R
16	O	5,175	R
17	O	5,175	R
18	O	5,175	R
19	O	5,175	R
20	O	5,175	R
21	O	5,175	R
22	O	5,175	R
23	O	5,257	R
24	O	6,567	R

LOT AREA TABLE

LOT	BLOCK	SQ. FT.	TYPE
52	K	5,379	R
53	K	7,269	R

LOT AREA TABLE

LOT	BLOCK	SQ. FT.	TYPE
1	P	2,351	O.S.
2	P	5,399	R
3	P	5,399	R

FINAL PLAT
WILCO RANCH PHASE 3 SECTION 2

A SUBDIVISION OF 12.530 ACRES OF LAND
LOCATED IN THE
JAMES SHELTON SURVEY, ABSTRACT NO. 560
WILLIAMSON COUNTY, TEXAS

BGE, Inc.
7330 San Pedro Ave., Suite 202
San Antonio, TX 78216
210-581-3600 • www.bgeinc.com
TBPELS Registration No. F-1046
TBPELS Licensed Surveying Firm No. 10194490

REV	DESCRIPTION	DATE	APR
△			
△			
△			
△			
△			

DESIGNED BY: DAZ
REVIEWED BY: TMH
DRAWN BY: DAZ

BGE, INC.
1701 DIRECTORS BOULEVARD, SUITE 1000
AUSTIN, TX 78744
TBPE Registration No. F-1046
TEL: 512-879-0400 www.browngay.com

WILCO RANCH PHASE 3 SECTION 2
HUTTO, TEXAS

PLAT (1 OF 2)

SUBMITTAL DATE: 12-10-2020

STATE OF TEXAS
TIMOTHY M. HOLLAND
94848
LICENSED PROFESSIONAL ENGINEER
8/3/2021

SHEET 2 OF 44

G:\TXC\Projects\Ashton_Woods\8022-00-Wilco_Ranch_Ph3_Sec2\LD\01_CADD\01_Shts\C-SP-PLAT-PH 3-SEC 2.dwg Layout: PLAT (1 OF 2) Plotted: 8/3/2021 8:27:51 AM

STATE OF TEXAS §
COUNTY OF WILLIAMSON §

KNOW ALL MEN BY THESE PRESENTS:

THAT ASHTON AUSTIN RESIDENTIAL, L.L.C., ACTING HEREIN BY AND THROUGH ASHTON WOODS–AUSTIN DIVISION, BY ITS GENERAL PARTNER, KEITH PERSON, VICE PRESIDENT OF LAND, BEING THE OWNER OF A CALLED 2.405 ACRE TRACT OF LAND OUT OF THE JAMES SHELTON SURVEY A–560, WILLIAMSON COUNTY, TEXAS CONVEYED TO IT BY SPECIAL WARRANTY DEED RECORDED IN DOC. NO. 2020016624 AND A CALLED 23.517 ACRES OF LAND OUT OF THE JAMES SHELTON SURVEY A–560, WILLIAMSON COUNTY, TEXAS AS CONVEYED TO IT BY SPECIAL WARRANTY DEED RECORDED IN DOC. NO. 2020016718 OF THE OFFICIAL PUBLIC RECORDS OF WILLIAMSON COUNTY; DOES HEREBY SUBDIVIDE 12.530 ACRES OF LAND IN ACCORDANCE WITH THE ATTACHED MAP OR PLAT SHOWN HEREON, PURSUANT TO CHAPTERS 212 AND 232 OF THE TEXAS LOCAL GOVERNMENT CODE, TO BE KNOWN AS:

WILCO RANCH PHASE 3 SECTION 2

AND DOES HEREBY DEDICATE TO THE PUBLIC THE USE OF THE STREETS AND EASEMENTS SHOWN HEREON, SUBJECT TO ANY EASEMENTS AND/OR RESTRICTIONS HERETOFORE GRANTED AND NOT RELEASED.

WITNESS MY HAND, THIS THE _____ DAY OF _____, 20___, A.D.

_____
KEITH PEARSON, VICE PRESIDENT OF LAND
ASHTON WOODS – AUSTIN DIVISION
10721 RESEARCH BLVD. B–210
AUSTIN, TEXAS 78759

STATE OF TEXAS §
COUNTY OF WILLIAMSON §

BEFORE ME, THE UNDERSIGNED AUTHORITY, PERSONALLY APPEARED KEITH PEARSON, VICE PRESIDENT OF LAND KNOWN TO ME TO BE THE PERSON WHOSE NAME IS SUBSCRIBED TO THE FOREGOING INSTRUMENT AND ACKNOWLEDGED TO ME THAT HE EXECUTED THE SAME FOR THE PURPOSES AND CONSIDERATION THEREIN EXPRESSED AND IN THE CAPACITY THEREIN STATED.

_____
NOTARY PUBLIC, STATE OF TEXAS

_____
PRINT NOTARY'S NAME
MY COMMISSION EXPIRES _____

NO PORTION OF THIS SUBDIVISION LIES WITHIN THE DESIGNATED 100 YEAR FLOODPLAIN AS DEFINED BY F.E.M.A. MAP NO. 48491C0520F, REVISED DECEMBER 19, 2019.

I, TIMOTHY M. HOLLAND, AM AUTHORIZED UNDER THE LAWS OF THE STATE OF TEXAS, TO PRACTICE THE PROFESSION OF ENGINEERING, AND DO HEREBY CERTIFY THAT THIS PLAT IS FEASIBLE FROM AN ENGINEERING STANDPOINT, AND IS TRUE AND CORRECT TO THE BEST OF MY KNOWLEDGE.

PRELIMINARY, THIS DOCUMENT SHALL NOT BE RECORDED FOR ANY PURPOSE AND SHALL NOT BE USED OR VIEWED OR RELIED UPON AS A FINAL SURVEY DOCUMENT

_____ _____
TIMOTHY M. HOLLAND, P.E. DATE
LICENSED PROFESSIONAL ENGINEER NO. 94848
BGE, INC.
1701 DIRECTORS BOULEVARD, SUITE 1000
AUSTIN, TX 78744

STATE OF TEXAS
TIMOTHY M. HOLLAND
94848
LICENSED
PROFESSIONAL ENGINEER

I, DION P. ALBERTSON, AM AUTHORIZED UNDER THE LAWS OF THE STATE OF TEXAS, TO PRACTICE THE PROFESSION OF LAND SURVEYING, AND DO HEREBY CERTIFY THAT THIS PLAT IS TRUE AND CORRECT, THAT IT WAS PREPARED FROM AN ACTUAL SURVEY OF THE PROPERTY MADE BY EMPLOYEES OF BGE, INC ON THE GROUND, AND THAT ALL NECESSARY SURVEY MONUMENTS ARE FOUND OR CORRECTLY SET UPON COMPLETION OF CONSTRUCTION AS SHOWN THEREON.

PRELIMINARY, THIS DOCUMENT SHALL NOT BE RECORDED FOR ANY PURPOSE AND SHALL NOT BE USED OR VIEWED OR RELIED UPON AS A FINAL SURVEY DOCUMENT

_____ _____
DION P. ALBERTSON, R.P.L.S. DATE
REGISTERED PROFESSIONAL LAND SURVEYOR NO. 4963
BGE, INC.
7330 SAN PEDRO AVE, SUITE 202
SAN ANTONIO, TEXAS 78216

CITY DEVELOPMENT SERVICES SIGNATURES:

THIS SUBDIVISION IS LOCATED WITHIN THE CITY LIMITS OF THE CITY OF HUTTO, THIS THE _____DAY OF _____, 20___, A.D

_____ _____
ASHBY GRUNDMAN, DEVELOPMENT SERVICES DIRECTOR DATE

THIS PLAT WAS APPROVED FOR RECORDING BY THE HUTTO CITY COUNCIL ON THE ON THIS THE _____DAY OF _____, 20___, A.D

_____ _____
MIKE SNYDER, MAYOR DATE

_____ _____
HOLLY NAGY, CITY SECRETARY DATE

GENERAL NOTES:

1. BEARING ORIENTATION IS BASED ON THE TEXAS STATE PLANE COORDINATE SYSTEM, CENTRAL ZONE 4203, NAD83. COMBINED SCALE FACTOR = 1.0001184402
2. NO BUILDING, FENCING, LANDSCAPING OR STRUCTURES ARE ALLOWED WITHIN ANY DRAINAGE OR WASTEWATER EASEMENT UNLESS EXPRESSLY PERMITTED BY THE CITY OF HUTTO.
3. BUILDING SETBACKS SHALL CONFORM TO THE DEVELOPMENT AGREEMENT BETWEEN STARLIGHT HOMES TEXAS, LLC, WMV LIMMER LOOP 23, LLC AND THE CITY OF HUTTO EXECUTED FEBRUARY 24, 2020.
4. A TEN (10) FOOT PUBLIC UTILITY EASEMENT (PUE) IS HEREBY DEDICATED ALONG AND ADJACENT TO ALL STREET SIDE PROPERTY LINES.
5. A FIVE (5) FOOT PUBLIC UTILITY EASEMENT (PUE) IS HEREBY DEDICATED ON EACH SIDE OF ALL REAR LOT LINES.
6. A THREE (3) FOOT PUBLIC UTILITY EASEMENT (PUE) IS HEREBY DEDICATED ON EACH SIDE OF ALL SIDE LOT LINES.
7. IF PARKING IS DESIRED ON BOTH SIDES OF THE STREET THEN THE STREETS MUST BE A MINIMUM OF 33 FEET WIDE. IF THE STREETS ARE LESS THAN 33 FEET IN WIDTH FIRE LANE SIGNAGE IS REQUIRED. (2018 IFC APPENDIX D SEC. 103.6 – D103.6.2)
8. NO LOT IN THIS SUBDIVISION SHALL BE OCCUPIED UNTIL CONNECTION IS MADE TO PUBLIC WATER AND WASTEWATER UTILITIES.
9. SIDEWALKS AND TREES SHALL BE PROVIDED ON BOTH SIDES OF ALL STREETS WITHIN THIS SUBDIVISION.
10. SIDEWALKS AND TREES SHALL BE PROVIDED ALONG ALL STREETS BOUNDING THIS SUBDIVISION.
11. ALL FENCING THAT IS NOT ON A PRIVATE LOT TO BE MAINTAINED BY THE HOA.
12. STREET LIGHTING SHALL BE PROVIDED BY THE DEVELOPER IN CONFORMANCE WITH THE UDC REQUIREMENTS, AS AMENDED.
13. THIS TRACT IS WITHIN WATER CCN SERVICE AREA 10970 AND WASTEWATER CCN SERVICE AREA 21053. WATER AND WASTEWATER WILL BE AVAILABLE THROUGH JONAH WATER SPECIAL UTILITY DISTRICT AFTER THE APPROPRIATE WATER AND WASTEWATER SYSTEMS ARE INSTALLED TO THIS SITE. JONAH WATER SPECIAL UTILITY DISTRICT ASSUMES NO OBLIGATIONS FOR INSTALLING ANY WATER AND WASTEWATER IMPROVEMENTS REQUIRED TO SERVE THIS SITE.
14. NO PORTION OF THIS TRACT IS ENCROACHED BY THE ULTIMATE 1% ANNUAL CHANCE FLOODPLAIN.
15. THE PROPERTY LIES IN UNSHADED ZONE "X" (AREAS DETERMINED TO BE OUTSIDE THE 0.2% ANNUAL CHANCE FLOODPLAIN) AS DELINEATED ON THE FLOOD INSURANCE RATE MAP FOR WILLIAMSON COUNTY, TEXAS AND INCORPORATED AREAS, MAP NUMBER 48491C0520F, REVISED DECEMBER 19, 2019.
16. IN ORDER TO PROMOTE DRAINAGE AWAY FROM A STRUCTURE, THE SLAB ELEVATIONS SHALL BE BUILT AT LEAST ONE (1) FOOT ABOVE THE SURROUNDING GROUND AND SHOULD BE GRADED AWAY FROM THE STRUCTURE AT A SLOPE OF 1/2" PER FOOT FOR A DISTANCE OF AT LEAST TEN (10) FEET.
17. ALL SUBDIVISION CONSTRUCTION SHALL CONFORM TO THE CITY OF HUTTO UNIFIED DEVELOPMENT CODE AS AMENDED, CONSTRUCTION STANDARDS, AND GENERALLY ACCEPTED ENGINEERING PRACTICES.
18. ON–SITE STORMWATER DETENTION FACILITIES WILL BE PROVIDED TO REDUCE POST–DEVELOPMENT PEAK RATES OF DISCHARGE OF THE 2, 10, 25 AND 100–YEAR STORM EVENTS.
19. ALL EASEMENTS ON PRIVATE PROPERTY SHALL BE MAINTAINED BY THE PROPERTY OWNER OR HIS OR HER ASSIGNS.
20. ALL DRAINAGE LOTS SHALL BE OWNED AND MAINTAINED BY THE HOMEOWNER'S ASSOCIATION.
21. MAXIMUM IMPERVIOUS COVER PER RESIDENTIAL LOT SHALL BE BASED ON THE DRAINAGE REPORT.

STATE OF TEXAS §
§ KNOW ALL MEN BY THESE PRESENTS:
COUNTY OF WILLIAMSON §

THAT I, NANCY RISTER, CLERK OF THE COUNTY COURT OF SAID COUNTY, DO HEREBY CERTIFY THAT THE FOREGOING INSTRUMENT IN WRITING, WITH ITS CERTIFICATION OF AUTHENTICATION, WAS FILED FOR RECORD IN MY OFFICE ON THE ____DAY OF _____, 20___ A.D., AT _____ O'CLOCK ___M. AND DULY RECORDED ON THE ____DAY OF _____, 20___ A.D., AT _____ O'CLOCK ___M. IN THE PLAT RECORDS OF SAID COUNTY, IN DOCUMENT NO. _____.

WITNESS MY HAND AND SEAL OF THE COUNTY COURT OF SAID COUNTY, AT MY OFFICE IN GEORGETOWN, TEXAS, THE DATE LAST ABOVE WRITTEN.

NANCY RISTER, CLERK, COUNTY COURT
WILLIAMSON COUNTY, TEXAS

BY: _____
DEPUTY

FINAL PLAT
WILCO RANCH PHASE 3 SECTION 2

A SUBDIVISION OF 12.530 ACRES OF LAND
LOCATED IN THE
JAMES SHELTON SURVEY, ABSTRACT NO. 560
WILLIAMSON COUNTY, TEXAS

BGE, Inc.
7330 San Pedro Ave., Suite 202
San Antonio, TX 78216
210-581-3600 • www.bgeinc.com
TBPELS Registration No. F-1046
TBPELS Licensed Surveying Firm No. 10194490

SHEET 3 OF 3

REV	DESCRIPTION	DATE	APR

DESIGNED BY: DAZ
REVIEWED BY: TMH
DRAWN BY: DAZ

BGE, INC.
1701 DIRECTORS BOULEVARD, SUITE 1000
AUSTIN, TX 78744
TBPE Registration No. F-1046
TEL: 512-879-0400 www.bgeinc.com

WILCO RANCH PHASE 3 SECTION 2
HUTTO, TEXAS

PLAT (2 OF 2)

SUBMITTAL DATE: 12-10-2020

STATE OF TEXAS
TIMOTHY M. HOLLAND
94848
LICENSED
PROFESSIONAL ENGINEER
8/2/2021

SHEET
3 OF 44

CITY OF HUTTO - GENERAL CONSTRUCTION NOTES
UPDATED MARCH 2019

1. THE CONTRACTOR IS TO CONTACT ONE OF THE FOLLOWING: TEXAS811 811 LONE STAR 1-800-669-8344 FOR LOCATION OF EXISTING FACILITIES AT LEAST 48 HOURS PRIOR TO COMMENCEMENT OF ANY CONSTRUCTION ACTIVITIES.

2. PRIOR TO ANY CONSTRUCTION, THE DESIGN ENGINEER SHALL CONVENE A PRECONSTRUCTION CONFERENCE BETWEEN THE CITY OF HUTTO, HIMSELF, THE CONTRACTOR, OTHER UTILITY COMPANIES, ANY AFFECTED PARTIES AND ANY OTHER ENTITY THE CITY OR ENGINEER MAY REQUIRE. IF CONSTRUCTION IS NOT STARTED ON THE SITE WITHIN 30 CALENDAR DAYS AFTER THE PRE-CONSTRUCTION CONFERENCE, THE ENGINEER SHALL CONVENE A NEW PRECONSTRUCTION CONFERENCE BETWEEN THE CITY OF HUTTO, HIMSELF, AND ALL THE ABOVE MENTIONED ENTITIES.

3. PRIOR TO ANY CHANGES TO THE CONSTRUCTION SITE, VIDEO OF THE SITE MUST BE TAKEN AND PROVIDED TO THE CITY BEFORE CONSTRUCTION COMMENCES.

4. ALL CONSTRUCTION OPERATIONS SHALL BE PERFORMED IN ACCORDANCE WITH CITY OF HUTTO ENGINEERING MANUAL AND STANDARD CONSTRUCTION SPECIFICATIONS AND DETAILS. IF CITY OF HUTTO ENGINEERING MANUAL UNAVAILABLE, OR NOT APPLICABLE, REFER TO TXDOT AND/OR CITY OF GEORGETOWN MANUAL, STANDARDS AND/OR SPECIFICATIONS.

5. ALL STORM SEWER BENDS AND WYES SHALL BE PREFABRICATED.

6. ALL STORM SEWER MAINS TO BE FIELD-TESTED FOR WATER TIGHTNESS NO SOONER THAN 30 DAYS AFTER TOTAL COMPLETION OF THE STORM SEWER LINES.

7. ALL STORM SEWER MAINS TO BE VIDEO TAPED BY CAMERA NO SOONER THAN 30 DAYS AFTER TOTAL COMPLETION OF THE STORM SEWER LINES. TWO DIGITAL COPIES SHALL BE SUPPLIED TO THE CITY BEFORE CLOSEOUT. ALL STORM SEWER CONDUITS WILL BE INSPECTED BY THE CITY BEFORE CITY ACCEPTANCE, VIDEO MUST SHOW DETAILS OF ALL IRREGULARITIES OR OFFSETS (MINIMUM 10 SECONDS OF VIDEO TIME).

8. ALL CONSTRUCTION OPERATIONS SHALL BE ACCOMPLISHED IN ACCORDANCE WITH APPLICABLE REGULATIONS OF THE U.S. OCCUPATIONAL SAFETY AND HEALTH ADMINISTRATION. OSHA STANDARDS MAY BE PURCHASED FROM THE GOVERNMENT PRINTING OFFICE; INFORMATION AND RELATED REFERENCE MATERIALS MAY BE PURCHASED FROM OSHA, 611 E. 6TH STREET, AUSTIN, TEXAS.

9. CONTRACTOR SHALL TAKE ALL DUE PRECAUTIONS TO PROTECT EXISTING FACILITIES FROM DAMAGE. ANY DAMAGE INCURRED TO EXISTING FACILITIES AS A RESULT OF CONSTRUCTION OPERATIONS TO BE REPAIRED IMMEDIATELY BY THE CONTRACTOR, AT NO ADDITIONAL COST TO OWNER.

10. CONTRACTOR TO GIVE NOTICE TO ALL AUTHORIZED INSPECTORS, SUPERINTENDENTS OR PERSONS IN CHARGE OF PUBLIC AND PRIVATE UTILITIES AFFECTED BY HIS OPERATIONS AT LEAST 48 HOURS PRIOR TO COMMENCEMENT OF WORK.

11. CONTRACTOR TO COMPLY WITH ALL APPLICABLE LOCAL, STATE, AND FEDERAL REQUIREMENTS REGARDING EXCESS AND WASTE MATERIAL, INCLUDING METHODS OF HANDLING AND DISPOSAL.

12. CONTRACTOR TO COORDINATE INTERRUPTIONS OF ALL UTILITIES AND SERVICES. ALL WORK TO BE IN ACCORDANCE WITH THE REQUIREMENTS OF THE APPLICABLE UTILITY COMPANY OR AGENCY INVOLVED.

13. WHEN UN-LOCATED OR INCORRECTLY LOCATED, A BREAK IN UTILITY LINES, OR OTHER UTILITIES AND SERVICES ARE ENCOUNTERED DURING SITE WORK OPERATIONS, CONTRACTOR SHALL NOTIFY THE APPLICABLE UTILITY COMPANY IMMEDIATELY TO OBTAIN PROCEDURE DIRECTIONS. CONTRACTOR SHALL COOPERATE WITH THE APPLICABLE UTILITY COMPANY IN MAINTAINING ACTIVE SERVICES IN OPERATION.

14. CONTRACTOR TO LOCATE, PROTECT, AND MAINTAIN BENCHMARKS, MONUMENTS, CONTROL POINTS AND PROJECT ENGINEERING REFERENCE POINTS. RE-ESTABLISH DISTURBED OR DESTROYED ITEMS BY REGISTERED PROFESSIONAL LAND SURVEYOR IN THE STATE OF TEXAS, AT NO ADDITIONAL COST TO OWNER.

15. WHEN CONSTRUCTION IS BEING CARRIED OUT WITHIN EASEMENTS, THE CONTRACTOR SHALL CONFINE HIS WORK TO WITHIN THE PERMANENT AND TEMPORARY EASEMENTS. PRIOR TO FINAL ACCEPTANCE, THE CONTRACTOR SHALL BE RESPONSIBLE FOR REMOVING ALL TRASH AND DEBRIS WITHIN THE PERMANENT AND TEMPORARY EASEMENTS. CLEAN-UP SHALL BE TO THE SATISFACTION OF THE ENGINEER.

16. THE CONTRACTOR AND THE ENGINEER SHALL KEEP ACCURATE RECORDS OF ALL CONSTRUCTION THAT DEVIATES FROM THE PLANS. ACCURATE "RECORD" DRAWINGS WILL BE PROVIDED TO THE CITY OF HUTTO, ALONG WITH A LETTER CERTIFICATION FROM A REGISTERED PROFESSIONAL ENGINEER LICENSED IN THE STATE OF TEXAS, STATING THAT SAID PROJECT HAS BEEN CONSTRUCTED IN ACCORDANCE WITH THESE PLANS, PRIOR TO THE OWNER BEING ISSUED A CERTIFICATION OF COMPLETION AND FINAL ACCEPTANCE. THESE "RECORD" DRAWINGS SHALL MEET WITH THE SATISFACTION OF THE ENGINEERING AND DEVELOPMENT SERVICES DEPARTMENTS PRIOR TO FINAL ACCEPTANCE.

17. CONTRACTOR SHALL STRIP SIX (6) INCHES OF TOPSOIL FROM ALL AREAS SUBJECT TO GRADE MODIFICATION. REMOVE ALL AREAS OF WEAK SOIL.

18. THE CONTRACTOR SHALL PROTECT ALL EXISTING FENCES. IN THE EVENT THAT A FENCE MUST BE REMOVED, THE CONTRACTOR SHALL REPLACE SAID FENCE OR PORTION THEREOF WITH THE SAME TYPE OF FENCING TO A QUALITY OF EQUAL OR BETTER THAN THE ORIGINAL FENCE.

19. UPON COMPLETION OF THE PROJECT, THE SITE(S) AS DEFINED HEREIN SHALL BE CLEANED OF ALL DEBRIS AND LEFT IN A NEAT AND PRESENTABLE CONDITION.

20. ALL ADJOINING PAVEMENT SECTIONS SHALL BE PROTECTED DURING ALL PHASES OF CONSTRUCTION AND ANY DAMAGES INCURRED DUE TO CONTRACTOR'S OPERATION SHALL BE REPAIRED AND/OR REPLACED AT THE CONTRACTOR'S EXPENSE.

21. CONTRACTOR TO CONTROL DUST CAUSED BY THE WORK AND COMPLY WITH POLLUTION CONTROL REGULATIONS OF GOVERNING AUTHORITIES (NO SEPARATE PAY).

22. TRAFFIC CONTROLS TO BE INSTALLED IN ACCORDANCE WITH THE CURRENT TXDOT MANUAL ON UNIFORM TRAFFIC CONTROL DEVICES AND TXDOT BARRICADE AND CONSTRUCTION STANDARDS.

23. REVEGETATE ALL DISTURBED AREAS UPON COMPLETION OF THE WORK PER CITY OF GEORGETOWN CONSTRUCTION STANDARDS.

24. CONTRACTOR TO EXERCISE CAUTION DURING CONSTRUCTION NEAR AND AROUND GAS LINES AND POWER LINES.

25. NO WORK IS TO BE PERFORMED BETWEEN THE HOURS OF 6:00 P.M. AND 7:00 A.M. ALL WORK REQUIRING CITY INSPECTION SHALL BE PERFORMED MONDAY THRU FRIDAY. THE CITY RESERVES THE RIGHT TO REQUIRE THE CONTRACTOR TO UNCOVER ALL WORK PERFORMED WITHOUT INSPECTION.

26. THE CONTRACTOR SHALL DETERMINE THE EXACT LOCATION VERTICALLY AND HORIZONTALLY OF ALL EXISTING UTILITIES PRIOR TO COMMENCING WORK, AND SHALL NOTIFY THE ENGINEER AND THE CITY IF THE EXISTING UTILITY LOCATION AND DEPTHS ARE DIFFERENT FROM WHAT IS SHOWN ON THE PLANS. THE CONTRACTOR AGREES TO BE FULLY RESPONSIBLE FOR ANY AND ALL DAMAGES WHICH MIGHT BE ASSOCIATED BY THE CONTRACTOR'S FAILURE TO EXACTLY LOCATE AND PRESERVE ANY AND ALL UNDERGROUND UTILITIES.

27. ALL FIRE LINES SHALL BE DUCTILE IRON.

28. DETECTABLE TAPE SHALL BE USED FOR ALL UNDERGROUND UTILITIES. TAPE MUST BE 12" WIDE 5 MIL WITH APPLICABLE COLOR AND LABEL.

29. CONTRACTOR WILL BE RESPONSIBLE FOR KEEPING ROADS AND DRIVES ADJACENT TO AND NEAR THE SITE FREE FROM SOIL, SEDIMENT AND DEBRIS. CONTRACTOR WILL NOT REMOVE SOIL, SEDIMENT OR DEBRIS FROM ANY AREA OR VEHICLE BY MEANS OF WATER, ONLY SHOVELING AND SWEEPING WILL BE ALLOWED. CONTRACTOR WILL BE RESPONSIBLE FOR DUST CONTROL FROM THE SITE.

30. THE CONTRACTOR SHALL BE RESPONSIBLE FOR ALL DAMAGE TO PRIVATE PROPERTY WHICH OCCURS AS A RESULT OF ANY PORTION OF THIS PROJECT. ANY DAMAGE TO PRIVATE PROPERTY SHALL BE REPAIRED TO EQUAL OR BETTER CONDITION. THE CONTRACTOR SHALL PAY AND/OR SETTLE WITH PRIVATE PROPERTY OWNER(S) FOR ALL COST RELATED TO DAMAGE. THE CITY WILL NOT PROVIDE SEPARATE PAY FOR REPAIR OF DAMAGES, REIMBURSEMENTS OR SETTLEMENTS.

CITY OF HUTTO - EROSION, SEDIMENTATION AND TREE PROTECTION NOTES
UPDATED AUGUST 2018

1. THE CONTRACTOR TO INSTALL AND MAINTAIN EROSION/SEDIMENTATION CONTROLS AND TREE/NATURAL AREA PROTECTIVE FENCING PRIOR TO ANY SITE PREPARATION WORK (CLEARING, GRUBBING, GRADING, OR EXCAVATION). CONTRACTOR TO REMOVE EROSION/SEDIMENTATION CONTROLS AT THE COMPLETION OF THE PROJECT AND GRASS RESTORATION.

2. THE PLACEMENT OF EROSION/SEDIMENTATION CONTROLS TO BE IN ACCORDANCE WITH THE APPROVED EROSION AND SEDIMENTATION CONTROL PLAN AND WATER POLLUTION ABATEMENT PLAN. DEVIATIONS FROM THE APPROVED PLAN MUST BE SUBMITTED TO AND APPROVED BY THE OWNER'S REPRESENTATIVE.

3. ALL PLANTING SHALL BE DONE BETWEEN MAY 1ST AND SEPTEMBER 15TH EXCEPT AS SPECIFICALLY AUTHORIZED IN WRITING. IF PLANTING IS AUTHORIZED TO BE DONE OUTSIDE THE DATE SPECIFIED, THE SEED SHALL BE PLANTED WITH THE ADDITION OF WINTER FESCUE (KENTUCKY 31) AT A RATE OF 100 LBS/ACRE. GRASS SHALL BE COMMON BERMUDA GRASS, HULLED, MINIMUM 82% PURE LIVE SEED. ALL GRASS SEED SHALL BE FREE FROM NOXIOUS WEED, GRADE "A" RECENT CROP, CLEANED AND TREATED WITH APPROPRIATE FUNGICIDE AT TIME OF MIXING. SEED SHALL BE FURNISHED IN SEALED, STANDARD CONTAINERS WITH DEALER'S GUARANTEED ANALYSIS.

4. ALL DISTURBED AREAS TO BE RESTORED AS NOTED IN THE WATER POLLUTION ABATEMENT PLAN.

5. THE PLANTED AREA TO BE IRRIGATED OR SPRINKLED IN A MANNER THAT WILL NOT ERODE THE TOPSOIL, BUT WILL SUFFICIENTLY SOAK THE SOIL TO A DEPTH OF FOUR INCHES (4"). THE IRRIGATION TO OCCUR AT 10-DAY INTERVALS DURING THE FIRST TWO MONTHS TO INSURE GERMINATION AND ESTABLISHMENT OF THE GRASS. RAINFALL OCCURRENCES OF ONE HALF AND INCH (1/2") OR GREATER TO POSTPONE THE WATER SCHEDULE ONE WEEK.

6. RESTORATION TO BE ACCEPTABLE WHEN THE GRASS HAS GROWN AT LEAST ONE AND ONE HALF INCHES (1.5") HIGH WITH 95% COVERAGE, PROVIDED NO BARE SPOTS LARGER THAN TWENTY-FIVE SQUARE FEET EXIST.

7. A MINIMUM OF FOUR INCHES (4") OF TOPSOIL TO BE PLACE IN ALL AREA DISTURBED BY CONSTRUCTION.

8. THE CONTRACTOR TO HYDRO MULCH OR SOD (AS SHOWN ON PLANS) ALL EXPOSED CUTS AND FILLS UPON COMPLETION OF CONSTRUCTION.

9. EROSION AND SEDIMENTATION CONTROLS TO BE INSTALLED OR MAINTAINED IN A MANNER WHICH DOES NOT RESULT IN SOIL BUILDUP WITHIN TREE DRIP LINE.

10. TO AVOID SOIL COMPACTION, CONTRACTOR SHALL NOT ALLOW VEHICULAR TRAFFIC, PARKING, OR STORAGE OF EQUIPMENT OR MATERIALS IN THE TREE DRIP LINE AREA.

11. WHERE A FENCE IS CLOSER THAN FOUR FEET (4') TO A TREE TRUCK, PROTECT THE TRUNK WITH STRAPPED-ON PLANKING TO A HEIGHT OF EIGHT FEET (8'), OR THE LIMITS OF LOWER BRANCHING, IN ADDITION TO THE FENCING.

12. TREES TO BE REMOVED IN A MANNER WHICH DOES NOT IMPACT TREES TO BE PRESERVED.

13. ANY ROOT EXPOSED BY THE CONSTRUCTION ACTIVITY TO BE PRUNED FLUSH WITH THE SOIL. BACKFILL ROOT AREA WITH GOOD QUALITY TOPSOIL AS SOON AS POSSIBLE. IF EXPOSED ROOT AREAS ARE NOT BACKFILLED WITHIN TWO DAYS, COVER THEM WITH ORGANIC MATTER IN A MANNER WHICH REDUCES SOIL TEMPERATURE AND MINIMIZES WATER LOSS DUE TO EVAPORATION.

14. CONTRACTOR TO PRUNE VEGETATION TO PROVIDE CLEARANCE FOR STRUCTURE, VEHICULAR TRAFFIC, AND EQUIPMENT BEFORE DAMAGE OCCURS (RIPPING OF BRANCHES, ETC.). ALL FINISHED PRUNING TO BE DONE ACCORDING TO RECOGNIZED, APPROVED STANDARDS OF THE INDUSTRY (REFERENCE THE "NATIONAL ARBORIST ASSOCIATION PRUNING STANDARDS FOR SHADE TREES").

15. THE CONTRACTOR IS TO INSPECT THE CONTROLS AT WEEKLY INTERVALS AND AFTER EVERY RAINFALL EXCEEDING ONE-QUARTER INCH (1/4") TO VERIFY THAT THEY HAVE NOT BEEN SIGNIFICANTLY DISTURBED. ANY ACCUMULATED SEDIMENT AFTER A SIGNIFICANT RAINFALL TO BE REMOVED AND PLACED IN THE OWNER DESIGNATED SPOIL DISPOSAL SITE. THE CONTRACTOR TO CONDUCT PERIODIC INSPECTIONS OF ALL EROSION/SEDIMENTATION CONTROLS AND TO MAKE ANY REPAIRS OR MODIFICATIONS NECESSARY TO ASSURE CONTINUED EFFECTIVE OPERATION OF EACH DEVICE.

16. WHERE THERE IS TO BE AN APPROVED GRADE CHANGE, IMPERMEABLE PAVING SURFACE, TREE WELL, OR OTHER SUCH SITE DEVELOPMENT IMMEDIATELY ADJACENT TO A PROTECTED TREE, ERECT THE FENCE APPROXIMATELY TWO TO FOUR FEET (2'-4') BEHIND THE AREA IN QUESTION.

17. NO ABOVE AND/OR BELOW GROUND TEMPORARY FUEL STORAGE FACILITIES TO BE STORED ON THE PROJECT SITE.

18. IF EROSION AND SEDIMENTATION CONTROL SYSTEMS ARE EXISTING FROM PRIOR CONTRACTS, OWNER'S REPRESENTATIVE AND THE CONTRACTOR TO EXAMINE THE EXISTING EROSION AND SEDIMENTATION CONTROL SYSTEMS FOR DAMAGE PRIOR TO CONSTRUCTION. ANY DAMAGE TO PREEXISTING EROSION AND SEDIMENTATION CONTROLS NOTED TO BE REPAIRED AT OWNER'S EXPENSE.

19. INTENTIONAL RELEASE OF VEHICLE OR EQUIPMENT FLUIDS ONTO THE GROUND IS NOT ALLOWED. CONTAMINATED SOIL RESULTING FROM ACCIDENTAL SPILL TO BE REMOVED AND DISPOSED OF PROPERLY.

CITY OF HUTTO - WASTEWATER NOTES
UPDATED AUGUST 2018

1. WASTEWATER SYSTEMS SHALL BE CONSTRUCTED IN ACCORDANCE WITH THE CITY OF HUTTO ENGINEERING DESIGN MANUAL, STANDARD SPECIFICATIONS AND STANDARD DETAILS.

2. NO CURVILINEAR WASTEWATER DESIGN/LAYOUT IS PERMITTED.

3. ALL WASTEWATER SERVICE, AND VALVE LOCATIONS SHALL BE APPROPRIATELY MARKED AS FOLLOWS:

   A. WASTEWATER SERVICE "S" ON TOP OF CURB

   B. VALVE "V" ON TOP OF CURB

4. TOOLS FOR MARKING CURBS SHALL BE PROVIDED BY THE CONTRACTOR. OTHER APPROPRIATE MEANS OF MARKING SERVICE AND VALVE LOCATIONS SHALL BE PROVIDED IN AREAS WITHOUT CURBS. SUCH MEANS OF MARKING SHALL BE SPECIFIED BY THE DESIGN ENGINEER AND APPROVED BY THE CITY OF HUTTO.

5. THRUST BLOCKING AND RESTRAINTS SHALL BE IN ACCORDANCE WITH CITY OF HUTTO STANDARD SPECIFICATIONS.

6. MANDREL TESTING WILL BE REQUIRED ON ALL WASTEWATER PIPE AS PER CITY OF HUTTO CONSTRUCTION SPECIFICATIONS.

7. ALL GRAVITY WASTEWATER MAINS TO BE FIELD-TESTED FOR WATER TIGHTNESS AND VIDEO TAPED BY CAMERA SO SOONER THAN 30-DAYS AFTER TOTAL COMPLETION OF WASTEWATER LINES. TWO DIGITAL COPIES SHALL BE PROVIDED TO THE CITY BEFORE CLOSEOUT.

8. HYDROSTATIC PRESSURE AND LEAKAGE TESTS SHALL BE PERFORMED ON ALL PRESSURE PIPELINES CARRYING WASTEWATER.

9. ALL MANHOLES SHALL BE TESTED FOR LEAKAGE SEPARATELY AND INDEPENDENTLY OF WASTEWATER LINES BY HYDROSTATIC EXFILTRATION TESTING OR OTHER CITY APPROVED METHOD PER CITY OF HUTTO CONSTRUCTION SPECIFICATIONS.

10. EXISTING MANHOLES SHALL BE TESTED FOR LEAKAGE PRIOR TO CORING OR ADJUSTMENT.

11. EXISTING MANHOLES SHALL HAVE ALL CONCRETE SURFACES CLEANED AND COATED PER CITY OF HUTTO WASTEWATER DETAILS AFTER CORING OR ADJUSTMENT.

12. ALL NEWLY INSTALLED PIPES AND RELATED PRODUCTS MUST CONFORM TO AMERICAN NATIONAL STANDARDS INSTITUTE / NATIONAL SANITATION FOUNDATION STANDARD 61 AND MUST BE CERTIFIED BY AN ORGANIZATION ACCREDITED BY ANSI.

13. PIPE MATERIAL FOR PRESSURE WASTEWATER MAINS SHALL BE PVC (AWWA C900, MIN. DR 14), OR DUCTILE IRON (AWWA C151, MIN. CLASS 350), DUCTILE IRON FOR PRESSURE WASTEWATER MAINS SHALL HAVE A CORROSION RESISTANT INTERIOR LINING ACCEPTABLE TO OWNER. PIPE MATERIAL FOR GRAVITY WASTEWATER MAINS SHALL BE PVC SDR-26, ASTM D-3034.

14. ALL PVC PIPE (ALL TYPES AND SDR/DR WALL THICKNESS TO BE USED) SHALL HAVE RUBBER GASKET EQUIPPED BELL AND SPIGOT JOINTS CONFORMING TO ASTM D-3212. THE GASKET MATERIAL SHALL CONFORM TO ASTM F-477. SOLVENT WELDED JOINTS WILL NOT BE APPROVED FOR THIS PROJECT.

15. ALL SANITARY SEWER FACILITIES AND POTABLE WATERLINES MUST BE INSTALLED SO AS TO PROVIDE A MINIMUM OF NINE FEET OF CLEARANCE IN ANY DIRECTION BETWEEN THEM. WHERE THE NINE FOOT SEPARATION DISTANCE CANNOT BE ACHIEVED, FOLLOW THESE SPECIAL PROCEDURES.

   A. IF A COLLECTION SYSTEM PIPE PARALLELS A PUBLIC WATER SUPPLY PIPE THE FOLLOWINGREQUIREMENTS APPLY:

   I. A COLLECTION SYSTEM PIPE MUST BE CONSTRUCTED OF CAST IRON, DUCTILE IRON, OR PVC MEETING ASTM SPECIFICATIONS WITH AT LEAST 150 POUNDS PER SQUARE INCH (PSI) PRESSURE RATING FOR BOTH THE PIPE AND JOINTS.

   II. VERTICAL SEPARATION MUST BE AT LEAST TWO FEET BETWEEN THE OUTSIDE DIAMETERS OF THE PIPES.

   III. HORIZONTAL SEPARATION MUST BE AT LEAST FOUR FEET BETWEEN OUTSIDE DIAMETERS OF THE PIPES.

   IV. COLLECTION SYSTEM PIPE MUST BE BELOW WATER SUPPLY PIPE.

   B. IF A COLLECTION SYSTEM PIPE CROSSES A PUBLIC WATER SUPPLY PIPE, THE FOLLOWING REQUIREMENTS APPLY:

   I. IF A COLLECTION SYSTEM IS CONSTRUCTED OF CAST IRON, DUCTILE IRON, OR PVC WITH A MINIMUM PRESSURE RATING OF 150 PSI, THE FOLLOWING REQUIREMENTS APPLY:

      a. A MINIMUM DISTANCE OF SIX (6) INCHES BETWEEN OUTSIDE DIAMETERS OF THE PIPES.

      b. A COLLECTION SYSTEM PIPE MUST BE BELOW A PUBLIC WATER SUPPLY PIPE.

      c. COLLECTION SYSTEM PIPE JOINTS MUST BE LOCATED AS FAR AS POSSIBLE FROM AN INTERSECTION WITH A PUBLIC WATER SUPPLY LINE.

   II. IF A COLLECTION SYSTEM CROSSES OVER A PUBLIC WATER SUPPLY PIPE, EACH PORTION OF A COLLECTION SYSTEM PIPE WITHIN NINE FEET OF A PUBLIC WATER SUPPLY PIPE MUST BE CONSTRUCTED OF CAST IRON, DUCTILE IRON, OR PVC PIPE WITH A PRESSURE RATING OF AT LEAST 150 PSI USING APPROPRIATE ADAPTERS.

16. AN INDEPENDENT QUALIFIED LAB, AT THE CONTRACTOR'S EXPENSE, SHALL PERFORM QUALITY TESTING FOR ALL WASTEWATER PIPE INSTALLED AND PRESSURE HYDROSTATIC TESTING OF ALL WATER LINES CONSTRUCTED. THE CONTRACTOR SHALL PROVIDE ALL EQUIPMENT (INCLUDING PUMPS AND GAGES), SUPPLIES, AND LABOR NECESSARY TO PERFORM THE TESTS. A CITY OF HUTTO CONSTRUCTION INSPECTOR MUST BE PRESENT FOR ALL TESTING.

17. THE CONTRACTOR SHALL PROVIDE THE DESIGN ENGINEER AND THE CITY NOT LESS THAN 24 HOURS NOTICE PRIOR TO PERFORMING STERILIZATION, QUALITY TESTING, OR PRESSURE TESTING.

18. THE CONTRACTOR SHALL NOT OPEN OR CLOSE ANY VALVES UNLESS AUTHORIZED BY THE CITY OF HUTTO.

19. ALL VALVE BOXES AND COVERS SHALL BE CAST IRON PER CITY OF HUTTO STANDARD DETAILS.

20. ALL MANHOLES SHALL BE CONCRETE WITH CAST IRON RING AND COVER. ALL MANHOLES LOCATED OUTSIDE OF PAVEMENT SHALL HAVE BOLTED AND GASKETED COVERS. CONCRETE MANHOLES TO BE COATED PER STANDARD DETAIL AND CONSTRUCTION SPECIFICATIONS. TAPPING OF FIBERGLASS MANHOLES SHALL NOT BE PERMITTED.

21. ALL WASTEWATER PIPING AND FITTINGS SHALL BE VIRGIN STOCK.

22. ALL MECHANICAL RESTRAINTS SHALL BE INSTALLED PER MANUFACTURER'S SPECIFICATIONS.

RECOMMENDATIONS - PAVEMENT THICKNESS SECTIONS

Street Classification	Subgrade Material	Hot Mix Asphaltic Concrete, in	Crushed Limestone Base, in	Lime Stabilized Subgrade, in
Local Street	Subgrade PI > 20	2.0	8	8
		2.0	16*	-
Residential Collectors	Subgrade PI > 20	2.0	12	8
		2.0	20*	-
Neighborhood Collectors	Subgrade PI > 20	2.0	16	8
		2.0	24	-

Notes:
1. As an alternative to lime, stabilize the subgrade using EMC Squared and EMS products in accordance with the manufacture Subgrade Specification (Section 02335). Compaction of the treated material shall be 95 percent of TxDOT TEX-114-E. Compaction should be performed with the moisture content of the soil adjusted to within 2 percent of optimum moisture content. This method has proven to be successful on previous sections. **
2. The surface clay must first be tested for sulfate reaction and a mix design should be completed to determine the proper lime content, lime type, mixing procedure and curing conditions required.
3. The subgrade improvement should be extended 3 feet beyond the back of the curb line.
4. These pavement thickness designs are intended to transfer the load from the anticipated traffic conditions.
5. The responsibility of assigning street classification to the streets in this project is left to the civil engineer.
6. If pavement designs other than those listed above are desired, please contact MLA Geotechnical.

* PAVEMENT DESIGN RECOMMENDATIONS HAVE BEEN REVISED PER CITY OF HUTTO REQUIREMENTS. SEE SHEET 33 FOR PAVEMENT CROSS SECTIONS.

**CITY WILL NOT ACCEPT CHEMICAL STABILIZER, EMC SQUARED AND EMS PRODUCTS FOR SUBGRADE TREATMENT. THE CITY ACCEPTS LIME STABILIZED SUBGRADE. CONTRACTOR TO CHECK WITH CITY INSPECTOR PRIOR TO MATERIAL SELECTION.

REV	DESCRIPTION	DATE	APR

DESIGNED BY: DAZ
REVIEWED BY: TMH
DRAWN BY: DAZ

BGE, INC.
1701 DIRECTORS BOULEVARD, SUITE 1000
AUSTIN, TX 78744
TBPE Registration No. F-1046
TEL: 512-879-0400 www.browngay.com

WILCO RANCH PHASE 3 SECTION 2
HUTTO, TEXAS

GENERAL NOTES (1 OF 2)

SUBMITTAL DATE: 12-10-2020

STATE OF TEXAS
TIMOTHY M. HOLLAND
94848
LICENSED
PROFESSIONAL ENGINEER
8/3/2021

SHEET
4 OF 44

G:\TXC\Projects\Ashton_Woods\8022-00-Wilco_Ranch_Ph3_Sec2\LDV01_CADD\01_Static\C-SP-NOTE-PH 3-SEC 2.dwg Layout: GENERAL NOTES (1 OF 2) Plotted: 8/3/2021 8:28:19 AM

TCEQ WATER DISTRIBUTION SYSTEM GENERAL CONSTRUCTION NOTES

1. THIS WATER DISTRIBUTION SYSTEM MUST BE CONSTRUCTED IN ACCORDANCE WITH THE CURRENT TEXAS COMMISSION ON ENVIRONMENTAL QUALITY (TCEQ) RULES AND REGULATIONS FOR PUBLIC WATER SYSTEMS 30 TEXAS ADMINISTRATIVE CODE (TAC) CHAPTER 290 SUBCHAPTER D. WHEN CONFLICTS ARE NOTED WITH LOCAL STANDARDS, THE MORE STRINGENT REQUIREMENT SHALL BE APPLIED. AT A MINIMUM, CONSTRUCTION FOR PUBLIC WATER SYSTEMS MUST ALWAYS MEET TCEQ'S "RULES AND REGULATIONS FOR PUBLIC WATER SYSTEMS."

2. ALL NEWLY INSTALLED PIPES AND RELATED PRODUCTS MUST CONFORM TO AMERICAN NATIONAL STANDARDS INSTITUTE (ANSI)/NSF INTERNATIONAL STANDARD 61 AND MUST BE CERTIFIED BY AN ORGANIZATION ACCREDITED BY ANSI [§290.44(A)(1)].

3. PLASTIC PIPE FOR USE IN PUBLIC WATER SYSTEMS MUST BEAR THE NSF INTERNATIONAL SEAL OF APPROVAL (NSF-PW) AND HAVE AN ASTM DESIGN PRESSURE RATING OF AT LEAST 150 PSI OR A STANDARD DIMENSION RATIO OF 26 OR LESS [§290.44(A)(2)].

4. NO PIPE WHICH HAS BEEN USED FOR ANY PURPOSE OTHER THAN THE CONVEYANCE OF DRINKING WATER SHALL BE ACCEPTED OR RELOCATED FOR USE IN ANY PUBLIC DRINKING WATER SUPPLY [§290.44(A)(3)].

5. ALL WATER LINE CROSSINGS OF WASTEWATER MAINS SHALL BE PERPENDICULAR [§290.44(E)(4)(B)].

6. WATER TRANSMISSION AND DISTRIBUTION LINES SHALL BE INSTALLED IN ACCORDANCE WITH THE MANUFACTURER'S INSTRUCTIONS. HOWEVER, THE TOP OF THE WATER LINE MUST BE LOCATED BELOW THE FROST LINE AND IN NO CASE SHALL THE TOP OF THE WATER LINE BE LESS THAN 24 INCHES BELOW GROUND SURFACE [§290.44(A)(4)].

7. THE MAXIMUM ALLOWABLE LEAD CONTENT OF PIPES, PIPE FITTINGS, PLUMBING FITTINGS, AND FIXTURES IS 0.25 PERCENT [§290.44(B)].

8. THE CONTRACTOR SHALL INSTALL APPROPRIATE AIR RELEASE DEVICES WITH VENT OPENINGS TO THE ATMOSPHERE COVERED WITH 16-MESH OR FINER, CORROSION RESISTANT SCREENING MATERIAL OR AN ACCEPTABLE EQUIVALENT [§290.44(D)(1)].

9. THE CONTRACTOR SHALL NOT PLACE THE PIPE IN WATER OR WHERE IT CAN BE FLOODED WITH WATER OR SEWAGE DURING ITS STORAGE OR INSTALLATION [§290.44(F)(1)].

10. WHEN WATERLINES ARE LAID UNDER ANY FLOWING OR INTERMITTENT STREAM OR SEMI-PERMANENT BODY OF WATER THE WATERLINE SHALL BE INSTALLED IN A SEPARATE WATERTIGHT PIPE ENCASEMENT. VALVES MUST BE PROVIDED ON EACH SIDE OF THE CROSSING WITH FACILITIES TO ALLOW THE UNDERWATER PORTION OF THE SYSTEM TO BE ISOLATED AND TESTED [§290.44(F)(2)].

11. PURSUANT TO 30 TAC §290.44(A)(5), THE HYDROSTATIC LEAKAGE RATE SHALL NOT EXCEED THE AMOUNT ALLOWED OR RECOMMENDED BY THE MOST CURRENT AWWA FORMULAS FOR PVC PIPE, CAST IRON AND DUCTILE IRON PIPE. INCLUDE THE FORMULAS IN THE NOTES ON THE PLANS. O THE HYDROSTATIC LEAKAGE RATE FOR POLYVINYL CHLORIDE (PVC) PIPE AND APPURTENANCES SHALL NOT EXCEED THE AMOUNT ALLOWED OR RECOMMENDED BY FORMULAS IN AMERICA WATER WORKS ASSOCIATION (AWWA) C-605 AS REQUIRED IN 30 TAC §290.44(A)(5). PLEASE ENSURE THAT

   THE FORMULA FOR THIS CALCULATION IS CORRECT AND MOST CURRENT FORMULA IS IN USE;

   $$Q = \frac{LD\sqrt{P}}{148{,}000}$$

   WHERE:
   Q = THE QUANTITY OF MAKEUP WATER IN GALLONS PER HOUR,
   L = THE LENGTH OF THE PIPE SECTION BEING TESTED, IN FEET,
   D= THE NOMINAL DIAMETER OF THE PIPE IN INCHES, AND
   P = THE AVERAGE TEST PRESSURE DURING THE HYDROSTATIC TEST IN POUNDS PER SQUARE INCH (PSI).

   THE HYDROSTATIC LEAKAGE RATE FOR DUCTILE IRON (DI) PIPE AND APPURTENANCES SHALL NOT EXCEED THE AMOUNT ALLOWED OR RECOMMENDED BY FORMULAS IN AMERICA WATER WORKS ASSOCIATION (AWWA) C-600 AS REQUIRED IN 30 TAC §290.44(A)(5). PLEASE ENSURE THAT THE FORMULA FOR THIS CALCULATION IS CORRECT AND MOST CURRENT FORMULA IS IN USE;

   $$L = \frac{SD\sqrt{P}}{148{,}000}$$

   WHERE:
   L = THE QUANTITY OF MAKEUP WATER IN GALLONS PER HOUR,
   S = THE LENGTH OF THE PIPE SECTION BEING TESTED, IN FEET,
   D = THE NOMINAL DIAMETER OF THE PIPE IN INCHES, AND
   P = THE AVERAGE TEST PRESSURE DURING THE HYDROSTATIC TEST IN POUNDS PER SQUARE INCH (PSI).

12. THE CONTRACTOR SHALL MAINTAIN A MINIMUM SEPARATION DISTANCE IN ALL DIRECTIONS OF NINE FEET BETWEEN THE PROPOSED WATERLINE AND WASTEWATER COLLECTION FACILITIES INCLUDING MANHOLES. IF THIS DISTANCE CANNOT BE MAINTAINED, THE CONTRACTOR MUST IMMEDIATELY NOTIFY THE PROJECT ENGINEER FOR FURTHER DIRECTION. SEPARATION DISTANCES, INSTALLATION METHODS, AND MATERIALS UTILIZED MUST MEET §290.44(E)(1)-(4).

13. THE SEPARATION DISTANCE FROM A POTABLE WATERLINE TO A WASTEWATER MAIN OR LATERAL MANHOLE OR CLEANOUT SHALL BE A MINIMUM OF NINE FEET. WHERE THE NINE-FOOT SEPARATION DISTANCE CANNOT BE ACHIEVED, THE POTABLE WATERLINE SHALL BE ENCASED IN A JOINT OF AT LEAST 150 PSI PRESSURE CLASS PIPE AT LEAST 18 FEET LONG AND TWO NOMINAL SIZES LARGER THAN THE NEW CONVEYANCE. THE SPACE AROUND THE CARRIER PIPE SHALL BE SUPPORTED AT FIVE-FOOT INTERVALS WITH SPACERS OR BE FILLED TO THE SPRINGLINE WITH WASHED SAND. THE ENCASEMENT PIPE SHALL BE CENTERED ON THE CROSSING AND BOTH ENDS SEALED WITH CEMENT GROUT OR MANUFACTURED SEALANT [§290.44(E)(5)].

14. FIRE HYDRANTS SHALL NOT BE INSTALLED WITHIN NINE FEET VERTICALLY OR HORIZONTALLY OF ANY WASTEWATER LINE, WASTEWATER LATERAL, OR WASTEWATER SERVICE LINE REGARDLESS OF CONSTRUCTION [§290.44(E)(6)].

15. SUCTION MAINS TO PUMPING EQUIPMENT SHALL NOT CROSS WASTEWATER MAINS, WASTEWATER LATERALS, OR WASTEWATER SERVICE LINES. RAW WATER SUPPLY LINES SHALL NOT BE INSTALLED WITHIN FIVE FEET OF ANY TILE OR CONCRETE WASTEWATER MAIN, WASTEWATER LATERAL, OR WASTEWATER SERVICE LINE [§290.44(E)(7)].
16. WATERLINES SHALL NOT BE INSTALLED CLOSER THAN TEN FEET TO SEPTIC TANK DRAINFIELDS [§290.44(E)(8)].

17. THE CONTRACTOR SHALL DISINFECT THE NEW WATERLINES IN ACCORDANCE WITH AWWA STANDARD C-651-14OR MOST RECENT, THEN FLUSH AND SAMPLE THE LINES BEFORE BEING PLACED INTO SERVICE. SAMPLES SHALL BE COLLECTED FOR MICROBIOLOGICAL ANALYSIS TO CHECK THE EFFECTIVENESS OF THE DISINFECTION PROCEDURE WHICH SHALL BE REPEATED IF CONTAMINATION PERSISTS. A MINIMUM OF ONE SAMPLE FOR EACH 1,000 FEET OF COMPLETED WATERLINE WILL BE REQUIRED OR AT THE NEXT AVAILABLE SAMPLING POINT BEYOND 1,000 FEET AS DESIGNATED BY THE DESIGN ENGINEER [§290.44(F)(3)].

18. DECHLORINATION OF DISINFECTING WATER SHALL BE IN STRICT ACCORDANCE WITH CURRENT AWWA STANDARD C655-09 OR MOST RECENT.

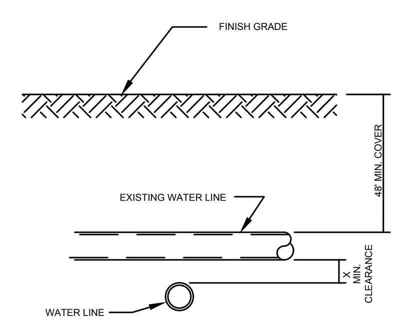

NEW SEWER LINE UNDER EXISTING WATER LINE

NOTES:
1. WHEN SEWER PIPE IS NOT PRESSURE-RATED, X = 2 FEET AND CEMENT-STABILIZED SAND (AT LEAST 2 80-LB BAGS CEMENT PER CU. YD. OF SAND) SHALL BE USED AT LEAST 9' OUT FROM THE CROSSING IN BOTH DIRECTIONS HORIZONTALLY AND VERTICALLY FROM ONE QUARTER OF A SEWER PIPE DIAMETER BELOW THE CENTERLINE UP TO ONE DIAMETER ABOVE THE TOP OF THE SEWER PIPE (MIN. 12").
2. WHEN SEWER PIPE IS RATED FOR A MINIMUM PRESSURE OF 150 PSI, X = 6 INCHES

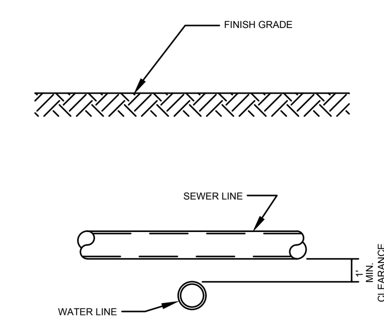

WATER LINE UNDER SEWER LINE

NOTES:
1. SEWER PIPE MUST BE DUCTILE IRON OR STEEL PIPE WITH MECHANICAL OR WELDED JOINTS, OR MUST BE ENCASED IN 18' OF 115 PSI @ 5% DEFLECTION STIFFNESS PIPE, 2 NOMINAL SIZES LARGER THAN THE SEWER PIPE, SUPPORTED WITH SPACERS EVERY 5' OR FILLED TO THE SPRING LINE WITH WASHED SAND, AND CENTERED ON THE CROSSING WITH BOTH ENDS SEALED WITH WATERTIGHT, NON-SHRINK CEMENT GROUT OR MANUFACTURED WATERTIGHT SEALS.
2. BOTH WATER AND SEWER PIPES MUST PASS A PRESSURE AND LEAKAGE TEST AS SPECIFIED IN AWWA C600 STANDARDS

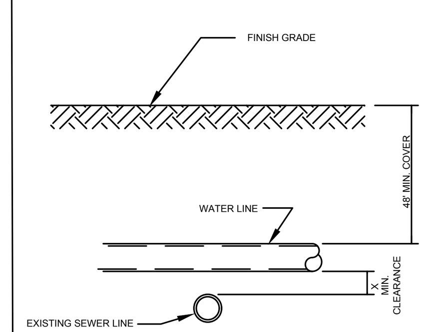

NEW WATER LINE OVER EXISTING SEWER LINE

NOTES:
1. WHEN SEWER PIPE IS NOT PRESSURE-RATED X = 2 FEET. WHEN SEWER PIPE IS RATED FOR A MINIMUM PRESSURE OF 150 PSI, X = 6 INCHES.
2. IF SEWER LINE IS LEAKING, IT MUST BE REPLACED WITH PIPE RATED FOR A MINIMUM PRESSURE OF 150PSI AT LEAST 9 FEET OUT FROM THE POINT OF CROSSING IN BOTH DIRECTIONS.

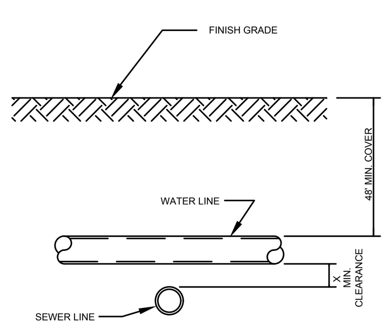

NEW SEWER LINE UNDER NEW WATER LINE

NOTES:
1. SEWER PIPE MINIMUM STIFFNESS IS 115 PSI @ 5% DEFLECTION
2. WHEN SEWER PIPE IS NOT PRESSURE-RATED X = 2 FEET. WHEN SEWER PIPE IS RATED FOR A MINIMUM PRESSURE OF 150 PSI, X=6 INCHES.
3. SEWER PIPE SHALL INCLUDE CEMENT STABILIZED SAND (AT LEAST 2.5 BAGS CEMENT PER CU. YD. OF MIXTURE) FOR THE TOTAL LENGTH OF ONE PIPE SEGMENT PLUS 12" BEYOND THE JOINT ON EACH END HORIZONTALLY AND VERTICALLY FROM 4" BELOW THE SEWER PIPE UP TO 6" ABOVE THE SEWER PIPE.

NOTES:
1. PER TCEQ § 217.53 AND § 290.44, WATER AND SEWER LINES MUST BE SEPARATED BY 9 FEET IN ALL DIRECTIONS, THE PIPES MUST BE INSTALLED IN SEPARATE DITCHES, AND THERE CAN BE NO PHYSICAL CONNECTIONS BETWEEN THEM.
2. ALSO PER TCEQ § 217.53 AND § 290.44, SEPARATION DISTANCES LESS THAN 9' ARE PERMISSIBLE IF PERFORMED PER THE DRAIWING BELOW:

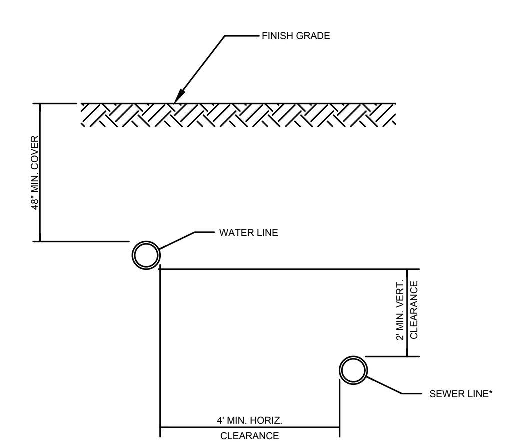

* FOR WATER LINE INSTALLATIONS NEAR EXISTING SEWER LINES, A TEXAS-LICENSED PROFESSIONAL ENGINEER MUST VERIFY THAT THE SEWER LINE IS NOT LEAKING, AND EVERY EFFORT SHALL BE EXERTED NOT TO DISTURB THE BEDDING AND BACKFILL OF THE EXISTING SEWER LINE. IF IT IS NOT POSSIBLE TO VERIFY THE LEAKS, THE SEWER LINE MUST BE REPLACED WITH AT LEAST 150 PSI PRESSURE RATED PIPE.

PARALLEL SEWER/WATER LINES

TRENCH SAFETY NOTES:
1. IN ACCORDANCE WITH THE LAWS OF THE STATE OF TEXAS AND THE U. S. OCCUPATIONAL SAFETY AND HEALTH ADMINISTRATION REGULATIONS, ALL TRENCHES OVER 5 FEET IN DEPTH IN EITHER HARD AND COMPACT OR SOFT AND UNSTABLE SOIL SHALL BE SLOPED, SHORED, SHEETED, BRACED OR OTHERWISE SUPPORTED. FURTHERMORE, ALL TRENCHES LESS THAN 5 FEET IN DEPTH SHALL ALSO BE EFFECTIVELY PROTECTED WHEN HAZARDOUS GROUND MOVEMENT MAY BE EXPECTED. TRENCH SAFETY SYSTEMS TO BE UTILIZED FOR THIS PROJECT WILL BE PROVIDED BY THE CONTRACTOR.
2. IN ACCORDANCE WITH THE U. S. OCCUPATIONAL SAFETY AND HEALTH ADMINISTRATION REGULATIONS, WHEN PERSONS ARE IN TRENCHES 4-FEET DEEP OR MORE, ADEQUATE MEANS OF EXIT, SUCH AS A LADDER OR STEPS, MUST BE PROVIDED AND LOCATED SO AS TO REQUIRE NO MORE THAN 25 FEET OF LATERAL TRAVEL.
3. IF TRENCH SAFETY SYSTEM DETAILS WERE NOT PROVIDED IN THE PLANS BECAUSE TRENCHES WERE ANTICIPATED TO BE LESS THAN 5 FEET IN DEPTH AND DURING CONSTRUCTION IT IS FOUND THAT TRENCHES ARE IN FACT 5 FEET OR MORE IN DEPTH OR TRENCHES LESS THAN 5 FEET IN DEPTH ARE IN AN AREA WHERE HAZARDOUS GROUND MOVEMENT IS EXPECTED, ALL CONSTRUCTION SHALL CEASE, THE TRENCHED AREA SHALL BE BARRICADED AND THE ENGINEER NOTIFIED IMMEDIATELY. CONSTRUCTION SHALL NOT RESUME UNTIL APPROPRIATE TRENCH SAFETY SYSTEM DETAILS, AS DESIGNED BY A PROFESSIONAL ENGINEER, ARE RETAINED AND COPIES SUBMITTED TO THE CITY OF HUTTO.

FIRE DEPARTMENT:
1. AN ALL WEATHER DRIVING SURFACE MUST BE INSTALLED IN LOCATIONS SHOWN ON THE SITE PLAN TO BE FIRE LANES, PRIOR TO ANY BUILDING CONSTRUCTION BEYOND THE FOUNDATION PHASE.
2. THE FOUR AND ONE HALF-INCH STEAMER OPENING MUST FACE THE DRIVEWAY OR STREET WITH THREE TO SIX FEET SET BACKS FROM THE CURB LINE(S). NO OBSTRUCTION IS ALLOWED WITHIN THREE (3) FEET OF ANY FIRE HYDRANT, AND THE FOUR AND ONE HALF OPENING MUST BE TOTALLY UNOBSTRUCTED FROM THE STREET/DRIVEWAY.
3. ALL PERVIOUS/DECORATIVE PAVEMENTS SHALL BE ENGINEERED AND INSTALLED FOR 75,000 LB. LIVE-VEHICLE LOADS. THE DISTRICT MUST APPROVE ANY PERVIOUS/DECORATIVE PAVING WITHIN 100 FT. OF ANY BUILDING.
4. COMMERCIAL DUMPSTERS AND CONTAINERS WITH AN INDIVIDUAL CAPACITY OF 1.5 CUBIC YARDS OR GREATER SHALL NOT BE STORED OR PLACED WITHIN TEN- (10) FT. OF OPENINGS, COMBUSTIBLE WALLS, OR COMBUSTIBLE EAVE LINES.
5. VERTICAL CLEARANCE REQUIRED FOR FIRE APPARATUS IS 13 FEET, 6 INCHES, FOR THE FULL 25 FEET WIDTH OF ALL ACCESS DRIVES AND ROUTES FOR INTERNAL CIRCULATION. DEAD-END FIRE APPARATUS ACCESS ROADS IN EXCESS OF 150 FEET IN LENGTH SHALL BE PROVIDED WITH APPROVED PROVISIONS FOR THE TURNING AROUND OF FIRE APPARATUS.
6. FIRE LANES SHALL BE STENCILED "FIRE LANE-TOW AWAY ZONE" IN WHITE LETTERS THREE INCHES TALL, AT INTERVALS NOT TO EXCEEDING 35 FEET. CURBS ALONG THE FIRE LANES SHALL BE PAINTED RED IN AREAS AS INDICATED ON THE SITE PLAN. WHERE NO CURB AND GUTTER EXISTS, FIRE APPARATUS ACCESS ROADS SHALL BE MARKED WITH PERMANENT FIRE LANE- TOW AWAY ZONE SIGNS AT INTERVALS NOT EXCEEDING 50 FEET. SIGNS SHALL HAVE A MINIMUM DIMENSION OF 12 INCHES WIDE AND 18 INCHES HIGH AND HAVE RED LETTERS ON A WHITE REFLECTIVE BACKGROUND. SIGNS SHALL BE POSTED ON ONE SIDE OR BOTH SIDES OF THE FIRE APPARATUS ROAD AS REQUIRED BY LOCAL AMENDMENTS.

GENERAL NOTES:
1. UNLESS OTHERWISE LISTED HEREIN, ALL CONSTRUCTION SHALL BE IN ACCORDANCE WITH THE CITY OF GEORGETOWN STANDARD SPECIFICATIONS, WHICH ARE HEREBY REFERENCED FOR THIS CONSTRUCTION PLAN SET.
2. WHERE A STATE OR LOCAL MUNICIPAL STANDARD DETAIL DUPLICATES A DETAIL SHOWN IN THE PLANS, THE MORE STRINGENT DETAIL, AS DETERMINED BY THE REVIEWING AGENCY, SHALL APPLY.
3. ANY EXISTING UTILITIES, PAVEMENT, CURBS, SIDEWALKS, STRUCTURES, TREES, ETC., THAT ARE DAMAGED OR REMOVED SHALL BE REPAIRED OR REPLACED TO EXISTING OR BETTER CONDITION BY THE CONTRACTOR AT NO COST TO THE OWNER.

REV	DESCRIPTION	DATE	APR

DESIGNED BY: DAZ
REVIEWED BY: TMH
DRAWN BY: DAZ

BGE, INC.
1701 DIRECTORS BOULEVARD, SUITE 1000
AUSTIN, TX 78744
TBPE Registration No. F-1046
TEL: 512-879-0400 www.browngay.com

WILCO RANCH PHASE 3 SECTION 2
HUTTO, TEXAS

GENERAL NOTES (2 OF 2)

SUBMITTAL DATE: 12-10-2020

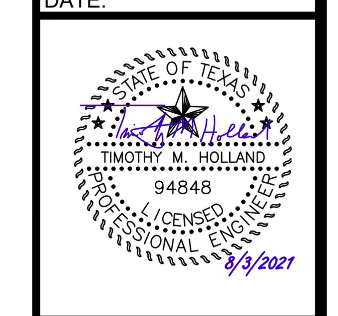

SHEET
5 OF 44

G:\TXC\Projects\Ashton_Woods\8022-00-Wilco_Ranch_Ph3_Sec2\LD\01_CADD\01_Shts\C-SP-NOTE-PH 3-SEC 2.dwg Layout: GENERAL NOTES (2 OF 2) Plotted: 8/3/2021 8:28:25 AM

N

0 25' 50' 100'
SCALE: 1" = 50'

LEGEND

- LOC — LIMITS OF CONSTRUCTION
- SF — SILT FENCE
- SF* — PHASE II SILT FENCE (SEE NOTE 21 THIS SHEET)
- 100 — ENGINEERED 100YR FLOODPLAIN
- FEMA — FEMA 100YR FLOODPLAIN
- WATERWAY SETBACK
- XXX — EXISTING MAJOR CONTOURS
- EXISTING MINOR CONTOURS
- XXX — PROPOSED MAJOR CONTOURS
- PROPOSED MINOR CONTOURS
- INLET PROTECTION
- ROCK BERM
- CONSTRUCTION ENTRANCE
- STAGING AND SPOILS AREA
- FLOW DIRECTION

1. IF A CONCRETE WASHOUT IS TO BE UTILIZED DURING CONSTRUCTION THE LOCATION WILL BE DETERMINED ONCE CONSTRUCTION HAS BEGUN AND WILL BE PROPERLY NOTATED ON THE SITE MAP AT THAT TIME.
2. ALL REQUIRED NOTICES AND PERMITS MUST BE PLACED IN A HIGHLY VISIBLE LOCATION ONSITE BEFORE THE COMMENCEMENT OF CONSTRUCTION.
3. ALL EROSION AND SEDIMENTATION CONTROLS (ESC) MUST BE INSTALLED PRIOR TO ANY DISTURBANCE TO THE PROJECT SITE.
4. INSTALL SILT FENCE ACCORDINGLY FOR RUN-ON DIVERSION OR OFFSITE SEDIMENT CONTROL DEPENDING ON UP OR DOWN SLOPE, FACING POST SIDE ON THE DOWN GRADIENT SIDE.
5. ALL ESC USED ONSITE MUST BE REGULARLY MONITORED AND MAINTAINED AS NEEDED.
6. MUD AND OR DIRT TRACKED INTO THE ROADWAY MUST BE IMMEDIATELY REMOVED UPON DISCOVERY.
7. EXCESS MATERIALS THAT WILL BE TRANSPORTED TO AN OFFSITE LOCATION MUST HAVE THAT LOCATION CLEARED BY CITY INSPECTOR.
8. LOOSE TRASH AND DEBRIS MUST BE DISPOSED OF PROPERLY ONSITE.
9. CONTRACTOR SHALL MAINTAIN AND UTILIZE DUST CONTROL FOR THE DURATION OF THE PROJECT.
10. THE STABILIZED CONSTRUCTION ENTRANCE SHALL BE MAINTAINED IN A CONDITION THAT PREVENTS TRACKING ONTO THE PUBLIC ROADWAY ON AN ONGOING/REGULAR BASIS.
11. INITIATE TEMPORARY STABILIZATION WHEN CONSTRUCTION CEASES IN A DISTURBED AREA FOR 14 DAYS.
12. INITIATE PERMANENT STABILIZATION IMMEDIATELY ONCE WORK HAS CEASED AND FINAL GRADE HAS BEEN ACHIEVED.
13. ALL DISTURBED/BARE AREAS WILL REQUIRE PERMANENT STABILIZATION BEFORE FINAL ACCEPTANCE CAN BE ACHIEVED. AVOID DISTURBING AREAS OF THE PROJECT THAT ARE NOT NECESSARY FOR CONSTRUCTION.
14. CITY INSPECTOR MAY REQUEST ADDITIONAL CONTROLS BE INSTALLED ONSITE AS NEEDED.
15. CONTRACTOR MUST REMOVE SEDIMENT FROM ALL STORM SEWER INLET BOXES, LINES, PIPES AND CULVERTS BEFORE CONDITIONAL/FINAL ACCEPTANCE CAN OBTAINED.
16. CERTIFIED SWP3 INSPECTORS TO CONDUCT SWP3 INSPECTIONS AND REPORTING ON ALL PROJECTS WITH ONE ACRE OF DISTURBANCE AND LARGER.
17. PERMITTEE SHALL INSPECT ALL INLET PROTECTION DEVICES AS PART OF THE WEEKLY SWP3 REPORT, UPON RECEIVING A FORECAST CALLING FOR A RAIN EVENT FOR AN EXTENDED PERIOD, MODIFICATION OF INLET PROTECTION SHOULD BE MADE TO PREVENT FLOODING OR PONDING OF WATER IF TRAFFIC OR PROPERTY CONCERNS ARISE.
18. INLET PROTECTION SHALL BE INSTALLED IMMEDIATELY FOLLOWING COMPLETION OF EACH INLET.
19. THE TOP OF ROCK BERMS NEAR THE END OF A HEADWALL SHALL BE FAR ENOUGH AWAY AND LOWER THEN THE FLOWLINE OF THE INFLOW PIPE TO PREVENT SEDIMENT BACK-UP WITHIN THE PIPE.
20. THE PROPOSED ROCK BERM IS TEMPORARY AND SHALL BE REMOVED AFTER PROJECT ACCEPTANCE

REV	DESCRIPTION	DATE	APR
	Record Drawing		

DESIGNED BY: DAZ
REVIEWED BY: TMH
DRAWN BY: DAZ

BGE
BGE, INC.
1701 DIRECTORS BOULEVARD, SUITE 1000
AUSTIN, TX 78744
TBPE Registration No. F-1046
TEL: 512-879-0400 www.browngay.com

WILCO RANCH PHASE 3 SECTION 2
HUTTO, TEXAS

EROSION CONTROL PLAN

SUBMITTAL DATE: 12-10-2020

STATE OF TEXAS
TIMOTHY M. HOLLAND
94848
LICENSED
PROFESSIONAL ENGINEER
9/3/2021

SHEET
6 OF 44

G:\TXC\Projects\Ashton_Woods\8022-00-Wilco_Ranch_Ph3_Sec2\LD\01_CADD\01_Sht\C-SP-EROS-OVAL-PH 3-SEC 2.dwg Layout: EROSION CONTROL PLAN Plotted: 8/3/2021 8:28:25 AM

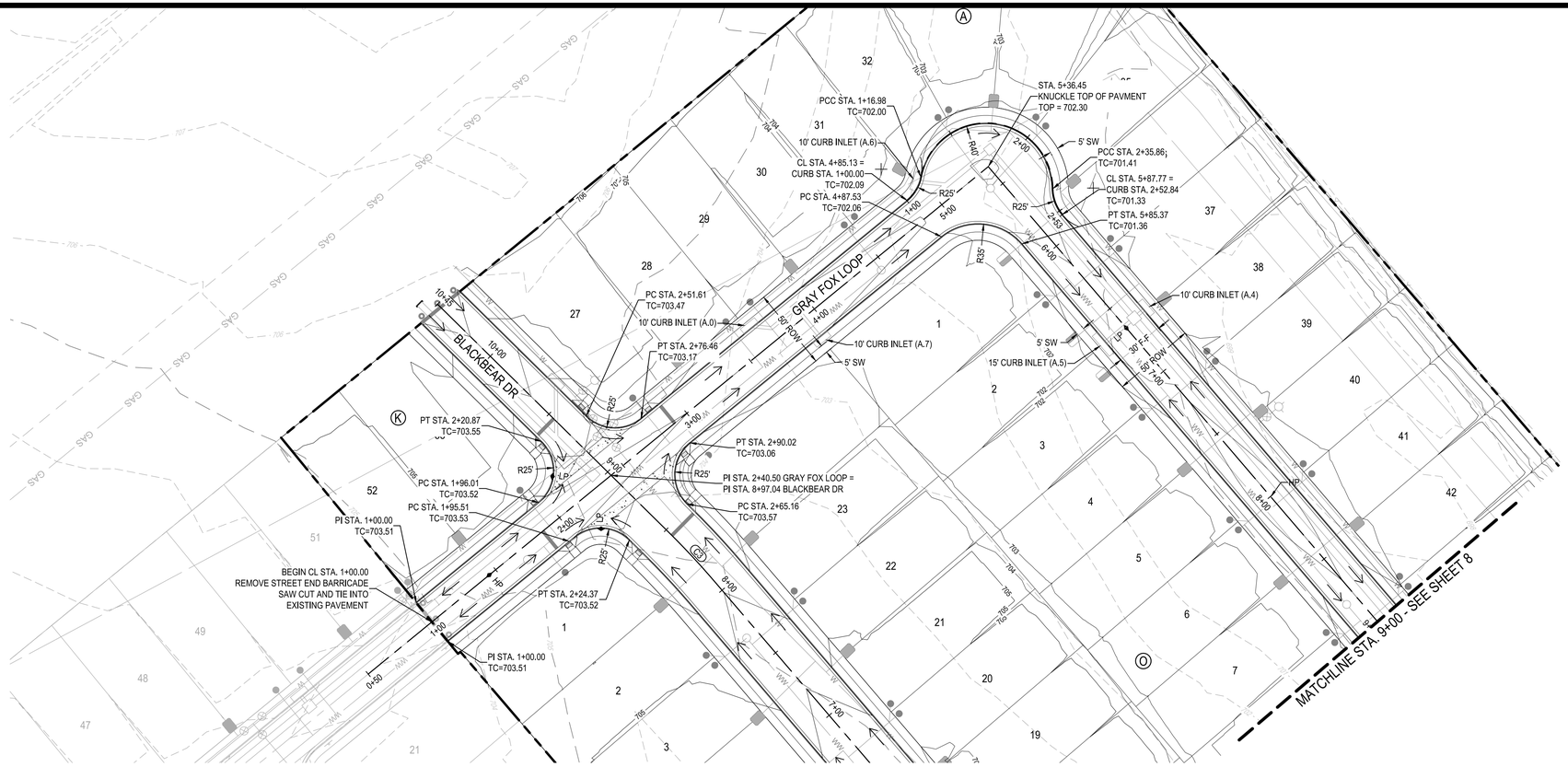

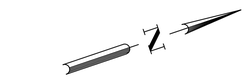

0 20' 40' 80'
SCALE: 1" = 40'

LEGEND

- PROPERTY BOUNDARY
- PROPOSED RIGHT OF WAY
- EXISTING MAJOR CONTOUR
- EXISTING MINOR CONTOUR
- PROPOSED MAJOR CONTOUR
- PROPOSED MINOR CONTOUR
- OE — OVERHEAD ELECTRIC
- 28 — LOT NUMBER
- ROAD CENTERLINE
- RIBBON CURB
- CURB AND GUTTER
- DIRECTION OF FLOW
- CURB INLET
- 5' SIDEWALK TO BE CONSTRUCTED WITH SUBDIVISION IMPROVEMENTS
- 5' SIDEWALK TO BE CONSTRUCTED BY BUILDER
- CURB RAMP
- CVG — CONCRETE VALLEY GUTTER
- AVG — ASPHALT VALLEY GUTTER

NOTES:

1. ALL CURB RETURN RADII TO BE 25' AT FACE OF CURB UNLESS OTHERWISE NOTED.
2. THE LOCATION OF EXISTING UNDERGROUND UTILITIES ARE SHOWN IN AN APPROXIMATE WAY AND HAVE NOT BEEN INDEPENDENTLY VERIFIED BY THE OWNER OR ITS REPRESENTATIVE. THE CONTRACTOR SHALL DETERMINE THE EXACT LOCATION OF ALL EXISTING UTILITIES BEFORE COMMENCING WORK. THE CONTRACTOR AGREES TO BE FULLY RESPONSIBLE FOR ANY AND ALL DAMAGES WHICH MIGHT BE ASSOCIATED WITH THE CONTRACTORS FAILURE TO LOCATE AND PRESERVE ANY AND ALL UNDERGROUND UTILITIES.
3. SIDEWALKS ADJACENT TO SINGLE FAMILY LOTS ARE TO BE CONSTRUCTED CONCURRENTLY WITH EACH SINGLE FAMILY HOUSE.
4. ALL CURBS TO BE CURB AND GUTTER UNLESS OTHERWISE NOTED.
5. ALL DIMENSIONS ARE TO FACE OF CURB UNLESS OTHERWISE NOTED.
6. ALL PAVEMENT MARKINGS SHALL BE PER THE CURRENT "TEXAS MANUAL ON UNIFORM TRAFFIC CONTROL DEVICES (M.U.T.C.D.): PART III MARKINGS". ALL STRIPING TO BE THERMOPLASTIC.
7. FOR STANDARD STREET END BARRICADE SEE DETAIL ON SHEET 33.

PROFILE LEGEND

- PROPOSED GRADE
- PROPOSED SUBGRADE
- EXISTING GRADE
- PROPOSED CURB INLET

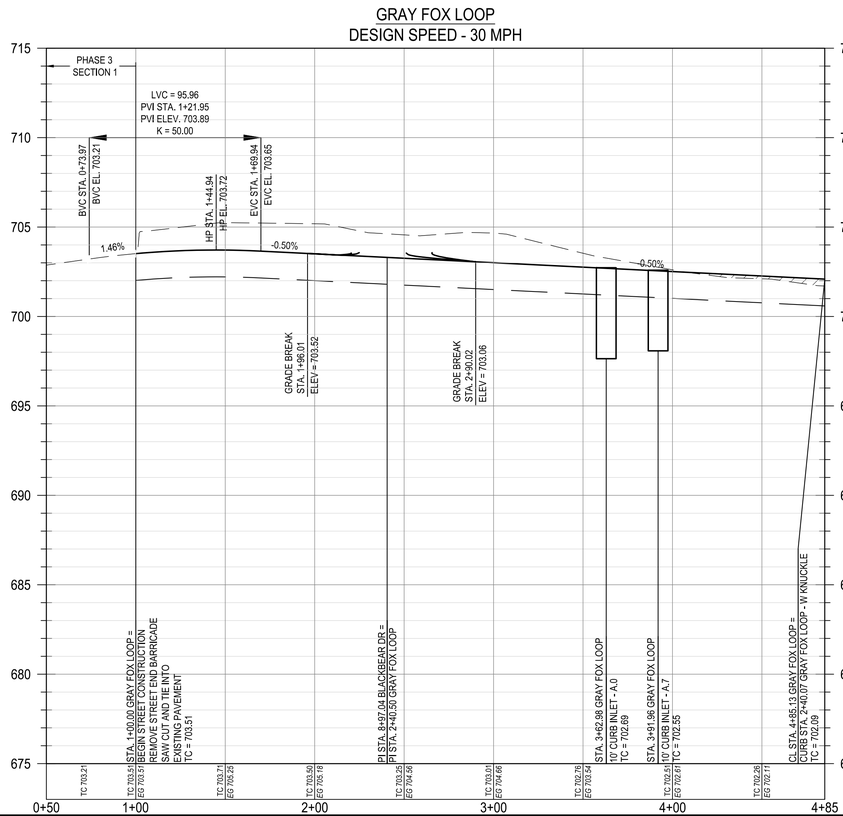

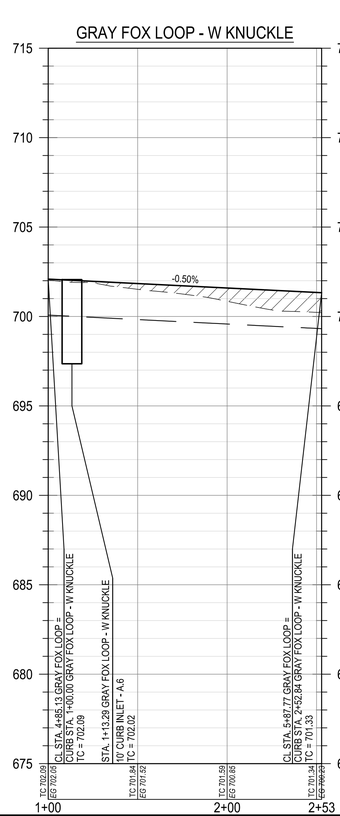

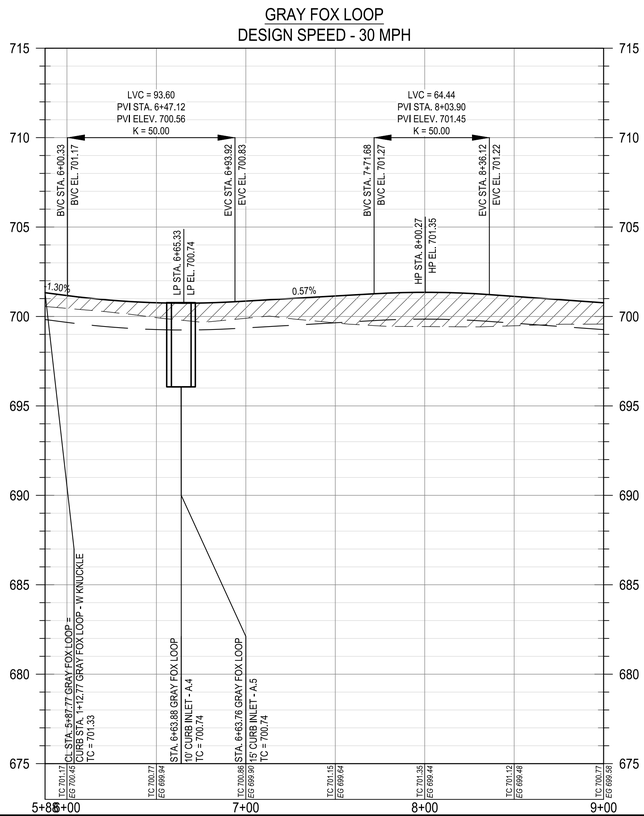

							APR
							DATE
						Record Drawing	DESCRIPTION
◁	◁	◁	◁	◁	◁		REV

DESIGNED BY: DAZ
REVIEWED BY: TMH
DRAWN BY: DAZ

BGE
BGE, INC.
1701 DIRECTORS BOULEVARD, SUITE 1000
AUSTIN, TX 78744
TBPE Registration No. F-1046
TEL: 512-879-0400 www.bgeinc.com

WILCO RANCH PHASE 3 SECTION 2
HUTTO, TEXAS

GRAY FOX LOOP 1+00 TO 9+00

SUBMITTAL DATE: 12-10-2020

TIMOTHY M. HOLLAND
94848
LICENSED
PROFESSIONAL ENGINEER
12/9/2021

SHEET
7 OF 44

G:\TX\CIP\projects\Ashton_Woods\8022-00-Wilco_Ranch_Ph3_Sec2\LD\01_CADD\01_Shts\C-SP-ROAD-P&P-PH 3-SEC 2.dwg Layout: GRAY FOX LOOP 1+00 TO 9+00 Plotted: 8/3/2021 8:30:37 AM

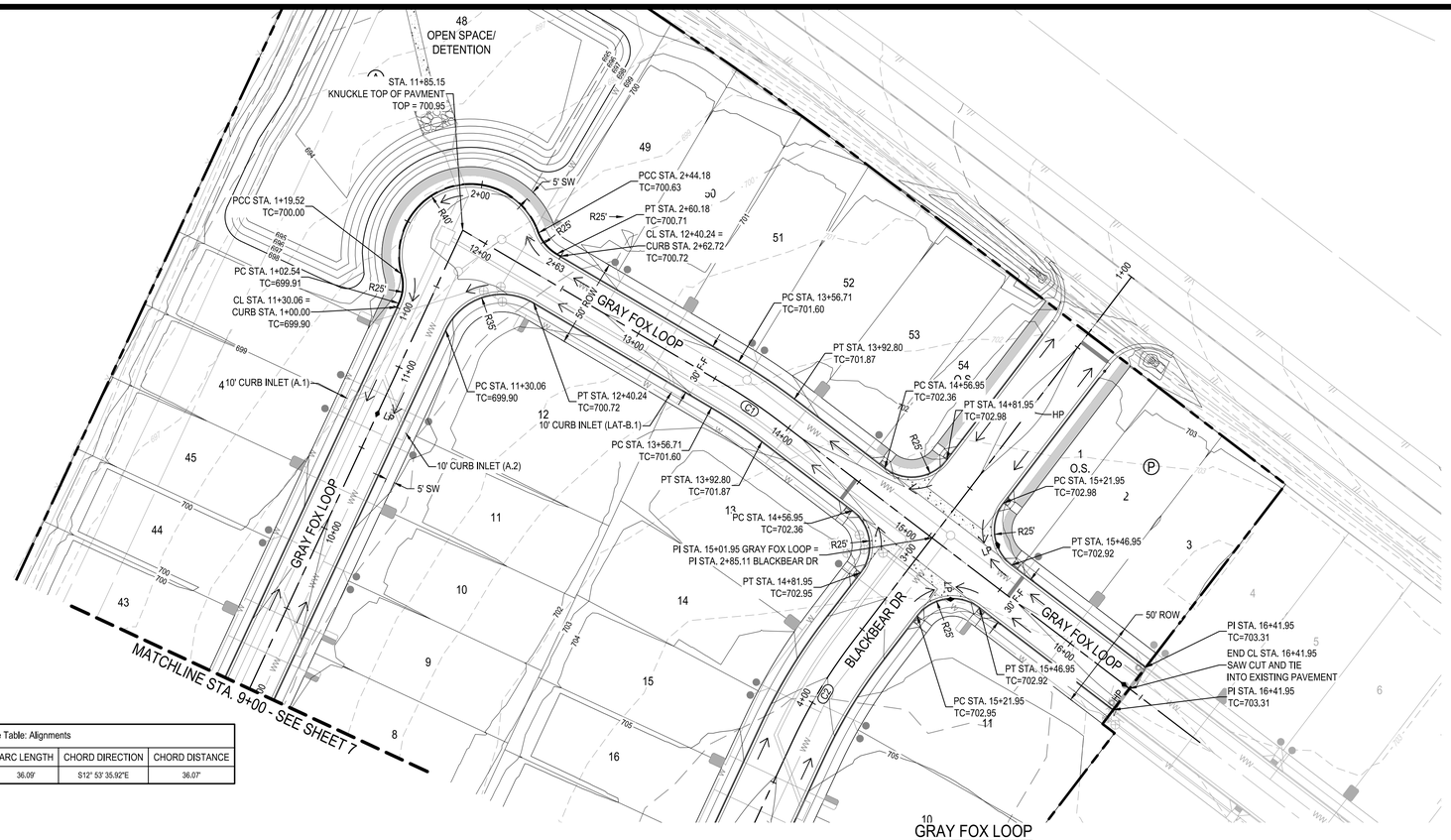

Curve Table: Alignments					
CURVE	DELTA ANGLE	RADIUS	ARC LENGTH	CHORD DIRECTION	CHORD DISTANCE
C1	6°53'37"	300.00'	36.09'	S12° 53' 35.92"E	36.07'

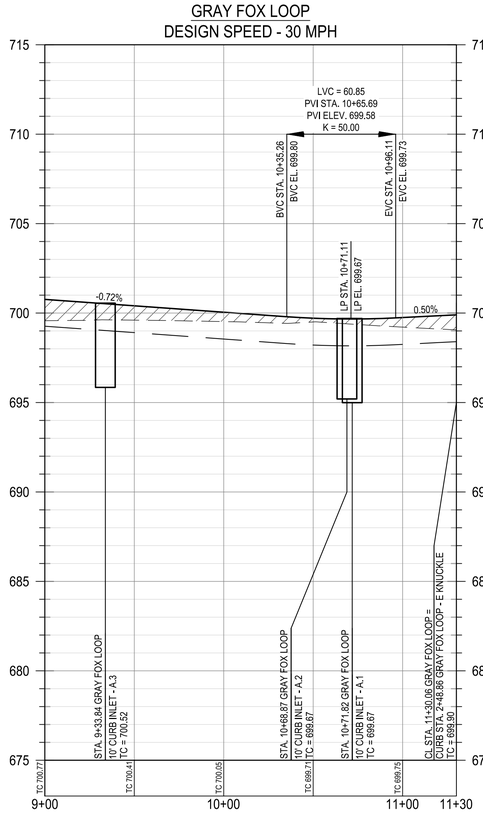

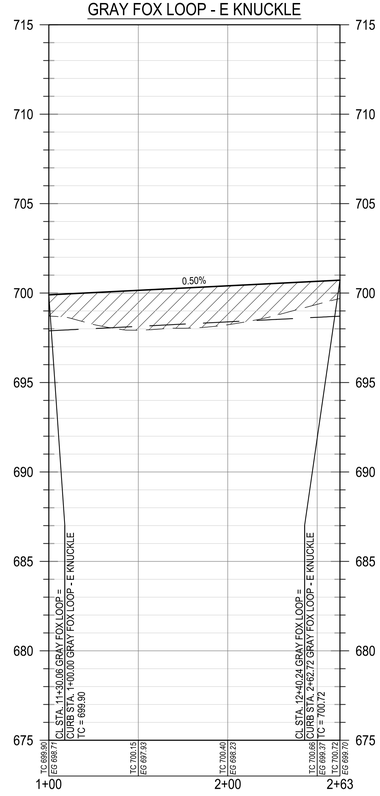

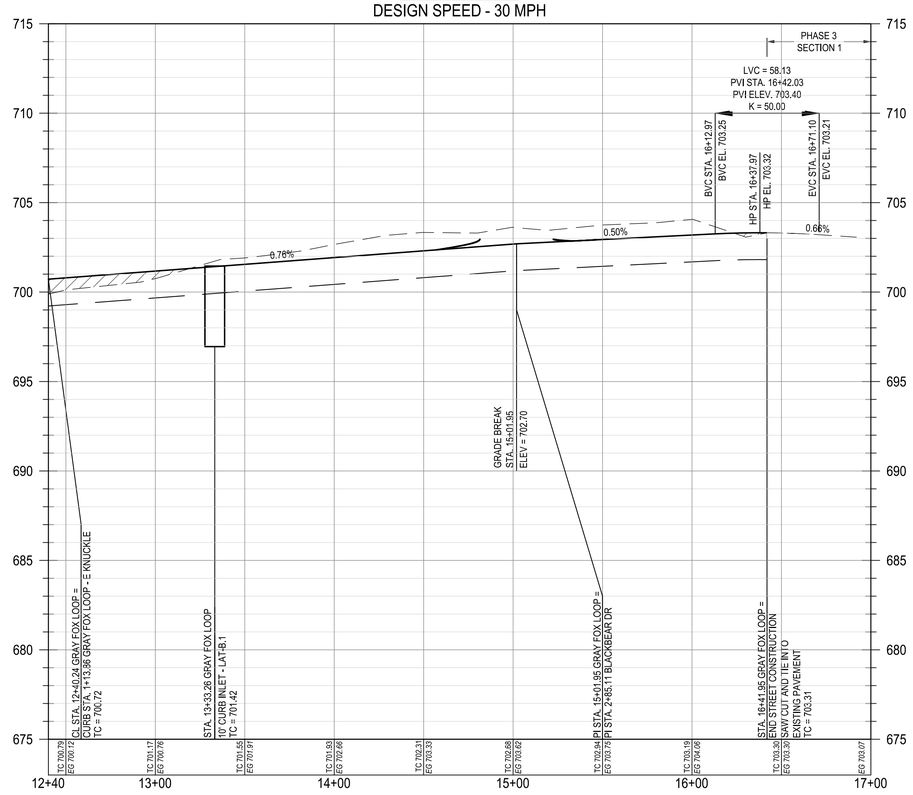

0 20' 40' 80'
SCALE: 1" = 40'

LEGEND

- PROPERTY BOUNDARY
- PROPOSED RIGHT OF WAY
- EXISTING MAJOR CONTOUR
- EXISTING MINOR CONTOUR
- PROPOSED MAJOR CONTOUR
- PROPOSED MINOR CONTOUR
- OE — OVERHEAD ELECTRIC
- 28 — LOT NUMBER
- ROAD CENTERLINE
- RIBBON CURB
- CURB AND GUTTER
- DIRECTION OF FLOW
- CURB INLET
- 5' SIDEWALK TO BE CONSTRUCTED WITH SUBDIVISION IMPROVEMENTS
- 5' SIDEWALK TO BE CONSTRUCTED BY BUILDER
- CURB RAMP
- CVG — CONCRETE VALLEY GUTTER
- AVG — ASPHALT VALLEY GUTTER

NOTES:

1. ALL CURB RETURN RADII TO BE 25' AT FACE OF CURB UNLESS OTHERWISE NOTED.
2. THE LOCATION OF EXISTING UNDERGROUND UTILITIES ARE SHOWN IN AN APPROXIMATE WAY AND HAVE NOT BEEN INDEPENDENTLY VERIFIED BY THE OWNER OR ITS REPRESENTATIVE. THE CONTRACTOR SHALL DETERMINE THE EXACT LOCATION OF ALL EXISTING UTILITIES BEFORE COMMENCING WORK. THE CONTRACTOR AGREES TO BE FULLY RESPONSIBLE FOR ANY AND ALL DAMAGES WHICH MIGHT BE ASSOCIATED WITH THE CONTRACTORS FAILURE TO LOCATE AND PRESERVE ANY AND ALL UNDERGROUND UTILITIES.
3. SIDEWALKS ADJACENT TO SINGLE FAMILY LOTS ARE TO BE CONSTRUCTED CONCURRENTLY WITH EACH SINGLE FAMILY HOUSE.
4. ALL CURBS TO BE CURB AND GUTTER UNLESS OTHERWISE NOTED.
5. ALL DIMENSIONS ARE TO FACE OF CURB UNLESS OTHERWISE NOTED.
6. ALL PAVEMENT MARKINGS SHALL BE PER THE CURRENT "TEXAS MANUAL ON UNIFORM TRAFFIC CONTROL DEVICES (M.U.T.C.D.): PART III MARKINGS". ALL STRIPING TO BE THERMOPLASTIC.
7. FOR STANDARD STREET END BARRICADE SEE DETAIL ON SHEET 33.

PROFILE LEGEND

- PROPOSED GRADE
- PROPOSED SUBGRADE
- EXISTING GRADE
- PROPOSED CURB INLET

REV	DESCRIPTION	DATE	APR
	Record Drawing		

DESIGNED BY: DAZ
REVIEWED BY: TMH
DRAWN BY: DAZ

BGE, INC.
1701 DIRECTORS BOULEVARD, SUITE 1000
AUSTIN, TX 78744
TBPE Registration No. F-1046
TEL: 512-879-0400 www.brownsgay.com

WILCO RANCH PHASE 3 SECTION 2
HUTTO, TEXAS

GRAY FOX LOOP 9+00 TO END

SUBMITTAL DATE: 12-10-2020

TIMOTHY M. HOLLAND 94848 12/9/2021

SHEET
8 OF 44

G:\TXC\Projects\Ashton_Woods\80224-00-Wilco_Ranch_Ph3_Sec2\LD\01_CADD\01_Shts\C-SP-ROAD-P&P-PH 3-SEC 2.dwg Layout: GRAY FOX LOOP 9+00 TO END Plotted: 8/3/2021 8:30:53 AM

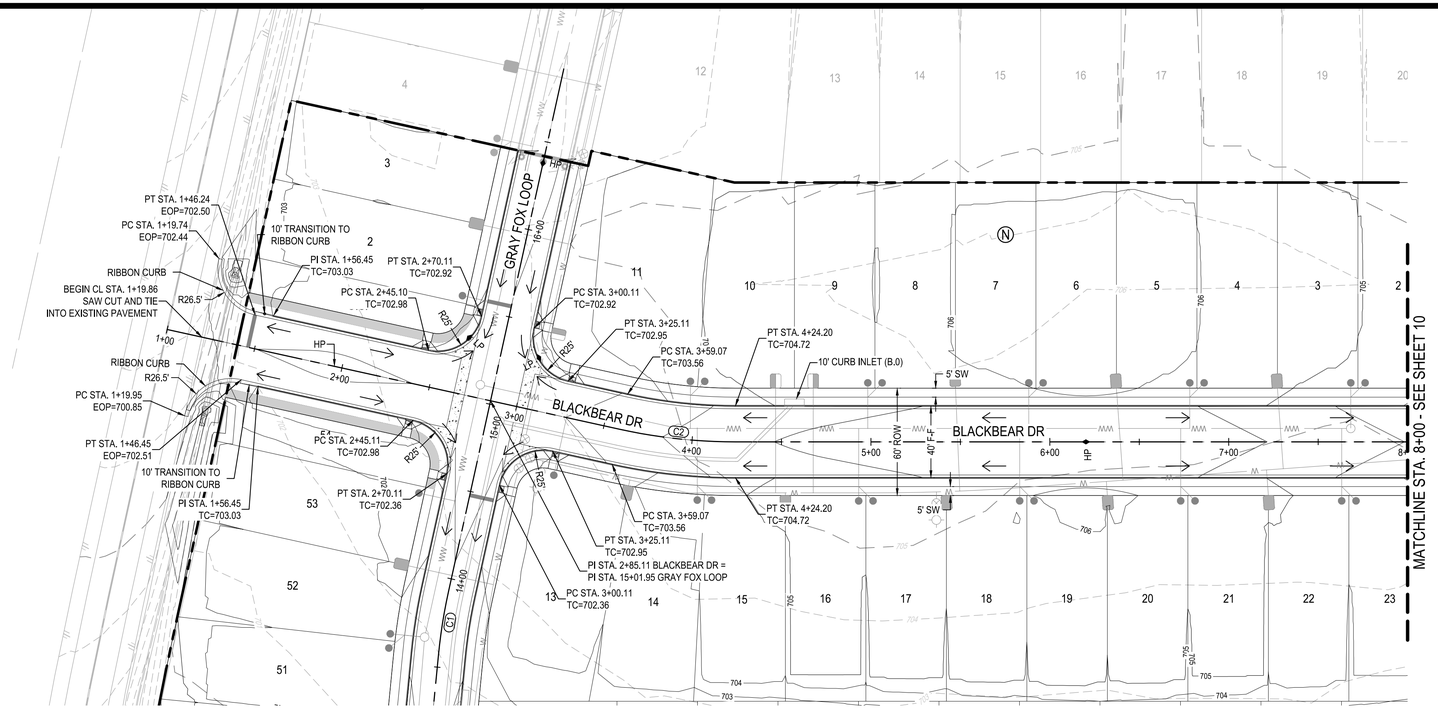

0 20' 40' 80'
SCALE: 1" = 40'

LEGEND

- PROPERTY BOUNDARY
- PROPOSED RIGHT OF WAY
- EXISTING MAJOR CONTOUR
- EXISTING MINOR CONTOUR
- PROPOSED MAJOR CONTOUR
- PROPOSED MINOR CONTOUR
- OE — OVERHEAD ELECTRIC
- 28 — LOT NUMBER
- ROAD CENTERLINE
- RIBBON CURB
- CURB AND GUTTER
- DIRECTION OF FLOW
- CURB INLET
- 5' SIDEWALK TO BE CONSTRUCTED WITH SUBDIVISION IMPROVEMENTS
- 5' SIDEWALK TO BE CONSTRUCTED BY BUILDER
- CURB RAMP
- CVG — CONCRETE VALLEY GUTTER
- AVG — ASPHALT VALLEY GUTTER

Curve Table: Alignments					
CURVE	DELTA ANGLE	RADIUS	ARC LENGTH	CHORD DIRECTION	CHORD DISTANCE
C2	12°26'14"	300.00'	65.12'	S74° 20' 05.39"W	64.99'

NOTES:

1. ALL CURB RETURN RADII TO BE 25' AT FACE OF CURB UNLESS OTHERWISE NOTED.
2. THE LOCATION OF EXISTING UNDERGROUND UTILITIES ARE SHOWN IN AN APPROXIMATE WAY AND HAVE NOT BEEN INDEPENDENTLY VERIFIED BY THE OWNER OR ITS REPRESENTATIVE. THE CONTRACTOR SHALL DETERMINE THE EXACT LOCATION OF ALL EXISTING UTILITIES BEFORE COMMENCING WORK. THE CONTRACTOR AGREES TO BE FULLY RESPONSIBLE FOR ANY AND ALL DAMAGES WHICH MIGHT BE ASSOCIATED WITH THE CONTRACTORS FAILURE TO LOCATE AND PRESERVE ANY AND ALL UNDERGROUND UTILITIES.
3. SIDEWALKS ADJACENT TO SINGLE FAMILY LOTS ARE TO BE CONSTRUCTED CONCURRENTLY WITH EACH SINGLE FAMILY HOUSE.
4. ALL CURBS TO BE CURB AND GUTTER UNLESS OTHERWISE NOTED.
5. ALL DIMENSIONS ARE TO FACE OF CURB UNLESS OTHERWISE NOTED.
6. ALL PAVEMENT MARKINGS SHALL BE PER THE CURRENT "TEXAS MANUAL ON UNIFORM TRAFFIC CONTROL DEVICES (M.U.T.C.D.): PART III MARKINGS". ALL STRIPING TO BE THERMOPLASTIC.
7. FOR STANDARD STREET END BARRICADE SEE DETAIL ON SHEET 33.

PROFILE LEGEND

- PROPOSED GRADE
- PROPOSED SUBGRADE
- EXISTING GRADE
- PROPOSED CURB INLET

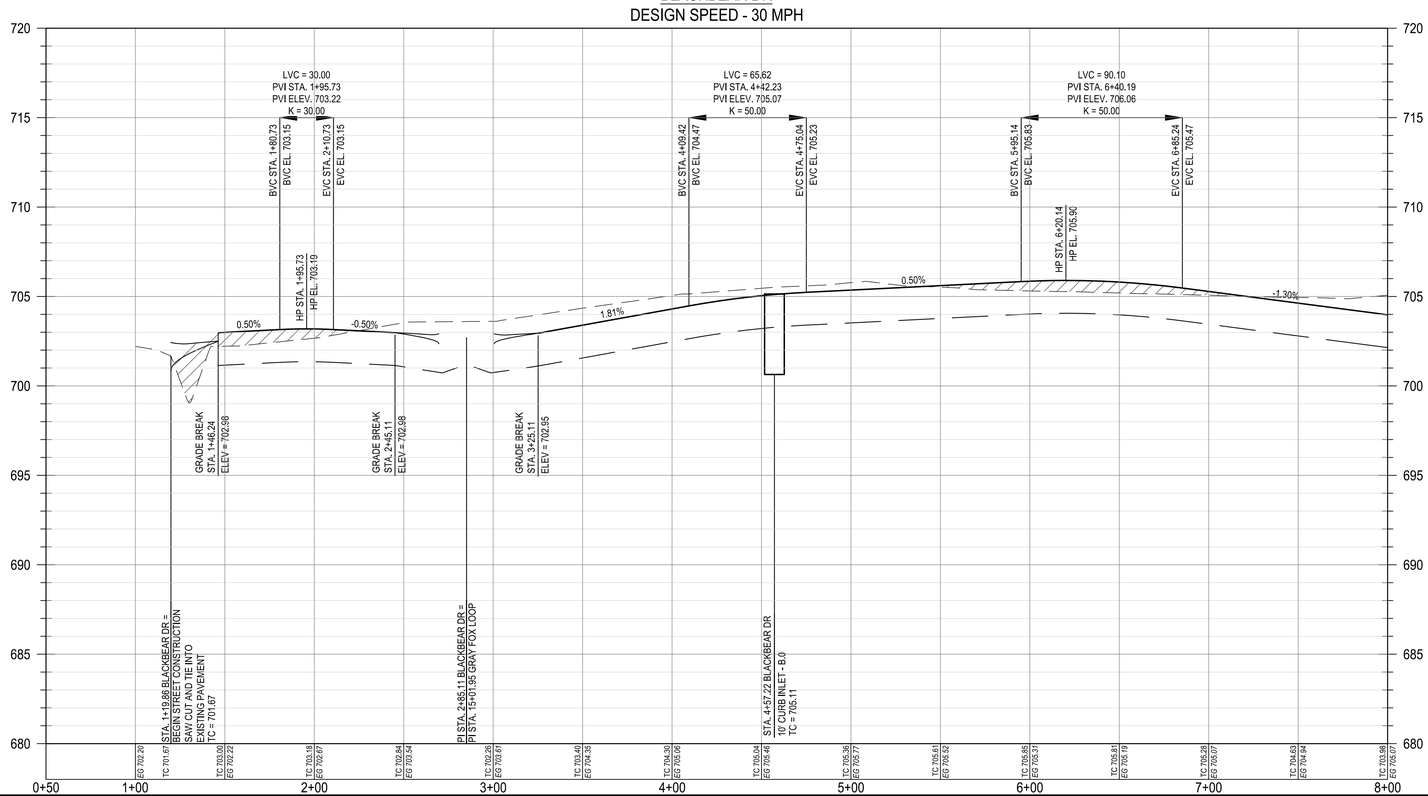

DESIGNED BY:	DAZ
REVIEWED BY:	TMH
DRAWN BY:	DAZ

REV | DESCRIPTION | DATE | APR

Record Drawing

BGE, INC.
1701 DIRECTORS BOULEVARD, SUITE 1000
AUSTIN, TX 78744
TBPE Registration No. F-1046
TEL: 512-879-0400 www.browngay.com

WILCO RANCH PHASE 3 SECTION 2
HUTTO, TEXAS

BLACKBEAR DR 1+00 TO 8+00

SUBMITTAL DATE: 12-10-2020

STATE OF TEXAS
TIMOTHY M. HIGLAND
94848
LICENSED PROFESSIONAL ENGINEER
3/3/2021

SHEET
9 OF 44

G:\TX\C\Projects\Ashton_Woods\8022-00-Wilco_Ranch_Ph3_Sec2\LD\01_CADD\01_Shts\C-SP-ROAD-P&P-PH 3-SEC 2.dwg Layout:BLACKBEAR DR 1+00 TO 8+00 Plotted: 8/3/2021 8:31:04 AM

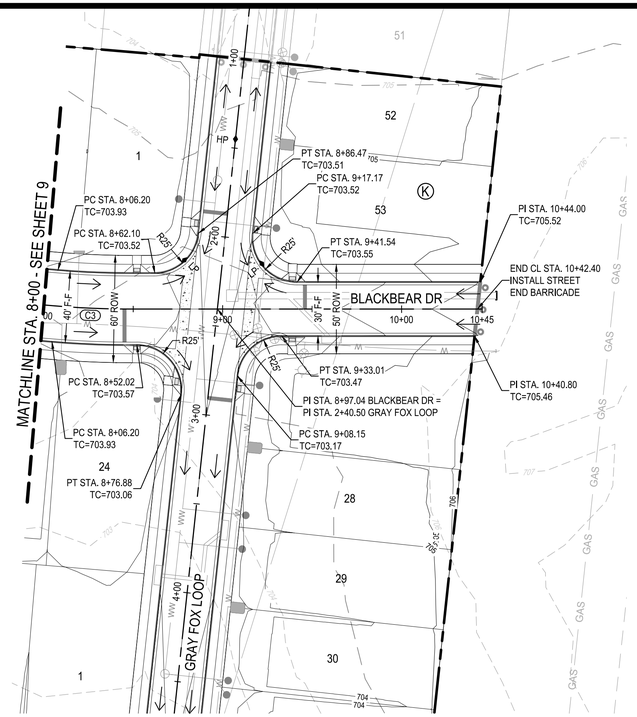

Curve Table: Alignments					
CURVE	DELTA ANGLE	RADIUS	ARC LENGTH	CHORD DIRECTION	CHORD DISTANCE
C3	4°49'50"	500.00'	42.16'	S65° 42' 03.22"W	42.14'

BLACKBEAR DR
DESIGN SPEED - 30 MPH

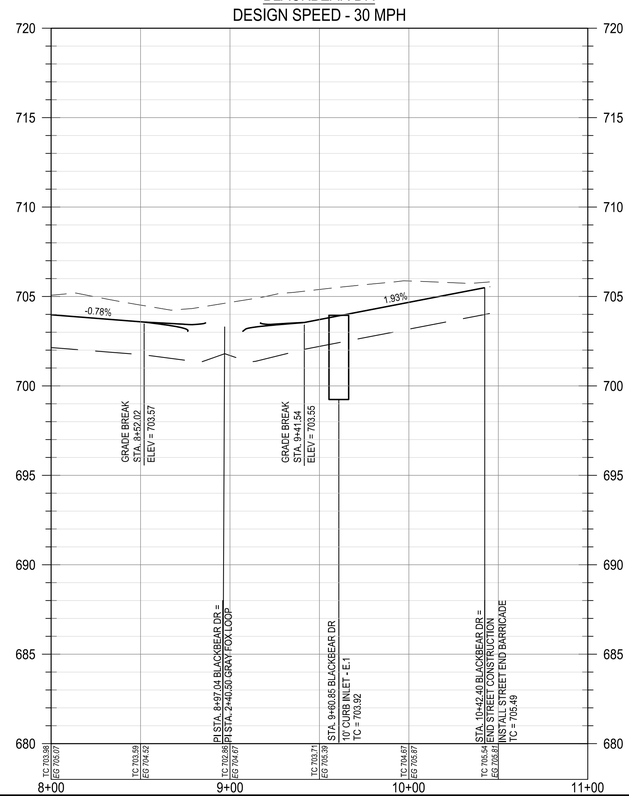

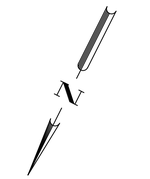

0 20' 40' 80'
SCALE: 1" = 40'

LEGEND

- PROPERTY BOUNDARY
- PROPOSED RIGHT OF WAY
- EXISTING MAJOR CONTOUR
- EXISTING MINOR CONTOUR
- PROPOSED MAJOR CONTOUR
- PROPOSED MINOR CONTOUR
- OE — OVERHEAD ELECTRIC
- 28 — LOT NUMBER
- ROAD CENTERLINE
- RIBBON CURB
- CURB AND GUTTER
- DIRECTION OF FLOW
- CURB INLET
- 5' SIDEWALK TO BE CONSTRUCTED WITH SUBDIVISION IMPROVEMENTS
- 5' SIDEWALK TO BE CONSTRUCTED BY BUILDER
- CURB RAMP
- CVG — CONCRETE VALLEY GUTTER
- AVG — ASPHALT VALLEY GUTTER

NOTES:

1. ALL CURB RETURN RADII TO BE 25' AT FACE OF CURB UNLESS OTHERWISE NOTED.
2. THE LOCATION OF EXISTING UNDERGROUND UTILITIES ARE SHOWN IN AN APPROXIMATE WAY AND HAVE NOT BEEN INDEPENDENTLY VERIFIED BY THE OWNER OR ITS REPRESENTATIVE. THE CONTRACTOR SHALL DETERMINE THE EXACT LOCATION OF ALL EXISTING UTILITIES BEFORE COMMENCING WORK. THE CONTRACTOR AGREES TO BE FULLY RESPONSIBLE FOR ANY AND ALL DAMAGES WHICH MIGHT BE ASSOCIATED WITH THE CONTRACTORS FAILURE TO LOCATE AND PRESERVE ANY AND ALL UNDERGROUND UTILITIES.
3. SIDEWALKS ADJACENT TO SINGLE FAMILY LOTS ARE TO BE CONSTRUCTED CONCURRENTLY WITH EACH SINGLE FAMILY HOUSE.
4. ALL CURBS TO BE CURB AND GUTTER UNLESS OTHERWISE NOTED.
5. ALL DIMENSIONS ARE TO FACE OF CURB UNLESS OTHERWISE NOTED.
6. ALL PAVEMENT MARKINGS SHALL BE PER THE CURRENT "TEXAS MANUAL ON UNIFORM TRAFFIC CONTROL DEVICES (M.U.T.C.D.): PART III MARKINGS". ALL STRIPING TO BE THERMOPLASTIC.
7. FOR STANDARD STREET END BARRICADE SEE DETAIL ON SHEET 33.

PROFILE LEGEND

- PROPOSED GRADE
- PROPOSED SUBGRADE
- EXISTING GRADE
- PROPOSED CURB INLET

REV	DESCRIPTION	DATE	APR
	Record Drawing		

DESIGNED BY: DAZ
REVIEWED BY: TMH
DRAWN BY: DAZ

BGE, INC.
1701 DIRECTORS BOULEVARD, SUITE 1000
AUSTIN, TX 78744
TBPE Registration No. F-1046
TEL: 512-879-0400 www.browngay.com

WILCO RANCH PHASE 3 SECTION 2
HUTTO, TEXAS

BLACKBEAR DR 8+00 TO END

SUBMITTAL DATE: 12-10-2020

STATE OF TEXAS
TIMOTHY M. HIGLAND
94848
LICENSED PROFESSIONAL ENGINEER
3/3/2021

SHEET
10 OF 44

G:\TX\C\Projects\Ashton_Woods\8022-00-Wilco_Ranch_Ph3_Sec2\LD\01_CADD\01_Shts\C-SP-ROAD-P&P-PH 3-SEC 2.dwg Layout: BLACKBEAR DR 8+00 TO END Plotted: 8/3/2021 8:31:17 AM

REV	DESCRIPTION	DATE	APR
	Record Drawing		

DESIGNED BY: DAZ
REVIEWED BY: TMH
DRAWN BY: DAZ

BGE, INC.
1701 DIRECTORS BOULEVARD, SUITE 1000
AUSTIN, TX 78744
TBPE Registration No. F-1046
TEL: 512-879-0400 www.brownbge.com

WILCO RANCH PHASE 3 SECTION 2
HUTTO, TEXAS

PRE-DEVELOPMENT DRAINAGE AREAS

SUBMITTAL DATE: 12-10-2020

STATE OF TEXAS
TIMOTHY M. HOLLAND
94848
LICENSED PROFESSIONAL ENGINEER
3/3/2021

SHEET
11 OF 44

G:\TXCI\Projects\Ashton_Woods\8022-00-Wilco_Ranch_Ph3_Sec2\LD\01_CADD\05_Exhibits\C-RE-HYDROLOGY.dwg Layout: PRE-DEVELOPMENT DRAINAGE AREAS Plotted: 8/3/2021 8:31:39 AM

0 75 150 300

SCALE: 1" = 150'

LEGEND

PROPERTY BOUNDARY

DRAINAGE AREA BOUNDARY

TIME OF CONCENTRATION

DIRECTION OF FLOW

Table 3. Flow Rates (cfs) @ POI-3

	Pre-Dev	Post-Dev No Pond	Post-Dev With Pond (Site - Ultimate Development)
2yr	30.1	35.2	21.9
10yr	44.0	60.6	37.8
25yr	54.2	79.3	49.9
100yr	72.9	113.5	69.4

Flow Rates (cfs @ POI-2)

	Pre-Dev	Post-Dev No Pond	Post Dev
2-YR	33.4	14.1	14.1
10-YR	59.2	24	24
25-YR	78.3	31.2	31.2
100-YR	113.2	44.6	44.6

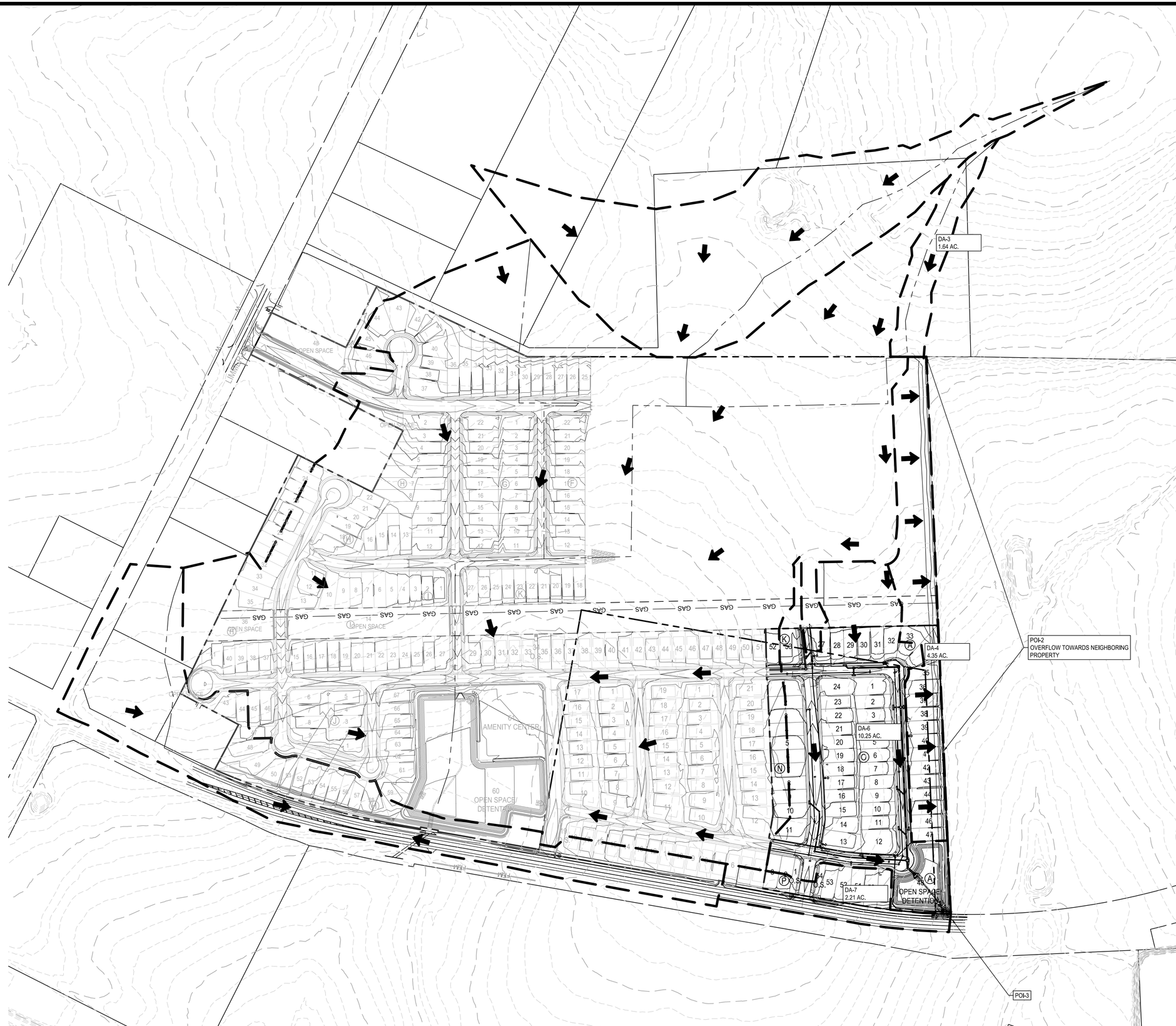

REV	DESCRIPTION	DATE	APR
	Record Drawing		

DESIGNED BY: DAZ

REVIEWED BY: TMH

DRAWN BY: DAZ

BGE

BGE, INC.
1701 DIRECTORS BOULEVARD, SUITE 1000
AUSTIN, TX 78744
TBPE Registration No. F-1046
TEL: 512-879-0400 www.brownbgey.com

WILCO RANCH PHASE 3 SECTION 2
HUTTO, TEXAS

POST-DEVELOPMENT DRAINAGE AREAS AND DETENTION POND

SUBMITTAL DATE: 12-10-2020

STATE OF TEXAS
TIMOTHY M. HOLLAND
94848
LICENSED
PROFESSIONAL ENGINEER
8/9/2021

SHEET
12 OF 44

G:\TXC\Projects\Ashton_Woods\8022-00-Wilco_Ranch_Ph3_Sec2\LD\01_CADD\05_Exhibits\C-BP-HYDROLOGY.dwg Layout: POST-DEVELOPMENT DRAINAGE AREAS Plotted: 8/3/2021 8:32:49 AM

G:\TXCI\Projects\Ashton_Woods\8022-00-Wilco_Ranch_Ph3_Sec2\LD\01_CADD\01_Sits\C-SP-DAM-OVAL-PH 3-SEC 2.dwg Layout: DRAINAGE AREA MAP Plotted: 8/3/2021 8:33:48 AM

REV	DESCRIPTION	DATE	APR
	Record Drawing		

DESIGNED BY: DAZ
REVIEWED BY: TMH
DRAWN BY: DAZ

BGE

BGE, INC.
1701 DIRECTORS BOULEVARD, SUITE 1000
AUSTIN, TX 78744
TBPE Registration No. F-1046
TEL: 512-879-0400 www.browngay.com

WILCO RANCH PHASE 3 SECTION 2
HUTTO, TEXAS

DRAINAGE AREA MAP

SUBMITTAL DATE: 12-10-2020

STATE OF TEXAS
TIMOTHY M. HOLLAND
94848
LICENSED
PROFESSIONAL ENGINEER
8/3/2021

SHEET
13 OF 44

Post-Development TOC

Drainage Area	Total Area, acres	Time of Conc'n, Tc (min)
DA.B.1	0.83	9.33
DA.B.2	0.36	8.70
DA.A.1.0	0.15	5.00
DA.A.1.1	0.63	12.92
DA.A.2.0	0.76	7.44
DA.A.2.1	0.51	8.71
DA A.3	0.81	7.32
DA.A.4.0	0.97	15.62
DA.A.4.1	0.08	5.00
DA.A.5.0	0.62	8.52
DA.A.5.1	0.81	7.42
DA.A.6	0.77	9.26
DA.A.7	0.86	10.25
DA.A.0	1.21	10.30
DA E.9	0.49	6.46
DA.OFF.1	0.74	5.86

CALCULATION OF IMPERVIOUS COVER AND "C" VALUES

ASSUMPTIONS		
40 ft Lot	2601	sf
45 ft Lot	2601	sf
60 ft Lot		sf
One half Street (50 ROW)	20.5	lf
One half Street (60 ROW)	25.5	lf
Knuckle (50' radius)	9160	sf
Impervious C2	0.74	
Pervious C2	0.29	
Impervious C25	0.87	
Pervious C25	0.39	
Impervious C100	0.96	
Pervious C100	0.46	

Note: Street and knuckle impervious cover includes sidewalk

AREA	ACRES	# OF LOTS 40 FT	45 FT	60 FT	ST LENGTH (50 ROW)	ST LENGTH (60 ROW)	KNUCKLE	IC (SF)	IMPERV. COVER	C2	C25	C100
DA.B.1	0.83	0	1.75	0	308.6	521.7	0	24181.4	67%	0.591	0.711	0.794
DA.B.2	0.36	0	2	0	0	179.19	0	9771.345	62%	0.570	0.689	0.772
DA.A.1.0	0.15	0	0	0	270	0	0	5535	85%	0.671	0.797	0.884
DA.A.1.1	0.63	0	1.5	0	434.4	190.2	0.67	23794	87%	0.680	0.806	0.894
DA.A.2.0	0.76	0	5.5	0	135	0	0	17073	52%	0.522	0.638	0.718
DA.A.2.1	0.51	0	2	0	250.8	0	0.33	13366.2	60%	0.561	0.679	0.761
DA A.3	0.81	0	6	0	135	0	0	18373.5	52%	0.524	0.640	0.720
DA.A.4.0	0.97	3	1.5	0	73.6	0	0.67	19350.5	46%	0.496	0.610	0.689
DA.A.4.1	0.08	0	0	0	135	0	0	2767.5	79%	0.647	0.771	0.857
DA.A.5.0	0.62	0	3.5	0	160.9	0	0.33	15424.75	57%	0.547	0.664	0.746
DA.A.5.1	0.81	0	6	0	135	0	0	18373.5	52%	0.524	0.640	0.720
DA.A.6	0.77	1.5	3	0	135.9	0	0	14490.45	43%	0.484	0.597	0.676
DA.A.7	0.86	0	3	0	242.3	524.8	0	26152.55	70%	0.604	0.725	0.809
DA.A.0	1.21	2	2.67	0	668.1	0	0	25842.72	49%	0.511	0.625	0.705
DA E.9	0.49	0.5	0.33	0	296.25	0	0	8231.955	39%	0.464	0.575	0.653
DA.OFF.1	0.74	0	1.5	0	80.1	0	0	5543.55	17%	0.367	0.473	0.546

STREET / INLET CAPACITIES
25-YEAR

Crown Height Collect. 0.58
Crown Height Local 0.50

					STREET CAPACITY					INLET ON GRADE							SUMP INLET				
Drainage Area	Inlet Type	Upstream	Q(pass) (cfs)	$Q_{(25)}$ (cfs)	Street Width (ft)	Slope (ft/ft)	a (ft)	Y_o (ft)	Ponded Width (ft)	Q_a/L_a (ft)	Length Needed (ft)	Length (ft)	L/L_{need} '*=>Qpass	a/Y_o	Possible Q (cfs)	$Q_{(pass)}$ (cfs)	Clogging Factor	$Q_{(25)}$ (cfs)	Allowable head (ft)	Inlet Length (ft)	Calculated head (ft)
DA.B.1	Grade Inlet	DA.B.2	0	5.0	30	0.0076	0.42	0.44	9.65	0.90	5.57	10	1.0	0.95	8.98	0					
DA.B.2	Grade Inlet		0	2.1	40	0.0090	0.42	0.30	7.24	0.75	2.80	10	1.0	1.41	7.49	0					
DA.A.1.0	Sump Inlet		0	1.2	30	0.0072	0.42	0.27	4.93	-	-	-	-	-	-	-	10%	5.00	0.5	10	0.33
DA.A.1.1	Sump Inlet		0	3.8	30	0.0050	0.42	0.43	9.27	-	-	-	-	-	-	-					
DA.A.2.0	Sump Inlet	DA A.3	0	4.4	30	0.0072	0.42	0.42	9.08	-	-	-	-	-	-	-	10%	7.40	0.5	10	0.42
DA.A.2.1	Sump Inlet		0	3.0	30	0.0050	0.42	0.39	8.13	-	-	-	-	-	-	-					
DA A.3	Grade Inlet		0	4.7	30	0.0072	0.42	0.43	9.44	0.89	5.26	10	1.0	0.97	8.93	0					
DA.A.4.0	Sump Inlet		0	4.0	30	0.0130	0.42	0.37	7.38	-	-	-	-	-	-	-	10%	4.60	0.5	10	0.31
DA.A.4.1	Sump Inlet	DA.A.6	0	0.6	30	0.0057	0.42	0.23	3.92	-	-	-	-	-	-	-					
DA.A.5.0	Sump Inlet	DA.A.7	0	3.6	30	0.0130	0.42	0.36	7.01	-	-	-	-	-	-	-	10%	8.30	0.5	15	0.37
DA.A.5.1	Sump Inlet		0	4.7	30	0.0057	0.42	0.45	10.18	-	-	-	-	-	-	-					
DA.A.6	Grade Inlet	DA.A.0	0	3.9	30	0.0050	0.42	0.43	9.42	0.89	4.37	10	1.0	0.97	8.92	0					
DA.A.7	Grade Inlet		0	5.1	30	0.0050	0.42	0.47	11.36	0.94	5.45	10	1.0	0.89	9.36	0					
DA.A.0	Grade Inlet	DA E.9	0	6.1	30	0.0050	0.42	0.50	14.41	0.97	6.30	10	1.0	0.83	9.69	0					
DA E.9	Grade Inlet		0	2.7	30	0.0193	0.42	0.31	5.64	0.76	3.56	10	1.0	1.36	7.58	0					
DA.OFF.1	Grade Inlet		0	3.4	-	-	-	-	-	-	-	-	-	-	-	-					

STREET / INLET CAPACITIES
100-YEAR

								STREET CAPACITY					INLET ON GRADE							SUMP INLET				
Drainage Area	Inlet Type	Upstream			$Q_{(100)}$ (cfs)	$Q_{(add)}$ (cfs)	$Q_{(pass)}$ (cfs)	$Q_{(int)}$ (cfs)	Street Width (ft)	Slope (ft/ft)	a (ft)	Y_o (ft)	Ponded Width (ft)	Q_a/L_a (ft)	Length Needed (ft)	Length (ft)	L/L_{need} '*=>Qpass	a/Y_o	Possible Q (cfs)	$Q_{(bypass)}$ (cfs)	Clogging Factor	$Q_{(int)}$ (cfs)	Allowable head (ft)	Inlet Length (ft)	Calculated head (ft)
DA.B.1	Grade Inlet	DA.B.2	0	0	7.00		0.00	**7.00**	30	0.0076	0.42	0.49	12.63	0.96	7.33	10	1.0	0.85	9.55	0					
DA.B.2	Grade Inlet	0	0	0	3.00		0.00	**3.00**	40	0.0090	0.42	0.34	8.55	0.79	3.80	10	1.0	1.24	7.90	0					
DA.A.1.0	Sump Inlet	0	0	0	1.70		0.00	**1.70**	30	0.0072	0.42	0.31	5.71	-	-	-	-	-	-	-	10%	7.74	0.5	10	0.44
DA.A.1.1	Sump Inlet	0	0	0	5.30		0.00	**5.30**	30	0.0050	0.42	0.48	11.75	-	-	-	-	-	-	-					
DA.A.2.0	Sump Inlet	DA A.3	0	0	6.20		0.00	**6.20**	30	0.0072	0.42	0.47	11.49	-	-	-	-	-	-	-	10%	9.66	0.5	10	0.50
DA.A.2.1	Sump Inlet	0	0	0	4.20		0.00	**4.20**	30	0.0050	0.42	0.44	9.86	-	-	-	-	-	-	-					
DA A.3	Grade Inlet	0	0	0	6.70		0.00	**6.70**	30	0.0072	0.42	0.48	12.39	0.95	7.04	10	1.0	0.86	9.52	0.00					
DA.A.4.0	Sump Inlet	0	0	0	5.90		0.00	**5.90**	30	0.0130	0.42	0.42	9.07	-	-	-	-	-	-	-	10%	8.46	0.5	10	0.46
DA.A.4.1	Sump Inlet	DA.A.6	0	0	0.90	0.06	0.00	**0.96**	30	0.0057	0.42	0.27	4.72	-	-	-	-	-	-	-					
DA.A.5.0	Sump Inlet	DA.A.7	0	0	5.10	3.33	0.00	**8.43**	30	0.0130	0.42	0.47	11.61	-	-	-	-	-	-	-	10%	13.37	0.5	15	0.50
DA.A.5.1	Sump Inlet	0	0	0	6.60		0.06	**6.54**	30	0.0057	0.42	0.50	14.80	-	-	-	-	-	-	-					
DA.A.6	Grade Inlet	DA.A.0	0	0	5.50	3.76	3.14	**6.12**	30	0.0050	0.42	0.50	14.68	0.97	9.55	10	1.0	0.83	9.69	0					
DA.A.7	Grade Inlet	0	0	0	7.20	2.68	3.76	**6.12**	30	0.0050	0.42	0.50	14.68	0.97	10.19	10	1.0	0.83	9.69	0.19					
DA.A.0	Grade Inlet	DA E.9	0	0	8.80		2.68	**6.12**	30	0.0050	0.42	0.50	14.68	0.97	9.08	10	1.0	0.83	9.69	0					
DA E.9	Grade Inlet	0	0	0	3.80		0.00	**3.80**	30	0.0193	0.42	0.34	6.56	0.80	4.77	10	1.0	1.22	7.96	0					
DA.OFF.1	Grade Inlet	0	0	0	4.90		4.90		-	-	-	-	-	-	-	-	-	-	-	-					

Customized Table

Culvert Crossing: Blackbear Drive

Total Discharge (cfs)	Culvert Discharge (cfs)	Headwater Elevation (ft)	Inlet Control Depth(ft)	Outlet Control Depth(ft)	Tailwater Depth (ft)	Outlet Velocity (ft/s)
3.40	3.40	699.76	1.05	-0.10	0.79	6.35
3.55	3.55	699.78	1.07	-0.07	0.80	6.33
3.70	3.70	699.81	1.10	-0.04	0.81	6.50
3.85	3.85	699.83	1.12	-0.01	0.83	6.57
4.00	4.00	699.86	1.15	0.02	0.84	6.64
4.15	4.15	699.88	1.17	0.05	0.85	6.71
4.30	4.30	699.91	1.20	0.08	0.86	6.77
4.45	4.45	699.94	1.23	0.11	0.87	6.84
4.60	4.60	699.96	1.25	0.14	0.88	6.90
4.75	4.75	699.99	1.28	0.17	0.89	6.96
4.90	4.90	700.01	1.30	0.20	0.91	7.01

REV	DESCRIPTION	DATE	APR
	Record Drawing		

DESIGNED BY: DAZ
REVIEWED BY: TMH
DRAWN BY: DAZ

BGE, INC.
1701 DIRECTORS BOULEVARD, SUITE 1000
AUSTIN, TX 78744
TBPE Registration No. F-1046
TEL: 512-879-0400 www.bgeinc.com

WILCO RANCH PHASE 3 SECTION 2
HUTTO, TEXAS

DRAINAGE CALCULATIONS

SUBMITTAL DATE: 12-10-2020

STATE OF TEXAS
TIMOTHY M. HOLLAND
94848
LICENSED PROFESSIONAL ENGINEER
8/3/2021

SHEET
14 OF 44

G:\TXC\Projects\Ashton_Woods\8022-00-Wilco_Ranch_Ph3_Sec2\LD\01_CADD\01_Sitis\C-SP-DAM-OVAL-PH 3-SEC 2.dwg Layout: DRAINAGE CALCULATIONS Plotted: 8/3/2021 8:33:50 AM

Curve Table: Alignments					
CURVE	DELTA ANGLE	RADIUS	ARC LENGTH	CHORD DIRECTION	CHORD DISTANCE
C1	6°53'37"	292.50'	35.19'	S12° 53' 35.92"E	35.17'
C2	12°26'14"	310.00'	67.29'	S74° 20' 05.39"W	67.16'

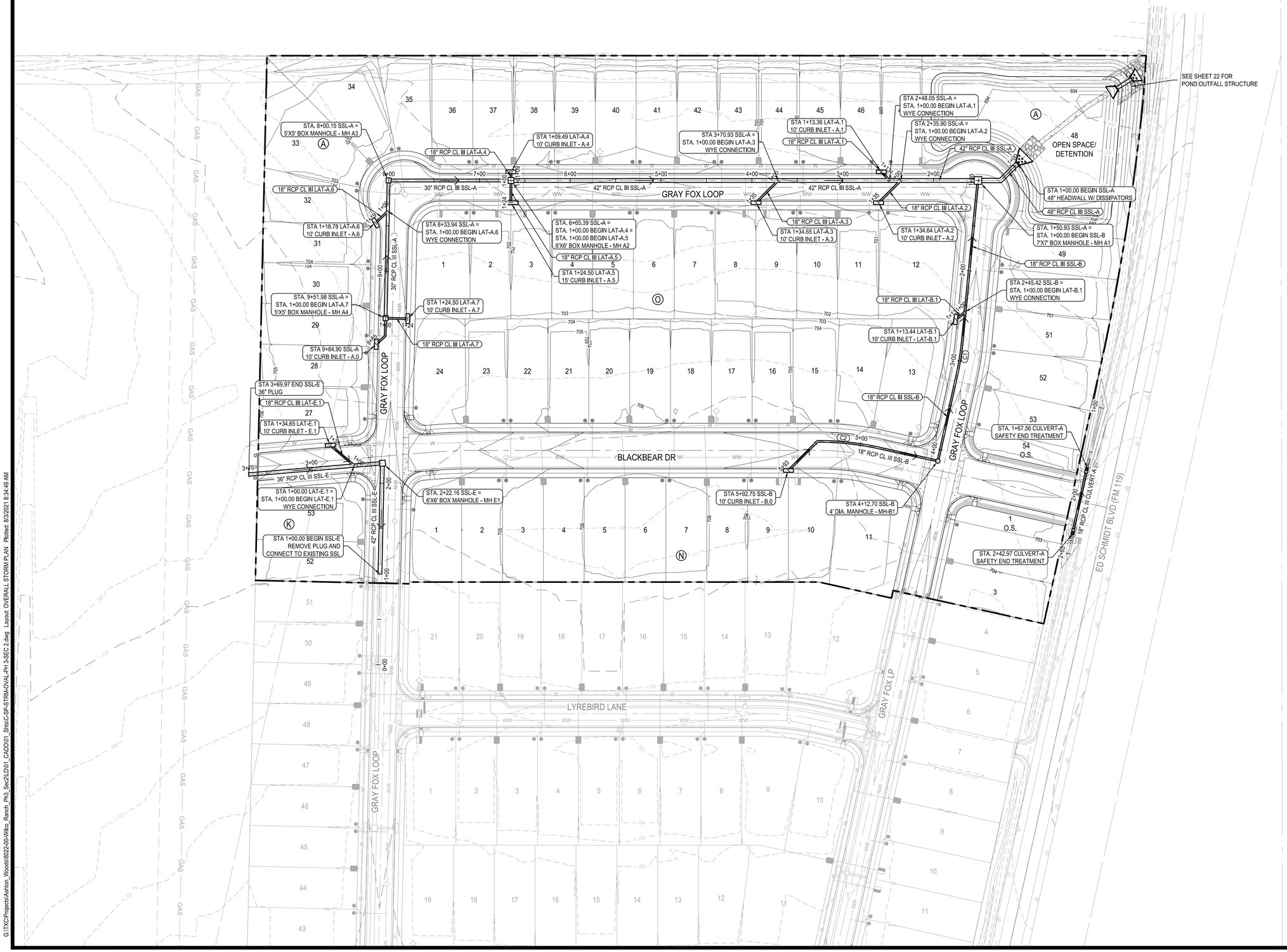

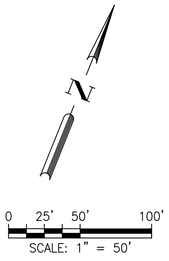

LEGEND

- PROPERTY BOUNDARY
- EXISTING MAJOR CONTOUR
- EXISTING MINOR CONTOUR
- PROPOSED MAJOR CONTOUR
- PROPOSED MINOR CONTOUR
- STORM SEWER FLOW DIRECTION
- PROPOSED MANHOLE
- 10' CURB INLET

NOTES:

1. ALL INLET WYE CONNECTIONS TO BE 45 DEGREES UNLESS OTHERWISE NOTED.
2. CONTRACTOR TO BE AWARE OF OVERHEAD ELECTRIC LINES AT ALL TIMES.
3. ALL MANHOLE COVERS SHALL BE STAMPED "STORM DRAIN" ONLY WITHOUT ANY CITY REFERENCES.

REV	DESCRIPTION	DATE	APR
	Record Drawing		

DESIGNED BY: DAZ
REVIEWED BY: TMH
DRAWN BY: DAZ

BGE
BGE, INC.
1701 DIRECTORS BOULEVARD, SUITE 1000
AUSTIN, TX 78744
TBPE Registration No. F-1046
TEL: 512-879-0400 www.bgeinpgy.com

WILCO RANCH PHASE 3 SECTION 2
HUTTO, TEXAS

OVERALL STORM PLAN

SUBMITTAL DATE: 12-10-2020

STATE OF TEXAS
TIMOTHY M. HOLLAND
94848
PROFESSIONAL ENGINEER
3/3/2021

SHEET
15 OF 44

G:\TXC\Projects\Ashton_Woods\8022-00-Wilco_Ranch_Ph3_Sec2\LD\01_CADD\01_Shts\C-SP-STRM-OVALPH3-SEC2.dwg Layout: OVERALL STORM PLAN Plotted: 8/3/2021 8:34:49 AM

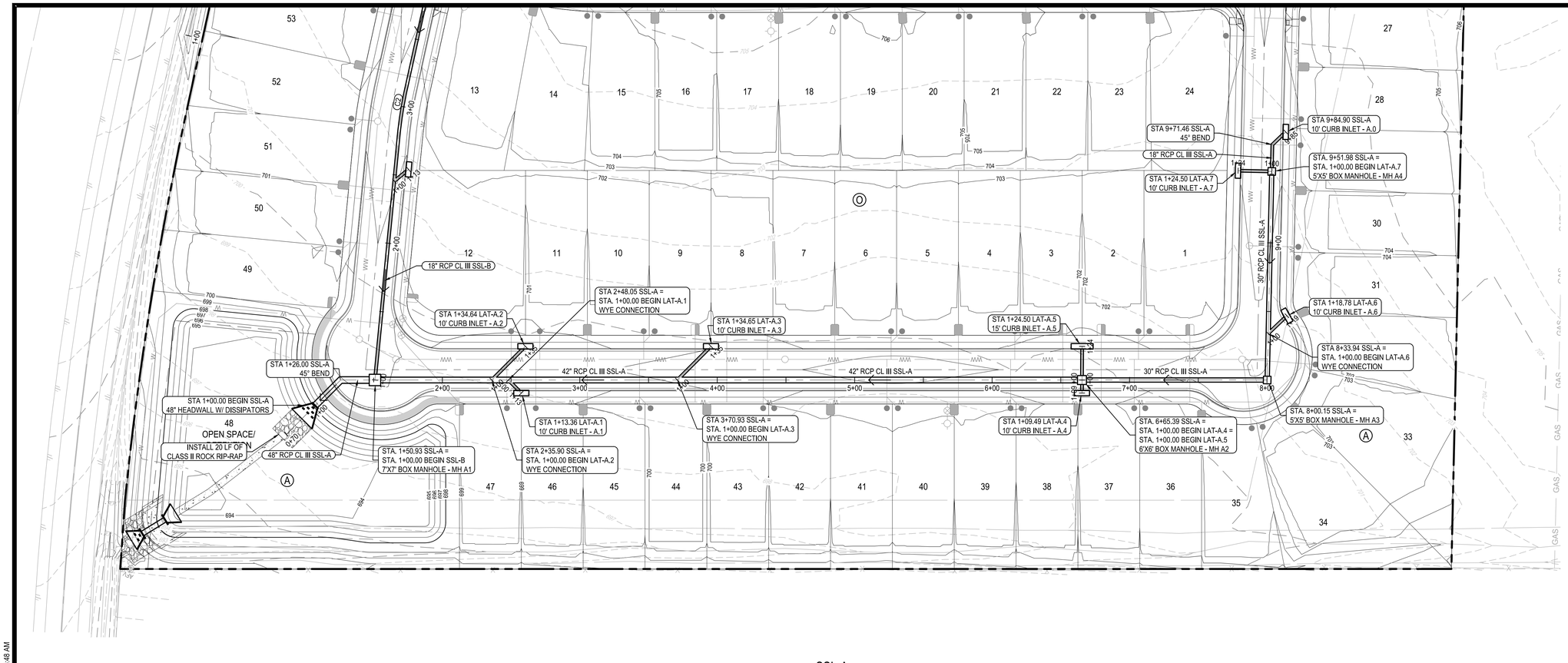

LEGEND

- PROPERTY BOUNDARY
- EXISTING MAJOR CONTOUR
- EXISTING MINOR CONTOUR
- PROPOSED MAJOR CONTOUR
- PROPOSED MINOR CONTOUR
- STORM SEWER FLOW DIRECTION
- PROPOSED MANHOLE
- PROPOSED 10' CURB INLET
- PROPOSED 4'X4' AREA INLET

NOTES:
1. ALL INLET WYE CONNECTIONS TO BE 45 DEGREES UNLESS OTHERWISE NOTED.

SSL-A

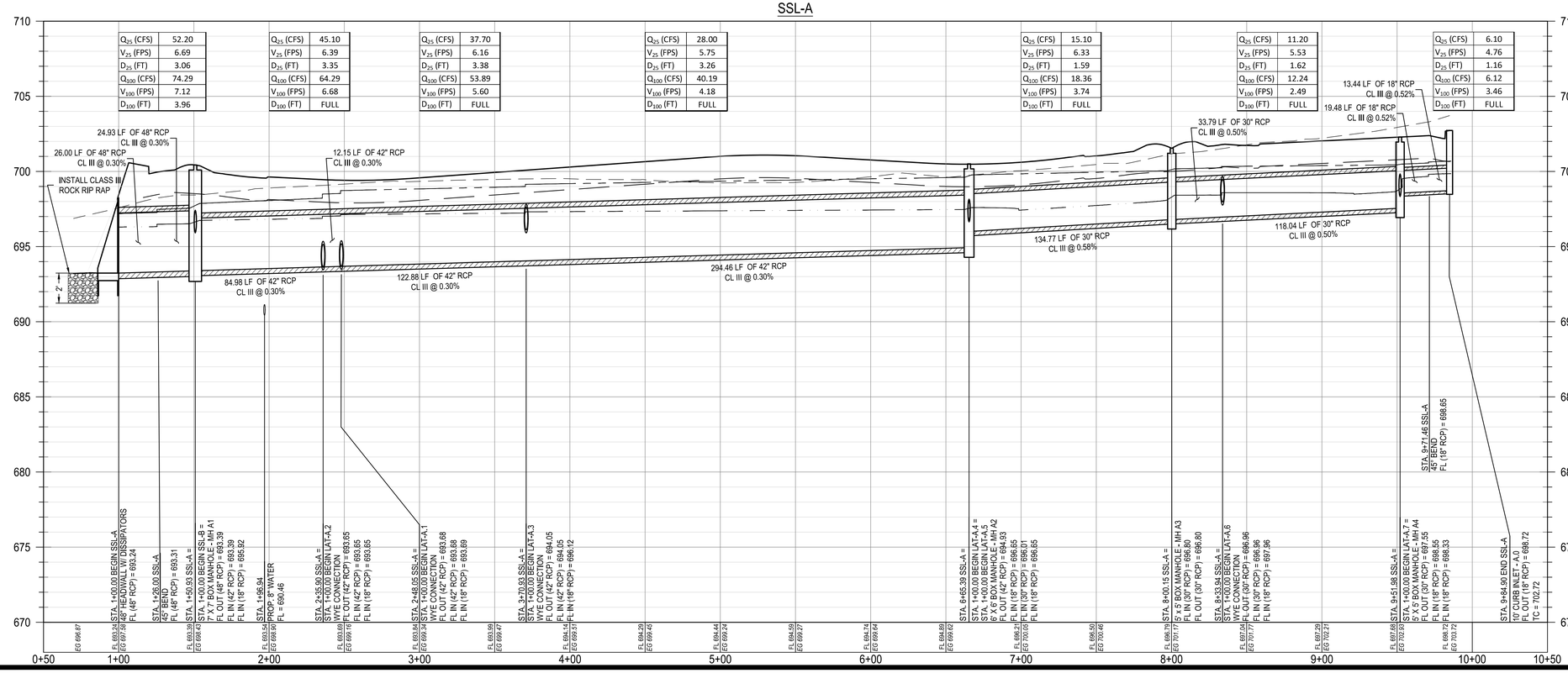

PROFILE LEGEND

- PROPOSED GRADE
- PROPOSED SUBGRADE
- EXISTING GRADE
- 100 YEAR HGL LINE
- 25 YEAR HGL LINE
- PROPOSED STORM LINE
- PROPOSED STORM CURB INLET
- PROPOSED STORM MANHOLE
- PROPOSED STORM BOX MANHOLE

REV	DESCRIPTION	DATE	APR
	Record Drawing		

DESIGNED BY: DAZ
REVIEWED BY: TMH
DRAWN BY: DAZ

BGE, INC.
1701 DIRECTORS BOULEVARD, SUITE 1000
AUSTIN, TX 78744
TBPE Registration No. F-1046
TEL: 512-879-0400 www.browngay.com

WILCO RANCH PHASE 3 SECTION 2
HUTTO, TEXAS

SSL-A PLAN AND PROFILE (1+00 TO END)

SUBMITTAL DATE: 12-10-2020

TIMOTHY M. HOLLOWAY
94848
LICENSED
PROFESSIONAL ENGINEER
8/3/2021

SHEET
16 OF 44

G:\TXC\Projects\Ashton_Woods\8022-00-Wilco_Ranch_Ph3_Sec2\LD\01_CADD\01_Shts\C-SP-STRM-P&P-PH 3-SEC 2.dwg Layout: SSL-A PLAN AND PROFILE (1+00 TO END) Plotted: 8/3/2021 8:35:48 AM

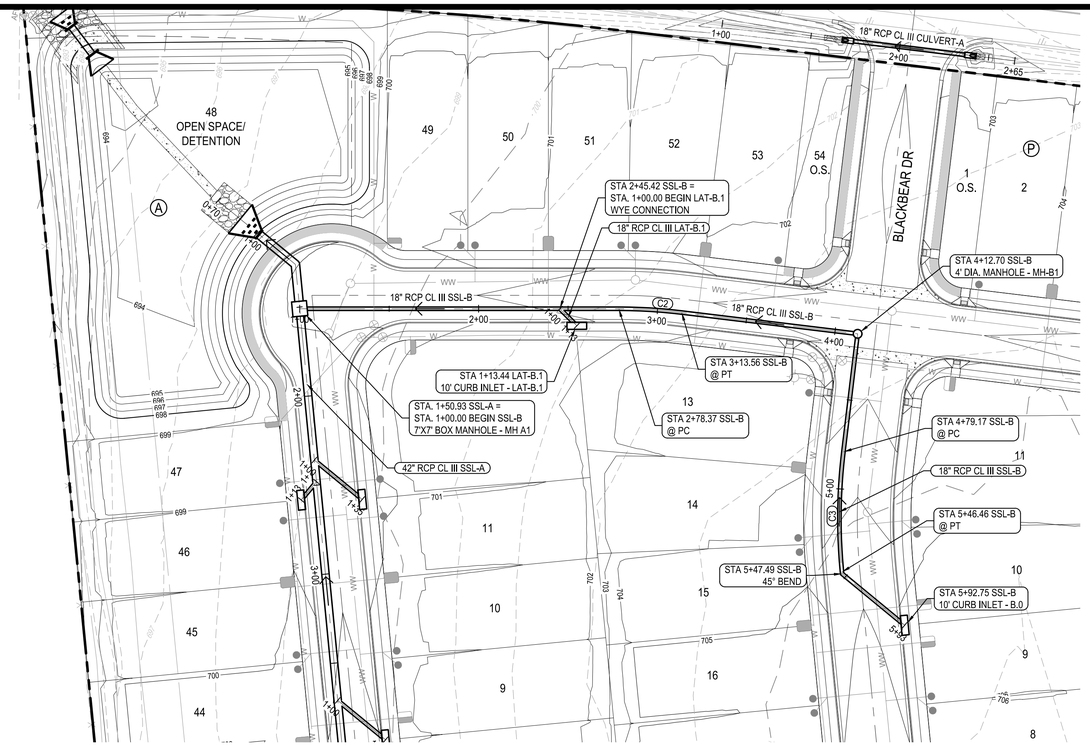

0 20' 40' 80'

SCALE: 1" = 40'

LEGEND

- PROPERTY BOUNDARY
- EXISTING MAJOR CONTOUR
- EXISTING MINOR CONTOUR
- PROPOSED MAJOR CONTOUR
- PROPOSED MINOR CONTOUR
- STORM SEWER FLOW DIRECTION
- PROPOSED MANHOLE
- PROPOSED 10' CURB INLET
- PROPOSED 4'X4' AREA INLET

NOTES:

1. ALL INLET WYE CONNECTIONS TO BE 45 DEGREES UNLESS OTHERWISE NOTED.

Curve Table: Alignments					
CURVE	DELTA ANGLE	RADIUS	ARC LENGTH	CHORD DIRECTION	CHORD DISTANCE
C2	6°53'37"	292.50'	35.19'	S12° 53' 35.92"E	35.17'
C3	12°26'14"	310.00'	67.29'	S74° 20' 05.39"W	67.16'

SSL-B

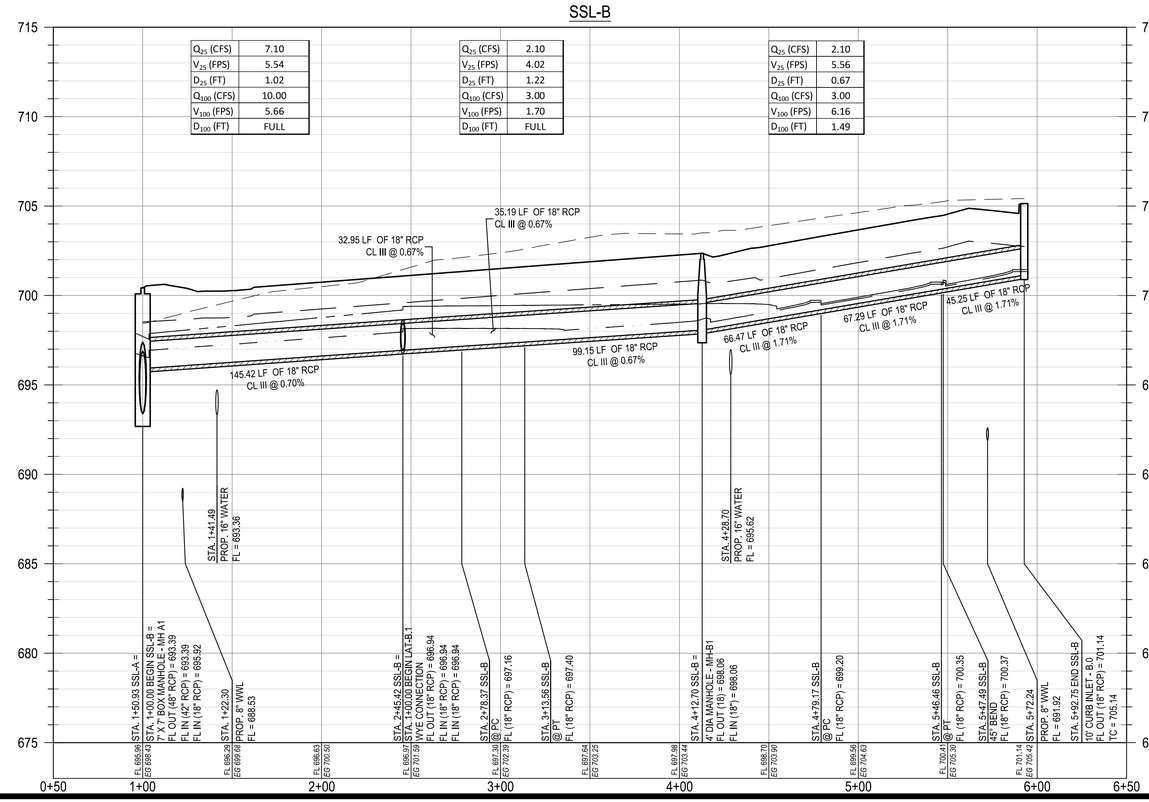

PROFILE LEGEND

- PROPOSED GRADE
- PROPOSED SUBGRADE
- EXISTING GRADE
- 100 YEAR HGL LINE
- 25 YEAR HGL LINE
- PROPOSED STORM LINE
- PROPOSED STORM CURB INLET
- PROPOSED STORM MANHOLE
- PROPOSED STORM BOX MANHOLE

REV	DESCRIPTION	DATE	APR
	Record Drawing		

DESIGNED BY: DAZ

REVIEWED BY: TMH

DRAWN BY: DAZ

BGE, INC.
1701 DIRECTORS BOULEVARD, SUITE 1000
AUSTIN, TX 78744
TBPE Registration No. F-1046
TEL: 512-879-0400 www.brownbgeg.com

WILCO RANCH PHASE 3 SECTION 2
HUTTO, TEXAS

SSL-B PLAN AND PROFILE (1+00 TO END)

SUBMITTAL DATE: 12-10-2020

TIMOTHY M. HOLLAND
94848
8/3/2021

SHEET
17 OF 44

G:\TXC\Projects\Ashton_Woods\80224-00-Wilco_Ranch_Ph3_Sec2\LD\01_CADD\01_Shts\C-SP-STRM-P&P-PH 3-SEC 2.dwg Layout: SSL-B PLAN AND PROFILE (1+00 TO END) Plotted: 8/3/2021 8:35:59 AM

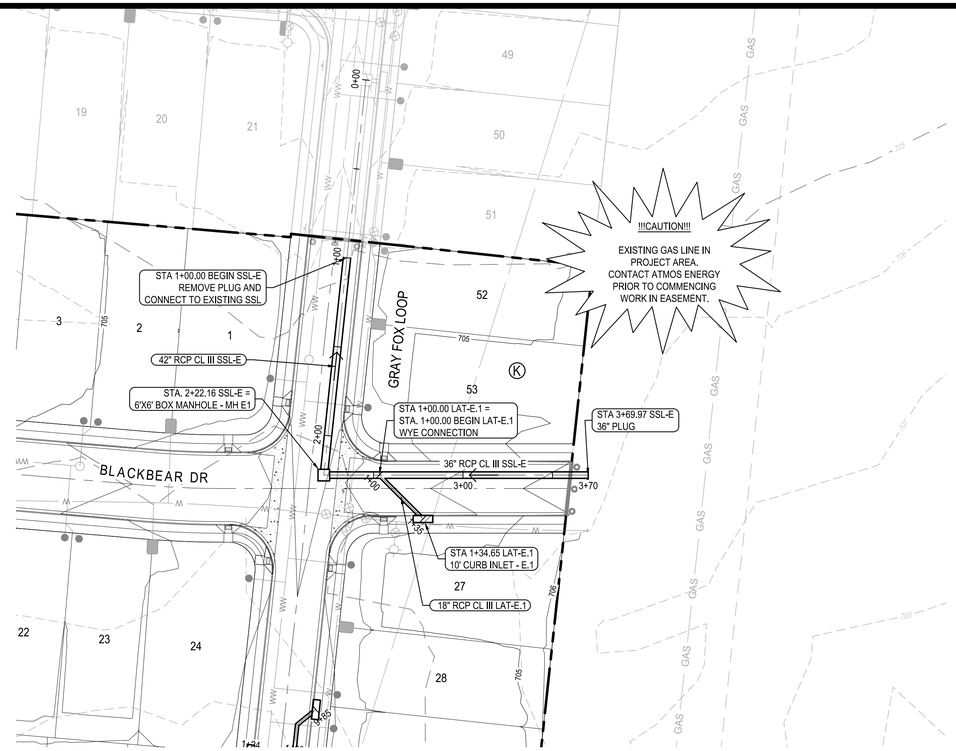

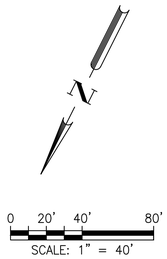

LEGEND

- PROPERTY BOUNDARY
- EXISTING MAJOR CONTOUR
- EXISTING MINOR CONTOUR
- PROPOSED MAJOR CONTOUR
- PROPOSED MINOR CONTOUR
- STORM SEWER FLOW DIRECTION
- PROPOSED MANHOLE
- PROPOSED 10' CURB INLET
- PROPOSED 4'X4' AREA INLET

NOTES:
1. ALL INLET WYE CONNECTIONS TO BE 45 DEGREES UNLESS OTHERWISE NOTED.

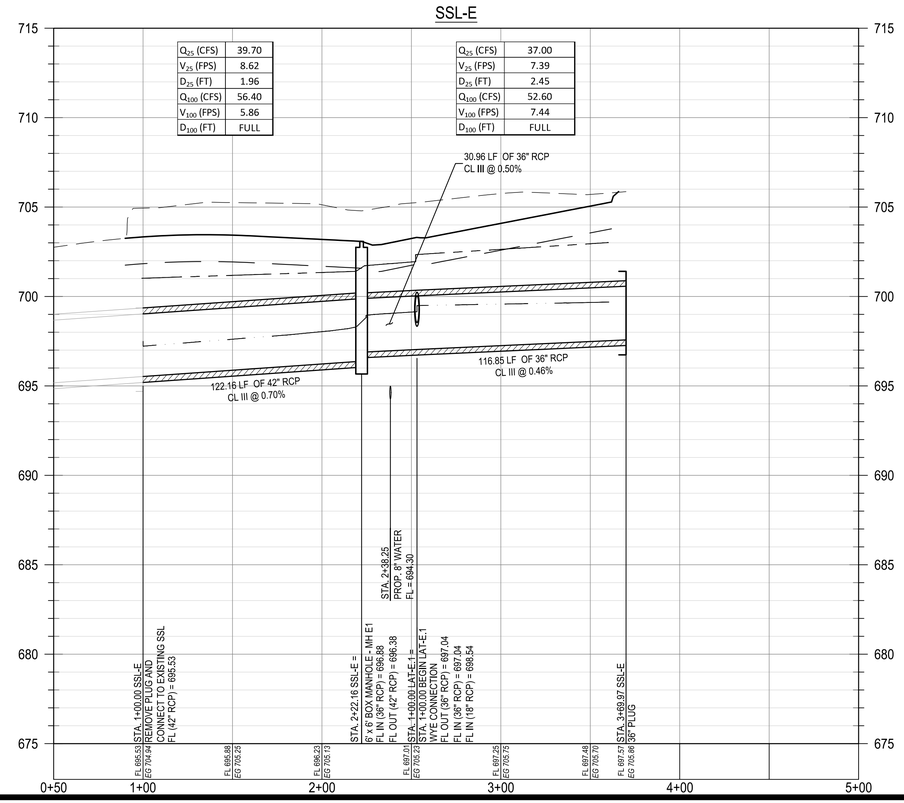

Q_{25} (CFS)	39.70
V_{25} (FPS)	8.62
D_{25} (FT)	1.96
Q_{100} (CFS)	56.40
V_{100} (FPS)	5.86
D_{100} (FT)	FULL

Q_{25} (CFS)	37.00
V_{25} (FPS)	7.39
D_{25} (FT)	2.45
Q_{100} (CFS)	52.60
V_{100} (FPS)	7.44
D_{100} (FT)	FULL

PROFILE LEGEND

- PROPOSED GRADE
- PROPOSED SUBGRADE
- EXISTING GRADE
- 100 YEAR HGL LINE
- 25 YEAR HGL LINE
- PROPOSED STORM LINE
- PROPOSED STORM CURB INLET
- PROPOSED STORM MANHOLE
- PROPOSED STORM BOX MANHOLE

REV	DATE	DESCRIPTION	APR
		Record Drawing	

DESIGNED BY:	DAZ
REVIEWED BY:	TMH
DRAWN BY:	DAZ

BGE, INC.
1701 DIRECTORS BOULEVARD, SUITE 1000
AUSTIN, TX 78744
TBPE Registration No. F-1046
TEL: 512-879-0400 www.brownbgey.com

WILCO RANCH PHASE 3 SECTION 2
HUTTO, TEXAS

SSL-E PLAN AND PROFILE (1+00 TO END)

SUBMITTAL DATE: 12-10-2020

STATE OF TEXAS
TIMOTHY M. HOLLAND
94848
LICENSED PROFESSIONAL ENGINEER
8/3/2021

SHEET
18 OF 44

G:\TXC\Projects\Ashton_Woods\80224-00-Wilco_Ranch_Ph3_Sec2\LDV01_CADD\01_Sitis\C-SP-STRM-P&P-PH 3-SEC 2.dwg Layout: SSL-E PLAN AND PROFILE (1+00 TO END) Plotted: 8/3/2021 8:36:06 AM

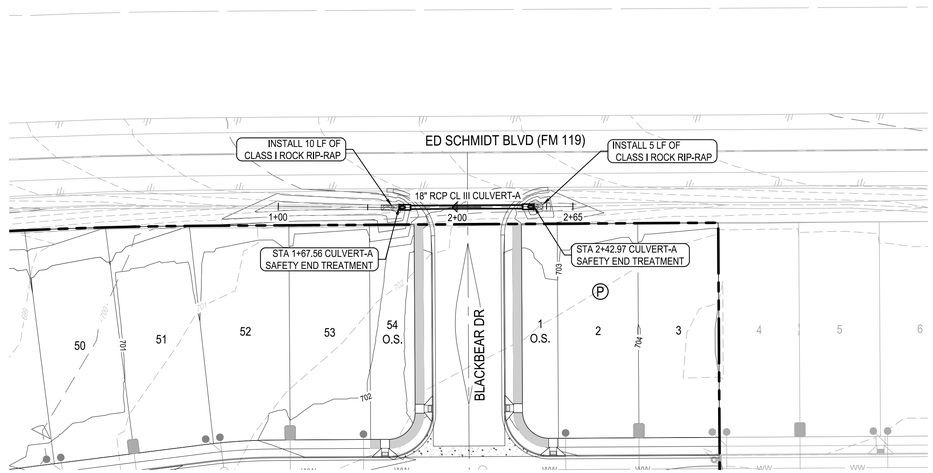

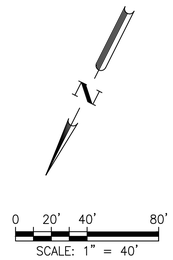

LEGEND

- PROPERTY BOUNDARY
- EXISTING MAJOR CONTOUR
- EXISTING MINOR CONTOUR
- PROPOSED MAJOR CONTOUR
- PROPOSED MINOR CONTOUR
- STORM SEWER FLOW DIRECTION
- PROPOSED MANHOLE
- PROPOSED 10' CURB INLET
- PROPOSED 4'X4' AREA INLET

NOTES:
1. ALL INLET WYE CONNECTIONS TO BE 45 DEGREES UNLESS OTHERWISE NOTED.

PROFILE LEGEND

- PROPOSED GRADE
- PROPOSED SUBGRADE
- EXISTING GRADE
- 100 YEAR HGL LINE
- 25 YEAR HGL LINE
- PROPOSED STORM LINE
- PROPOSED STORM CURB INLET
- PROPOSED STORM MANHOLE
- PROPOSED STORM BOX MANHOLE

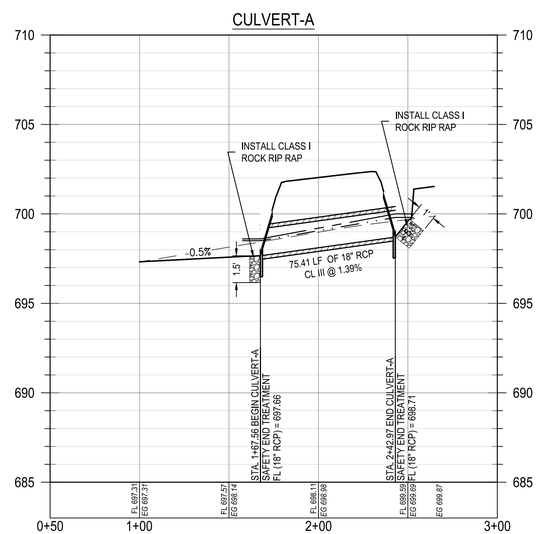

						APR
						DATE
				Record Drawing		DESCRIPTION
◁	◁	◁	◁	◁	◁	REV

DESIGNED BY:	DAZ
REVIEWED BY:	TMH
DRAWN BY:	DAZ

BGE
BGE, INC.
1701 DIRECTORS BOULEVARD, SUITE 1000
AUSTIN, TX 78744
TBPE Registration No. F-1046
TEL: 512-879-0400 www.brownbge.com

WILCO RANCH PHASE 3 SECTION 2
HUTTO, TEXAS

CULVERT PLAN AND PROFILE
(1+00 TO END)

SUBMITTAL DATE: 12-10-2020

STATE OF TEXAS
TIMOTHY M. HOLLAND
94848
LICENSED
PROFESSIONAL ENGINEER
8/3/2021

SHEET
19 OF 44

G:\TXC\Projects\Ashton_Woods\8022-00-Wilco_Ranch_Ph3_Sec2\LD\01_CADD\01_Sht\C-SP-STRM-P&P-PH 3-SEC 2.dwg Layout: CULVERT PLAN AND PROFILE (1+00 TO END) Plotted: 8/3/2021 8:36:13 AM

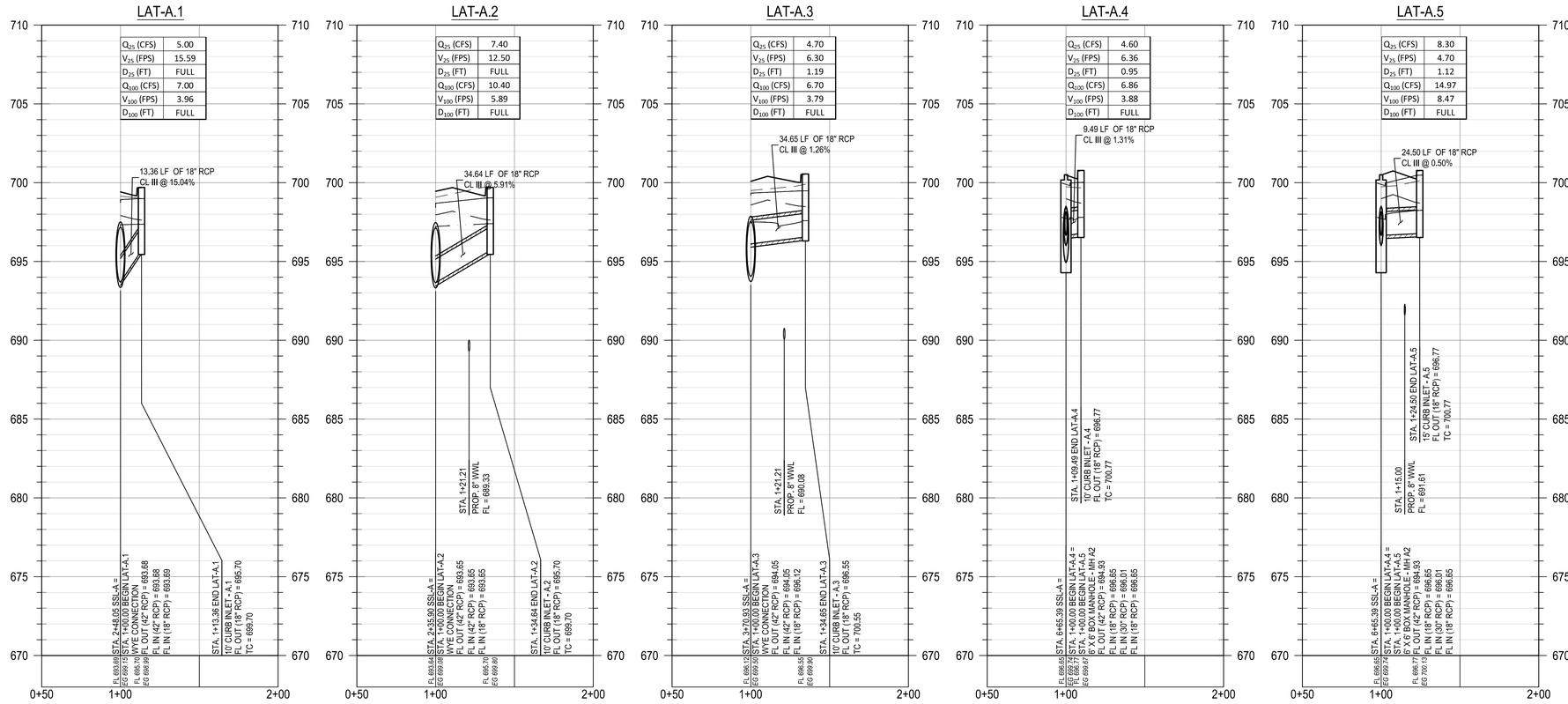

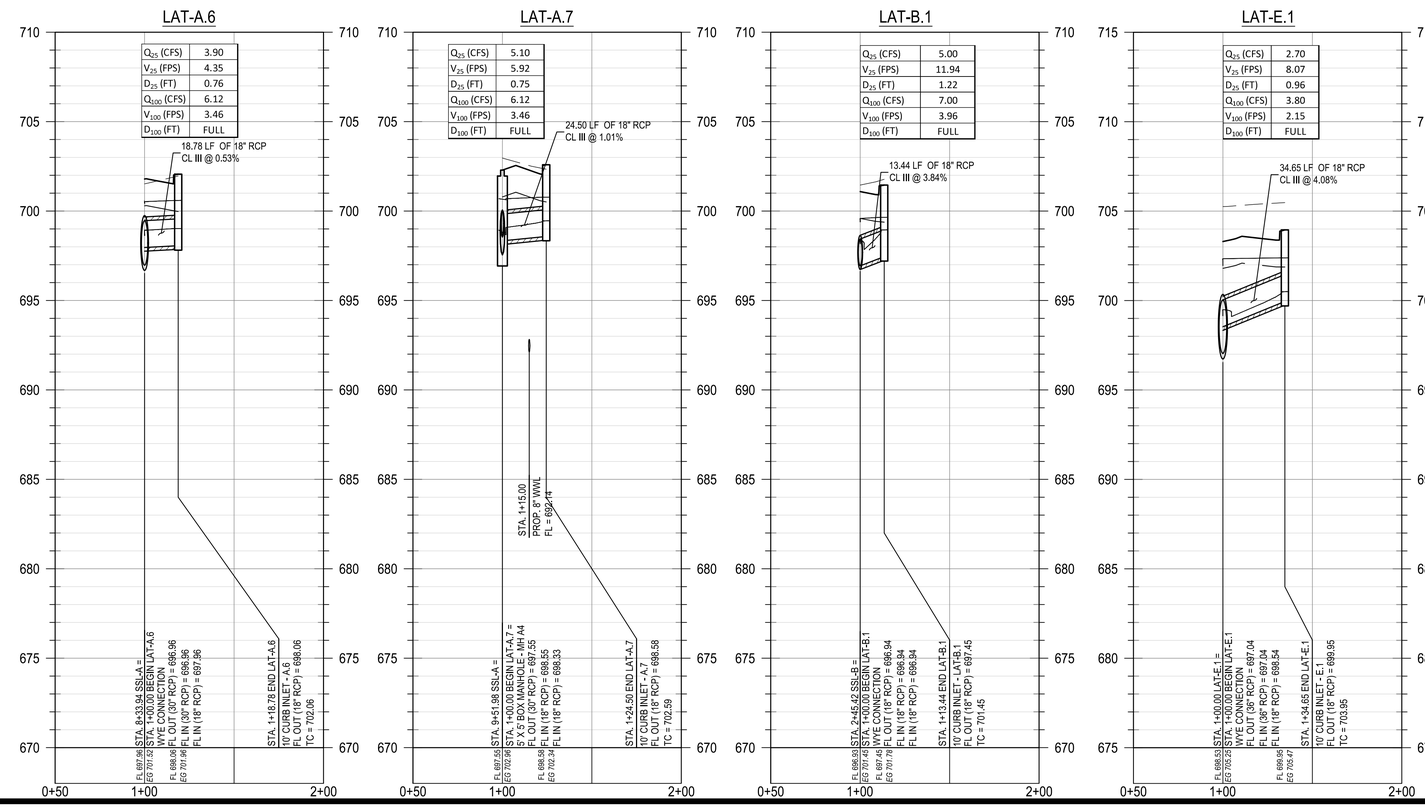

REV	DESCRIPTION	DATE	APR
△	Record Drawing		
△			
△			
△			
△			
△			

DESIGNED BY: DAZ
REVIEWED BY: TMH
DRAWN BY: DAZ

BGE, INC.
1701 DIRECTORS BOULEVARD, SUITE 1000
AUSTIN, TX 78744
TBPE Registration No. F-1046
TEL: 512-879-0400 www.brownjay.com

WILCO RANCH PHASE 3 SECTION 2
HUTTO, TEXAS

LATS

SUBMITTAL DATE: 12-10-2020

STATE OF TEXAS
TIMOTHY M. HOLLAND
94848
LICENSED
PROFESSIONAL ENGINEER
8/3/2021

SHEET
20 OF 44

G:\TXCI\Projects\Ashton_Woods\80224-00-Wilco_Ranch_Ph3_Sec2\LDV01_CADD\01_Site\C-SP-STRM-PAR-PH 3-SEC 2.dwg Layout: LATS Plotted: 8/3/2021 8:38:23 AM

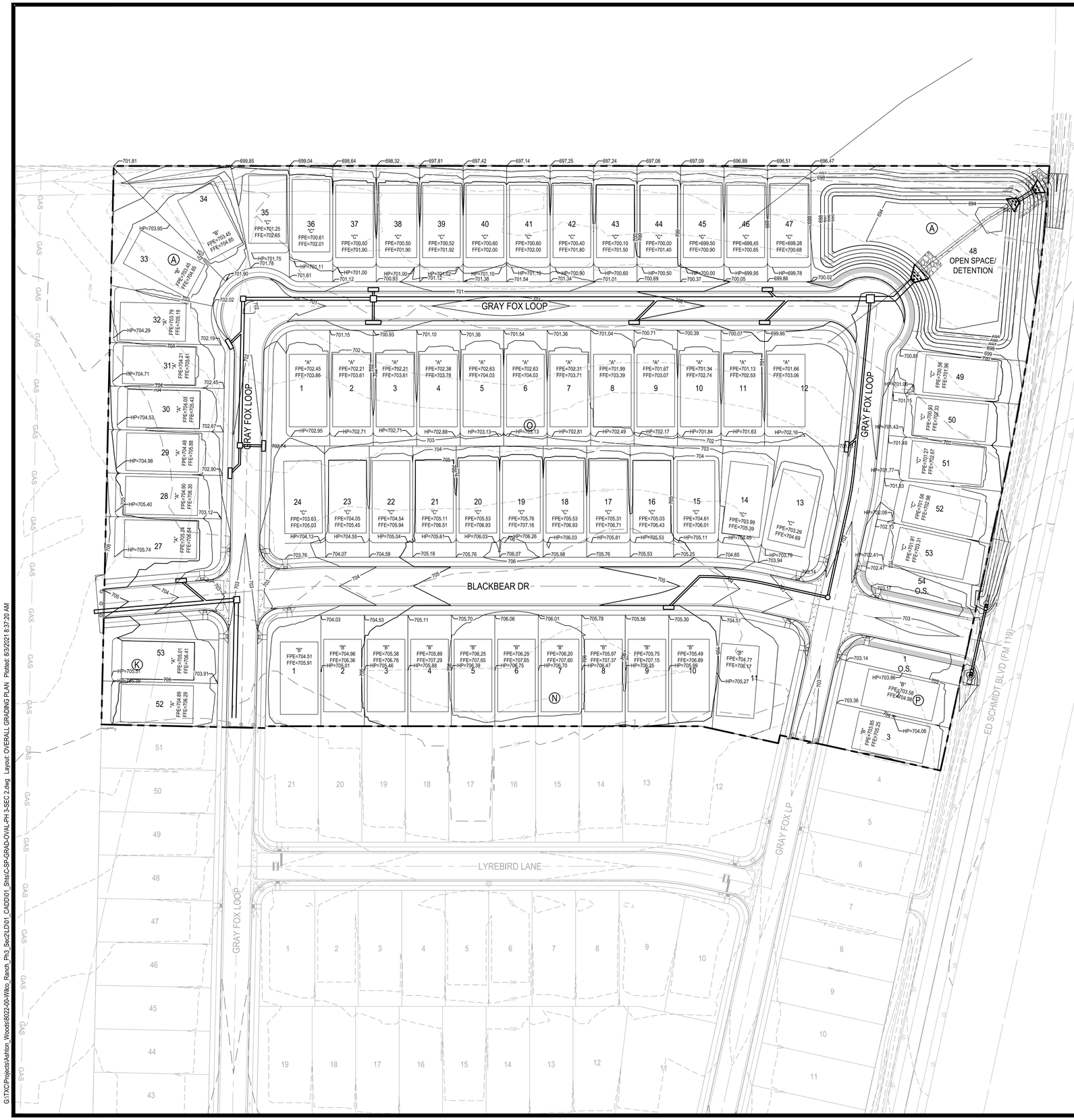

NOTES:

1. THIS EXHIBIT IS PREPARED FOR THE BUILDER FOR THE PURPOSE OF COMPARING THE FOUNDATION FOOT PRINT OF THE STYLE OF HOME WITH THE SETBACKS AND EASEMENTS OF THE PROPOSED AND/OR EXISTING LOTS. BEFORE A HOUSE SALE IS FINALIZED THE BUILDER SHOULD VERIFY THAT THE FOUNDATION PLAN FOR THE MODEL CHOSEN IS EQUAL TO OR LESS THAN THE BUILDING ENVELOPE SHOWN ON THIS PLAN.
2. DIMENSIONING INFORMATION SHOWN ON THE PLAN WA TAKEN FROM DATA THAT WAS STORED OR TRANSMITTED ELECTRONICALLY. ALL DIMENSIONS SHOULD BE VERIFIED USING RECORDED PLAT OF SAID PROPERTY.
3. ALL EASEMENT AND SETBACKS SHOULD BE VERIFIED USING THE RECORDED PLAT AND DEED RESTRICTIONS OF SAID PROPERTY.
4. LOCATION OF DRIVEWAY IS SHOWN FOR GRAPHICAL PURPOSES ONLY. ACTUAL LOCATION OF DRIVEWAY TO BE DETERMINED BY THE BUILDER BASED ON FIELD CONDITIONS.
5. CONTRACTOR TO PROVIDE 0.2' HOLD-DOWN FOR AREAS OUTSIDE OF THE BUILDING PAD TO PROVIDE FOR SOD INSTALLATION.
6. FFE = FPE + 1.4'
7. RETAINING WALLS OVER FOUR FEET IN HEIGHT, MEASURED FROM THE BOTTOM OF THE FOOTING TO THE TOP OF WALL SHALL BE ENGINEERED AND WILL REQUIRE A SEPARATE PERMIT. (UNIFORM BUILDING CODE 106.2.5)

N

0 25' 50' 100'

SCALE: 1" = 50'

LEGEND

- PROPERTY BOUNDARY
- EXISTING MAJOR CONTOUR
- EXISTING MINOR CONTOUR
- PROPOSED MAJOR CONTOUR
- PROPOSED MINOR CONTOUR

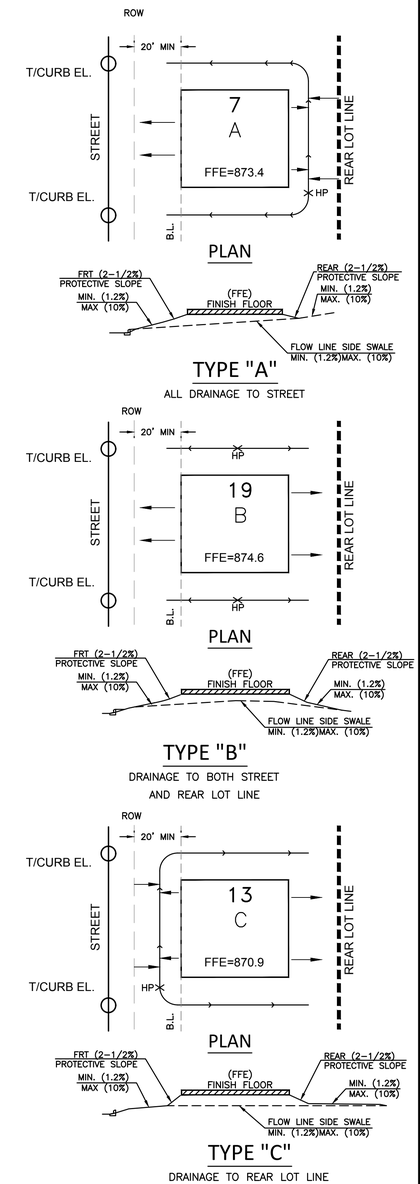

REV	DESCRIPTION	DATE	APR
	Record Drawing		

DESIGNED BY: DAZ
REVIEWED BY: TMH
DRAWN BY: DAZ

BGE
BGE, INC.
1701 DIRECTORS BOULEVARD, SUITE 1000
AUSTIN, TX 78744
TBPE Registration No. F-1046
TEL: 512-879-0400 www.browngay.com

WILCO RANCH PHASE 3 SECTION 2
HUTTO, TEXAS

OVERALL GRADING PLAN

SUBMITTAL DATE: 12-10-2020

STATE OF TEXAS
TIMOTHY M. HOLLAND
94848
LICENSED
PROFESSIONAL ENGINEER
3/3/2021

SHEET
21 OF 44

G:\TXC\Projects\Ashton_Woods\8022-00-Wilco_Ranch_Ph3_Sec2\LD\01_CADD\01_Shts\C-SP-GRAD-OVAL-PH 3-SEC 2.dwg Layout: OVERALL GRADING PLAN Plotted: 8/3/2021 8:37:20 AM

Storage Table		
Elevations (ft)	Area (sf)	Volume (cf)
692.75	0.00	0
693.00	871.20	109
694.00	12109.68	6,599
695.00	16639.92	20,974
696.00	19166.40	38,877
697.00	21780.00	59,351
698.00	24567.84	82,524

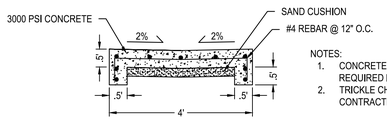

TYPICAL CONCRETE TRICKLE CHANNEL
N.T.S.

NOTES:
1. CONCRETE TRICKLE CHANNELS ARE REQUIRED IN ALL UN-LINED CHANNELS.
2. TRICKLE CHANNELS SHALL HAVE CONTRACTION JOINTS EVERY 20'.

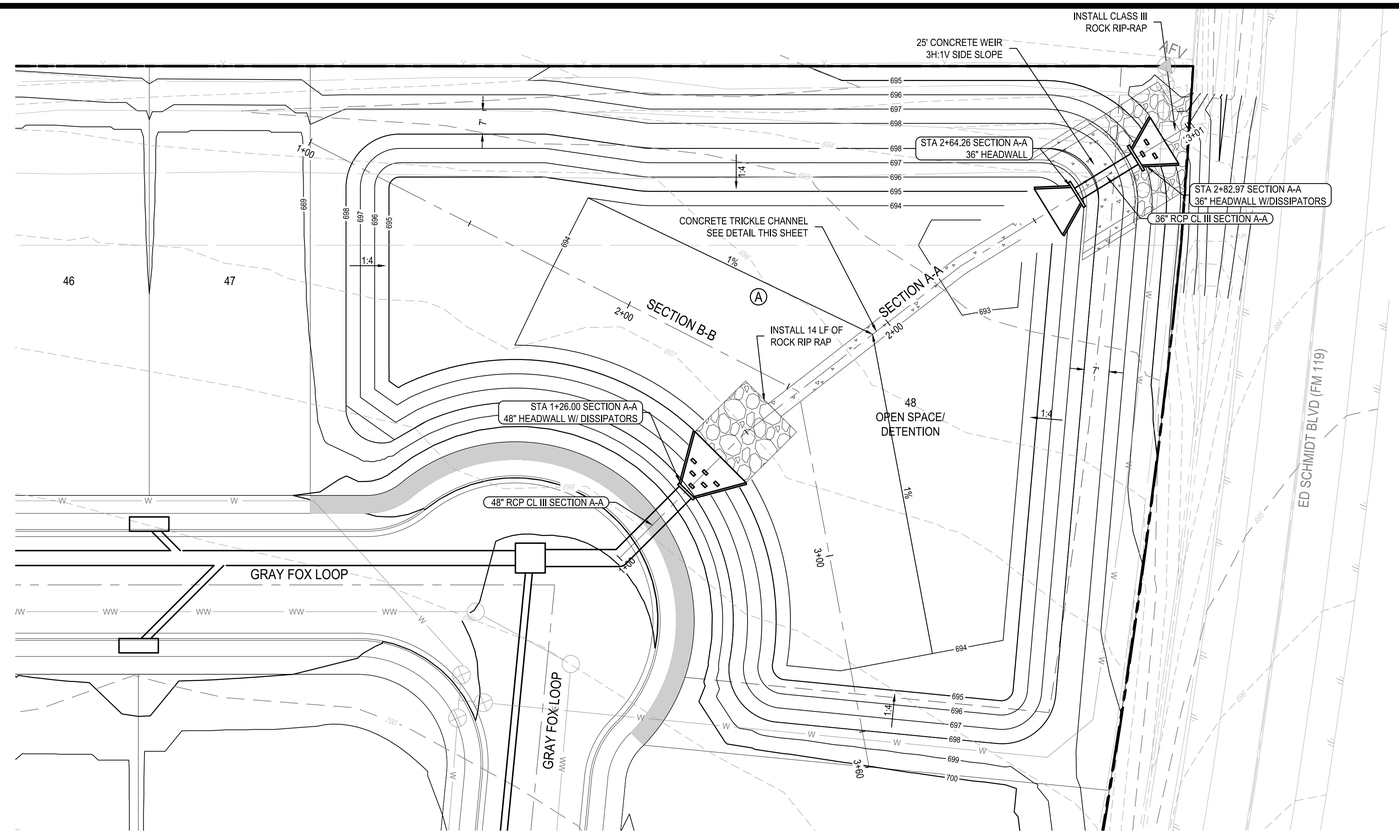

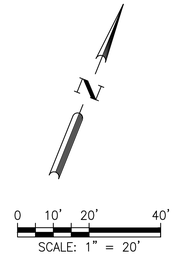

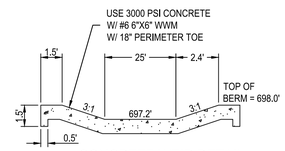

CONCRETE WEIR DETAIL
NOT TO SCALE

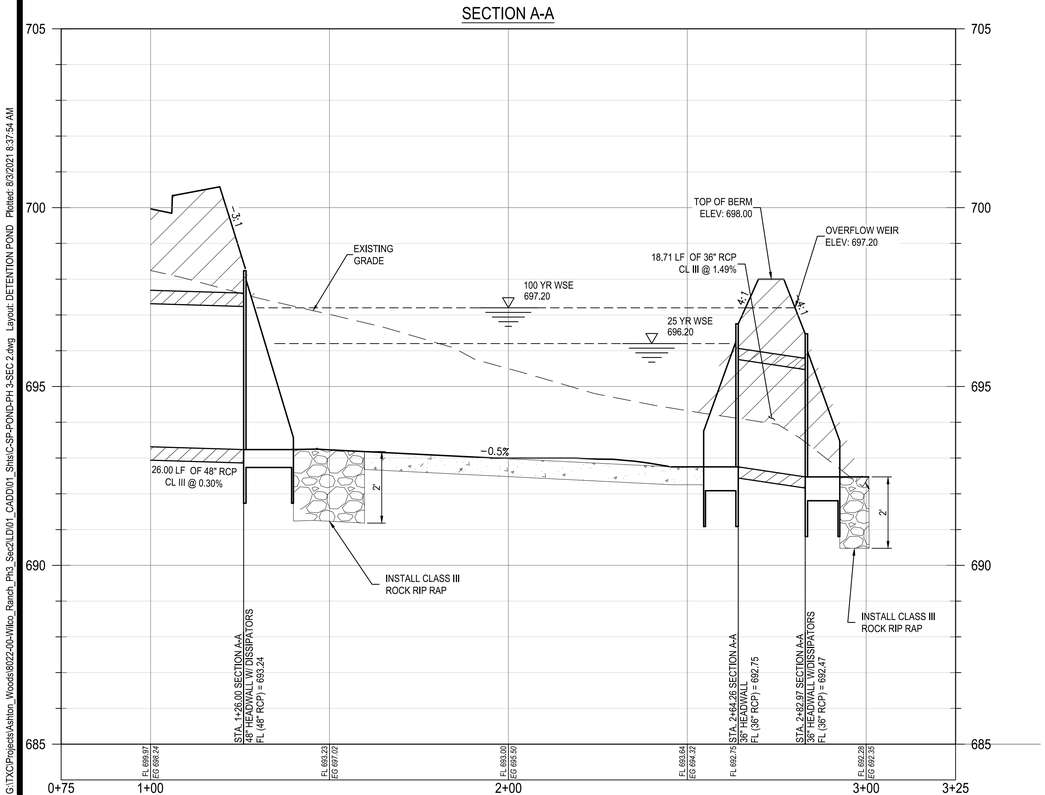

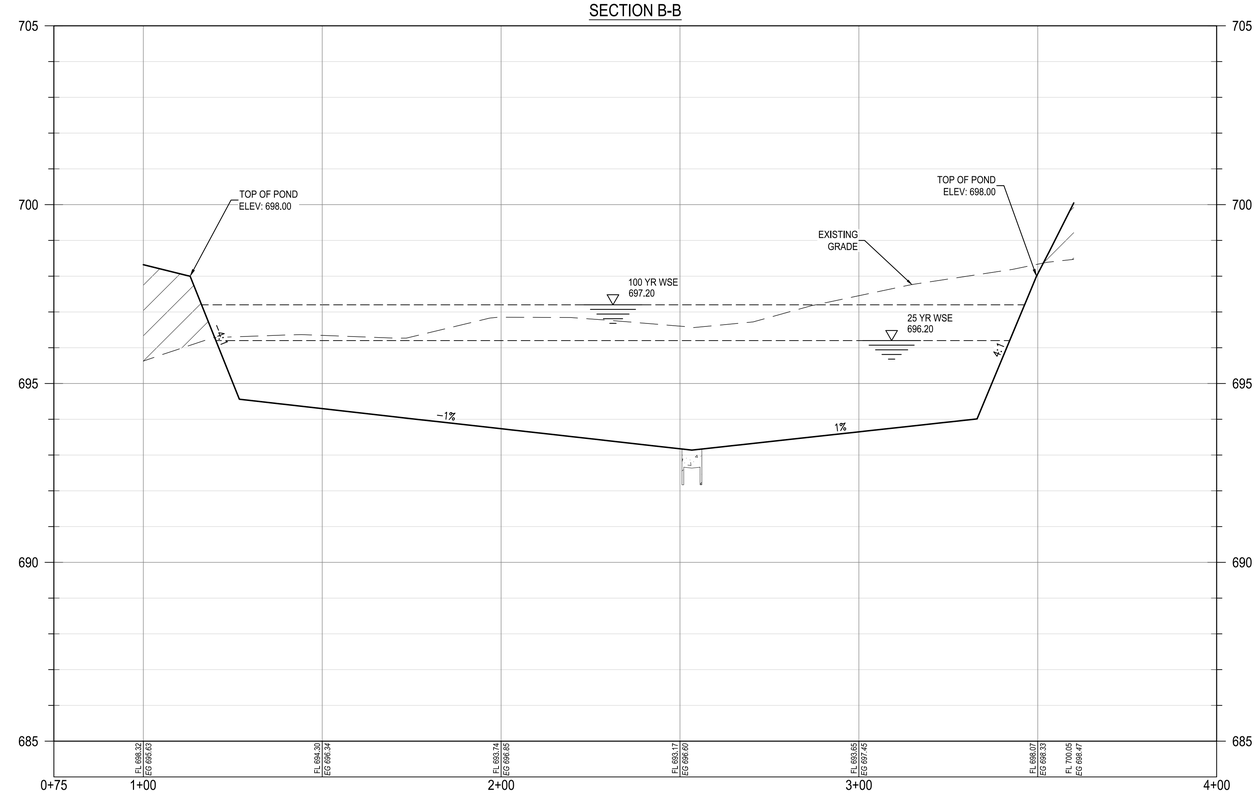

REV	DESCRIPTION	DATE	APR
	Record Drawing		

DESIGNED BY: DAZ
REVIEWED BY: TMH
DRAWN BY: DAZ

BGE, INC.
1701 DIRECTORS BOULEVARD, SUITE 1000
AUSTIN, TX 78744
TBPE Registration No. F-1046
TEL: 512-879-0400 www.browngay.com

WILCO RANCH PHASE 3 SECTION 2
HUTTO, TEXAS

DETENTION POND

SUBMITTAL DATE: 12-10-2020

STATE OF TEXAS
TIMOTHY M. HOLLAND
94848
LICENSED PROFESSIONAL ENGINEER
8/3/2021

SHEET
22 OF 44

G:\TX\CP\projects\Ashton_Woods\8022-00-Wilco_Ranch_Ph3_Sec2\LD\01_CADD\01_Shts\C-SP-POND-PH 3-SEC 2.dwg Layout: DETENTION POND Plotted: 8/3/2021 8:37:54 AM

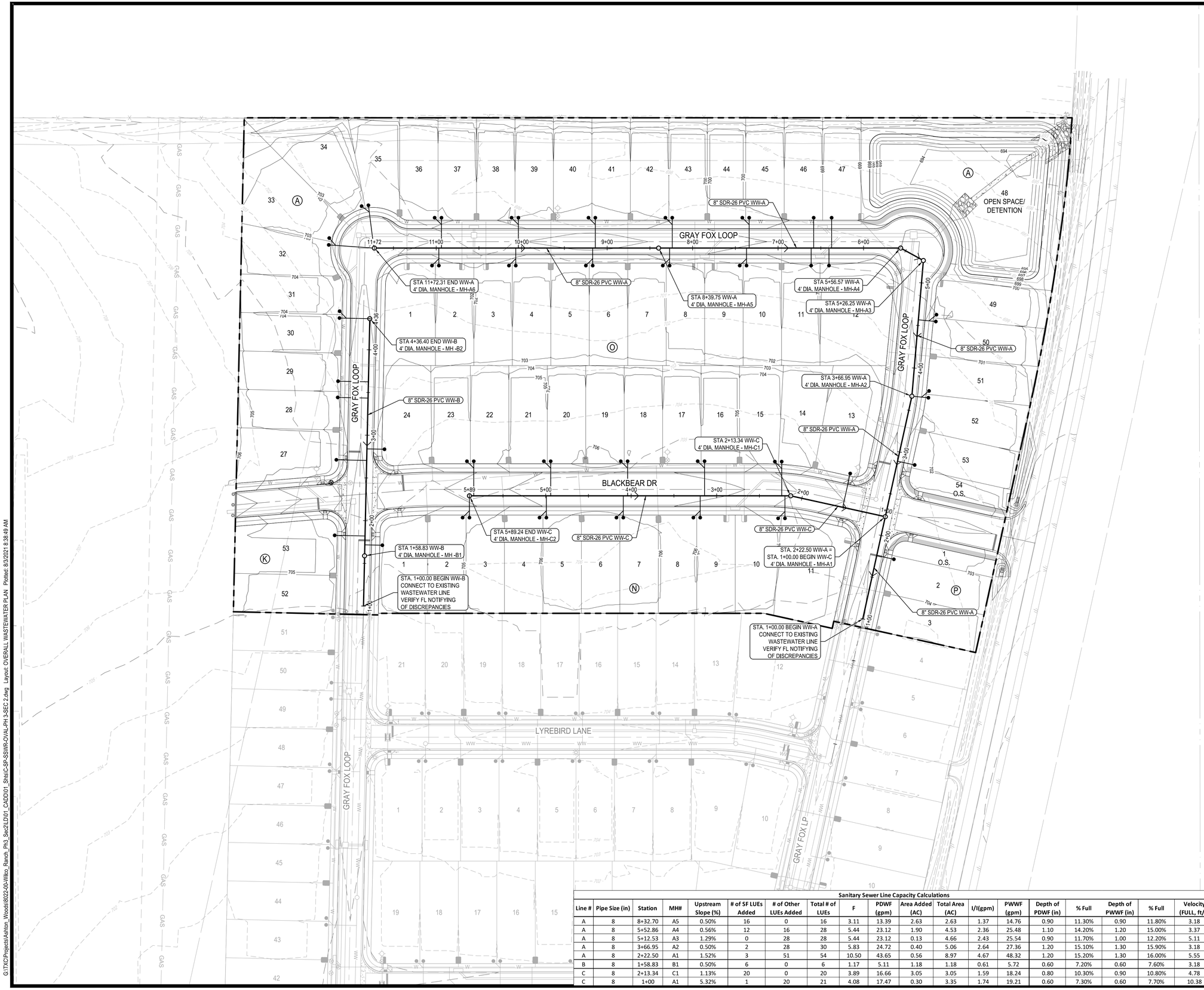

N

0 25' 50' 100'

SCALE: 1" = 50'

LEGEND

- PROPERTY BOUNDARY
- PROPOSED RIGHT OF WAY
- EXISTING MAJOR CONTOUR
- EXISTING MINOR CONTOUR
- PROPOSED MAJOR CONTOUR
- PROPOSED MINOR CONTOUR
- WASTEWATER LINE
- WASTEWATER MANHOLE
- DIRECTION OF FLOW
- DOUBLE WASTEWATER SERVICE
- SINGLE WASTEWATER SERVICE
- DOUBLE WATER SERVICE
- SINGLE WATER SERVICE

* ALL WASTEWATER SYMBOLS ARE NOT TO SCALE, AND ARE ONLY SHOWN FOR ILLUSTRATION PURPOSES. REFER TO DETAILS SHOWN IN THIS PLAN SET.

NOTE:

1. ALL ITEMS ARE TO BE FURNISHED AND INSTALLED BY CONTRACTOR. REFERENCE CONSTRUCTION DETAILS SHEETS FOR ADDITIONAL INFORMATION.
2. ALL GRAVITY LINES ARE TO BE INSTALLED ROM DOWNSTREAM TO UPSTREAM.
3. ALL WASTEWATER LINES SHALL BE PVC SDR-26 CONFORMING TO ASTM D30304 WITH MINIMUM PIPE STIFFNESS OF 115 PSI AS DETERMINED BY ASTM D2412.
4. AT ALL WATER LINE CROSSINGS, WASTEWATER MAIN SHALL BE ASTM 2241, SDR-26 CLASS 160 OR BETTER PVC FOR MINIMUM 20 FEET CENTERED ON WATER LINE.
5. CONTRACTOR SHALL MAINTAIN A MINIMUM SEPARATION DISTANCE IN ALL DIRECTIONS OF NINE FEET BETWEEN PROPOSED WATERLINE AND WASTEWATER COLLECTION FACILITIES INCLUDING MANHOLES. IF THIS DISTANCE CANNOT BE MAINTAINED, CONTRACTOR MUST IMMEDIATELY NOTIFY PROJECT ENGINEER FOR FURTHER DIRECTION.
6. TRACER TAPE SHALL BE PLACED ABOVE ALL PLASTIC PIPES.
7. CAUTION: CONTRACTOR TO VERIFY ALL EXISTING UTILITIES VERTICALLY AND HORIZONTALLY PRIOR TO CONSTRUCTION. CONTRACTOR TO NOTIFY THE ENGINEER IMMEDIATELY OF ANY DISCREPANCIES.
8. CONTRACTOR TO PLACE MANHOLES AND CLEANOUTS OUTSIDE OF VALLEY GUTTERS AND CURBS.

Sanitary Sewer Line Capacity Calculations

Line #	Pipe Size (in)	Station	MH#	Upstream Slope (%)	# of SF LUEs Added	# of Other LUEs Added	Total # of LUEs	F	PDWF (gpm)	Area Added (AC)	Total Area (AC)	I/I(gpm)	PWWF (gpm)	Depth of PDWF (in)	% Full	Depth of PWWF (in)	% Full	Velocity (FULL, ft/s)
A	8	8+32.70	A5	0.50%	16	0	16	3.11	13.39	2.63	2.63	1.37	14.76	0.90	11.30%	0.90	11.80%	3.18
A	8	5+52.86	A4	0.56%	12	16	28	5.44	23.12	1.90	4.53	2.36	25.48	1.10	14.20%	1.20	15.00%	3.37
A	8	5+12.53	A3	1.29%	0	28	28	5.44	23.12	0.13	4.66	2.43	25.54	0.90	11.70%	1.00	12.20%	5.11
A	8	3+66.95	A2	0.50%	2	28	30	5.83	24.72	0.40	5.06	2.64	27.36	1.20	15.10%	1.30	15.90%	3.18
A	8	2+22.50	A1	1.52%	3	51	54	10.50	43.65	0.56	8.97	4.67	48.32	1.20	15.20%	1.30	16.00%	5.55
B	8	1+58.83	B1	0.50%	6	0	6	1.17	5.11	1.18	1.18	0.61	5.72	0.60	7.20%	0.60	7.60%	3.18
C	8	2+13.34	C1	1.13%	20	0	20	3.89	16.66	3.05	3.05	1.59	18.24	0.80	10.30%	0.90	10.80%	4.78
C	8	1+00	A1	5.32%	1	20	21	4.08	17.47	0.30	3.35	1.74	19.21	0.60	7.30%	0.60	7.70%	10.38

REV	DESCRIPTION	DATE	APR
	Record Drawing		

DESIGNED BY: DAZ
REVIEWED BY: TMH
DRAWN BY: DAZ

BGE, INC.
1701 DIRECTORS BOULEVARD, SUITE 1000
AUSTIN, TX 78744
TBPE Registration No. F-1046
TEL: 512-879-0400 www.bgeinc.com

WILCO RANCH PHASE 3 SECTION 2
HUTTO, TEXAS

OVERALL WASTEWATER PLAN

SUBMITTAL DATE: 12-10-2020

STATE OF TEXAS
TIMOTHY M. HOLLAND
94848
LICENSED
PROFESSIONAL ENGINEER
9/9/2021

SHEET
23 OF 44

G:\TXC\Projects\Ashton_Woods\80022-00-Wilco_Ranch_Ph3_Sec2\LD\01_CADD\01_Shts\C-SP-SSWR-OVAL-PH 3-SEC 2.dwg Layout: OVERALL WASTEWATER PLAN Plotted: 8/3/2021 8:38:49 AM

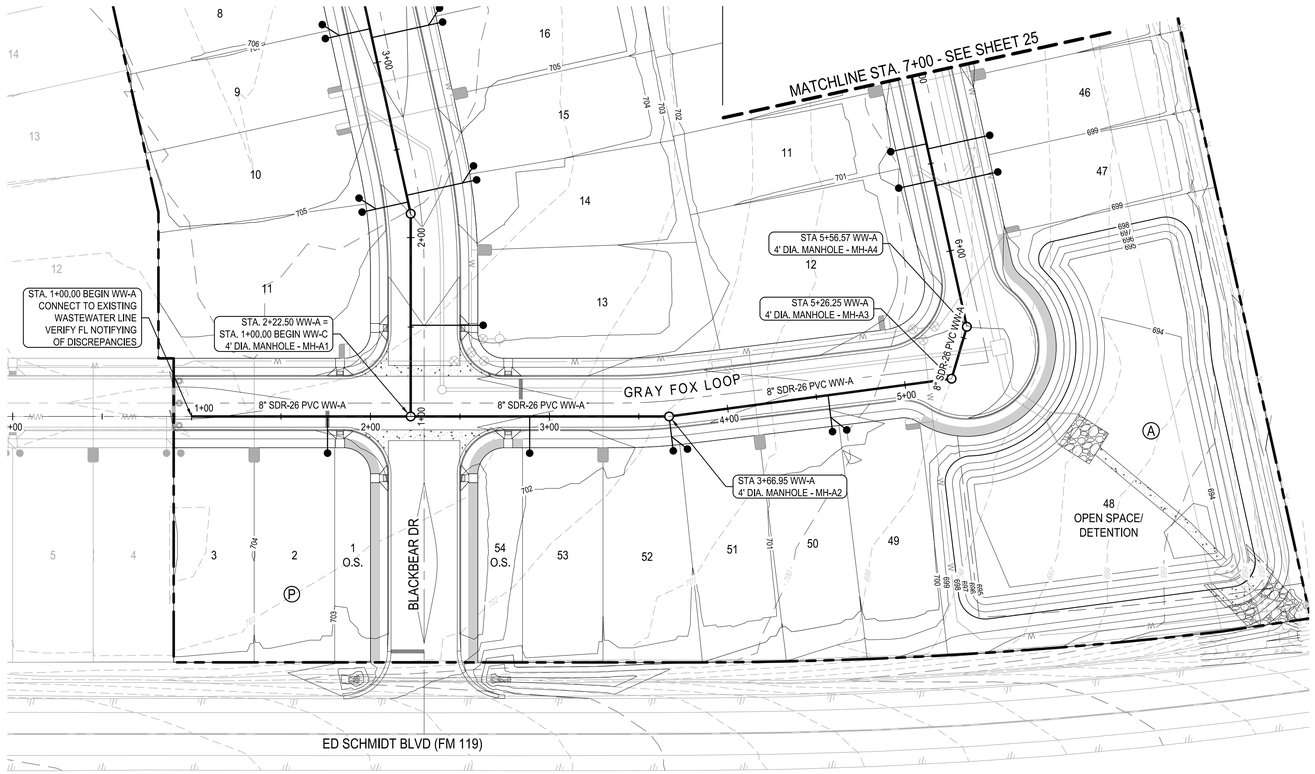

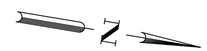

0 20' 40' 80'
SCALE: 1" = 40'

LEGEND

- PROPERTY BOUNDARY
- PROPOSED RIGHT OF WAY
- EXISTING MAJOR CONTOUR
- EXISTING MINOR CONTOUR
- PROPOSED MAJOR CONTOUR
- PROPOSED MINOR CONTOUR
- WASTEWATER LINE
- WASTEWATER MANHOLE
- DIRECTION OF FLOW
- DOUBLE WASTEWATER SERVICE
- SINGLE WASTEWATER SERVICE
- DOUBLE WATER SERVICE
- SINGLE WATER SERVICE

* ALL WASTEWATER SYMBOLS ARE NOT TO SCALE, AND ARE ONLY SHOWN FOR ILLUSTRATION PURPOSES. REFER TO DETAILS SHOWN IN THIS PLAN SET.

NOTE:

1. ALL MANHOLES SHALL BE COATED AND VACUUM TESTED.
2. ALL OFFSITE WASTEWATER MANHOLES SHALL HAVE MARKERS.
3. TOPS OF MANHOLES UNDER PAVEMENT SHALL BE ADJUSTED TO MATCH FINISH GRADES PRIOR TO ACCEPTANCE OF WORK.
4. CORE EXISTING MANHOLE, INSERT GASKET AND PROVIDE PRECO GROUT SEAL INSIDE AND OUR, OR APPROVED EQUAL.
5. ALL WASTEWATER LINES SHALL BE PVC SDR-26 CONFORMING TO ASTM D3034 WITH MINIMUM PIPE STIFFNESS OF 115 PSI AS DETERMINED BY ASTM D2412.
6. AT ALL WATERLINE CROSSINGS, WASTEWATER MAIN SHALL BE ASTM 2241, SDR-26CLASS 160 OR BETTER PVC FOR MINIMUM 20 FEET CENTERED ON THE WATERLINE.
7. CONTRACTOR SHALL MAINTAIN A MINIMUM SEPARATION DISTANCE IN ALL DIRECTIONS OF NINE FEET BETWEEN PROPOSED WATERLINE AND WASTEWATER COLLECTION FACILITIES INCLUDING MANHOLES. IF THIS DISTANCE CANNOT BE MAINTAINED, CONTRACTOR MUST IMMEDIATELY NOTIFY PROJECT ENGINEER FOR FURTHER DIRECTION.
8. ALL GRAVITY LINES ARE TO BE INSTALLED FROM DOWNSTREAM TO UPSTREAM.
9. TRACER TAPE SHALL BE PLACED ABOVE ALL PLASTIC PIPES.
10. WHERE WATER LINE CROSSES UNDER WASTEWATER LINES, THE WATER LINE SHALL BE ENCASED IN AN 18 FOOT MINIMUM LENGTH STEEL ENCASEMENT PIPE CENTERED ON THE WATER LINE AND SHALL BE AT LEAST TWO NOMINAL PIPE DIAMETERS LARGER THAN THE WATER LINE PER TAC PART 1, CHP 290, SUBCHAPTER D, RULE 290.44 AND THE CITY OF HUTTO DETAIL W-14.

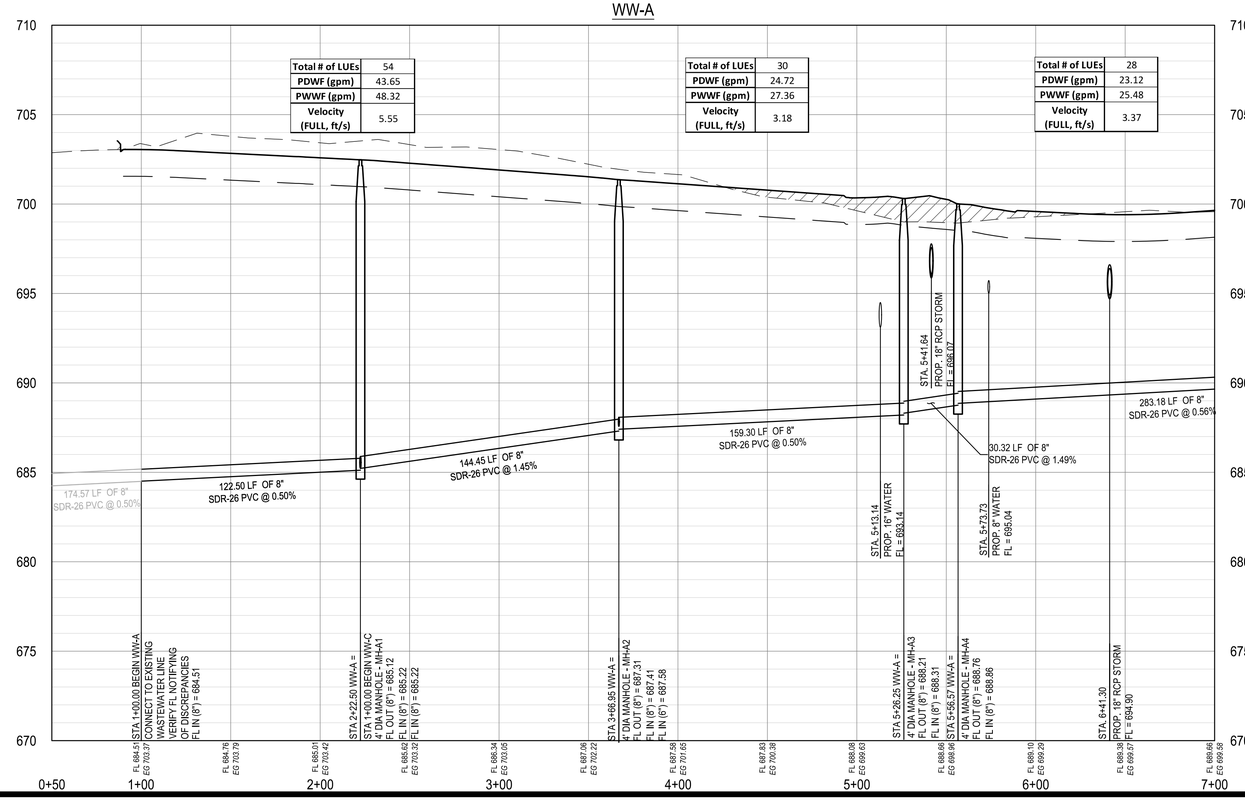

PROFILE LEGEND

- FINISHED GRADE
- PROPOSED SUBGRADE
- EXISTING GRADE
- PROPOSED WASTEWATER LINE
- PROPOSED WASTEWATER MANHOLE

REV	DESCRIPTION	DATE	APR
	Record Drawing		

DESIGNED BY: DAZ
REVIEWED BY: TMH
DRAWN BY: DAZ

BGE, INC.
1701 DIRECTORS BOULEVARD, SUITE 1000
AUSTIN, TX 78744
TBPE Registration No. F-1046
TEL: 512-879-0400 www.browngay.com

WILCO RANCH PHASE 3 SECTION 2
HUTTO, TEXAS

WW-A PLAN AND PROFILE (1+00 TO 7+00)

SUBMITTAL DATE: 12-10-2020

STATE OF TEXAS
TIMOTHY M. HOLLAND
94848
LICENSED PROFESSIONAL ENGINEER
8/9/2021

SHEET
24 OF 44

G:\TXC\Projects\Ashton_Woods\802240-Wilco_Ranch_Ph3_Sec2\LD\01_CADD\01_Shts\C-SP-SSWR-P&P-PH 3-SEC 2.dwg Layout: WW-A PLAN AND PROFILE (1+00 TO 7+00) Plotted: 8/3/2021 8:39:51 AM

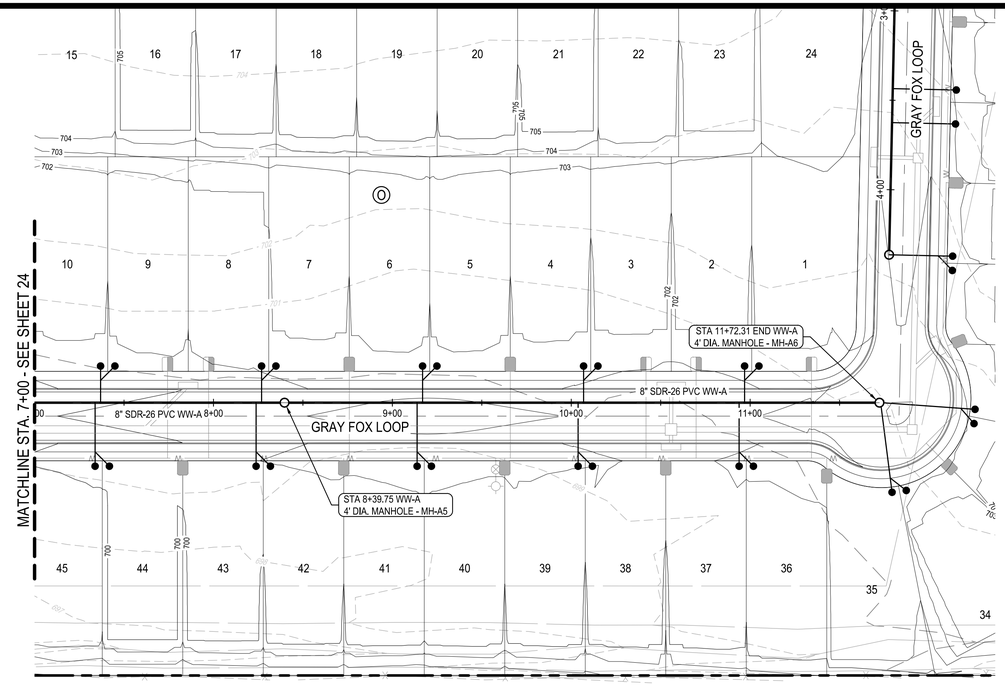

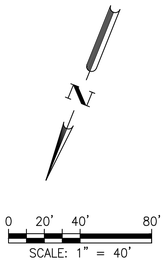

LEGEND

- PROPERTY BOUNDARY
- PROPOSED RIGHT OF WAY
- EXISTING MAJOR CONTOUR
- EXISTING MINOR CONTOUR
- PROPOSED MAJOR CONTOUR
- PROPOSED MINOR CONTOUR
- WASTEWATER LINE
- WASTEWATER MANHOLE
- DIRECTION OF FLOW
- DOUBLE WASTEWATER SERVICE
- SINGLE WASTEWATER SERVICE
- DOUBLE WATER SERVICE
- SINGLE WATER SERVICE

* ALL WASTEWATER SYMBOLS ARE NOT TO SCALE, AND ARE ONLY SHOWN FOR ILLUSTRATION PURPOSES. REFER TO DETAILS SHOWN IN THIS PLAN SET.

NOTE:

1. ALL MANHOLES SHALL BE COATED AND VACUUM TESTED.
2. ALL OFFSITE WASTEWATER MANHOLES SHALL HAVE MARKERS.
3. TOPS OF MANHOLES UNDER PAVEMENT SHALL BE ADJUSTED TO MATCH FINISH GRADES PRIOR TO ACCEPTANCE OF WORK.
4. CORE EXISTING MANHOLE, INSERT GASKET AND PROVIDE PRECO GROUT SEAL INSIDE AND OUR, OR APPROVED EQUAL.
5. ALL WASTEWATER LINES SHALL BE PVC SDR-26 CONFORMING TO ASTM D3034 WITH MINIMUM PIPE STIFFNESS OF 115 PSI AS DETERMINED BY ASTM D2412.
6. AT ALL WATERLINE CROSSINGS, WASTEWATER MAIN SHALL BE ASTM 2241, SDR-26CLASS 160 OR BETTER PVC FOR MINIMUM 20 FEET CENTERED ON THE WATERLINE.
7. CONTRACTOR SHALL MAINTAIN A MINIMUM SEPARATION DISTANCE IN ALL DIRECTIONS OF NINE FEET BETWEEN PROPOSED WATERLINE AND WASTEWATER COLLECTION FACILITIES INCLUDING MANHOLES. IF THIS DISTANCE CANNOT BE MAINTAINED, CONTRACTOR MUST IMMEDIATELY NOTIFY PROJECT ENGINEER FOR FURTHER DIRECTION.
8. ALL GRAVITY LINES ARE TO BE INSTALLED FROM DOWNSTREAM TO UPSTREAM.
9. TRACER TAPE SHALL BE PLACED ABOVE ALL PLASTIC PIPES.
10. WHERE WATER LINE CROSSES UNDER WASTEWATER LINES, THE WATER LINE SHALL BE ENCASED IN AN 18 FOOT MINIMUM LENGTH STEEL ENCASEMENT PIPE CENTERED ON THE WATER LINE AND SHALL BE AT LEAST TWO NOMINAL PIPE DIAMETERS LARGER THAN THE WATER LINE PER TAC PART 1, CHP 290, SUBCHAPTER D, RULE 290.44 AND THE CITY OF HUTTO DETAIL W-14.

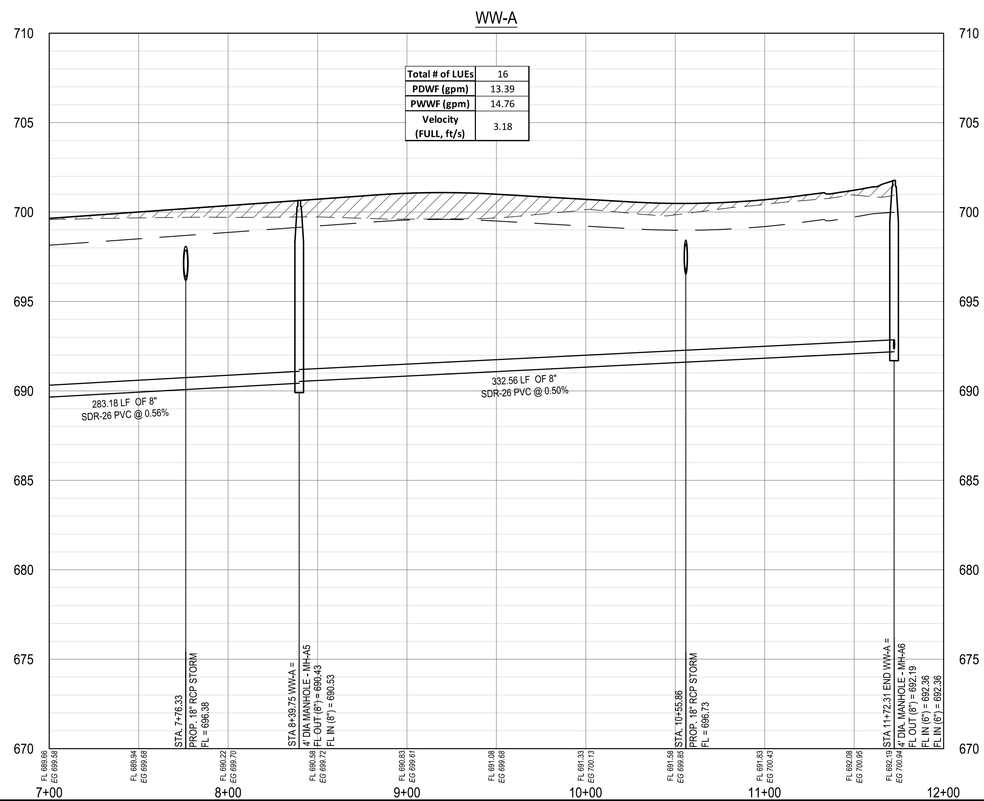

PROFILE LEGEND

- FINISHED GRADE
- PROPOSED SUBGRADE
- EXISTING GRADE
- PROPOSED WASTEWATER LINE
- PROPOSED WASTEWATER MANHOLE

REV	DESCRIPTION	DATE	APR
	Record Drawing		

DESIGNED BY: DAZ
REVIEWED BY: TMH
DRAWN BY: DAZ

BGE, INC.
1701 DIRECTORS BOULEVARD, SUITE 1000
AUSTIN, TX 78744
TBPE Registration No. F-1046
TEL: 512-879-0400 www.browngay.com

WILCO RANCH PHASE 3 SECTION 2
HUTTO, TEXAS

WW-A PLAN AND PROFILE (7+00 TO END)

SUBMITTAL DATE: 12-10-2020

STATE OF TEXAS
TIMOTHY M. HOLLAND
94848
LICENSED PROFESSIONAL ENGINEER
8/3/2021

SHEET
25 OF 44

G:\TXC\Projects\Ashton_Woods\80222-00-Wilco_Ranch_Ph3_Sec2\LD\01_CADD\01_Sht\C-SP-SSWR-P&P-PH 3-SEC 2.dwg Layout: WW-A PLAN AND PROFILE (7+00 TO END) Plotted: 8/3/2021 8:39:59 AM

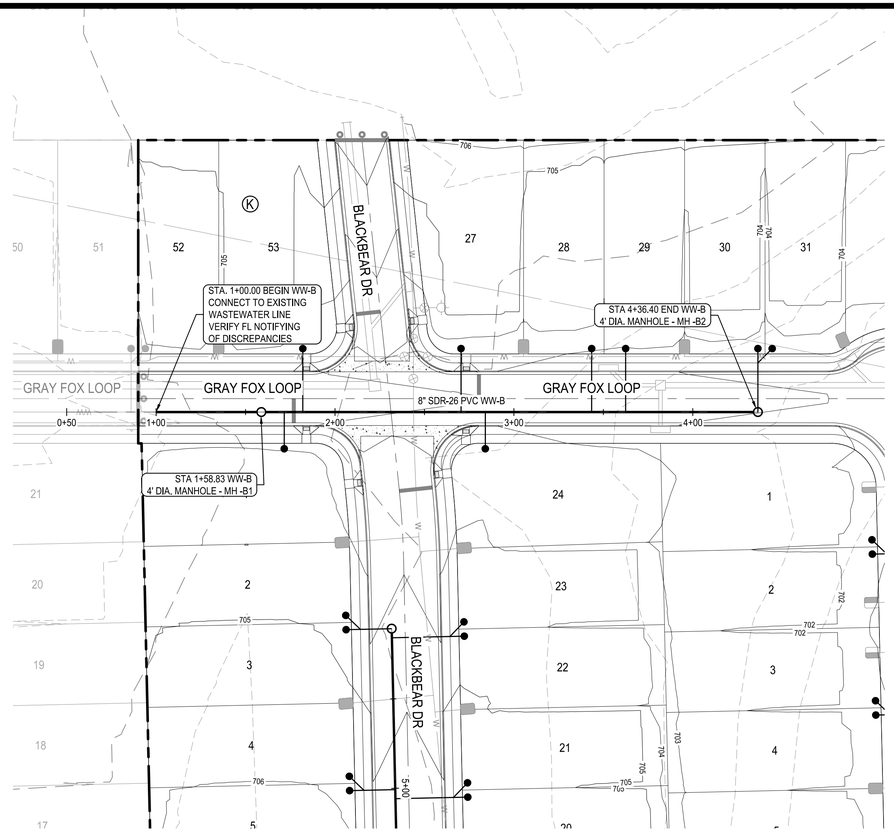

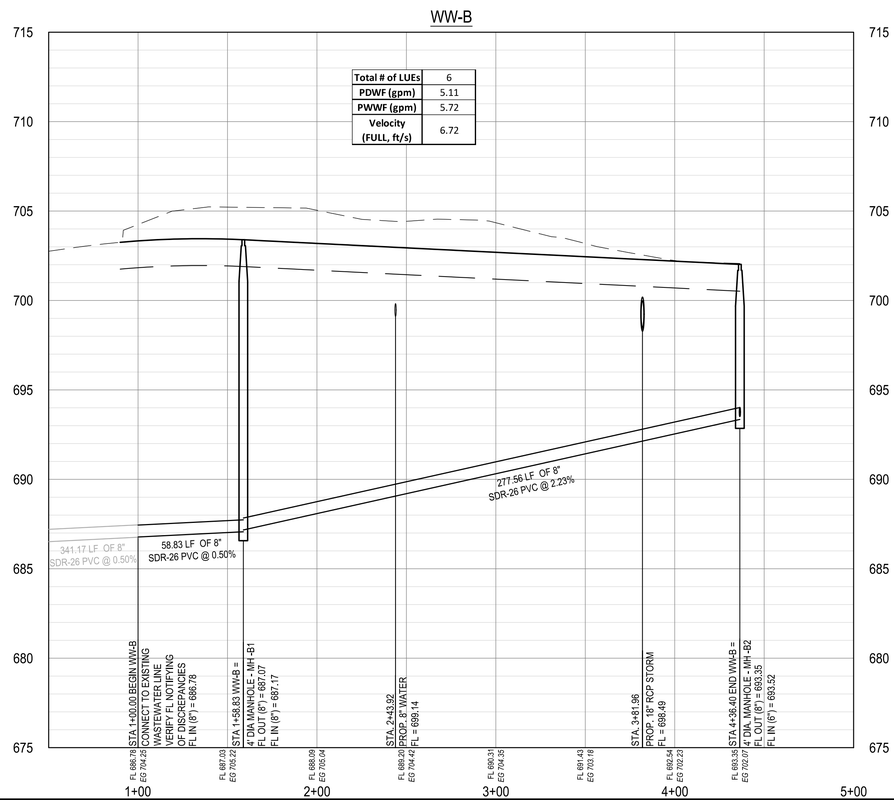

SCALE: 1" = 40'

LEGEND

- PROPERTY BOUNDARY
- PROPOSED RIGHT OF WAY
- EXISTING MAJOR CONTOUR
- EXISTING MINOR CONTOUR
- PROPOSED MAJOR CONTOUR
- PROPOSED MINOR CONTOUR
- WASTEWATER LINE
- WASTEWATER MANHOLE
- DIRECTION OF FLOW
- DOUBLE WASTEWATER SERVICE
- SINGLE WASTEWATER SERVICE
- DOUBLE WATER SERVICE
- SINGLE WATER SERVICE

* ALL WASTEWATER SYMBOLS ARE NOT TO SCALE, AND ARE ONLY SHOWN FOR ILLUSTRATION PURPOSES. REFER TO DETAILS SHOWN IN THIS PLAN SET.

NOTE:

1. ALL MANHOLES SHALL BE COATED AND VACUUM TESTED.
2. ALL OFFSITE WASTEWATER MANHOLES SHALL HAVE MARKERS.
3. TOPS OF MANHOLES UNDER PAVEMENT SHALL BE ADJUSTED TO MATCH FINISH GRADES PRIOR TO ACCEPTANCE OF WORK.
4. CORE EXISTING MANHOLE, INSERT GASKET AND PROVIDE PRECO GROUT SEAL INSIDE AND OUR, OR APPROVED EQUAL.
5. ALL WASTEWATER LINES SHALL BE PVC SDR-26 CONFORMING TO ASTM D3034 WITH MINIMUM PIPE STIFFNESS OF 115 PSI AS DETERMINED BY ASTM D2412.
6. AT ALL WATERLINE CROSSINGS, WASTEWATER MAIN SHALL BE ASTM 2241, SDR-26CLASS 160 OR BETTER PVC FOR MINIMUM 20 FEET CENTERED ON THE WATERLINE.
7. CONTRACTOR SHALL MAINTAIN A MINIMUM SEPARATION DISTANCE IN ALL DIRECTIONS OF NINE FEET BETWEEN PROPOSED WATERLINE AND WASTEWATER COLLECTION FACILITIES INCLUDING MANHOLES. IF THIS DISTANCE CANNOT BE MAINTAINED, CONTRACTOR MUST IMMEDIATELY NOTIFY PROJECT ENGINEER FOR FURTHER DIRECTION.
8. ALL GRAVITY LINES ARE TO BE INSTALLED FROM DOWNSTREAM TO UPSTREAM.
9. TRACER TAPE SHALL BE PLACED ABOVE ALL PLASTIC PIPES.
10. WHERE WATER LINE CROSSES UNDER WASTEWATER LINES, THE WATER LINE SHALL BE ENCASED IN AN 18 FOOT MINIMUM LENGTH STEEL ENCASEMENT PIPE CENTERED ON THE WATER LINE AND SHALL BE AT LEAST TWO NOMINAL PIPE DIAMETERS LARGER THAN THE WATER LINE PER TAC PART 1, CHP 290, SUBCHAPTER D, RULE 290.44 AND THE CITY OF HUTTO DETAIL W-14.

PROFILE LEGEND

- FINISHED GRADE
- PROPOSED SUBGRADE
- EXISTING GRADE
- PROPOSED WASTEWATER LINE
- PROPOSED WASTEWATER MANHOLE

REV	DESCRIPTION	DATE	APR
	Record Drawing		

DESIGNED BY: DAZ
REVIEWED BY: TMH
DRAWN BY: DAZ

BGE, INC.
1701 DIRECTORS BOULEVARD, SUITE 1000
AUSTIN, TX 78744
TBPE Registration No. F-1046
TEL: 512-879-0400 www.brownbyg.com

WILCO RANCH PHASE 3 SECTION 2
HUTTO, TEXAS

WW-B PLAN AND PROFILE(1+00 TO END)

SUBMITTAL DATE: 12-10-2020

STATE OF TEXAS
TIMOTHY M. HOLLAND
94848
LICENSED PROFESSIONAL ENGINEER
8/9/2021

SHEET
26 OF 44

G:\TXC\Projects\Ashton_Woods\8022-00-Wilco_Ranch_Ph3_Sec2\LD\01_CADD\01_Sht\s\C-SP-SSWR-P&P-PH 3-SEC 2.dwg Layout: WW-B PLAN AND PROFILE(1+00 TO END) Plotted: 8/3/2021 8:40:05 AM

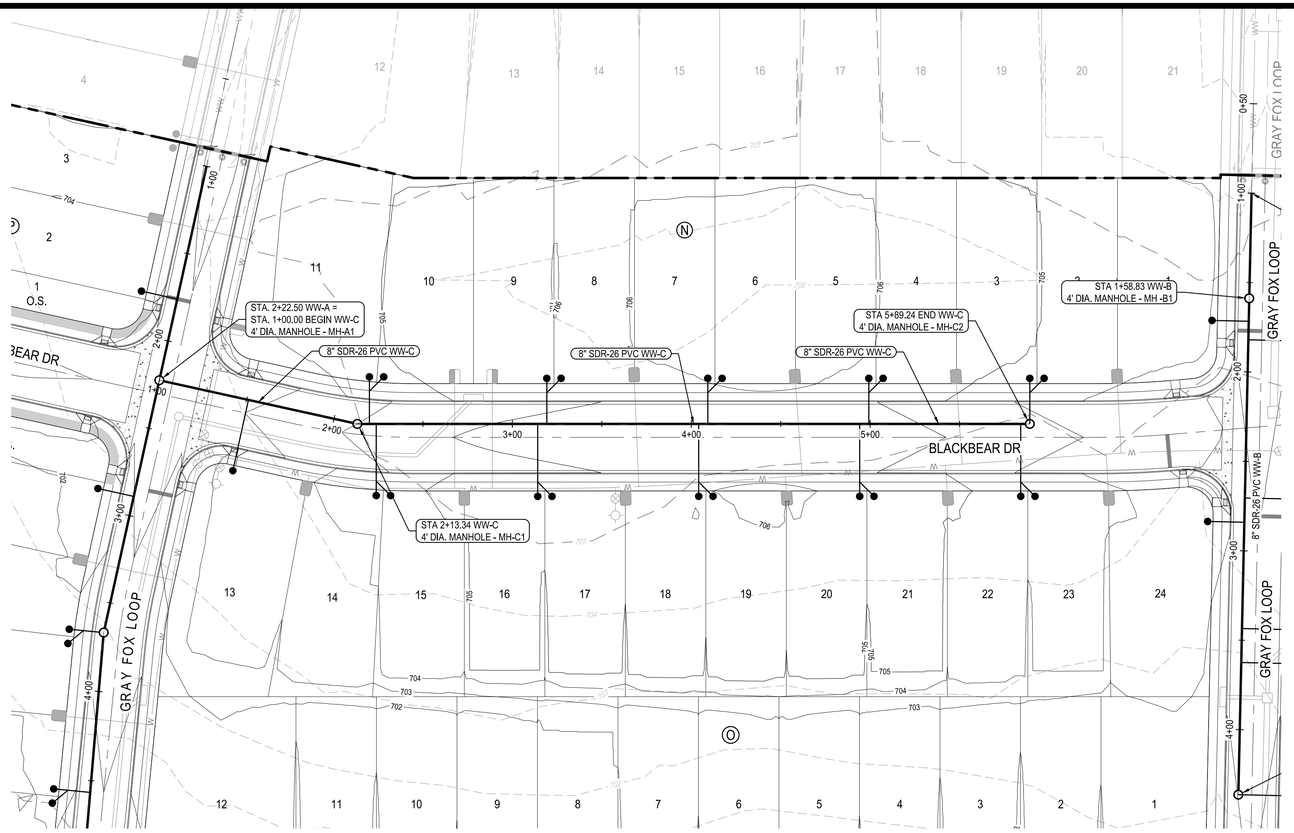

LEGEND

- PROPERTY BOUNDARY
- PROPOSED RIGHT OF WAY
- EXISTING MAJOR CONTOUR
- EXISTING MINOR CONTOUR
- PROPOSED MAJOR CONTOUR
- PROPOSED MINOR CONTOUR
- WASTEWATER LINE
- WASTEWATER MANHOLE
- DIRECTION OF FLOW
- DOUBLE WASTEWATER SERVICE
- SINGLE WASTEWATER SERVICE
- DOUBLE WATER SERVICE
- SINGLE WATER SERVICE

* ALL WASTEWATER SYMBOLS ARE NOT TO SCALE, AND ARE ONLY SHOWN FOR ILLUSTRATION PURPOSES. REFER TO DETAILS SHOWN IN THIS PLAN SET.

NOTE:

1. ALL MANHOLES SHALL BE COATED AND VACUUM TESTED.
2. ALL OFFSITE WASTEWATER MANHOLES SHALL HAVE MARKERS.
3. TOPS OF MANHOLES UNDER PAVEMENT SHALL BE ADJUSTED TO MATCH FINISH GRADES PRIOR TO ACCEPTANCE OF WORK.
4. CORE EXISTING MANHOLE, INSERT GASKET AND PROVIDE PRECO GROUT SEAL INSIDE AND OUR, OR APPROVED EQUAL.
5. ALL WASTEWATER LINES SHALL BE PVC SDR-26 CONFORMING TO ASTM D3034 WITH MINIMUM PIPE STIFFNESS OF 115 PSI AS DETERMINED BY ASTM D2412.
6. AT ALL WATERLINE CROSSINGS, WASTEWATER MAIN SHALL BE ASTM 2241, SDR-26CLASS 160 OR BETTER PVC FOR MINIMUM 20 FEET CENTERED ON THE WATERLINE.
7. CONTRACTOR SHALL MAINTAIN A MINIMUM SEPARATION DISTANCE IN ALL DIRECTIONS OF NINE FEET BETWEEN PROPOSED WATERLINE AND WASTEWATER COLLECTION FACILITIES INCLUDING MANHOLES. IF THIS DISTANCE CANNOT BE MAINTAINED, CONTRACTOR MUST IMMEDIATELY NOTIFY PROJECT ENGINEER FOR FURTHER DIRECTION.
8. ALL GRAVITY LINES ARE TO BE INSTALLED FROM DOWNSTREAM TO UPSTREAM.
9. TRACER TAPE SHALL BE PLACED ABOVE ALL PLASTIC PIPES.
10. WHERE WATER LINE CROSSES UNDER WASTEWATER LINES, THE WATER LINE SHALL BE ENCASED IN AN 18 FOOT MINIMUM LENGTH STEEL ENCASEMENT PIPE CENTERED ON THE WATER LINE AND SHALL BE AT LEAST TWO NOMINAL PIPE DIAMETERS LARGER THAN THE WATER LINE PER TAC PART 1, CHP 290, SUBCHAPTER D, RULE 290.44 AND THE CITY OF HUTTO DETAIL W-14.

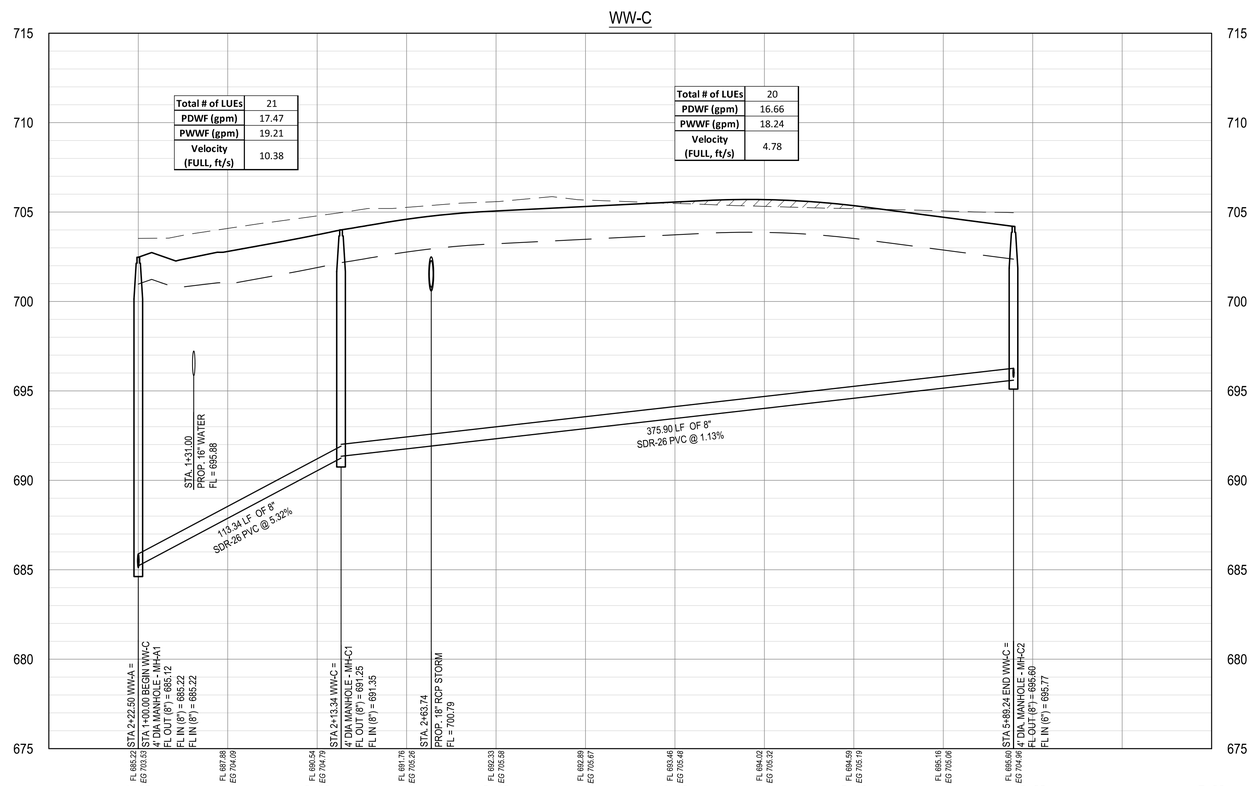

PROFILE LEGEND

- FINISHED GRADE
- PROPOSED SUBGRADE
- EXISTING GRADE
- PROPOSED WASTEWATER LINE
- PROPOSED WASTEWATER MANHOLE

REV	DESCRIPTION	DATE	APR
	Record Drawing		

DESIGNED BY: DAZ
REVIEWED BY: TMH
DRAWN BY: DAZ

BGE, INC.
1701 DIRECTORS BOULEVARD, SUITE 1000
AUSTIN, TX 78744
TBPE Registration No. F-1046
TEL: 512-879-0400 www.browngay.com

WILCO RANCH PHASE 3 SECTION 2
HUTTO, TEXAS

WW-C PLAN AND PROFILE(1+00 TO END)

SUBMITTAL DATE: 12-10-2020

STATE OF TEXAS
TIMOTHY M. MIDLAM
94848
LICENSED PROFESSIONAL ENGINEER
8/9/2021

SHEET
27 OF 44

G:\TXC\Projects\Ashton_Woods\8022-00-Wilco_Ranch_Ph3_Sec2\LD\01_CADD\01_Sht\s\C-SP-SSWR-P&P-PH 3-SEC 2.dwg Layout: WW-C PLAN AND PROFILE(1+00 TO END) Plotted: 8/3/2021 8:40:13 AM

Curve Table: Alignments					
CURVE	DELTA ANGLE	RADIUS	ARC LENGTH	CHORD DIRECTION	CHORD DISTANCE
C1	6°05'13"	1150.00'	122.17'	N66° 19' 44.51"E	122.12'
C2	5°22'27"	1150.00'	107.87'	N66° 41' 07.47"E	107.83'
C3	4°07'06"	1150.00'	82.66'	N66° 03' 27.10"E	82.64'
C4	8°53'37"	1150.00'	178.50'	S12° 53' 35.92"E	178.32'

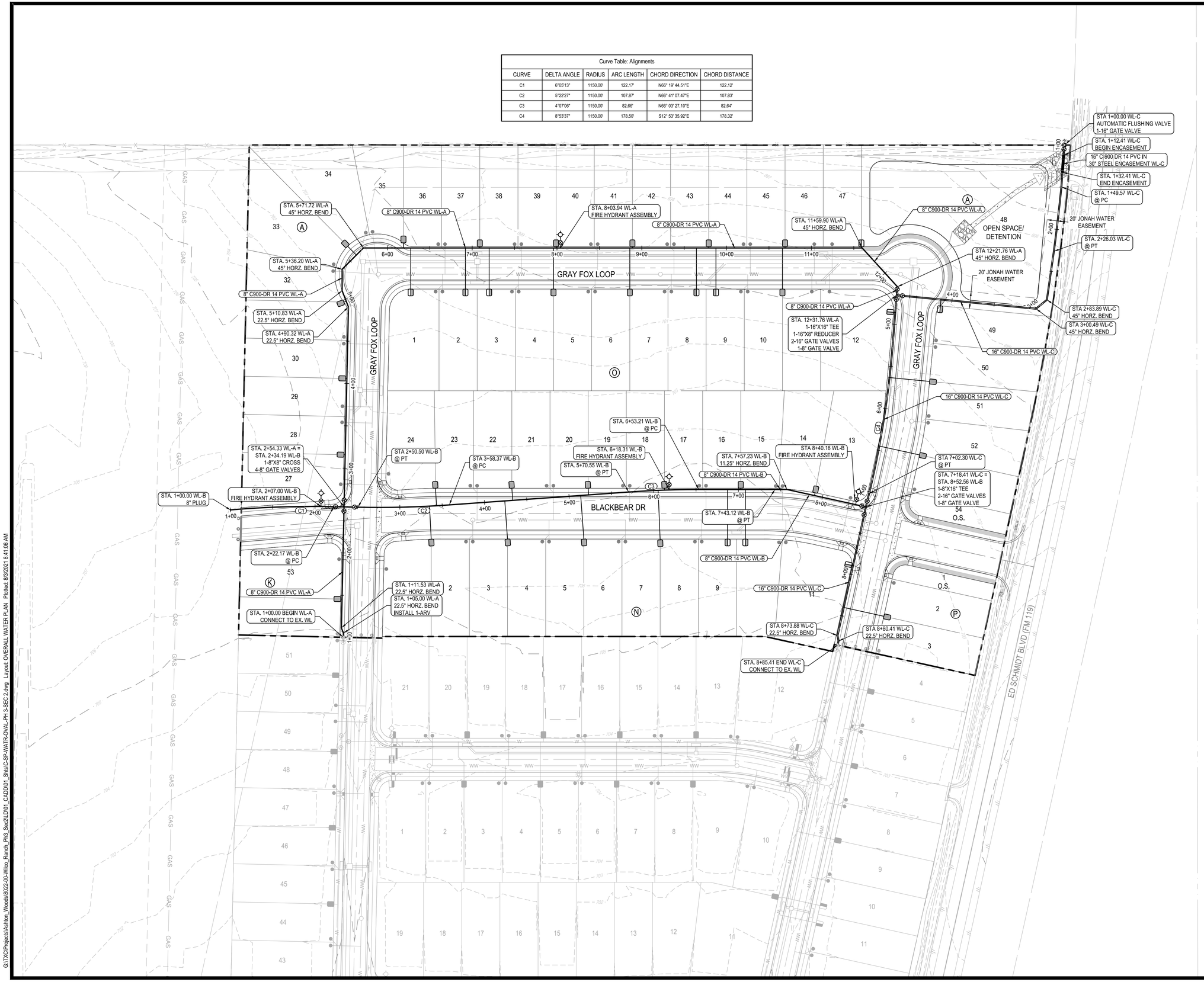

N

0 25' 50' 100'

SCALE: 1" = 50'

LEGEND

- PROPERTY BOUNDARY
- PROPOSED RIGHT OF WAY
- EXISTING MAJOR CONTOUR
- EXISTING MINOR CONTOUR
- FIRE HYDRANT ASSEMBLY
- GATE VALVE
- CAP
- 2" IRRIGATION SERVICE
- DOUBLE WATER SERVICE
- SINGLE WATER SERVICE
- DOUBLE WASTEWATER SERVICE
- SINGLE WASTEWATER SERVICE
- AUTOMATIC FLUSHING VALVE

* ALL WATER SYMBOLS ARE NOT TO SCALE AND ARE ONLY SHOWN FOR ILLUSTRATION PURPOSES.
* CONTRACTOR TO PLACE GATE VALVES, AIR RELEASE VALVES AND FIRE HYDRANTS OUTSIDE OF CURBS AND VALLEY GUTTERS.

REV	DESCRIPTION	DATE	APR
	Record Drawing		

DESIGNED BY: DAZ
REVIEWED BY: TMH
DRAWN BY: DAZ

BGE
BGE, INC.
1701 DIRECTORS BOULEVARD, SUITE 1000
AUSTIN, TX 78744
TBPE Registration No. F-1046
TEL: 512-879-0400 www.browngay.com

WILCO RANCH PHASE 3 SECTION 2
HUTTO, TEXAS

OVERALL WATER PLAN

SUBMITTAL DATE: 12-10-2020

STATE OF TEXAS
TIMOTHY M. HOLLAND
94848
LICENSED
PROFESSIONAL ENGINEER
3/9/2021

SHEET
28 OF 44

G:\TXCI\Projects\Ashton_Woods\8022-00-Wilco_Ranch_Ph3_Sec2\LD\01_CADD\01_Shts\C-SP-WATR-OVALPH3-SEC 2.dwg Layout: OVERALL WATER PLAN Plotted: 8/3/2021 8:41:06 AM

Curve Table: Alignments					
CURVE	DELTA ANGLE	RADIUS	ARC LENGTH	CHORD DIRECTION	CHORD DISTANCE
C1	1°42'38"	2561.23'	76.46'	S15° 13' 58.51"E	76.46'
C2	8°53'37"	1150.00'	178.50'	S12° 53' 35.92"E	178.32'

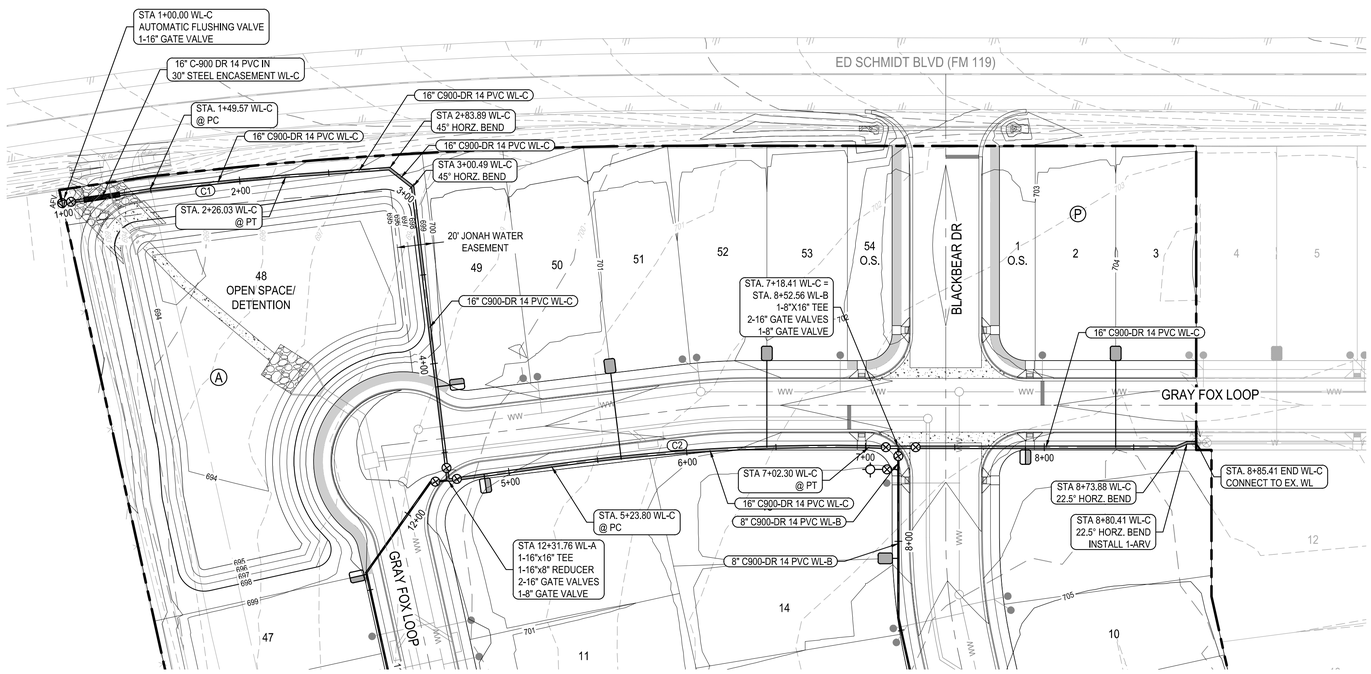

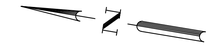

0 20' 40' 80'
SCALE: 1" = 40'

LEGEND

- PROPERTY BOUNDARY
- EXISTING MAJOR CONTOUR
- EXISTING MINOR CONTOUR
- FIRE HYDRANT ASSEMBLY
- GATE VALVE
- CAP
- WATER METER
- DOUBLE WATER SERVICE
- SINGLE WATER SERVICE
- DOUBLE WASTEWATER SERVICE
- SINGLE WASTEWATER SERVICE

* ALL WATER SYMBOLS ARE NOT TO SCALE AND ARE ONLY SHOWN FOR ILLUSTRATION PURPOSES.

PROFILE LEGEND

- FINISHED GRADE
- SUBGRADE
- EXISTING GRADE
- PROPOSED WATER LINE
- FIRE HYDRANT
- GATE VALVE
- WATER METER
- AIR RELEASE VALVE
- WATER CAP

* ALL WATER SYMBOLS ARE NOT TO SCALE AND ARE ONLY SHOWN FOR ILLUSTRATION PURPOSES.

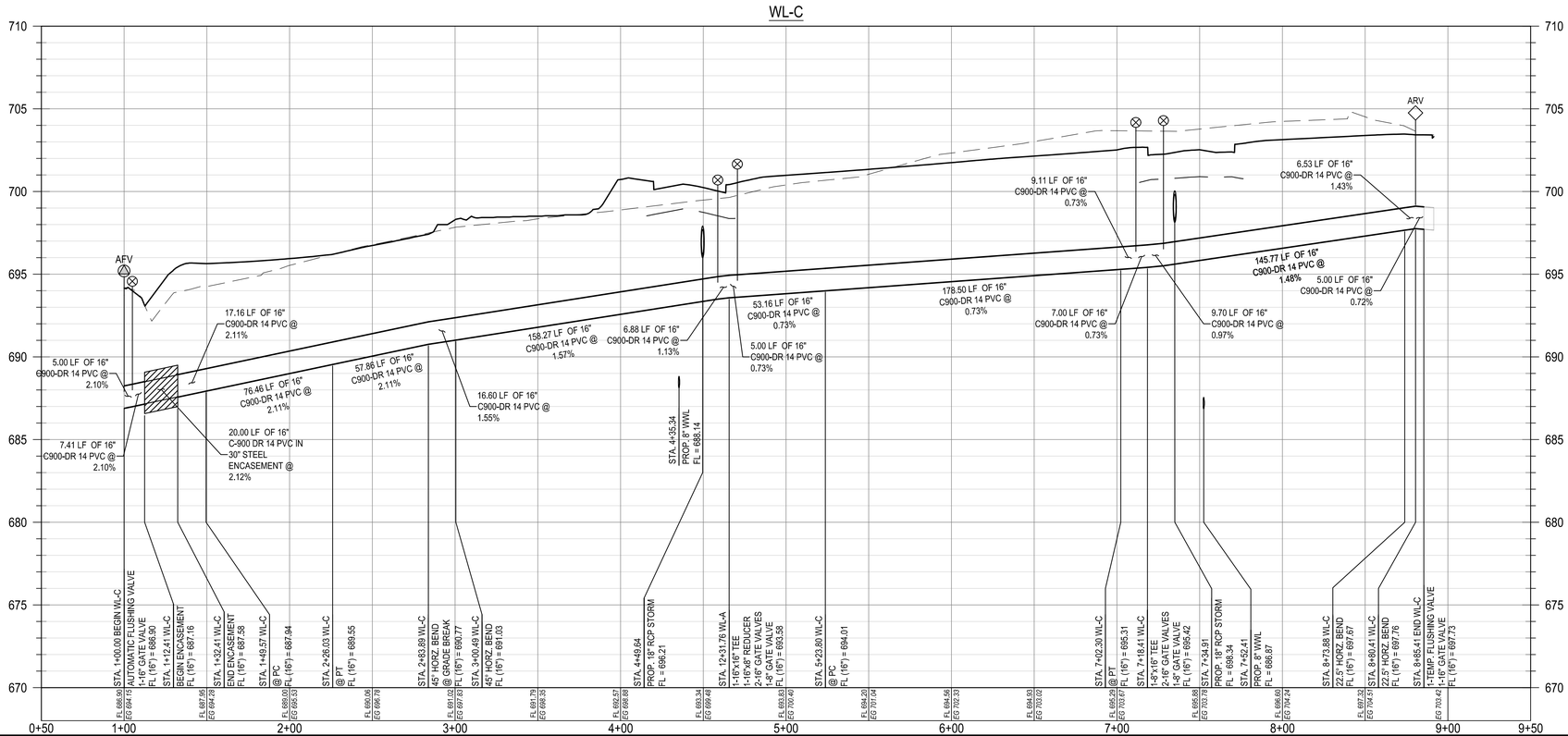

						APR
						DATE
						DESCRIPTION
						REV

Record Drawing

DESIGNED BY: DAZ
REVIEWED BY: TMH
DRAWN BY: DAZ

BGE

BGE, INC.
1701 DIRECTORS BOULEVARD, SUITE 1000
AUSTIN, TX 78744
TBPE Registration No. F-1046
TEL: 512-879-0400 www.browngay.com

WILCO RANCH PHASE 3 SECTION 2
HUTTO, TEXAS
16" WL-C PLAN AND PROFILE (1+00 TO END)

SUBMITTAL DATE: 12-10-2020

STATE OF TEXAS
TIMOTHY M. HIGLAND
94868
LICENSED PROFESSIONAL ENGINEER
8/9/2021

SHEET
29 OF 44

G:\TXCI\Projects\Ashton_Woods\8022-00-Wilco_Ranch_Ph3_Sec2\LD\01_CADD\01_Shts\C-SP-WATR-PAP-PH 3-SEC 2.dwg Layout: 16" WL-C PLAN AND PROFILE (1+00 TO END) Plotted: 8/3/2021 10:39:45 AM

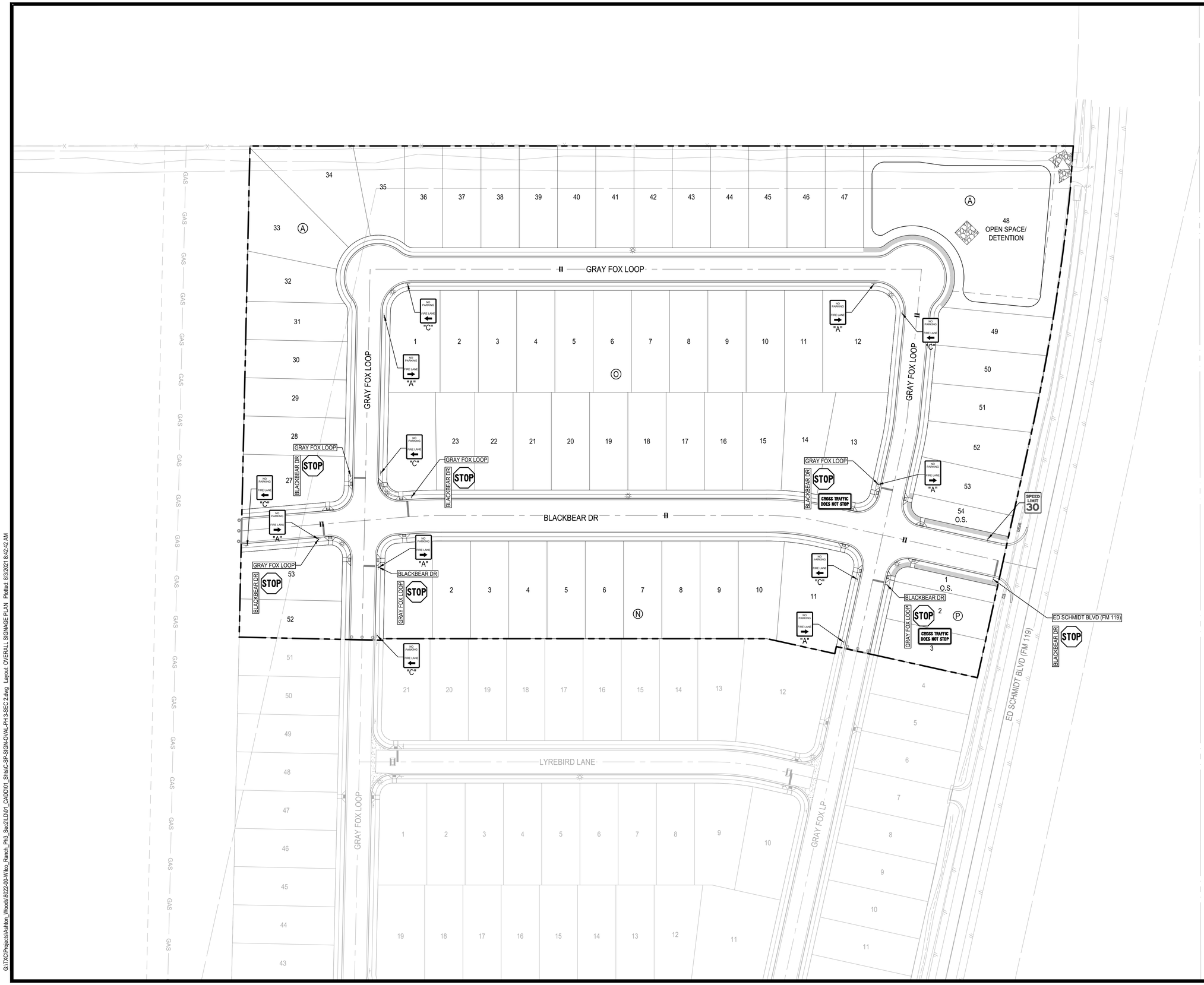

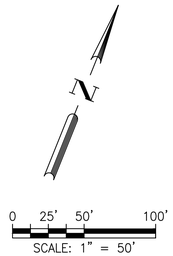

LEGEND

	PROPERTY BOUNDARY
STREET NAME / STREET NAME STOP R1-1 30"x30"	PROPOSED STOP SIGN W/ STREET NAME SIGNS
SPEED LIMIT 30	PROPOSED SPEED LIMIT SIGN
	PROPOSED STREET END BARRICADE
	PROPOSED SIGN
	PROPOSED STOP BAR
	PROPOSED BLUE FIRE HYDRANT DELINEATOR
	STREET LIGHT (BY OTHERS)

NOTES:

1. STREET NAMES SHALL BE DISPLAYED ON STANDARD D3-1 GUIDE SIGNS ERECTED AT EACH STREET INTERSECTION AND HAVE WHITE LETTERS ON A GREEN BACKGROUND IN ACCORDANCE WITH TRAVIS COUNTY STANDARDS.
2. ALL SIGNS AND PAVEMENT MARKINGS SHALL BE IN ACCORDANCE WITH THE LATEST EDITION OF THE TEXAS MANUAL OF UNIFORM TRAFFIC DEVICES (TxMUTCD).
3. PER TxMUTCD REQUIREMENTS, THERE MUST BE A 2' MINIMUM OFFSET BETWEEN THE FACE OF CURB AND THE OUTSIDE EDGE OF SIGNS.
4. BLUE FIRE HYDRANT DELINEATORS TO BE PLACED IN OUTSIDE TRAVEL LANE, 3' FROM LIP OF GUTTER.
5. ALL CHANGES TO THE TRAFFIC CONTROL PLAN MUSH BE APPROVED AND DOCUMENTED BY THE SEALING ENGINEER. THE CONTRACTOR IS RESPONSIBLE FOR PROVIDING ANY PROPOSED CHANGES TO THE TRAFFIC CONTROL PLAN TO THE ENGINEER FOR APPROVAL.
6. THE LETTERING FOR NAMES OF STREETS ON STREET NAME SIGNS SHALL BE COMPOSED OF A COMBINATION OF LOWER-CASE LETTERS WITH INITIAL UPPER-CASE LETTERS.
7. STOP SIGNS TO BE INSTALLED PER CITY OF HUTTO DETAIL SD-03
8. TYPE III BARRICADES TO THE INSTALLED PER CITY OF GEORGETOWN DETAIL SD22.
9. ALL STOP SIGNS TO BE ACCOMPANIED WITH ADJACENT 24 INCH WHITE STOP BAR.
10. ALL SIGNS AND STRIPING TO BE INSTALLED PER TxMUTCD.
11. ALL STREETLIGHTS ALONG PROPOSED PUBLIC STREETS MUST CONFORM TO LIGHTING REGULATIONS IN HUTTO UDC SECTION 10.409 AND 10.605.9.

SIGN TYPE "A" SIGN TYPE "C" SIGN TYPE "D"

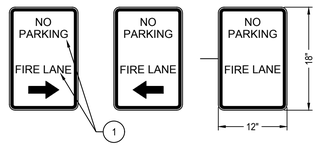

(1) RED LETTERING ON A WHITE REFLECTIVE BACKGROUND

* NO PARKING SIGNS TO MEET 2018 IFC D103.3

REV	DESCRIPTION	DATE	APR
	Record Drawing		

DESIGNED BY: DAZ
REVIEWED BY: TMH
DRAWN BY: DAZ

BGE, INC.
1701 DIRECTORS BOULEVARD, SUITE 1000
AUSTIN, TX 78744
TBPE Registration No. F-1046
TEL: 512-879-0400 www.browngay.com

WILCO RANCH PHASE 3 SECTION 2
HUTTO, TEXAS

OVERALL SIGNAGE PLAN

SUBMITTAL DATE: 12-10-2020

STATE OF TEXAS
TIMOTHY M. HOLLAND
94848
LICENSED
PROFESSIONAL ENGINEER
3/3/2021

SHEET
30 OF 44

G:\TXCI\Projects\Ashton_Woods\8022-00-Wilco_Ranch_Ph3_Sec2\LD\01_CADD\01_Sts\C-SP-SIGN-OVAL-PH 3-SEC 2.dwg Layout: OVERALL SIGNAGE PLAN Plotted: 8/3/2021 8:42 AM

GUIDELINES FOR DESIGN AND INSTALLATION OF TEMPORARY EROSION AND SEDIMENTATION CONTROLS

TYPE OF STRUCTURE	REACH LENGTH	MAXIMUM DRAINAGE AREA	SLOPE
SILT FENCE	N/A	2 ACRES	0 – 10%
	200 FEET	2 ACRES	10 – 20%
	100 FEET	1 ACRE	20 – 30%
	50 FEET	1/2 ACRE	> 30%
TRIANGLE FILTER DIKE	100 FEET	1/2 ACRE	< 30% SLOPE
	50 FEET	1/4 ACRE	> 30% SLOPE
ROCK BERM *, **	500 FEET	< 5 ACRES	0 – 10%

* FOR ROCK BERM DESIGN WHERE PARAMETERS ARE OTHER THAN STATED, DRAINAGE AREA CALCULATIONS AND ROCK BERM DESIGN MUST BE SUBMITTED FOR REVIEW.

** HIGH SERVICE ROCK BERMS MAY BE REQUIRED IN AREAS OF ENVIRONMENTAL SIGNIFICANCE AS DETERMINED BY THE CITY OF GEORGETOWN.

The Architect/Engineer assumes responsibility for appropriate use of this standard.

REVISION NOTE: ADOPTED 6/21/2006

CITY OF GEORGETOWN
CONSTRUCTION STANDARDS AND DETAILS
TEMPORARY EROSION AND SEDIMENTATION CONTROL GUIDELINES

DRAWING NAME: EC01 | SCALE: NTS | DATE: 1/2003 | DRAWN BY: MRS | APPROVED BY: TRB

NOTE: THIS SECTION IS INTENDED TO ASSIST THOSE PERSONS PREPARING WATER POLLUTION ABATEMENT PLANS (WPAP) OR STORM WATER POLLUTION PREVENTION PLANS (SW3P) THAT COMPLY WITH FEDERAL, STATE AND/OR LOCAL STORM WATER REGULATIONS.

1. THE CONTRACTOR TO INSTALL AND MAINTAIN EROSION/SEDIMENTATION CONTROLS AND TREE/NATURAL AREA PROTECTIVE FENCING PRIOR TO ANY SITE PREPARATION WORK (CLEARING, GRUBBING, GRADING, OR EXCAVATION). CONTRACTOR TO REMOVE EROSION/SEDIMENTATION CONTROLS AT THE COMPLETION OF PROJECT AND GRASS RESTORATION.
2. ALL PROJECTS WITHIN THE RECHARGE ZONE OF THE EDWARD'S AQUIFER SHALL SUBMIT A BEST MANAGEMENT PRACTICES AND WATER POLLUTION AND ABATEMENT PLAN TO THE TNRCC FOR APPROVAL PRIOR TO ANY CONSTRUCTION.
3. THE PLACEMENT OF EROSION/SEDIMENTATION CONTROLS TO BE IN ACCORDANCE WITH THE APPROVED EROSION AND SEDIMENTATION CONTROL PLAN AND WATER POLLUTION ABATEMENT PLAN. DEVIATIONS FROM THE APPROVED PLAN MUST BE SUBMITTED TO AND APPROVED BY THE OWNER'S REPRESENTATIVE.
4. ALL PLANTING SHALL BE DONE BETWEEN MAY 1 AND SEPTEMBER 15 EXCEPT AS SPECIFICALLY AUTHORIZED IN WRITING. IF PLANTING IS AUTHORIZED TO BE DONE OUTSIDE THE DATES SPECIFIED, THE SEED SHALL BE PLANTED WITH THE ADDITION OF WINTER FESCUE (KENTUCKY 31) AT A RATE OF 100lb/ACRE. GRASS SHALL BE COMMON BERMUDA GRASS, HULLED, MINIMUM 82% PURE LIVE SEED. ALL GRASS SEED SHALL BE FREE FROM NOXIOUS WEED, GRADE "A" RECENT CROP, RECLEANED AND TREATED WITH APPROPRIATE FUNGICIDE AT TIME OF MIXING. SEED SHALL BE FURNISHED IN SEALED, STANDARD CONTAINERS WITH DEALER'S GUARANTEED ANALYSIS.
5. ALL DISTURBED AREAS TO BE RESTORED AS NOTED IN THE WATER POLLUTION ABATEMENT PLAN.
6. THE PLANTED AREA TO BE IRRIGATED OR SPRINKLED IN A MANNER THAT WILL NOT ERODE THE TOPSOIL, BUT WILL SUFFICIENTLY SOAK THE SOIL TO A DEPTH OF FOUR (4) INCHES. THE IRRIGATION TO OCCUR AT 10–DAY INTERVALS DURING THE FIRST TWO MONTHS TO INSURE GERMINATION AND ESTABLISHMENT OF THE GRASS . RAINFALL OCCURRENCES OF 1/2 INCH OR GREATER TO POSTPONE THE WATERING SCHEDULE ONE WEEK.
7. RESTORATION TO BE ACCEPTABLE WHEN THE GRASS HAS GROWN AT LEAST 1–1/2 INCHES HIGH WITH 95***% COVERAGE***, PROVIDED NO BARE SPOTS LARGER THAN 25 SQUARE FEET EXIST.
8. A MINIMUM OF FOUR (4) INCHES OF TOPSOIL TO BE PLACED IN ALL AREAS DISTURBED BY CONSTRUCTION.
9. THE CONTRACTOR TO HYDROMULCH OR SOD (AS SHOWN ON PLANS) ALL EXPOSED CUTS AND FILLS UPON COMPLETION OF CONSTRUCTION.
10. EROSION AND SEDIMENTATION CONTROLS TO BE INSTALLED OR MAINTAINED IN A MANNER WHICH DOES NOT RESULT IN SOIL BUILDUP WITHIN TREE DRIPLINE.
11. TO AVOID SOIL COMPACTION, CONTRACTOR SHALL NOT ALLOW VEHICULAR TRAFFIC, PARKING, OR STORAGE OF EQUIPMENT OR MATERIALS IN THE TREE DRIPLINE AREAS.
12. WHERE A FENCE IS CLOSER THAN FOUR (4) FEET TO A TREE TRUNK, PROTECT THE TRUNK WITH STRAPPED–ON PLANKING TO A HEIGHT OF EIGHT (8) FEET (OR TO THE LIMITS OF LOWER BRANCHING) IN ADDITION TO THE FENCING.
13. TREES TO BE REMOVED IN A MANNER WHICH DOES NOT IMPACT TREES TO BE PRESERVED.
14. ANY ROOT EXPOSED BY CONSTRUCTION ACTIVITY TO BE PRUNED FLUSH WITH THE SOIL. BACKFILL ROOT AREAS WITH GOOD QUALITY TOPSOIL AS SOON AS POSSIBLE. IF EXPOSED ROOT AREAS ARE NOT BACKFILLED WITHIN TWO DAYS, COVER THEM WITH ORGANIC MATERIAL IN A MANNER WHICH REDUCES SOIL TEMPERATURE AND MINIMIZES WATER LOSS DUE TO EVAPORATION.
15. CONTRACTOR TO PRUNE VEGETATION TO PROVIDE CLEARANCE FOR STRUCTURES, VEHICULAR TRAFFIC, AND EQUIPMENT BEFORE DAMAGE OCCURS (RIPPING OF BRANCHES, ETC.). ALL FINISHED PRUNING TO BE DONE ACCORDING TO RECOGNIZED, APPROVED STANDARDS OF THE INDUSTRY (REFERENCE THE "NATIONAL ARBORIST ASSOCIATION PRUNING STANDARDS FOR SHADE TREES").
16. THE CONTRACTOR IS TO INSPECT THE CONTROLS AT WEEKLY INTERVALS AND AFTER EVERY RAINFALL EXCEEDING 1/4 INCH TO VERIFY THAT THEY HAVE NOT BEEN SIGNIFICANTLY DISTURBED. ANY ACCUMULATED SEDIMENT AFTER A SIGNIFICANT RAINFALL TO BE REMOVED AND PLACED IN THE OWNER DESIGNATED SPOIL DISPOSAL SITE. THE CONTRACTOR TO CONDUCT PERIODIC INSPECTIONS OF ALL EROSION/SEDIMENTATION CONTROLS AND TO MAKE ANY REPAIRS OR MODIFICATIONS NECESSARY TO ASSURE CONTINUED EFFECTIVE OPERATION OF EACH DEVICE.
17. WHERE THERE IS TO BE AN APPROVED GRADE CHANGE, IMPERMEABLE PAVING SURFACE, TREE WELL, OR OTHER SUCH SITE DEVELOPMENT IMMEDIATELY ADJACENT TO A PROTECTED TREE, ERECT THE FENCE APPROXIMATELY TWO TO FOUR FEET (2'–4') BEHIND THE AREA IN QUESTION.
18. NO ABOVE AND/OR BELOW GROUND TEMPORARY FUEL STORAGE FACILITIES TO BE STORED ON THE PROJECT SITE.
19. IF EROSION AND SEDIMENTATION CONTROL SYSTEMS ARE EXISTING FROM PRIOR CONTRACTS, OWNER'S REPRESENTATIVE AND THE CONTRACTOR TO EXAMINE THE EXISTING EROSION AND SEDIMENTATION CONTROL SYSTEMS FOR DAMAGE PRIOR TO CONSTRUCTION. ANY DAMAGE TO PREEXISTING EROSION AND SEDIMENTATION CONTROLS NOTED TO BE REPAIRED AT OWNER'S EXPENSE.
20. INTENTIONAL RELEASE OF VEHICLE OR EQUIPMENT FLUIDS ONTO THE GROUND IS NOT ALLOWED. CONTAMINATED SOIL RESULTING FROM ACCIDENTAL SPILL TO BE REMOVED AND DISPOSED OF PROPERLY.

The Architect/Engineer assumes responsibility for appropriate use of this standard.

REVISION NOTE: ADOPTED 6/21/2006

CITY OF GEORGETOWN
CONSTRUCTION STANDARDS AND DETAILS
EROSION AND SEDIMENTATION AND TREE PROTECTION NOTES

DRAWING NAME: EC01A | SCALE: NTS | DATE: 1/2003 | DRAWN BY: MRS | APPROVED BY: TRB

The Architect/Engineer assumes responsibility for appropriate use of this standard.

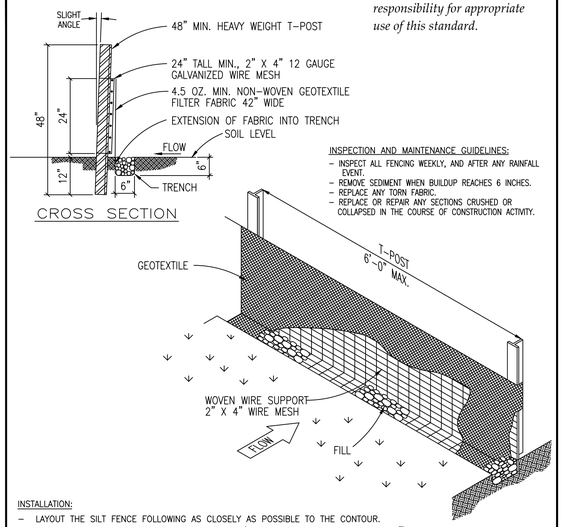

INSPECTION AND MAINTENANCE GUIDELINES:
- INSPECT ALL FENCING WEEKLY, AND AFTER ANY RAINFALL EVENT.
- REMOVE SEDIMENT WHEN BUILDUP REACHES 6 INCHES.
- REPLACE ANY TORN FABRIC.
- REPLACE OR REPAIR ANY SECTIONS CRUSHED OR COLLAPSED IN THE COURSE OF CONSTRUCTION ACTIVITY.

INSTALLATION:
- LAYOUT THE SILT FENCE FOLLOWING AS CLOSELY AS POSSIBLE TO THE CONTOUR.
- CLEAR THE GROUND OF DEBRIS, ROCKS, PLANTS (INCLUDING GRASSES TALLER THAN 2") TO PROVIDE A SMOOTH FLOW APPROACH SURFACE. EXCAVATE 6" DEEP X 6" WIDE TRENCH ON UPSTREAM SIDE OF FACE PER PLANS.
- DRIVE THE HEAVY DUTY T–POST AT LEAST 12 INCHES INTO THE GROUND AND AT A SLIGHT ANGLE TOWARDS THE FLOW.
- ATTACH THE 2" X 4" 12 GAUGE WELDED WIRE MESH TO THE T–POST WITH 11 1/2 GAUGE GALVANIZED T–POST CLIPS. THE TOP OF THE WIRE TO BE 24" ABOVE GROUND LEVEL. THE WELDED WIRE MESH TO BE OVERLAPPED 6" AND TIED AT LEAST 6 TIMES WITH HOG RINGS.
- THE SILT FENCE TO BE INSTALLED WITH A SKIRT A MINIMUM OF 6" WIDE PLACED ON THE UPHILL SIDE OF THE FENCE INSIDE EXCAVATED TRENCH. THE FABRIC TO OVERLAP THE TOP OF THE WIRE BY 1".
- ANCHOR THE SILT FENCE BY BACKFILLING WITH EXCAVATED DIRT AND ROCKS (NOT LARGER THAN 2").
- GEOTEXTILE SPLICES SHOULD BE A MINIMUM OF 18" WIDE ATTACHED IN AT LEAST 6 PLACES. SPLICES IN CONCENTRATED FLOW AREAS WILL NOT BE ACCEPTED.
- SILT FENCE SHALL BE REMOVED WHEN THE SITE IS COMPLETELY STABILIZED SO AS NOT TO BLOCK OR IMPEDE STORM FLOW OR DRAINAGE.

REVISION NOTE: ADOPTED 6/21/2006

CITY OF GEORGETOWN
CONSTRUCTION STANDARDS AND DETAILS
SILT FENCE DETAIL

DRAWING NAME: EC02 | SCALE: NTS | DATE: 1/2003 | DRAWN BY: MRS | APPROVED BY: TRB

The Architect/Engineer assumes responsibility for appropriate use of this standard.

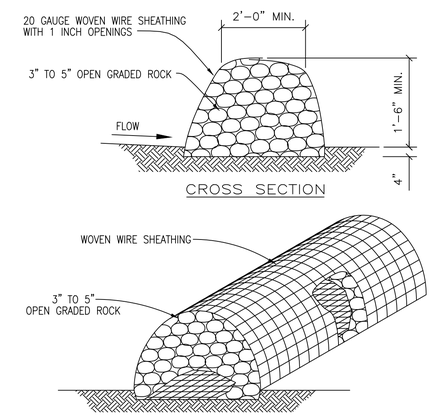

INSTALLATION:
- LAYOUT THE ROCK BERM FOLLOWING AS CLOSELY AS POSSIBLE TO THE CONTOUR.
- CLEAR THE GROUND OF DEBRIS, ROCKS OR PLANTS THAT WILL INTERFERE WITH INSTALLATION.
- PLACE WOVEN WIRE FABRIC ON THE GROUND ALONG THE PROPOSED INSTALLATION WITH ENOUGH OVERLAP TO COMPLETELY ENCIRCLE THE FINISHED SIZE OF THE BERM.
- PLACE THE ROCK ALONG THE CENTER OF THE WIRE TO THE DESIGNATED HEIGHT.
- WRAP THE STRUCTURE WITH THE PREVIOUSLY PLACED WIRE MESH SECURE ENOUGH SO THAT WHEN WALKED ACROSS THE STRUCTURE RETAINS IT'S SHAPE.
- SECURE WITH TIE WIRE.
- THE ENDS OF THE BERM SHOULD BE TIED INTO EXISTING UPSLOPE GRADE AND THE BERM SHOULD BE BURIED IN A TRENCH APPROX. 4 INCHES DEEP TO PREVENT FAILURE OF THE CONTROL.
- THE ROCK BERM SHOULD BE LEFT IN PLACE UNTIL ALL UPSTREAM AREAS ARE STABILIZED AND ACCUMULATED SILT REMOVED.

INSPECTION AND MAINTENANCE GUIDELINES:
- INSPECTION SHOULD BE MADE WEEKLY AND AFTER EACH RAINFALL EVENT BY THE RESPONSIBLE PARTY. FOR INSTALLATIONS IN STREAMBEDS, ADDITIONAL DAILY INSPECTIONS SHOULD BE MADE.
- REMOVE SEDIMENT AND OTHER DEBRIS WHEN BUILDUP REACHES 6 INCHES AND DISPOSE OF THE ACCUMULATED SILT IN AN APPROVED MANNER.
- REMOVE ANY LOOSE WIRE SHEATHING.
- THE BERM SHOULD BE RESHAPED AS NEEDED DURING INSPECTION.
- THE BERM SHOULD BE REPLACED WHEN THE STRUCTURE CEASES TO FUNCTION AS INTENDED DUE TO SILT ACCUMULATION AMONG THE ROCKS, WASHOUT, CONSTRUCTION TRAFFIC DAMAGE, ETC.

The Architect/Engineer assumes responsibility for appropriate use of this standard.

REVISION NOTE: ADOPTED 6/21/2006

CITY OF GEORGETOWN
CONSTRUCTION STANDARDS AND DETAILS
ROCK BERM DETAIL

DRAWING NAME: EC03 | SCALE: NTS | DATE: 1/2003 | DRAWN BY: MRS | APPROVED BY: TRB

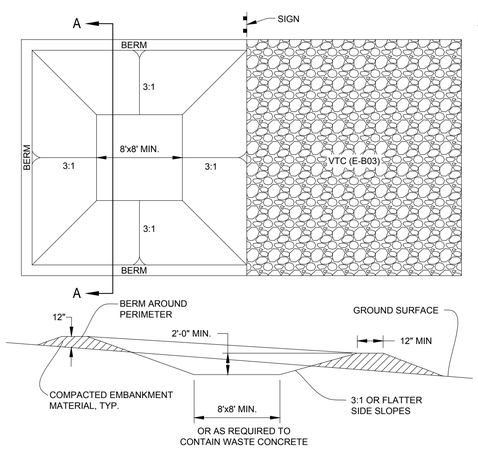

CROSS-SECTION A-A

CONCRETE WASHOUT AREA

CONCRETE WASHOUT AREA INSTALLATION NOTES
1. SELECT A SUITABLE LOCATION FOR CONCRETE WASHOUT AREA(S). (TO BE PLACED A MINIMUM OF 100' FROM DRAINAGE WAYS, BODIES OF WATER, AND INLETS.)
2. LOCATION FOR CONCRETE WASHOUT SHALL BE ADDED TO APPROVED SWP3 KEPT ON SITE.
3. THE CONCRETE WASHOUT AREA SHALL BE INSTALLED PRIOR TO ANY CONCRETE PLACEMENT ON SITE.
4. VEHICLE TRACKING CONTROL (VTC E-B03) IS REQUIRED AT THE ACCESS POINT.
5. SIGNS SHALL BE PLACED AT THE CONSTRUCTION ENTRANCE, AT THE WASHOUT AREA, AND ELSEWHERE AS NECESSARY TO CLEARLY INDICATE THE LOCATION OF THE CONCRETE WASHOUT AREA TO OPERATORS OF CONCRETE TRUCKS AND PUMP RIGS.
6. EXCAVATED MATERIAL SHALL BE UTILIZED IN PERIMETER BERM CONSTRUCTION.

CONCRETE WASHOUT AREA MAINTENANCE NOTES
1. THE CONCRETE WASHOUT AREA SHALL BE REPAIRED AND ENLARGED OR CLEANED OUT AS NECESSARY TO MAINTAIN CAPACITY FOR WASTED CONCRETE.
2. AT THE END OF CONSTRUCTION, ALL CONCRETE SHALL BE REMOVED FROM THE SITE AND DISPOSED OF AT AN APPROVED WASTE SITE.
3. WHEN THE CONCRETE WASHOUT AREA IS REMOVED, THE DISTURBED AREA SHALL BE DRILL SEEDED AND CRIMP MULCHED OR OTHERWISE STABILIZED IN A MANNER APPROVED BY THE CITY.
4. INSPECT WEEKLY, DURING AND AFTER ANY STORM EVENT.

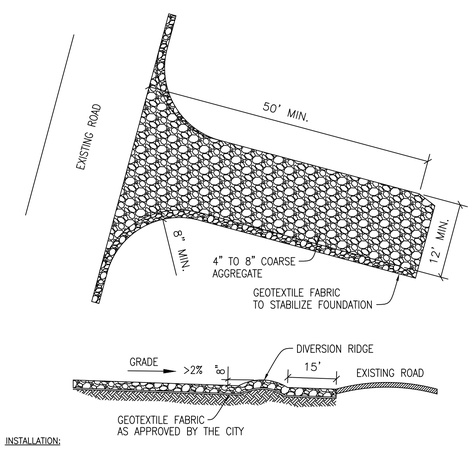

INSTALLATION:
- CLEAR THE AREA OF DEBRIS, ROCKS OR PLANTS THAT WILL INTERFERE WITH INSTALLATION.
- GRADE THE AREA FOR THE ENTRANCE TO FLOW BACK ON TO THE CONSTRUCTION SITE. RUNOFF FROM THE STABILIZED CONSTRUCTION
- PLACE GEOTEXTILE FABRIC AS APPROVED BY THE CITY.
- PLACE ROCK AS APPROVED BY THE CITY.

INSPECTIONS AND MAINTENANCE GUIDELINES:
- THE ENTRANCE SHOULD BE MAINTAINED IN A CONDITION, WHICH WILL PREVENT TRACKING OR FLOWING OF SEDIMENT ONTO PUBLIC RIGHTS–OF–WAY. THIS MAY REQUIRE PERIODIC TOP DRESSING WITH ADDITIONAL STONE AS CONDITIONS DEMAND AND REPAIR AND/OR CLEANOUT OF ANY MEASURES USED TO TRAP SEDIMENT.
- ALL SEDIMENT SPILLED, DROPPED, WASHED OR TRACKED ON TO PUBLIC RIGHTS–OF–WAY SHOULD BE REMOVED IMMEDIATELY BY CONTRACTOR.
- WHEN NECESSARY, WHEELS SHOULD BE CLEANED TO REMOVE SEDIMENT PRIOR TO ENTRANCE ONTO PUBLIC RIGHTS–OF–WAY.
- WHEN WASHING IS REQUIRED, IT SHOULD BE DONE ON AN AREA STABILIZED WITH CRUSHED STONE THAT DRAINS INTO AN APPROVED SEDIMENT TRAP OR SEDIMENT BASIN.
- ALL SEDIMENT SHOULD BE PREVENTED FROM ENTERING ANY STORM DRAIN, DITCH OR WATER COURSE BY USING APPROVED METHODS.

The Architect/Engineer assumes responsibility for appropriate use of this standard.

REVISION NOTE: ADOPTED 6/21/2006

CITY OF GEORGETOWN
CONSTRUCTION STANDARDS AND DETAILS
STABILIZED CONSTRUCTION ENTRANCE

DRAWING NAME: EC06 | SCALE: NTS | DATE: 1/2003 | DRAWN BY: MRS | APPROVED BY: TRB

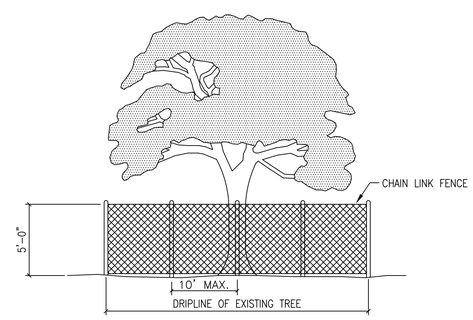

NOTES:
1. TREE PROTECTION FENCES SHALL BE INSTALLED PRIOR TO THE COMMENCEMENT OF ANY SITE PREPARATION WORK (CLEARING, GRUBBING OR GRADING).
2. FENCES SHALL COMPLETELY SURROUND THE TREE, OR CLUSTERS OF TREES; WILL BE LOCATED AT THE OUTERMOST LIMIT OF THE TREE BRANCHES (DRIPLINE), AND WILL BE MAINTAINED THROUGHOUT THE CONSTRUCTION PROJECT IN ORDER TO PREVENT THE FOLLOWING:
   A. SOIL COMPACTION IN THE ROOT ZONE AREA RESULTING FROM VEHICULAR TRAFFIC, OR STORAGE OF EQUIPMENT OR MATERIALS.
   B. ROOT ZONE DISTURBANCES DUE TO GRADE CHANGES (GREATER THAN SIX INCHES (6") CUT OR FILL, OR TRENCHING NOT REVIEWED AND AUTHORIZED BY THE CITY.
   C. WOUNDS TO EXPOSED ROOTS, TRUNKS OR LIMBS BY MECHANICAL EQUIPMENT.
   D. OTHER ACTIVITIES DETRIMENTAL TO TREES, SUCH AS CHEMICAL STORAGE, CEMENT TRUCK CLEANING AND FIRE.
3. EXCEPTIONS TO INSTALLING FENCES AT TREE DRIPLINES MAY BE PERMITTED IN THE FOLLOWING CASES:
   A. WHERE PERMEABLE PAVING IS TO BE INSTALLED, ERECT THE FENCE AT THE OUTER LIMITS OF THE PERMEABLE PAVING AREA.
   B. WHERE TREES ARE CLOSE TO PROPOSED BUILDINGS, ERECT THE FENCE NO CLOSER THAN SIX FEET (6'–0") TO BUILDING.

The Architect/Engineer assumes responsibility for appropriate use of this standard.

REVISION NOTE: ADOPTED 6/21/2006

CITY OF GEORGETOWN
CONSTRUCTION STANDARDS AND DETAILS
TREE PROTECTION – CHAIN LINK FENCE

DRAWING NAME: EC09 | SCALE: NTS | DATE: 1/2003 | DRAWN BY: MRS | APPROVED BY: TRB

REV	DESCRIPTION	DATE	APR
	Record Drawing		

DESIGNED BY: DAZ
REVIEWED BY: TMH
DRAWN BY: DAZ

BGE, INC.
1701 DIRECTORS BOULEVARD, SUITE 1000
AUSTIN, TX 78744
TBPE Registration No. F-1046
TEL: 512-879-0400 www.bgeinc.com

WILCO RANCH PHASE 3 SECTION 2
HUTTO, TEXAS

EROSION DETAILS

SUBMITTAL DATE: 12-10-2020

STATE OF TEXAS
TIMOTHY M. HOLLAND
94848
LICENSED
PROFESSIONAL ENGINEER
8/3/2021

SHEET
31 OF 44

G:\TXCProjects\Ashton_Woods\80224-00-Wilco_Ranch_Ph3_Sec2\LDV01_CADD\01_Sht\sC-SP-DET-LPH 3-SEC 2.dwg Layout: EROSION DETAILS Plotted: 8/3/2021 8:43:18 AM

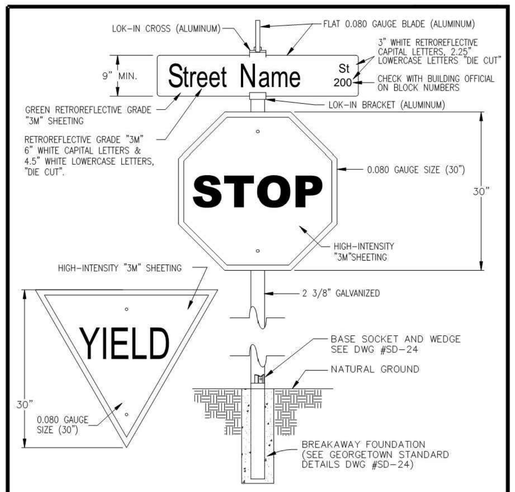

NOTES:
1. 7-FOOT MIN. HEIGHT FROM GROUND TO BOTTOM OF SIGN.
2. ALL SIGNS TO BE IN CONFORMANCE WITH THE CURRENT EDITION OF THE TEXAS MANUAL OF UNIFORM TRAFFIC CONTROL DEVICES (TMUTCD).
3. ALL SIGNAGE SHEETINGS SHALL BE HIGH-INTENSITY "3M" SHEETING.

CITY OF HUTTO CONSTRUCTION STANDARDS AND DETAILS	DRAWING NO. SD-03	
	UPDATED: 11/30/17	
STANDARD STREET SIGN DETAIL HUTTO UTILITY SYSTEMS	DRAWN BY: MSL	
	SCALE: N.T.S.	
	FILE NAME: SD03.DWG	

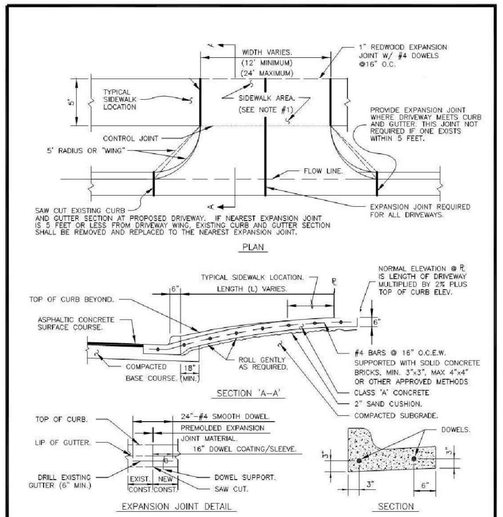

NOTES:
1. THE SIDEWALK AREA OF THE DRIVEWAY SHALL SLOPE TOWARD THE STREET PAVING AT NO MORE THAN 1.5%.
2. CONTROL JOINT DIMENSIONS PER DETAIL SD-06.

CITY OF HUTTO CONSTRUCTION STANDARDS AND DETAILS	DRAWING NO. SD-04	
	UPDATED: 4/1/2014	
RESIDENTIAL DRIVEWAY HUTTO UTILITY SYSTEMS	DRAWN BY: MSL	
	SCALE: N.T.S.	
	FILE NAME: SD04.DWG	

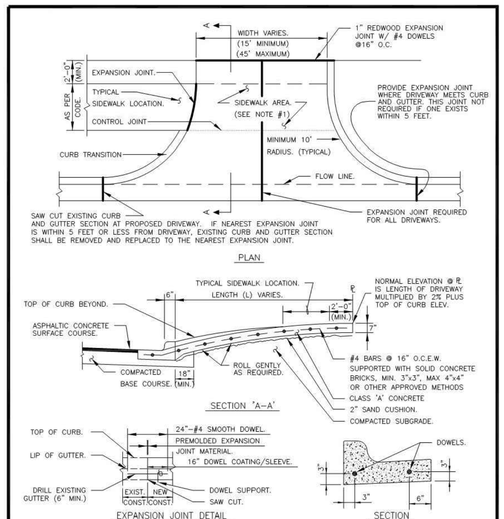

NOTE:
1. THE SIDEWALK AREA OF THE DRIVEWAY SHALL SLOPE TOWARD THE STREET PAVING AT NO MORE THAN 1.5%.
2. CONTROL JOINT DIMENSIONS PER DETAIL SD-06.

CITY OF HUTTO CONSTRUCTION STANDARDS AND DETAILS	DRAWING NO. SD-05	
	UPDATED: 4/1/2014	
COMMERCIAL DRIVEWAY HUTTO UTILITY SYSTEMS	DRAWN BY: MSL	
	SCALE: N.T.S.	
	FILE NAME: SD05.DWG	

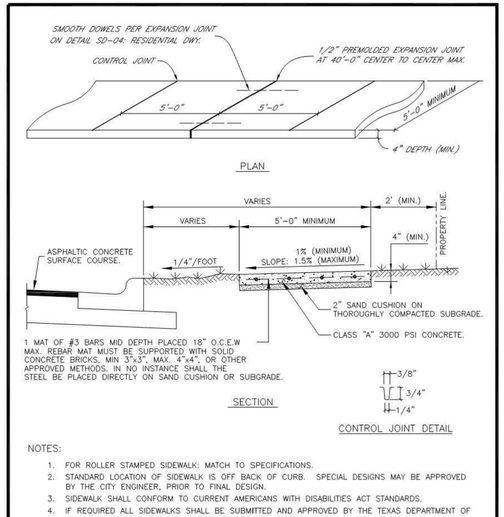

NOTES:
1. FOR ROLLER STAMPED SIDEWALK: MATCH TO SPECIFICATIONS.
2. STANDARD LOCATION OF SIDEWALK IS OFF BACK OF CURB. SPECIAL DESIGNS MAY BE APPROVED BY THE CITY ENGINEER, PRIOR TO FINAL DESIGN.
3. SIDEWALK SHALL CONFORM TO CURRENT AMERICANS WITH DISABILITIES ACT STANDARDS.
4. IF REQUIRED ALL SIDEWALKS SHALL BE SUBMITTED AND APPROVED BY THE TEXAS DEPARTMENT OF LICENSING AND REGULATION BY THE ENGINEER OF RECORD.
5. ANY VARIANCE IN TEXTURE, GRADE OR ALIGNMENT MUST BE APPROVED BY THE TEXAS DEPARTMENT OF LICENSING AND REGULATION.

CITY OF HUTTO CONSTRUCTION STANDARDS AND DETAILS	DRAWING NO. SD-06	
	UPDATED: 4/1/2014	
SIDEWALK DETAIL HUTTO UTILITY SYSTEMS	DRAWN BY: MSL	
	SCALE: N.T.S.	
	FILE NAME: SD06.DWG	

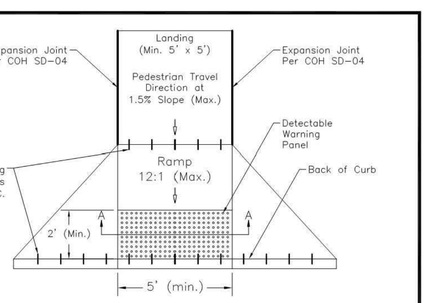

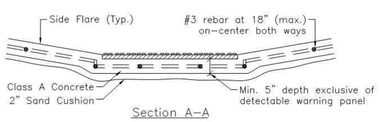

Section A-A

NOTES:
1. Curb ramps and detectable warning materials must be compliant with 2010 ADA Standards for Accessible Design and the 2012 TAS.
2. Detectable warning panels to be cast-in-place cast iron detectable warning plates manufactured by East Jordan Iron Works or Neenah Foundry.
3. Detectable warning panels to be installed per manufacturer's recommendations.
4. Detectable warning panels shall be located such that the edge nearest the curb line is at the back of curb. Align the rows of domes perpendicular to the grade break between the ramp run and the roadway.
5. Detectable warning panel to be contrasting color to the adjacent surfaces, including side flares.
6. Rebar to be installed per detail SD-06.

CITY OF HUTTO CONSTRUCTION STANDARDS AND DETAILS	DRAWING NO. SD-09	
	UPDATED: 2015-04-01	
STANDARD CURB RAMP HUTTO UTILITY SYSTEMS	DRAWN BY: MSL	
	SCALE: N.T.S.	
	FILE NAME: SD09.DWG	

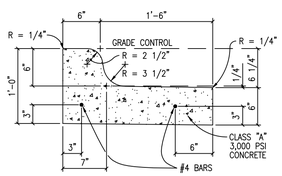

SPILL CURB

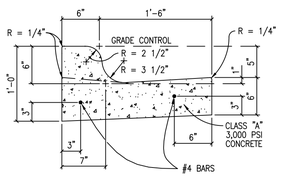

CATCH AND LAYDOWN CURB

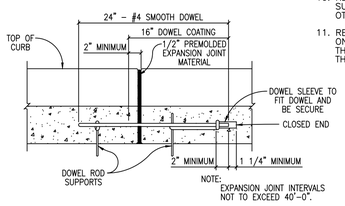

CURB DOWEL DETAIL

NOTES:
1. ALL WORK AND MATERIAL SHALL CONFORM TO ASTM A615, A615M, C309, AND D1752. BROOM FINISH EXPOSED SURFACE.
2. CONTRACTION JOINT SPACING 10' MAX.
3. EXPANSION JOINTS AS PER STD. ASTM D-1752.
4. 1/2" EXPANSION JOINT MATERIAL SHALL BE PROVIDED WHERE CURB IS ADJACENT TO SIDEWALK OR RIP-RAP.
5. TRANSITIONS BETWEEN CURBS OR DIFFERING CROSS SECTIONS SHALL OCCUR OVER A 20 FOOT LENGTH AS APPROVED BY THE ENGINEER OR THE CITY OF GEORGETOWN.
6. ALL CONCRETE SHALL BE CLASS A, 3000 PSI.
7. ALL SURFACES THAT ARE CHIPPED OR OTHERWISE DAMAGED DURING CONSTRUCTION SHALL BE REPAIRED.
8. THE FOLLOWING SCHEME OF REINFORCEMENT SHALL BE REQUIRED. THE MANNER OF PLACEMENT AND LOCATION SHALL BE TO THE SATISFACTION OF THE ENGINEER OR THE CITY OF GEORGETOWN.
   A. ALL CURB AND CURB AND GUTTER (REINFORCED) SHALL HAVE TWO #4 LONGITUDINAL REINFORCING BARS.
9. REINFORCING BARS SHALL BE LAPPED A MINIMUM OF 15 INCH.
10. REINFORCING BARS SHALL BE SUPPORTED WITH REBAR CHAIRS OR OTHER APPROVED METHODS.
11. REBAR SUPPORTS ARE NOT REQUIRED ON MACHINE PLACED CURB PROVIDED THAT REBAR IS PROPERLY GUIDED INTO THE CURB SECTION.

The Architect/Engineer assumes responsibility for appropriate use of this standard.

CITY OF GEORGETOWN CONSTRUCTION STANDARDS AND DETAILS CURB AND GUTTER DETAILS	REVISION NOTE: ADOPTED 6/21/2006	
	DRAWING NAME: SD06	
	SCALE: NTS / DATE:	
	DRAWN BY: MRS / APPROVED BY: TRB	

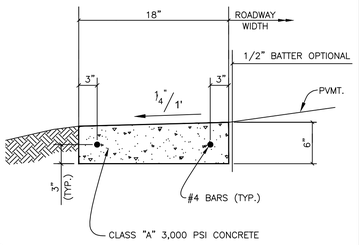

RIBBON CURB

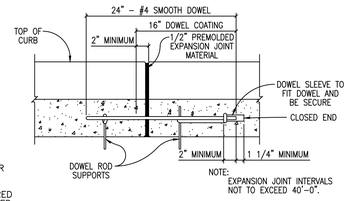

CURB DOWEL DETAIL

NOTES:
1. ALL WORK AND MATERIAL SHALL CONFORM TO ASTM A615, A615M, C309, AND D1752. BROOM FINISH EXPOSED SURFACE.
2. CONTRACTION JOINT SPACING 10' MAX.
3. EXPANSION JOINTS AS PER STD. ASTM D-1752.
4. 1/2" EXPANSION JOINT MATERIAL SHALL BE PROVIDED WHERE CURB IS ADJACENT TO SIDEWALK OR RIP-RAP.
5. TRANSITIONS BETWEEN CURBS OR DIFFERING CROSS SECTIONS SHALL OCCUR OVER A 20 FOOT LENGTH AS APPROVED BY THE ENGINEER OR TH CITY OF GEORGETOWN.
6. ALL CONCRETE SHALL BE CLASS A, 3000 PSI.
7. ALL SURFACES THAT ARE CHIPPED OR OTHERWISE DAMAGED DURING CONSTRUCTION SHALL BE REPAIRED.
8. ONE OF THE FOLLOWING SCHEMES OF REINFORCEMENT SHALL BE REQUIRED. THE MANNER OF PLACEMENT AND LOCATION SHALL BE TO THE SATISFACTION OF THE ENGINEER OR THE CITY OF GEORGETOWN.
   A. CURB AND GUTTER (REINFORCED) SHALL HAVE LONGITUDINAL REINFORCING BARS AS FOLLOWS: THREE #4,
   B. ALL TYPES OF CURB (REINFORCED) SHALL HAVE #4 BAR FOR LONGITUDINAL REINFORCEMENT.
9. REINFORCING BARS SHALL BE LAPPED A MINIMUM OF 15 INCH.
10. REINFORCING BARS SHALL BE SUPPORTED WITH REBAR CHAIRS OR OTHER APPROVED METHODS.
11. REBAR SUPPORTS ARE NOT REQUIRED ON MACHINE PLACED CURB PROVIDED THAT REBAR IS PROPERLY GUIDED INTO THE CURB SECTION.

The Architect/Engineer assumes responsibility for appropriate use of this standard.

CITY OF GEORGETOWN CONSTRUCTION STANDARDS AND DETAILS RIBBON CURB DETAILS	REVISION NOTE: ADOPTED 6/21/2006	
	DRAWING NAME: SD08	
	SCALE: NTS / DATE: 1/2003	
	DRAWN BY: MRS / APPROVED BY: TRB	

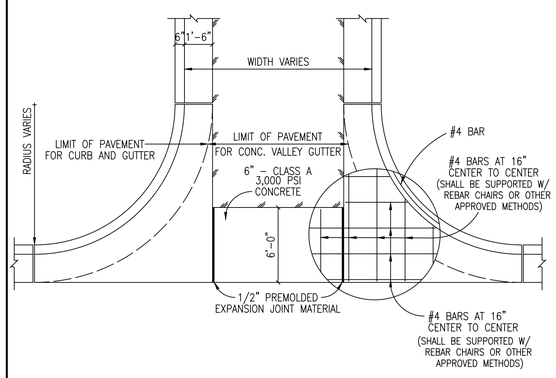

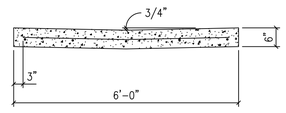

The Architect/Engineer assumes responsibility for appropriate use of this standard.

CITY OF GEORGETOWN CONSTRUCTION STANDARDS AND DETAILS CONCRETE VALLEY GUTTER DETAIL	REVISION NOTE: ADOPTED 6/21/2006	
	DRAWING NAME: SD03	
	SCALE: NTS / DATE: 1/2003	
	DRAWN BY: MRS / APPROVED BY: TRB	

REV	DESCRIPTION	DATE	APR
	Record Drawing		

DESIGNED BY: DAZ
REVIEWED BY: TMH
DRAWN BY: DAZ

BGE, INC.
1701 DIRECTORS BOULEVARD, SUITE 1000
AUSTIN, TX 78744
TBPE Registration No. F-1046
TEL: 512-879-0400 www.browngay.com

WILCO RANCH PHASE 3 SECTION 2
HUTTO, TEXAS

STREET DETAILS (1 OF 2)

SUBMITTAL DATE: 12-10-2020

STATE OF TEXAS
TIMOTHY M. HOLLAND
94848
LICENSED
PROFESSIONAL ENGINEER
8/3/2021

SHEET
32 OF 44

G:\TXCProjects\Ashton_Woods\80224-00-Wilco_Ranch_Ph3_Sec2\LDV01_CADD\01_Site\C-SP-DETL-PH 3-SEC 2.dwg Layout: STREET DETAILS (1 OF 2) Plotted: 8/3/2021 8:43:20 AM

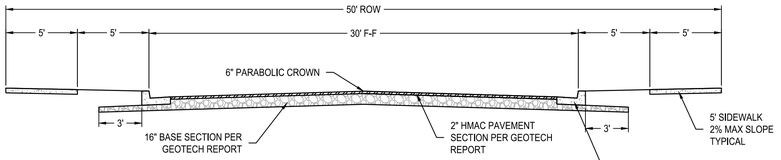

LOCAL STREET CROSS SECTION (30 MPH)
NT.S.

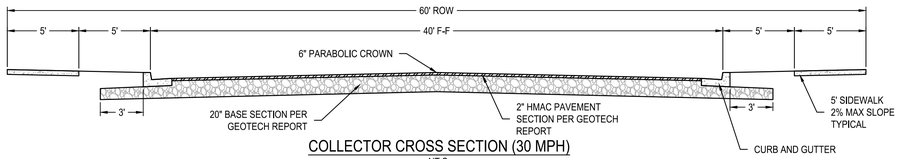

COLLECTOR CROSS SECTION (30 MPH)
NT.S.

EACH ROADWAY OF DIVIDED HIGHWAY SHALL BE BARRICADED, IN THE SAME MANNER.

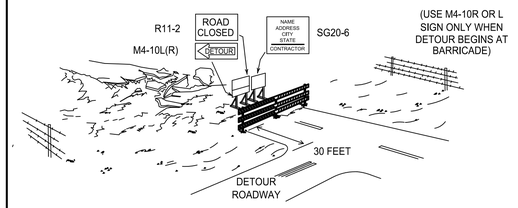

PERSPECTIVE VIEW

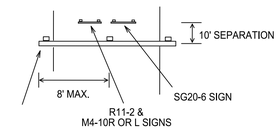

PLAN VIEW

1). R11-2 AND M4-10 SIGNS SHOULD BE MOUNTED ON INDEPENDENT SUPPORTS AT 7' MOUNTING HEIGHT IN CENTER OF ROADWAY.
2). ADVANCE SIGNING, INCLYDE CONSTRUCTION WARNING, SIGNS AND DETOUR SIGNING SHALL BE AS SPECIFIED ELSEWHERE IN THE PLANS.
3). THE THREE RAILS ON TYPE III BARRICADES SHALL BE REFLECTIVE ORANGE AND REFLECTIVE WHITE STRIPES ON ONE SIDE FACING ONE-WAY TRAFFIC AND BOTH SIDES FOR TWO-WAY TRAFFIC.
4). BARRICADE STRIPING SHOULD SLANT DOWNWARD IN THE DIRECTON OF DETOUR.
5). ALL SIGNS TO BE IN CONFORMANCE WITH THE CURRENT EDITION OF THE TEXAS MANUAL OF UNIFORM TRAFFIC CONTROL DEVICES (TMUTCD).

The Architect/Engineer assumes responsibility for appropriate use of this standard.

EST. 1848 GEORGETOWN TEXAS Georgetown Utility Systems Your Community Owned Utility	CITY OF GEORGETOWN CONSTRUCTION STANDARDS AND DETAILS TYPE III CONSTRUCTION BARRICADE	REVISION NOTE: ADOPTED 6/21/2006 DRAWING NAME: SD22 SCALE: NTS · DATE: 1/2003 DRAWN BY: MRS · APPROVED BY: TRB

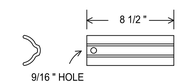

WEDGE

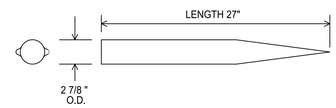

BASE SOCKET

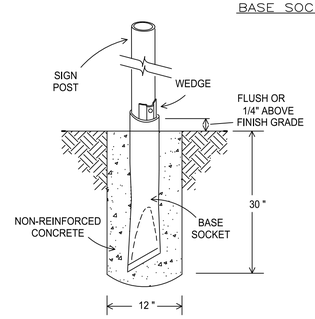

TYPICAL ASSEMBLY

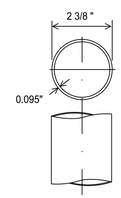

SIGN POST

The Architect/Engineer assumes responsibility for appropriate use of this standard.

EST. 1848 GEORGETOWN TEXAS Georgetown Utility Systems Your Community Owned Utility	CITY OF GEORGETOWN CONSTRUCTION STANDARDS AND DETAILS POZ-LOC (BREAKAWAY FOUNDATION)	REVISION NOTE: ADOPTED 6/21/2006 DRAWING NAME: SD24 SCALE: NTS · DATE: 1/2003 DRAWN BY: MRS · APPROVED BY: TRB

REV	DESCRIPTION	DATE	APR
	Record Drawing		

DESIGNED BY: DAZ
REVIEWED BY: TMH
DRAWN BY: DAZ

BGE, INC.
1701 DIRECTORS BOULEVARD, SUITE 1000
AUSTIN, TX 78744
TBPE Registration No. F-1046
TEL: 512-879-0400 www.browngay.com

WILCO RANCH PHASE 3 SECTION 2
HUTTO, TEXAS

STREET DETAILS (2 OF 2)

SUBMITTAL DATE: 12-10-2020

STATE OF TEXAS
TIMOTHY M. HOLLAND
94848
LICENSED
PROFESSIONAL ENGINEER
8/3/2021

SHEET
33 OF 44

G:\TXC\Projects\Ashton_Woods\8022-00-Wilco_Ranch_Ph3_Sec2\LDV01_CADD\01_Sht\sC-SP-DETL-PH 3-SEC 2.dwg Layout: STREET DETAILS (2 OF 2) Plotted: 8/3/2021 8:43:21 AM

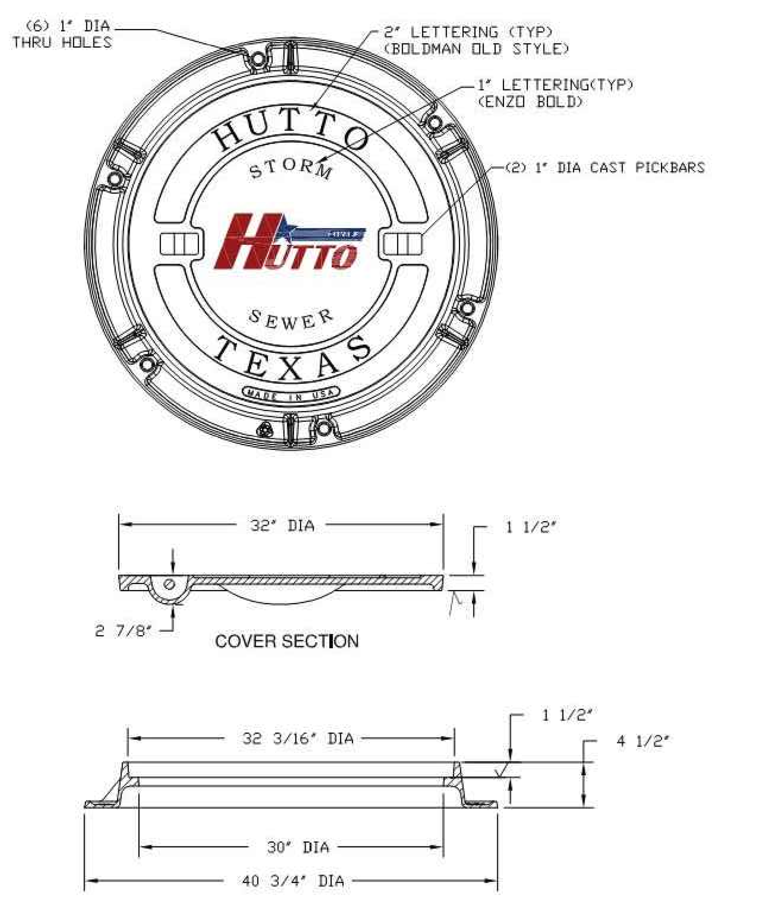

NOTES
1. STANDARD STORMSEWER MANHOLE SET TO BE EAST JORDAN IRON WORKS, INC. CATALOG NO. V1420RG/ V1432-3DI, OR APPROVED EQUAL. COVER TO BE STAMPED "STORM SEWER."
2. STANDARD STORMSEWER MANHOLE SET TO BE HEAVY DUTY LOAD RATED.
3. FOR MORE DETAILED SPECIFICATIONS, REFER TO EAST JORDAN IRON WORKS, INC. REFERENCE PRODUCT DRAWINGS 41432105A01 AND 41432105.
4. MANHOLE COVER TO BE DUCTILE IRON PER ASTM A536 (70-50-05). SEE EAST JORDAN IRON WORKS, INC. CATALOG NO. V1432-3.
5. MANHOLE FRAME TO BE GRAY IRON PER ASTM A48 CL35B.

CITY OF HUTTO
CONSTRUCTION STANDARDS AND DETAILS
STANDARD STORMSEWER MANHOLE SET
ENGINEERING & PUBLIC WORKS

DRAWING NO.	SD01
UPDATED:	02/01/2019
DRAWN BY:	BB
SCALE:	N.T.S.
FILE NAME:	SD01.DWG

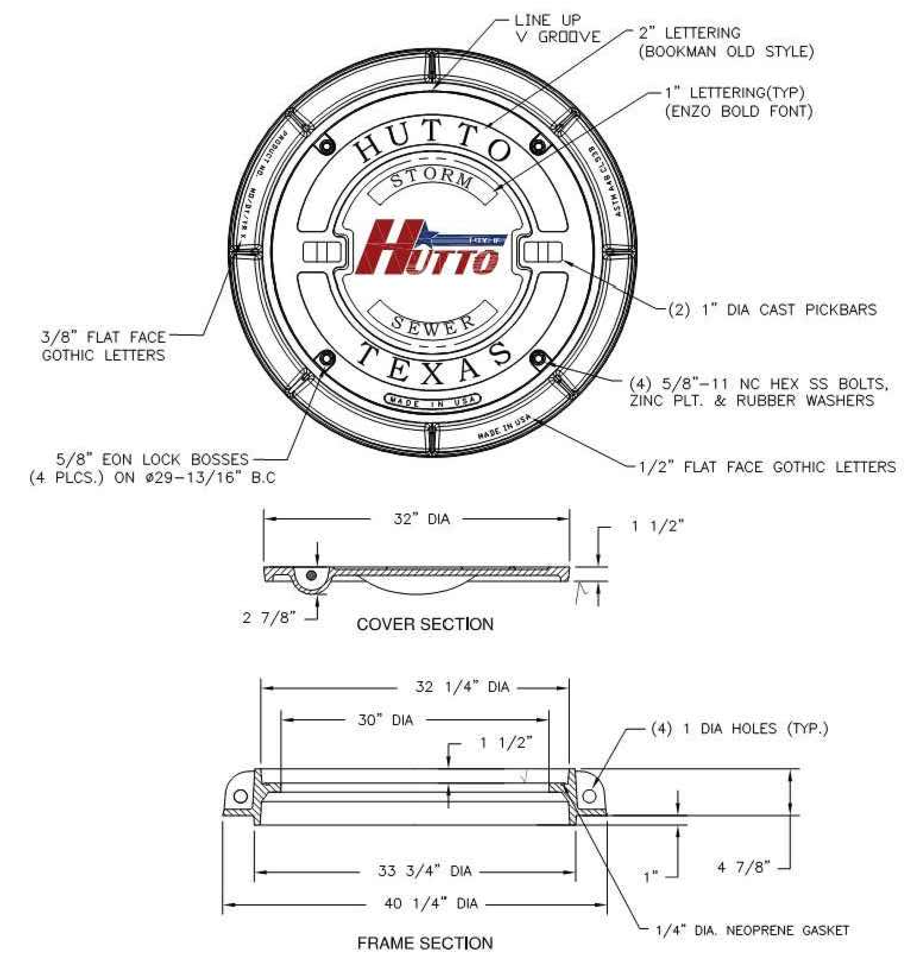

NOTES
1. BOLTED STORM WATER MANHOLE SET TO BE EAST JORDAN IRON WORKS, INC. CATALOG NO. V2432. OR APPROVED EQUAL, COVER TO BE STAMPED "STORM SEWER."
2. STANDARD STORMWATER MANHOLE SET TO BE HEAVY DUTY LOAD RATED.
3. FOR MORE DETAILED SPECIFICATIONS, REFER TO EAST JORDAN IRON WORKS, INC. REFERENCE PRODUCT DRAWING 42432114W01
4. FOR STANDARD STORMWATER MANHOLE SET REFER TO DETAIL SD01.
5. MANHOLE COVER TO BE DUCTILE IRON PER ASTM A536 (70-50-05). SEE EAST JORDAN IRON WORKS, INC CATALOG NO. V2432-3, PRODUCT DRAWING 42432114.
6. MANHOLE FRAME TO BE GRAY IRON PER ASTM A48 CL35B.

CITY OF HUTTO
CONSTRUCTION STANDARDS AND DETAILS
BOLTED STORMSEWER MANHOLE SET
ENGINEERING & PUBLIC WORKS

DRAWING NO.	SD1A
UPDATED:	02/01/2019
DRAWN BY:	BB
SCALE:	N.T.S.
FILE NAME:	SD1A.DWG

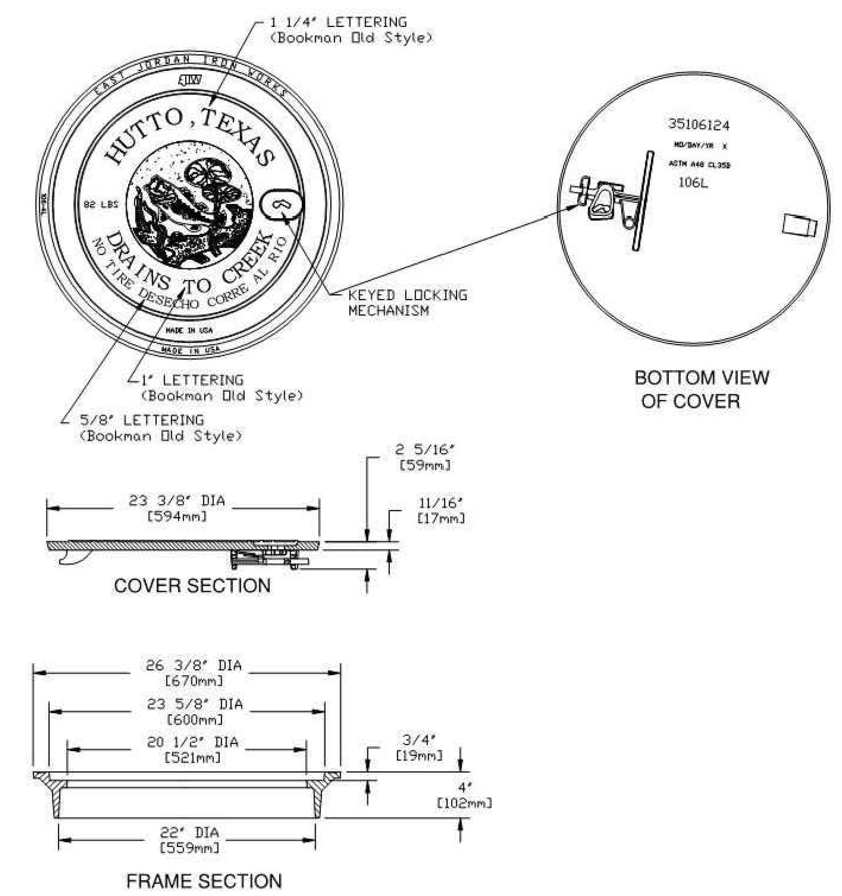

NOTES:
1. STANDARD CURB INLET LID SET TO BE EAST JORDAN IRON WORKS, INC. CATALOG NO. 106-4L, OR APPROVED EQUAL.
2. FOR MORE DETAILED SPECIFICATIONS, REFER TO EAST JORDAN IRON WORKS, INC. REFERENCE PRODUCT DRAWING 35506124.
3. CURB INLET LID AND FRAME TO BE GRAY IRON PER ASTM A48 CL35B.

CITY OF HUTTO
CONSTRUCTION STANDARDS AND DETAILS
STANDARD CURB INLET LID
HUTTO UTILITY SYSTEMS

DRAWING NO.	SD-02
UPDATED:	10/05/10
DRAWN BY:	MSL
SCALE:	N.T.S.
FILE NAME:	SD02.DWG

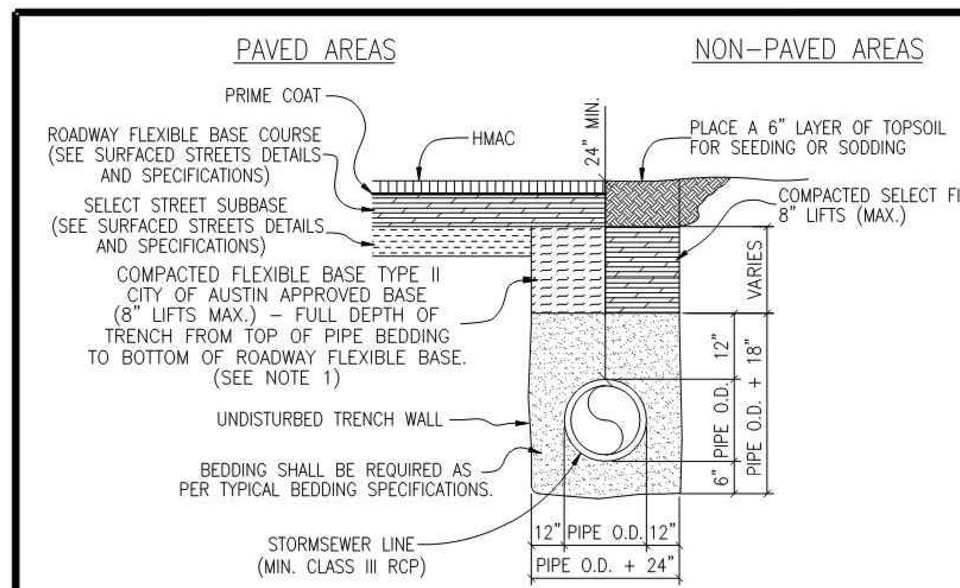

NOTES:
1. A MINIMUM OF ONE DENSITY TEST SHALL BE TAKEN EVERY TWO HUNDRED (200) FEET FOR EACH EIGHT (8) INCH LIFT OF BASE. PROCTORS FOR MATERIALS USED IN BACKFILLING SHALL BE OBTAINED BY A CERTIFIED LABORATORY. DENSITY TESTS SHALL BE CONDUCTED BY A CERTIFIED LABORATORY OR THE PERMITTEE'S CONSULTANTS. THE PERCENTAGE OF MAXIMUM DENSITY REQUIRED SHALL BE IN ACCORDANCE WITH THE LATEST EDITION OF "THE DEPARTMENT OF TRANSPORTATION STANDARD SPECIFICATIONS FOR ROAD AND BRIDGE CONSTRUCTION" AT THE TIME THE PERMIT WAS ISSUED. ALL DENSITY TESTS SHALL BE COMPLETED AND ACCEPTED ON EACH LAYER PRIOR TO ADDITIONAL BACKFILLING. A COPY OF ALL COMPLETED AND ACCEPTED DENSITY TESTS SHALL BE FURNISHED TO CITY OF HUTTO. BACKFILL COMPACTION SHALL BE A MINIMUM OF 95% MAXIMUM DENSITY PER TxDOT 113E SPECIFICATIONS.
2. THICKNESS FOR HMAC, ROADWAY FLEXIBLE BASE COURSE, AND SELECT STREET SUBBASE PER GEOTECHNICAL ENGINEER RECOMMENDATIONS.
3. CONTRACTOR OR ENGINEER MAY USE FLOWABLE BACKFILL AS AN ALTERNATE BACKFILL MATERIAL.
4. STORM SEWER PIPE SHALL BE REINFORCED CONCRETE CLASS III UNLESS DEPTH OF PIPE REQUIRES A STRONGER CLASS.
5. ALL JOINTS SHALL BE WRAPPED WITH GEOTEXTILE FABRIC PER DETAIL SD-08.

CITY OF HUTTO
CONSTRUCTION STANDARDS AND DETAILS
STORM SEWER TRENCH AND EMBEDMENT
HUTTO UTILITY SYSTEMS

DRAWING NO.	SD-07
UPDATED:	12/13/17
DRAWN BY:	BB
SCALE:	N.T.S.
FILE NAME:	SD07.DWG

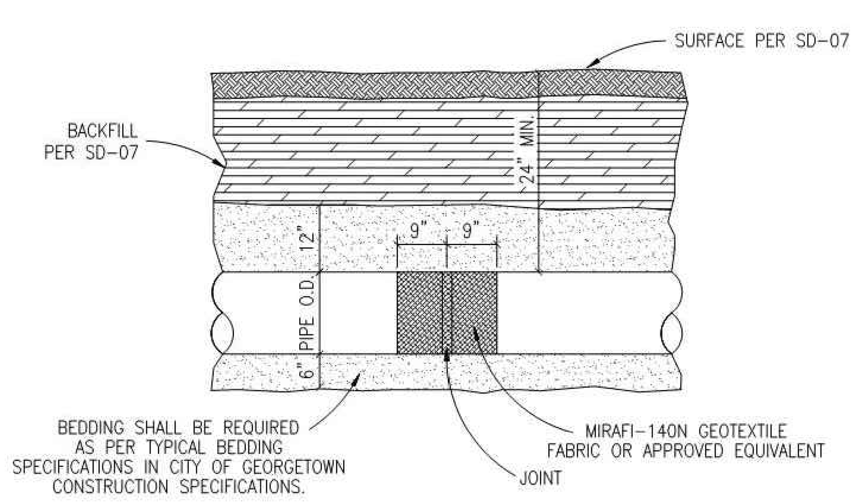

NOTES
1. PIPE SHALL BE REINFORCED CONCRETE PIPE CLASS III UNLESS THE DEPTH OF PIPE REQUIRES A STRONGER CLASS.
2. ALL FITTINGS AND WYES SHALL BE MANUFACTURED AND NOT CONSTRUCTED ON THE PROJECT WITHOUT PRIOR APPROVAL FROM THE CITY.
3. ALL JOINTS SHALL BE WRAPPED WITH MIRAFI-140N GEOTEXTILE FABRIC OR APPROVED EQUIVALENT. EACH JOINT SHALL BE WRAPPED WITH 18" WIDE FABRIC CENTERED ON THE JOINT.

CITY OF HUTTO
CONSTRUCTION STANDARDS AND DETAILS
STORM SEWER TRENCH AND EMBEDMENT (PROFILE)
HUTTO UTILITY SYSTEMS

DRAWING NO.	SD-08
UPDATED:	10/27/14
DRAWN BY:	MSL
SCALE:	N.T.S.
FILE NAME:	SD08.DWG

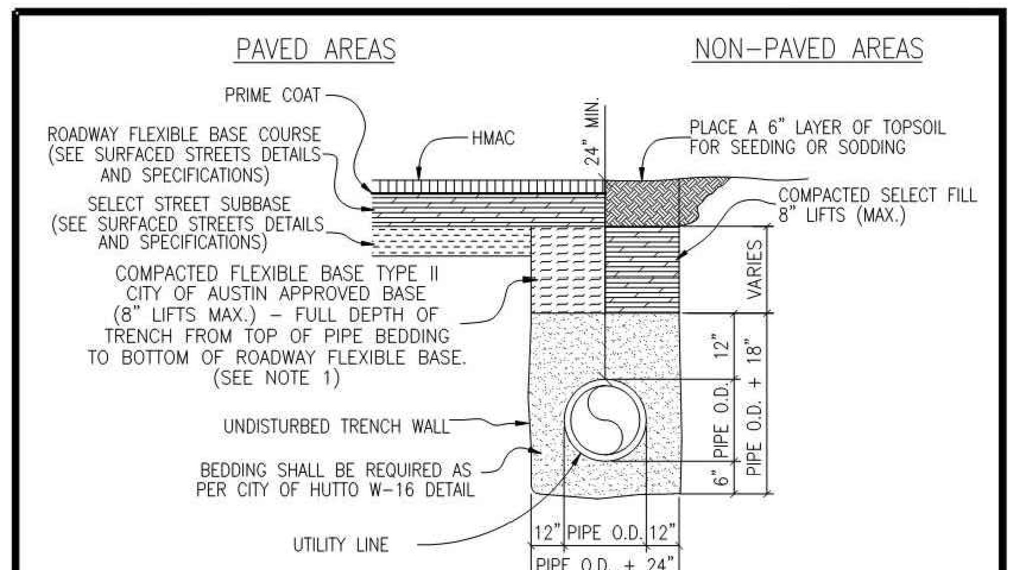

NOTES:
1. A MINIMUM OF ONE DENSITY TEST SHALL BE TAKEN EVERY TWO HUNDRED (200) FEET FOR EACH EIGHT (8) INCH LIFT OF BASE. PROCTORS FOR MATERIALS USED IN BACKFILLING SHALL BE OBTAINED BY A CERTIFIED LABORATORY. DENSITY TESTS SHALL BE CONDUCTED BY A CERTIFIED LABORATORY OR THE PERMITTEE'S CONSULTANTS. THE PERCENTAGE OF MAXIMUM DENSITY REQUIRED SHALL BE IN ACCORDANCE WITH THE LATEST EDITION OF "THE DEPARTMENT OF TRANSPORTATION STANDARD SPECIFICATIONS FOR ROAD AND BRIDGE CONSTRUCTION" AT THE TIME THE PERMIT WAS ISSUED. ALL DENSITY TESTS SHALL BE COMPLETED AND ACCEPTED ON EACH LAYER PRIOR TO ADDITIONAL BACKFILLING. A COPY OF ALL COMPLETED AND ACCEPTED DENSITY TESTS SHALL BE FURNISHED TO CITY OF HUTTO. BACKFILL COMPACTION SHALL BE A MINIMUM OF 95% MAXIMUM DENSITY PER TxDOT 113E SPECIFICATIONS.
2. THESE SPECIFICATIONS MAY BE SUPERSEDED BY THE GOVERNING AGENCY.
3. CITY ENGINEER MAY GIVE PERMISSION TO USE FLOWABLE BACKFILL AS AN ALTERNATE BACKFILL MATERIAL.
4. STORM SEWER PIPE SHALL BE REINFORCED CONCRETE CLASS III UNLESS DEPTH OF PIPE REQUIRES A STRONGER CLASS.
5. ALL JOINTS SHALL BE WRAPPED WITH GEOTEXTILE FABRIC PER DETAIL SD-08.

CITY OF HUTTO
CONSTRUCTION STANDARDS AND DETAILS
UTILITY TRENCH AND EMBEDMENT
HUTTO UTILITY SYSTEMS

DRAWING NO.	SD-10
UPDATED:	12/13/17
DRAWN BY:	BB
SCALE:	N.T.S.
FILE NAME:	SD10.DWG

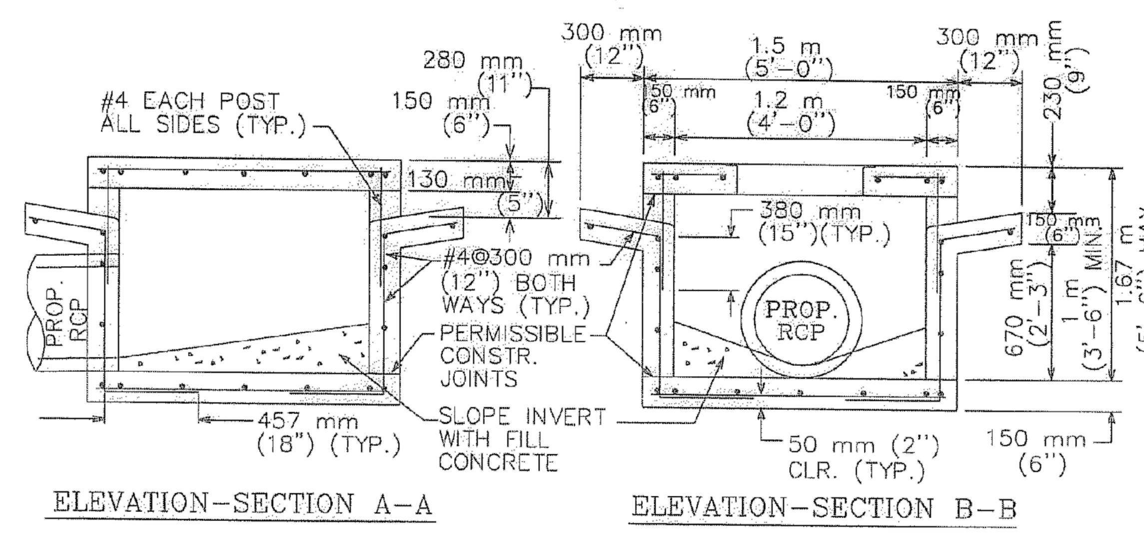

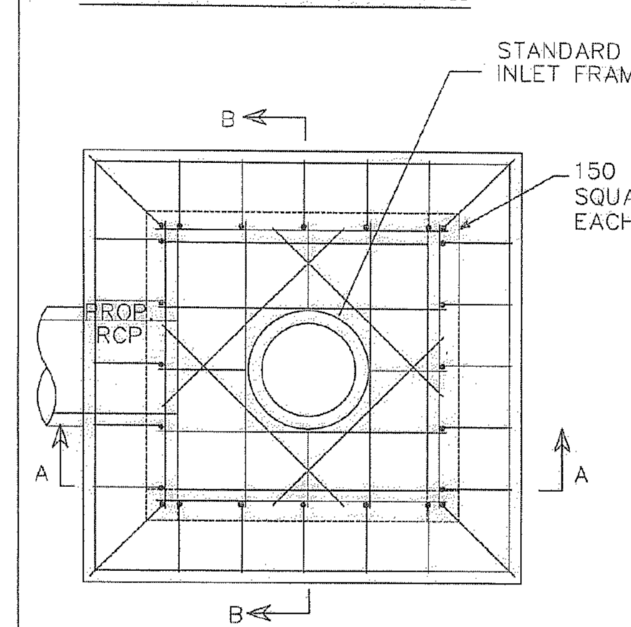

PLAN

N.T.S.

NOTES:
1. CHAMFER ALL EXPOSED EDGES 20 mm (3/4").
2. REINFORCING STEEL SHALL BE CUT OR FIELD-BENT AS REQUIRED TO CLEAR PIPE AND MANHOLE OPENING. ALL CUT STEEL SHALL BE REPLACED WITH ADDITIONAL DIAGONAL BARS OF THE SAME DIAMETER.
3. INLET FRAME AND COVER SHALL BE IN ACCORDANCE WITH CITY OF AUSTIN STANDARD 503S-1.
4. CONCRETE COVERAGE OF STEEL SHALL BE 50 mm (2") MIN. AT ALL SURFACES.
5. ANY MODIFICATION TO THIS STANDARD SHALL BE THE RESPONSIBLITY OF THE DESIGN ENGINEER.

CITY OF AUSTIN
WATERSHED PROTECTION DEPARTMENT
Arthur C. Romero, P.E. 8/18/2010
ADOPTED

4-SIDED AREA INLET

THE ARCHITECT/ENGINEER ASSUMES RESPONSIBILITY FOR APPROPRIATE USE OF THIS STANDARD

STANDARD NO. 508S-9

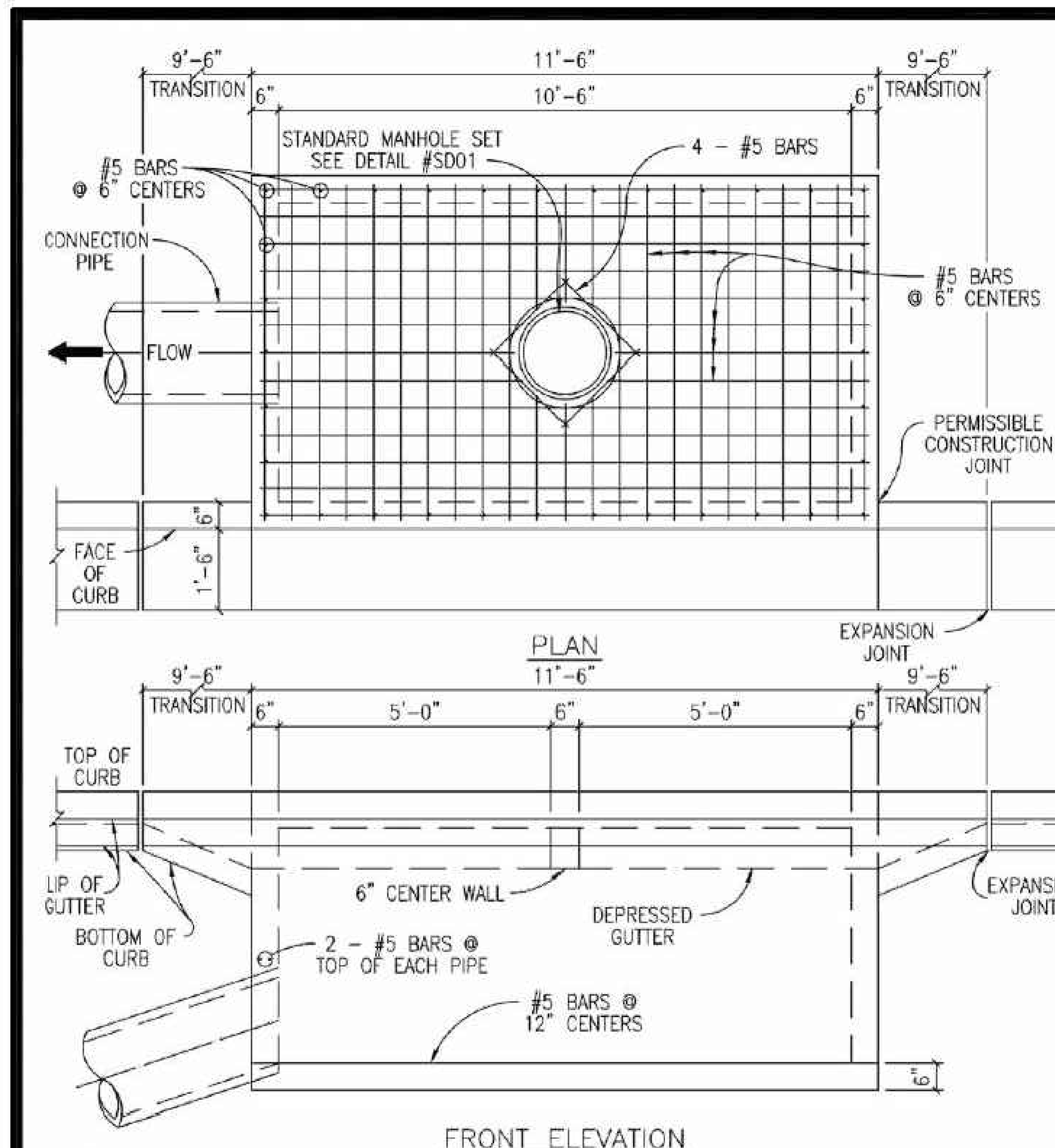

NOTES:
1. ALL CONCRETE SHALL BE CLASS "A" 3,000 PSI CONCRETE.
2. STORM SEWER PIPE MATERIAL TO BE R.C.P. (CLASS III) UNLESS OTHERWISE APPROVED BY THE CITY OF HUTTO.

CITY OF HUTTO
CONSTRUCTION STANDARDS AND DETAILS
CURB INLET
ENGINEERING & PUBLIC WORKS

DRAWING NO.	SD10
UPDATED:	08/15/18
DRAWN BY:	BB
SCALE:	N.T.S.
FILE NAME:	SD10.DWG

APR	DATE	DESCRIPTION	REV
		Record Drawing	

DESIGNED BY: DAZ
REVIEWED BY: TMH
DRAWN BY: DAZ

BGE, INC.
1701 DIRECTORS BOULEVARD, SUITE 1000
AUSTIN, TX 78744
TBPE Registration No. F-1046
TEL: 512-879-0400 www.browngay.com

WILCO RANCH PHASE 3 SECTION 2
HUTTO, TEXAS

STORM DETAILS(1 OF 2)

SUBMITTAL DATE: 12-10-2020

STATE OF TEXAS
TIMOTHY M. HOLLAND
94848
LICENSED PROFESSIONAL ENGINEER
8/3/2021

SHEET
34 OF 44

G:\TXC\Projects\Ashton_Woods\8022-00-Wilco_Ranch_Ph3_Sec2\LD\01_CADD\01_Shts\C-SP-DETL-PH 3-SEC 2.dwg Layout: STORM DETAILS(1 OF 2) Plotted: 8/3/2021 8:43:24 AM

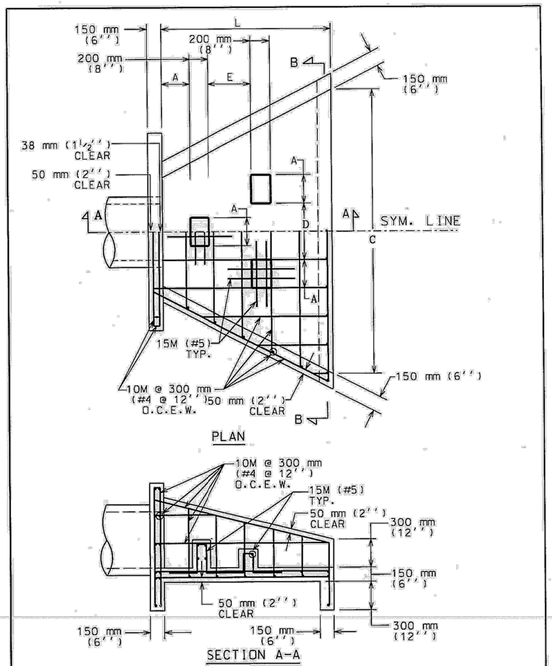

CITY OF AUSTIN DEPARTMENT OF WATERSHED PROTECTION AND DEVELOPMENT REVIEW	STANDARD HEADWALL AND ENERGY DISSIPATORS	
Bill Bardner 8/20/07 ADOPTED	THE ARCHITECT/ENGINEER ASSUMES RESPONSIBILITY FOR APPROPRIATE USE OF THIS STANDARD.	STANDARD NO. 508S-13 1 OF 2

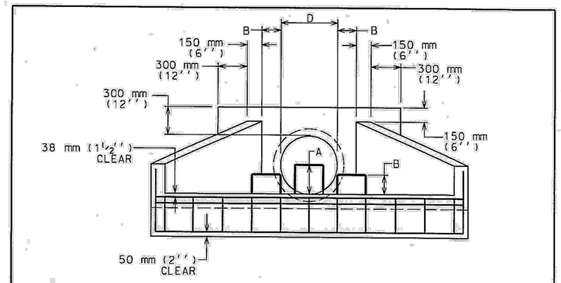

SECTION B-B

NOTES:

1. ALL CONCRETE SHALL BE TYPE "C" AS PER SPEC. 403S. CONCRETE FOR STURCTURES.
2. CHAMFER ALL EXTERNAL VISIBLE CORNERS.
3. DISSIPATOR BLOCKS REQUIRED ON DISCHARGE HEADWALLS ONLY.

D	457 mm (18'')	533 mm (21'')	610 mm (24'')	685 mm (27'')	765 mm (30'')	838 mm (33'')	914 mm (36'')	.067 m (42'')	.219 m (48'')	.372 m (54'')	.524 m (60'')	
A	225 mm (9'')	250 mm (10'')	300 mm (12'')	350 mm (14'')	375 mm (15'')	400 mm (16'')	450 mm (18'')	525 mm (21'')	600 mm (24'')	675 mm (27'')	750 mm (30'')	
B	150 mm (6'')	175 mm (7'')	200 mm (8'')	225 mm (9'')	250 mm (10'')	275 mm (11'')	300 mm (12'')	350 mm (14'')	400 mm (16'')	450 mm (18'')	500 mm (20'')	
C	2.29 m (90'')	2.67 m (105'')	3.05 m (120'')	343 m (135'')	3.81 m (150'')	4.19 m (165'')	4.57 m (180'')	5.33 m (210'')	6.10 m (240'')	6.86 m (270'')	7.62 m (300'')	
L	1.37 m (54'')	1.60 m (63'')	1.83 m (72'')	2.06 m (81'')	2.29 m (90'')	2.51 m (99'')	2.74 m (108'')	3.20 m (126'')	3.66 m (144'')	4.11 m (162'')	4.57 m (180'')	
E	300 mm (12'')	350 mm (14'')	400 mm (16'')	450 mm (18'')	500 mm (20'')	550 mm (22'')	600 mm (24'')	700 mm (28'')	800m (32'')	900 mm (36'')	1000 mm (40'')	

DIMENSIONS IN MILLIMETERS. METERS AND (INCHES).

DISCHARGE VELOCITIES GREATER THAN 3 METERS/SECOND (10 fps) REQUIRE ROCK OUTLET PROTECTION.

CITY OF AUSTIN DEPARTMENT OF WATERSHED PROTECTION AND DEVELOPMENT REVIEW	STANDARD HEADWALL AND ENERGY DISSIPATORS	
Bill Bardner 8/20/07 ADOPTED	THE ARCHITECT/ENGINEER ASSUMES RESPONSIBILITY FOR APPROPRIATE USE OF THIS STANDARD.	STANDARD NO. 508S-13 2 OF 2

REV	DESCRIPTION	DATE	APR
	Record Drawing		

DESIGNED BY: DAZ
REVIEWED BY: TMH
DRAWN BY: DAZ

BGE, INC.
1701 DIRECTORS BOULEVARD, SUITE 1000
AUSTIN, TX 78744
TBPE Registration No. F-1046
TEL: 512-879-0400 www.brownbgey.com

WILCO RANCH PHASE 3 SECTION 2
HUTTO, TEXAS

STORM DETAILS(2 OF 2)

SUBMITTAL DATE: 12-10-2020

STATE OF TEXAS
TIMOTHY M. HOLLAND
94848
LICENSED
PROFESSIONAL ENGINEER
8/3/2021

SHEET
35 OF 44

G:\TXC\Projects\Ashton_Woods\8022-00-Wilco_Ranch_Ph3_Sec2\LDV01_CADD\01_Sitts\C-SP-DETL-PH 3-SEC 2.dwg Layout: STORM DETAILS(2 OF 2) Plotted: 8/3/2021 8:43:27 AM

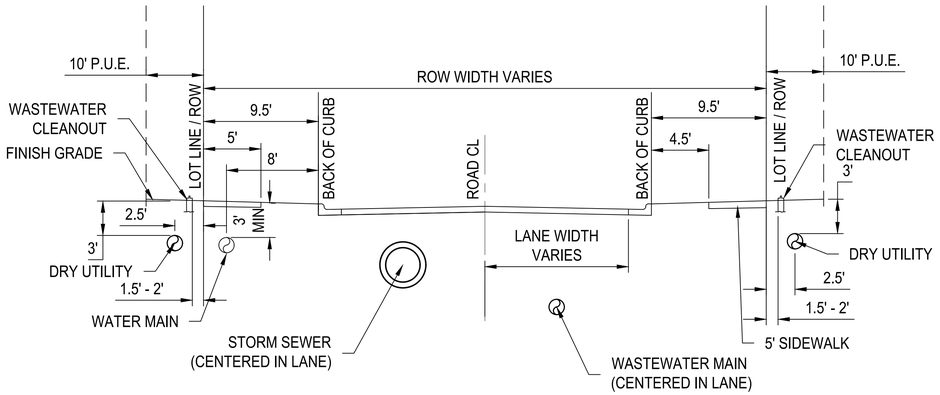

TYPICAL UTILITY CROSS SECTION

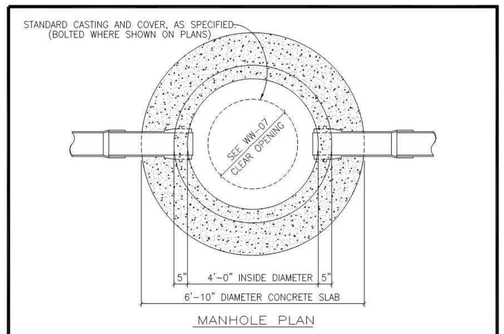

MANHOLE PLAN

CITY OF HUTTO NOTES:

MANHOLE DETAILS SHALL REFLECT THE CITY'S MINIMUM SPECIFICATIONS, AS STATED BELOW:

A. ALL MANHOLES SHALL BE 48" I.D., R.C.P., CLASS III, WITH RUBBER O-RING GASKET JOINTS CONFORMING TO ASTM C478, C433 AND C76.
B. ALL MANHOLES SHALL HAVE WATER-TIGHT FRAME AND COVER, WITH A MINIMUM 30" CLEAR OPENING, AS MANUFACTURED BY EAST JORDAN IRON WORKS (AS PER DETAIL # WW-07 & # WW-07A) OR APPROVED EQUAL.
C. ALL MANHOLES SHALL BE CONCRETE WITH CAST IRON FRAME AND COVER.
D. ALL MANHOLES SHALL HAVE A CONCENTRIC CONE.
E. MANHOLES MAY HAVE A FLAT LID, IF APPROVED BY CITY OF HUTTO, BEING 12" THICK WITH A MINIMUM 30" OPENING, AS MANUFACTURED BY CALVERT CONCRETE OR APPROVED EQUAL M.F.G. CONFORMING TO ASTM C478, 5000 P.S.I. CONCRETE, TRAFFIC BEARING, AND O-RING JOINT CONFORMING TO ASTM C443.
F. INVERTS AND FLEXIBLE SEAL BOOTS, PER ASTM C-923, SHALL BE CAST INTO BASE SECTION.
G. MINIMUM DROP BETWEEN INVERTS SHALL BE ONE-TENTH OF A FOOT (0.1').
H. TWO (2") INCH GRADE RINGS WITH AN I.D. TO MATCH FRAMES CLEAR OPENING, MINIMUM OF TWO (2), MAXIMUM OF FIVE (5) GRADE RINGS REQUIRED.

CITY OF HUTTO CONSTRUCTION STANDARDS AND DETAILS	DRAWING NO.	WW-02
	UPDATED:	09/20/10
STANDARD MANHOLE - PLAN HUTTO UTILITY SYSTEMS	DRAWN BY:	XXX
	SCALE:	N.T.S.
	FILE NAME:	WW02.DWG

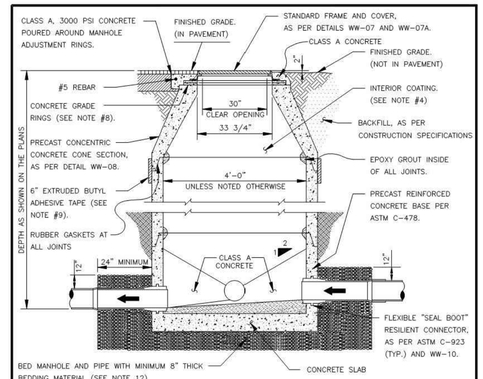

1. MANHOLES SHALL BE PRECAST ASTM C478 BELL AND SPIGOT WITH "O" RING JOINTS.
2. SEE CONSTRUCTION PLANS FOR MANHOLE SIZE, LOCATION, CONFIGURATION, TYPE OF TOP SECTION, VENTING REQUIREMENTS, PIPE SIZES AND TYPES.
3. SEE SPECIFICATIONS ON MATERIALS AND CONSTRUCTION.
4. ENTIRE INTERIOR OF WASTEWATER MANHOLES TO BE COATED WITH RAVEN 405, OR APPROVED EQUAL, WITH A UNIFORM THICKNESS OF 124 MILS AND A MINIMUM THICKNESS OF 100 MILS, APPLIED AFTER MANHOLE HAS PASSED THE VACUUM TEST.
5. ALL MANHOLE COVERS SHALL BE BOLTED AND GASKETED, WHEN MANHOLES ARE LOCATED OUTSIDE OF PAVEMENT.
6. MANHOLES TO BE VENTED ARE IDENTIFIED ON MANHOLE SCHEDULE, REFERENCE MANHOLE VENT DETAIL.
7. A FLOW CHANNEL SHALL BE CONSTRUCTED INSIDE MANHOLE TO DIRECT INFLUENT INTO THE FLOW STREAM. ALL P.V.C. PIPE SHALL BE REMOVED FROM INVERT.
8. FRAME ADJUSTMENT HEIGHT SHALL BE FIVE INCHES (5") MINIMUM AND EIGHTEEN INCHES (18") MAXIMUM.
9. EXTERIOR OF EACH JOINT TO BE WRAPPED IN 6" EXTRUDED BUTYL ADHESIVE TAPE WHEN MANHOLE IS LOCATED IN THE 100-YR FLOODPLAIN.
10. MANHOLES TO BE DESIGNED TO RESIST LATERAL AND VERTICAL SOIL FORCES RESULTING FROM MANHOLE DEPTH. ADDITIONALLY, MANHOLES LOCATED IN PAVEMENT TO BE DESIGNED FOR H20 TRAFFIC LOADING.
11. BASE SECTION SHALL BE DESIGNED FOR H-20 LOADING, PLUS EARTH LOAD AT 130 PCF.*
12. MANHOLE BASE BEDDING MATERIAL SPECS. FOR 3/4" WASHED GRAVEL:

SIEVE SIZE	% RETAINED
1 1/2"	0-10
1"	0-10
3/4"	45-80
3/8"	85-100
3/8"	95-100

CITY OF HUTTO CONSTRUCTION STANDARDS AND DETAILS	DRAWING NO.	WW-03
	UPDATED:	09/30/10
STANDARD MANHOLE - SECTION HUTTO UTILITY SYSTEMS	DRAWN BY:	MSL
	SCALE:	N.T.S.
	FILE NAME:	WW03.DWG

*MANHOLE BASE SECTION SHALL COMPLY WITH CITY OF GEORGETOWN TECHNICAL SPECIFICATIONS

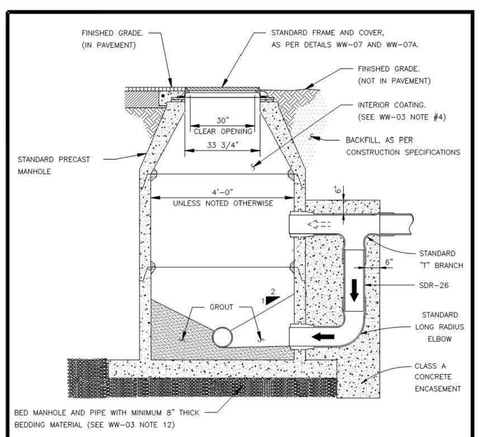

1. CONCRETE ENCASEMENT FOR DROP CONNECTION TO BE POURED INTEGRALLY WITH BOTH MANHOLE SLAB AND WALL.
2. DROP CONNECTIONS SHALL BE REQUIRED WHENEVER AN INFLUENT SEWER IS LOCATED TWO FEET (2') OR MORE ABOVE THE MAIN INVERT CHANNEL.
3. A FLOW CHANNEL SHALL BE CONSTRUCTED INSIDE MANHOLE TO DIRECT INFLUENT INTO FLOW STREAM.
4. MINIMUM PIPE SIZE FOR DROP IS EIGHT INCHES (8").
5. SEE STANDARD MANHOLE DETAIL (DWG. # WW-03) FOR ADDITIONAL REQUIREMENTS.

CITY OF HUTTO CONSTRUCTION STANDARDS AND DETAILS	DRAWING NO.	WW-04
	UPDATED:	09/23/10
DROP CONNECTION-PRECAST MANHOLE TYPE "A" HUTTO UTILITY SYSTEMS	DRAWN BY:	MSL
	SCALE:	N.T.S.
	FILE NAME:	WW04.DWG

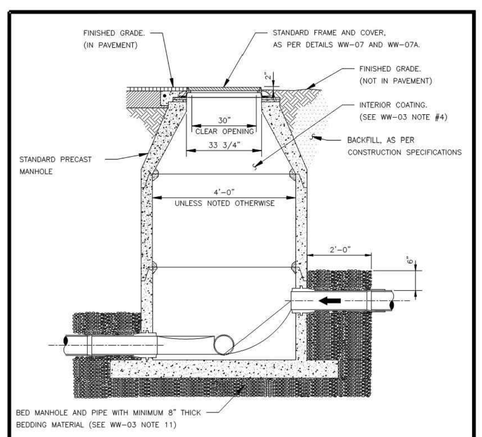

NOTES:
1. TO BE USED WHERE DROP IS SIX INCHES (6") TO TWO FEET (2'-0").
2. A FLOW CHANNEL SHALL BE CONSTRUCTED INSIDE MANHOLE TO DIRECT INFLUENT INTO FLOW STREAM.
3. CONSTRUCTION OF DROP SHALL PROVIDE A OVERSIZED SLAB TO EXTEND UNDER THE DROP CONNECTION.
4. MINIMUM PIPE SIZE FOR DROP IS EIGHT INCHES (8").
5. SEE STANDARD MANHOLE DETAIL (DWG. # WW-03) FOR ADDITIONAL REQUIREMENTS.

CITY OF HUTTO CONSTRUCTION STANDARDS AND DETAILS	DRAWING NO.	WW-05
	UPDATED:	09/23/10
DROP CONNECTION-PRECAST MANHOLE TYPE "B" HUTTO UTILITY SYSTEMS	DRAWN BY:	MSL
	SCALE:	N.T.S.
	FILE NAME:	WW05.DWG

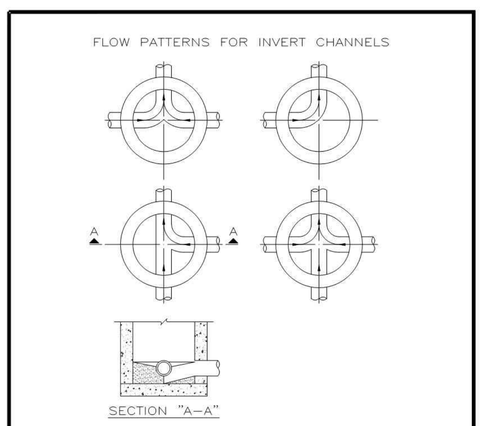

NOTES:
1. INVERT CHANNELS TO BE CONSTRUCTED FOR SMOOTH FLOW WITH NO OBSTRUCTIONS.
2. SPILLWAYS SHALL BE CONSTRUCTED BETWEEN PIPES WITH DIFFERENT INVERT ELEVATIONS PROVIDING FOR SMOOTH FLOW.
3. CHANNELS FOR FUTURE CONSTRUCTIONS (STUBS) SHALL BE CONSTRUCTED, FILLED WITH SAND, AND COVERED WITH 1" OF MORTAR.
4. SLOPE MANHOLE ITSELF WITH A 1:2 SLOPE FROM MANHOLE WALL TO CHANNEL.
5. INVERT SHALL BE A MINIMUM OF 1/2 THE DIAMETER OF THE LARGEST PIPE OR 4" DEEP.

CITY OF HUTTO CONSTRUCTION STANDARDS AND DETAILS	DRAWING NO.	WW-06
	UPDATED:	06/01/09
FLOW PATTERNS FOR INVERT CHANNELS HUTTO UTILITY SYSTEMS	DRAWN BY:	xxx
	SCALE:	N.T.S.
	FILE NAME:	WW06.DWG

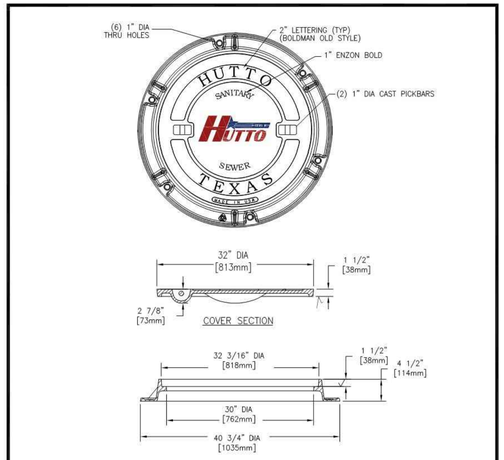

NOTES:
1. STANDARD WASTEWATER MANHOLE SET TO BE EAST JORDAN IRON WORKS, INC. CATALOG NO V1420RG/V1432DI OR CITY ENGINEER APPROVED EQUAL. COVER TO BE STAMPED "SANITARY SEWER."
2. STANDARD WASTEWATER MANHOLE SET TO BE HEAVY DUTY LOAD RATED.
3. FOR MORE DETAILED SPECIFICATIONS, REFER TO EAST JORDAN IRON WORKS, INC. REFERENCE PRODUCT DRAWING NO. 41432106A01.
4. FOR BOLTED WASTEWATER MANHOLE SET REFER TO CITY OF HUTTO DETAIL WW09.
5. MANHOLE COVER TO BE DUCTILE IRON PER ASTM A536 (70-50-05).
6. MANHOLE FRAME TO BE GRAY IRON PER ASTM A48 CL35B.

CITY OF HUTTO CONSTRUCTION STANDARDS AND DETAILS	DRAWING NO.	WW07
	UPDATED:	04/01/2019
STANDARD WASTEWATER MANHOLE SET ENGINEERING & PUBLIC WORKS	DRAWN BY:	BB
	SCALE:	N.T.S.
	FILE NAME	WW07.DWG

		APR
		DATE
	Record Drawing	DESCRIPTION
◁ ◁ ◁ ◁ ◁ ◁		REV

DESIGNED BY: DAZ
REVIEWED BY: TMH
DRAWN BY: DAZ

BGE, INC.
1701 DIRECTORS BOULEVARD, SUITE 1000
AUSTIN, TX 78744
TBPE Registration No. F-1046
TEL: 512-879-0400 www.browngay.com

WILCO RANCH PHASE 3 SECTION 2
HUTTO, TEXAS

WASTEWATER DETAILS (1 OF 3)

SUBMITTAL DATE: 12-10-2020

STATE OF TEXAS
TIMOTHY M. HOLLAND
94848
LICENSED PROFESSIONAL ENGINEER
9/3/2021

SHEET
36 OF 44

G:\TXC\Projects\Ashton_Woods\80222-00-Wilco_Ranch_Ph3_Sec2\LDV01_CADD\01_Sht\C-SP-DETL-PH 3-SEC 2.dwg Layout: WASTEWATER DETAILS (1 OF 3) Plotted: 8/3/2021 2:10:17 PM

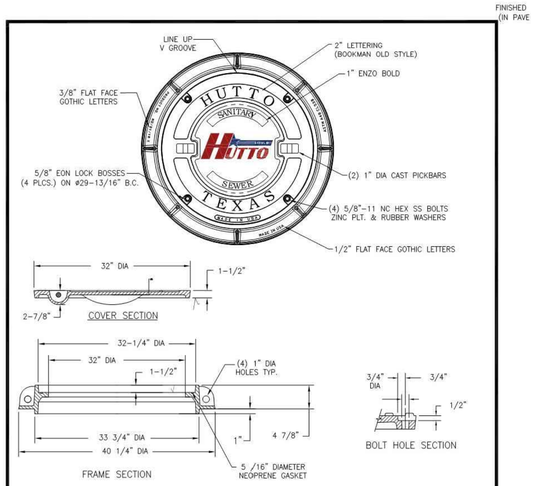

NOTES:
1. BOLTED WASTEWATER MANHOLE SET TO BE EAST JORDAN IRON WORKS, INC. CATALOG NO. B2432, OR CITY ENGINEER APPROVED EQUAL.
2. COVER TO BE STAMPED "SANITARY SEWER".
3. STANDARD WASTEWATER MANHOLE SET TO BE HEAVY DUTY LOAD RATED.
4. FOR MORE DETAILED SPECIFICATIONS, REFER TO EAST JORDAN IRON WORKS, INC. REFERENCE PRODUCT DRAWING 424321159W01.
5. FOR STANDARD WASTEWATER MANHOLE SET REFER TO COH DETAIL WW08.
6. MANHOLE COVER TO BE DUCTILE IRON PER ASTM A536 (70-50-05).
7. MANHOLE FRAME TO BE GRAY IRON PER ASTM A48 CL35B.

CITY OF HUTTO CONSTRUCTION STANDARDS AND DETAILS	DRAWING NO.	WW7A
	UPDATED:	02/01/2019
BOLTED WASTEWATER MANHOLE COVER ENGINEERING & PUBLIC WORKS	DRAWN BY:	BB
	SCALE:	N.T.S.
	FILE NAME:	WW7A.DWG

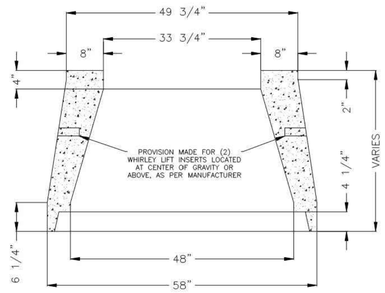

CITY OF HUTTO CONSTRUCTION STANDARDS AND DETAILS	DRAWING NO.	WW-08
	UPDATED:	09/13/16
PRECAST 48" CONCENTRIC CONCRETE CONE SECTION DETAIL HUTTO UTILITY SYSTEMS	DRAWN BY:	MSL
	SCALE:	N.T.S.
	FILE NAME:	WW08.DWG

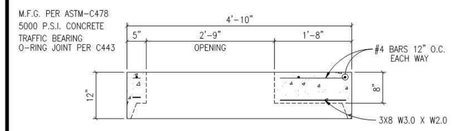

NOTES:
1. AVAILABLE WITH CAST IRON RING AND COVER CAST IN PLACE.
2. PERMITTED ONLY WITH WRITTEN APPROVAL.

CITY OF HUTTO CONSTRUCTION STANDARDS AND DETAILS	DRAWING NO.	WW-09
	UPDATED:	09/23/10
48" MANHOLE FLAT LID HUTTO UTILITY SYSTEMS	DRAWN BY:	MSL
	SCALE:	N.T.S.
	FILE NAME:	WW09.DWG

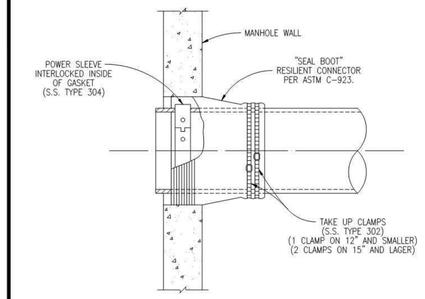

CITY OF HUTTO CONSTRUCTION STANDARDS AND DETAILS	DRAWING NO.	WW-10
	UPDATED:	06/01/09
FLEXIBLE "SEAL BOOT" CONNECTOR HUTTO UTILITY SYSTEMS	DRAWN BY:	xxx
	SCALE:	N.T.S.
	FILE NAME:	WW10.DWG

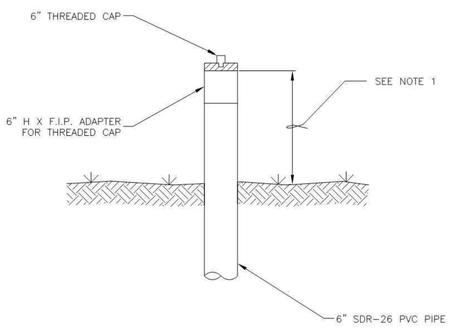

NOTES:
1. MINIMUM 24", MAXIMUM 36" ABOVE FINISHED GRADE. (ADJUSTMENT TO FINISHED GRADE SHALL OCCUR PRIOR TO ACCEPTANCE OR ISSUANCE OF CERTIFICATE OF OCCUPANCY)
2. FOR CLEAN-OUTS LOCATED IN CONCRETE SURFACES, SEE CITY OF AUSTIN DETAIL 520S-4.

CITY OF HUTTO CONSTRUCTION STANDARDS AND DETAILS	DRAWING NO.	WW-12
	UPDATED:	10/9/12
SEWER CLEAN-OUT DETAIL HUTTO UTILITY SYSTEMS	DRAWN BY:	MSL
	SCALE:	N.T.S.
	FILE NAME:	WW12.DWG

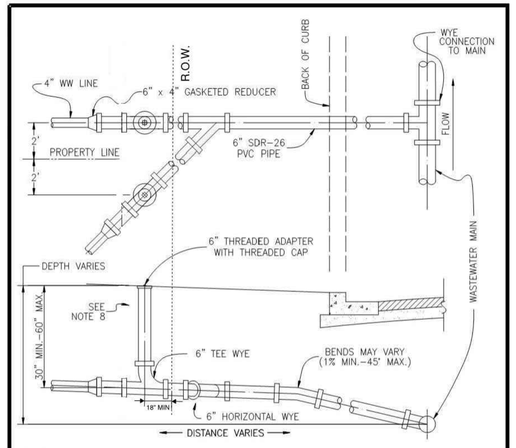

NOTES:
1. SUBDIVISION IMPROVEMENTS WILL END AT ROW WITH PLUGGED WATER-TIGHT CLEAN-OUT.
2. DURING LOT CONSTRUCTION, PLUG WILL BE REMOVED AND 6"x4" ELASTOMERIC GASKETED BELL REDUCER INSTALLED. BUSHINGS ARE NOT ALLOWED.
3. SOUDLY TAMP BACKFILL AT LEAST ONE FOOT (1'-0") ABOVE TOP OF PIPE. SERVICES UNDER PAVED AREAS SHALL BE BACKFILLED TO THE SAME SPECIFICATIONS AS SHOWN ON PAVEMENT REPLACEMENT DETAIL.
4. CONTRACTOR SHALL MARK ON A CLEAN SET OF PLANS **THE FINAL STATIONING OR DISTANCE AND DIRECTION** FROM MANHOLE TO EACH SERVICE LATERAL AND GIVE TO ENGINEER FOR RECORD DRAWING PURPOSES.
5. SERVICE LINE MATERIAL SHALL BE P.V.C., SDR-26.
6. CITY OF HUTTO RESPONSIBILITY ENDS AT THE CLEANOUT.
7. NO CLEAN-OUT SHALL BE SET IN SIDEWALK OR DRIVEWAY WITHOUT WRITTEN APPROVAL FROM CITY ENGINEER.
8. SEE CITY OF AUSTIN DETAIL 520S-4 FOR INSTALLATIONS IN CONCRETE SURFACES, CITY OF HUTTO DETAIL WW-12 FOR ALL OTHERS.

CITY OF HUTTO CONSTRUCTION STANDARDS AND DETAILS	DRAWING NO.	WW-13
	UPDATED:	11/07/17
SEWER SERVICE CONNECTIONS HUTTO UTILITY SYSTEMS	DRAWN BY:	MSL
	SCALE:	N.T.S.
	FILE NAME:	WW13.DWG

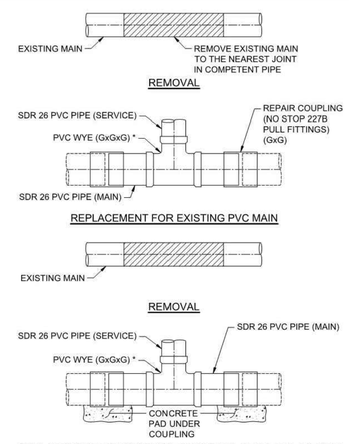

NOTES:
1. ALL WASTEWATER PIPING SHALL HAVE ELASTOMERIC GASKET TYPE JOINTS AND SLOPE DOWNWARD TO MAIN ONE PERCENT (1%) MINIMUM TO FORTY-FIVE PERCENT (45%) MAXIMUM.
2. DEPTH OF SERVICE AT PROPERTY LINE WILL BE SHOWN ON PLANS BY ENGINEER IF GREATER THAN FOUR FEET (4'), OTHERWISE THE INSTALLED DEPTH WILL BE FOUR FOOT (4') MINIMUM AND SIX FEET (6') MAXIMUM AT PROPERTY LINE.
3. REPLACE THE BEDDING AND BACKFILL IN ACCORDANCE WITH THE TRENCH EMBEDMENT DETAIL.

CITY OF HUTTO CONSTRUCTION STANDARDS AND DETAILS	DRAWING NO.	WW-13A
	UPDATED:	01/17/18
GASKETED SEWER FITTING FOR SEWER SERVICE CONNECTIONS TO EXISTING MAINS HUTTO UTILITY SYSTEMS	DRAWN BY:	BB
	SCALE:	N.T.S.
	FILE NAME:	WW13A.DWG

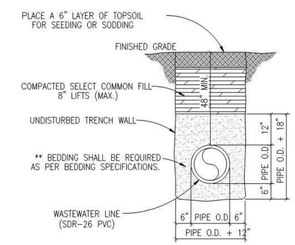

** TYPICAL BEDDING SPECIFICATIONS:

SIEVE SIZE	3/8" F % RETAINED	1/2" D % RETAINED	WASHED GRAVEL % RETAINED
1/2"	0	0	0
3/8"	0-2	5-25	-
4m	40-85	80-100	-
10m	95-100	96-100	-
3/4"	-	-	100

CITY OF HUTTO CONSTRUCTION STANDARDS AND DETAILS	DRAWING NO.	WW-16
	UPDATED:	06/01/09
TRENCH AND EMBEDMENT DETAIL UNDER NON-PAVED AREAS HUTTO UTILITY SYSTEMS	DRAWN BY:	CL
	SCALE:	N.T.S.
	FILE NAME:	WW16.DWG

REV	DESCRIPTION	DATE	APR
	Record Drawing		

DESIGNED BY: DAZ
REVIEWED BY: TMH
DRAWN BY: DAZ

BGE, INC.
1701 DIRECTORS BOULEVARD, SUITE 1000
AUSTIN, TX 78744
TBPE Registration No. F-1046
TEL: 512-879-0400 www.bowmgey.com

WILCO RANCH PHASE 3 SECTION 2
HUTTO, TEXAS

WASTEWATER DETAILS (2 OF 3)

SUBMITTAL DATE: 12-10-2020

STATE OF TEXAS
TIMOTHY M. HOLLAND
94848
LICENSED
PROFESSIONAL ENGINEER
8/3/2021

SHEET
37 OF 44

G:\TXC\Projects\Ashton_Woods\8022-00-Wilco_Ranch_Ph3_Sec2\LDV01_CADD\01_Sitis\C-SP-DET-L-PH 3-SEC 2.dwg Layout: WASTEWATER DETAILS (2 OF 3) Plotted: 8/3/2021 8:43:30 AM

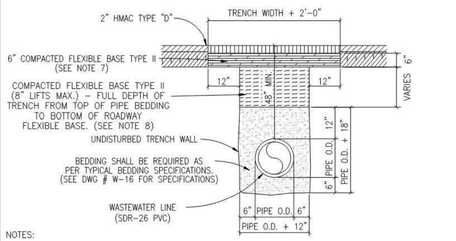

NOTES:

1. REPLACED BASE MATERIAL OVER DITCH SHALL BE TWICE THE THICKNESS OF THE ORIGINAL BASE.
2. BASE MATERIAL SHALL BE PLACED IN TWO OR THREE LAYERS AND EACH LAYER THOROUGHLY ROLLED OR TAMPED TO SPECIFIED MAXIMUM DENSITY.
3. ASPHALT CONCRETE PAVEMENT JOINTS SHALL BE MECHANICALLY SAWED.
4. SURFACE MATERIAL WILL BE CONSISTENT WITH THE EXISTING SURFACE.
5. A MINIMUM OF ONE DENSITY TEST SHALL BE TAKEN EVERY TWO HUNDRED (200) FEET FOR EACH SIX (6) INCH LIFT OF SUBGRADE AND EACH OPEN CUT CROSSING. PROCTORS FOR MATERIALS USED IN BACKFILLING SHALL BE OBTAINED BY A CERTIFIED LABORATORY. DENSITY TESTS SHALL BE CONDUCTED BY A CERTIFIED LABORATORY OR THE PERMITTEE'S CONSULTANTS. THE PERCENTAGE OF MAXIMUM DENSITY REQUIRED SHALL BE IN ACCORDANCE WITH THE LATEST EDITION OF "THE DEPARTMENT OF TRANSPORTATION STANDARD SPECIFICATIONS FOR ROAD AND BRIDGE CONSTRUCTION" AT THE TIME THE PERMIT WAS ISSUED. ALL DENSITY TESTS SHALL BE COMPLETED AND ACCEPTED ON EACH LAYER PRIOR TO ADDITIONAL BACKFILLING. A COPY OF ALL COMPLETED AND ACCEPTED DENSITY TESTS SHALL BE FURNISHED TO CITY OF HUTTO.
6. THESE SPECIFICATIONS MAY BE SUPERSEDED BY THE GOVERNING AGENCY.
7. FLEXIBLE BASE TYPE II: (ROADWAY BASE)
   TxDOT TYPE A – GRADE 2 OR BETTER CRUSHED LIMESTONE BASE COMPACTED TO 98% OF TxDOT 113E AT OPTIMUM MOISTURE. PROCTOR TO BE PROVIDED BY THE CONTRACTOR TO THE CITY INSPECTOR.
8. FLEXIBLE BASE TYPE II: (TRENCH BACKFILL)
   TxDOT TYPE A – GRADE 2 OR BETTER CRUSHED LIMESTONE BASE COMPACTED TO 95% OF TxDOT 113E AT OPTIMUM MOISTURE. PROCTOR TO BE PROVIDED BY THE CONTRACTOR TO THE CITY INSPECTOR.
9. CONTRACTOR OR ENGINEER MAY REQUEST FOR USE OF ALTERNATE BACKFILL MATERIAL. ALTERNATE MATERIALS AND TESTING PROTOCOL MUST BE SUBMITTED TO AND APPROVED BY THE CITY ENGINEER PRIOR TO USE.

CITY OF HUTTO CONSTRUCTION STANDARDS AND DETAILS	DRAWING NO. WW-17	
TRENCH AND EMBEDMENT AND PAVEMENT REPLACEMENT DETAIL UNDER EXISTING ROADWAY HUTTO UTILITY SYSTEMS	UPDATED: 06/01/09	
	DRAWN BY: xxx	
	SCALE: N.T.S.	
	FILE NAME: WW17.DWG	

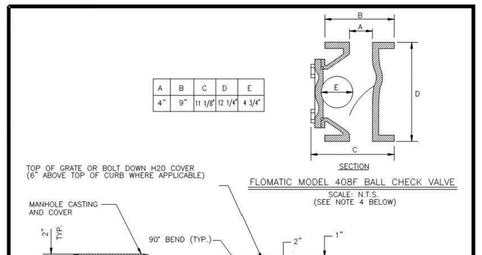

A	B	C	D	E
4"	9"	11 1/8"	12 1/4"	4 3/4"

FLOMATIC MODEL 408F BALL CHECK VALVE

SCALE: N.T.S.
(SEE NOTE 4 BELOW)

NOTES:

1. AIR INTAKE PIPE TO BE D.I.P., CLASS 53 WITH FLANGED CONNECTIONS.
2. ALL FITTINGS TO BE 150 PSIG RATED & ANSI/AWWA C110/A21.10.
3. SURFACE PREP ABOVE GROUND PIPING TO SSPC10-63, N.A.C.E. NO.2 STANDARD. APPLY EPOXY PRIMER 2-4 MIL, DFT FOLLOWED BY 2 COATS OF AMINE ADDUCT CURED, HIGH-BUILD EPOXY (TWO COMPONENT EPOXY POLYAMIDE) 8-10 MIL DFT, NON-LEAD CEDAR GREEN COLOR.
4. IF ELEVATION OF VENT OPENING IS LESS THAN 1-FT. ABOVE 100 YR. FLOODPLAIN, FLOMATIC MODEL 408F BALL CHECK VALVE OR EQUAL WITH FLOATING TYPE BALL TO BE INSTALLED AT DOWNTURNED OPENING OF VENT. (SEE DIMENSIONAL DETAIL ABOVE RIGHT). 16 MESH 304 S.S. INSECT SCREEN TO BE PLACED IN THE OPENING.

CITY OF HUTTO CONSTRUCTION STANDARDS AND DETAILS	DRAWING NO. WW-18	
MANHOLE VENT FOR BELOW GROUND INSTALLATION HUTTO UTILITY SYSTEMS	UPDATED: 09/28/10	
	DRAWN BY: XXX	
	SCALE: N.T.S.	
	FILE NAME: WW18.DWG	

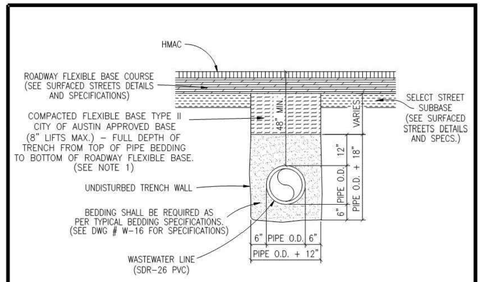

NOTES:

1. A MINIMUM OF ONE DENSITY TEST SHALL BE TAKEN EVERY TWO HUNDRED (200) FEET FOR EACH EIGHT (8) INCH LIFT OF BASE. PROCTORS FOR MATERIALS USED IN BACKFILLING SHALL BE OBTAINED BY A CERTIFIED LABORATORY. DENSITY TESTS SHALL BE CONDUCTED BY A CERTIFIED LABORATORY OR THE PERMITTEE'S CONSULTANTS. THE PERCENTAGE OF MAXIMUM DENSITY REQUIRED SHALL BE IN ACCORDANCE WITH THE LATEST EDITION OF "THE DEPARTMENT OF TRANSPORTATION STANDARD SPECIFICATIONS FOR ROAD AND BRIDGE CONSTRUCTION" AT THE TIME THE PERMIT WAS ISSUED. ALL DENSITY TESTS SHALL BE COMPLETED AND ACCEPTED ON EACH LAYER PRIOR TO ADDITIONAL BACKFILLING. A COPY OF ALL COMPLETED AND ACCEPTED DENSITY TESTS SHALL BE FURNISHED TO CITY OF HUTTO. BACKFILL COMPACTION SHALL BE A MINIMUM OF 95% MAXIMUM DENSITY PER TxDOT 113E SPECIFICATIONS.
2. THESE SPECIFICATIONS MAY BE SUPERSEDED BY THE GOVERNING AGENCY.
3. CONTRACTOR OR ENGINEER MAY REQUEST FOR USE OF ALTERNATE BACKFILL MATERIAL. ALTERNATE MATERIALS AND TESTING PROTOCOL MUST BE SUBMITTED TO AND APPROVED BY THE CITY PRIOR TO USE.

CITY OF HUTTO CONSTRUCTION STANDARDS AND DETAILS	DRAWING NO. WW-19	
TRENCH AND EMBEDMENT DETAIL UNDER PROPOSED ROADWAY ENGINEERING & PUBLIC WORKS	UPDATED: 06/01/18	
	DRAWN BY: BB	
	SCALE: N.T.S.	
	FILE NAME: WW19.DWG	

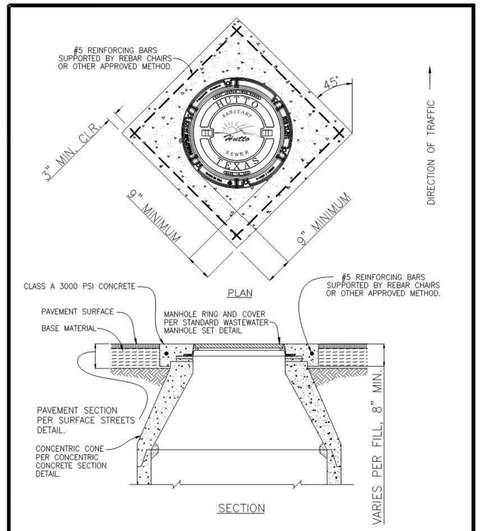

CITY OF HUTTO CONSTRUCTION STANDARDS AND DETAILS	DRAWING NO. WW-20	
CONCRETE APRON AROUND MANHOLE RING AND COVER HUTTO UTILITY SYSTEMS	UPDATED: 10/10/10	
	DRAWN BY: MSL	
	SCALE: N.T.S.	
	FILE NAME: WW20.DWG	

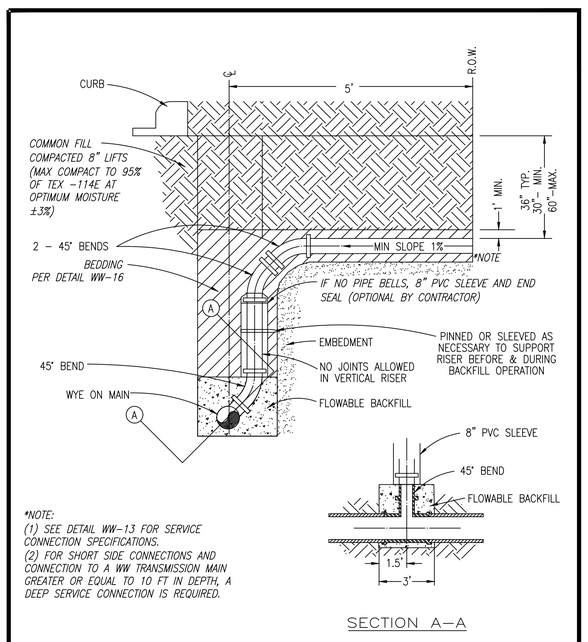

*NOTE:
(1) SEE DETAIL WW-13 FOR SERVICE CONNECTION SPECIFICATIONS.
(2) FOR SHORT SIDE CONNECTIONS AND CONNECTION TO A WW TRANSMISSION MAIN GREATER OR EQUAL TO 10 FT IN DEPTH, A DEEP SERVICE CONNECTION IS REQUIRED.

ISSUE DATE: MAY 2015	CITY OF PFLUGERVILLE	DWG. # WW-19
REVISIONS		WW19.DWG
05/14/15 DF RV	WASTEWATER DEEP SERVICE CONNECTION DETAIL	
DATE APPROVED DRAWN		
SCALE: N.T.S.	CONSTRUCTION STANDARDS AND DETAILS	

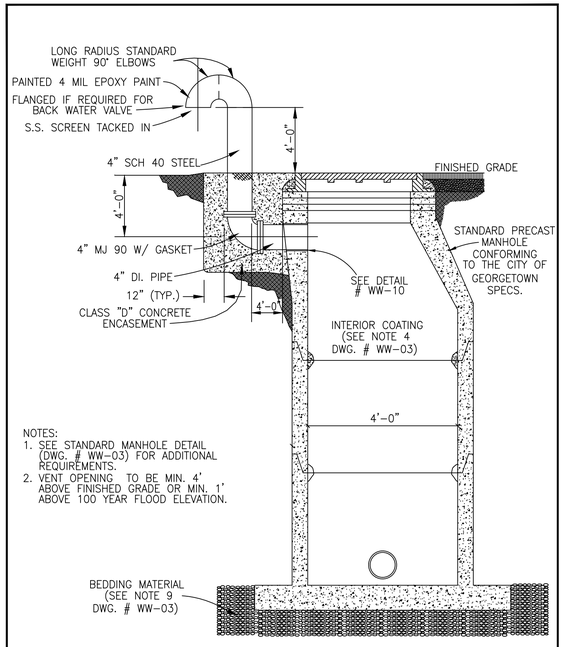

NOTES:
1. SEE STANDARD MANHOLE DETAIL (DWG. # WW-03) FOR ADDITIONAL REQUIREMENTS.
2. VENT OPENING TO BE MIN. 4' ABOVE FINISHED GRADE OR MIN. 1' ABOVE 100 YEAR FLOOD ELEVATION.

The Architect/Engineer assumes responsibility for appropriate use of this standard.

EST. 1866 GEORGETOWN TEXAS Georgetown Utility Systems Your Community Owned Utility	CITY OF GEORGETOWN CONSTRUCTION STANDARDS AND DETAILS TYPICAL MANHOLE WITH VENT	REVISION NOTE: ADOPTED 6/21/2006
		DRAWING NAME: WW19
		SCALE: NTS / DATE: 11/2003
		DRAWN BY: MRS / APPROVED BY: TRB

REV	DESCRIPTION	DATE	APR
	Record Drawing		

DESIGNED BY: DAZ
REVIEWED BY: TMH
DRAWN BY: DAZ

BGE, INC.
1701 DIRECTORS BOULEVARD, SUITE 1000
AUSTIN, TX 78744
TBPE Registration No. F-1046
TEL: 512-879-0400 www.brownjegy.com

WILCO RANCH PHASE 3 SECTION 2
HUTTO, TEXAS

WASTEWATER DETAILS (3 OF 3)

SUBMITTAL DATE: 12-10-2020

STATE OF TEXAS
TIMOTHY M. HOLLAND
94848
LICENSED
PROFESSIONAL ENGINEER
8/3/2021

SHEET
38 OF 44

G:\TXCProjects\Ashton_Woods\80224-00-Wilco_Ranch_Ph3_Sec2\LDV01_CADD\01_Shts\C-SP-DETL-PH 3-SEC 2.dwg Layout: WASTEWATER DETAILS (3 OF 3) Plotted: 8/3/2021 8:43:33 AM

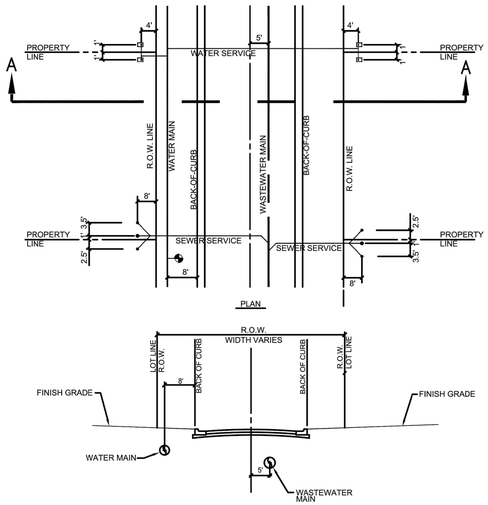

MINIMUM COVER BELOW FINISH-GARDE ALL UTILITIES UNDER ROADWAY 36" MIN.	
WATER	36"
WASTEWATER	48"

MARCH 6, 2017

JONAH WATER SUD
WATER CONSTRUCTION STANDARD DETAILS

UTILITY ASSIGNMENTS FOR LOCAL STREETS, RESIDENTIAL COLLECTORS AND MAJOR COLLECTORS

W01 | N.T.S. | 7-2-13 | M.W.W. | W.E.A.

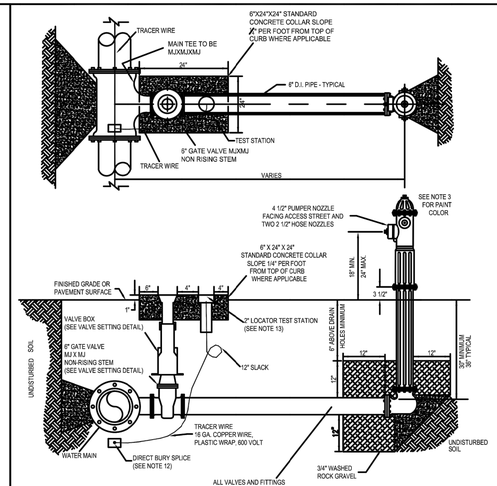

NOTE:
1. FIRE HYDRANT SHALL BE INSTALLED ON SAME SIDE OF ROAD AS WATER MAIN.
2. FIRE HYDRANT SHALL BE INSTALLED PLUMB AND TRUE.
3. ALL FIRE HYDRANT EXTERIORS SHALL BE FACTORY PRIMED AND PAINTED RED USING A HIGH GRADE ENAMEL.
4. HEEL AND THRUST BLOCKS TO REST IN UNDISTURBED SOIL.
5. THE ONLY FIRE HYDRANTS ACCEPTABLE ARE:
   5.1. AMERICAN DARLING - B84B
   5.2. CLOW
   5.3. KENNEDY - K81A
   5.4. EAST JORDAN IRON WORKS - 5CD250 HYDRANT
6. DOUBLE BLUE REFLECTOR "HYE-LITES" BRAND, MANUFACTURED BY PAVEMENT MARKERS INC. TO BE INSTALLED AT 1' OFFSET FROM CENTER OF STREET TOWARDS AND PERPENDICULAR TO HYDRANT.
7. TEST STATION SHALL BE HANDLEY INDUSTRIES INC. - 2 INCH CATHODIC TEST STATIONS OR APPROVED EQUAL.
8. THE 15" ABS PLASTIC BOX SHALL BE A FLANGED TOP FOR INSTALLATION AT GROUND LEVEL.
9. ALL TERMINALS ARE TO BE MADE OF SOLID BRASS.
10. PLASTIC LIDS SHALL BE COLOR BLUE AND MARKED "WATER".
11. TEST TERMINALS ARE TO BE INCORPORATED WITH HANDLEY VALVE BOXES.
12. BURY SPLICE SHALL BE 3M DIRECT BURY SPLICE (DBR) OR APPROVED EQUAL.
13. TEST STATIONS SHALL BE INSTALLED AT EACH FIRE HYDRANT LOCATION, AND LINE GATE VALVES. ONLY ONE TEST STATION IS REQUIRED AT A VALVE CLUSTER OF TWO OR MORE.
14. HYDRANT SHALL BE GREASED WITH FOOD GRADE APPROVED LUBRICANT.
15. WHERE NECESSARY, SWIVEL-LOCK PIPING CAN BE USED BETWEEN TEE AND VALVE, OR VALVE AND HYDRANT.

SEPTEMBER 27, 2017

JONAH WATER SUD
WATER CONSTRUCTION STANDARD DETAILS

TYPICAL FIRE HYDRANT, TRACER WIRE, AND TEST STATION DETAIL

W02 | N.T.S. | 7-2-13 | M.W.W. | W.E.A.

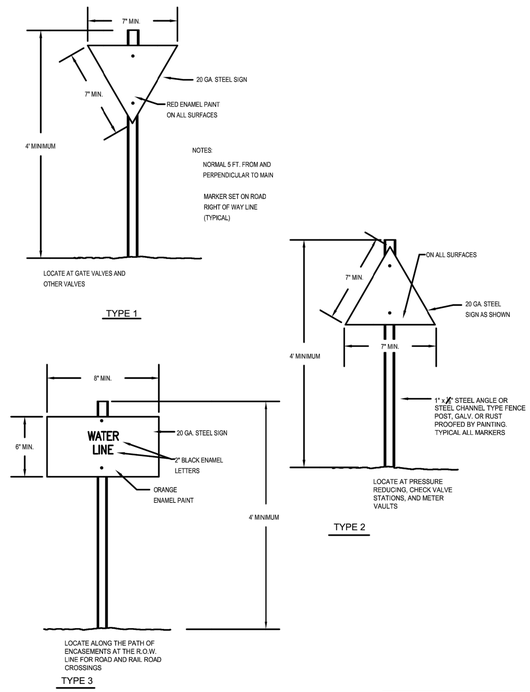

APRIL 3, 2014

JONAH WATER SUD
WATER CONSTRUCTION STANDARD DETAILS

MARKERS: TYPE 1, 2, & 3

W03 | N.T.S. | 7-2-13

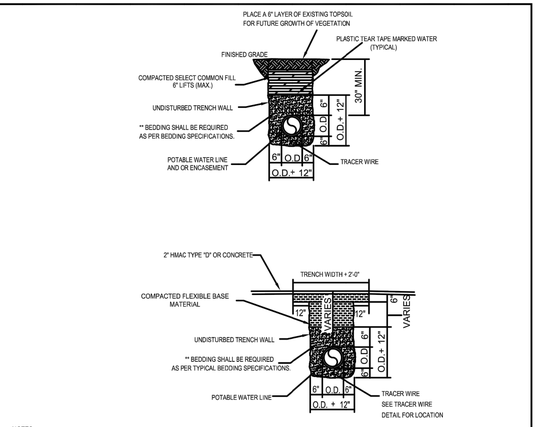

NOTES:
1. REPLACED BASE MATERIAL OVER DITCH SHALL BE TWICE THE THICKNESS OF THE ORIGINAL BASE.
2. FLEXIBLE BASE MATERIAL TYPE II (TYPICAL), SHALL BE PLACED IN MULTIPLE LIFTS NOT TO EXCEED 6". EACH LAYER SHALL BE THOROUGHLY ROLLED OR TAMPED TO SPECIFIED MAXIMUM DENSITY. VERIFY BASE MATERIAL WITH APPLICABLE CITY OR COUNTY SPECIFICATIONS.
3. ASPHALT CONCRETE PAVEMENT JOINTS SHALL BE MECHANICALLY SAWED.
4. SURFACE MATERIAL WILL BE CONSISTENT WITH THE EXISTING SURFACE.
5. DENSITY TESTS SHALL BE TAKEN IN ACCORDANCE WITH APPLICABLE CITY OR COUNTY SPECIFICATIONS.
6. CONTRACTOR OR ENGINEER MAY USE FLOWABLE BACKFILL AS AN ALTERNATE BACKFILL MATERIAL IF PERMITTED BY CITY OR COUNTY (SEE APPLICABLE CITY OR COUNTY FLOWABLE BACKFILL SPECIFICATION).

** TYPICAL BEDDING SPECIFICATIONS:

SIEVE SIZE	3/8" F % RETAINED
1/2"	0
3/8"	0-2
4m	40-85
10m	95-100
3/4"	-

1/2" D % RETAINED	WASHED GRAVEL % RETAINED
0	0
5-25	-
80-100	-
96-100	-
-	100

NOTE:
BURIED PIPING SHALL HAVE THE FOLLOWING LISTED MINIMUM COVER:
12" AND SMALLER - 30" MINIMUM COVER
14" THRU 24" - 54" MINIMUM COVER

MARCH 10, 2014

JONAH WATER SUD
WATER CONSTRUCTION STANDARD DETAILS

TRENCH & EMBEDMENT DETAIL

W04 | N.T.S. | 7-2-13 | M.W.W. | W.E.A.

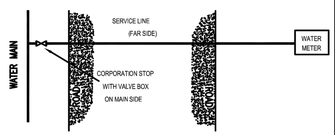

MATERIALS LIST

A. SERVICE CLAMP REQUIRED ON ALL PLASTIC AND ASBESTOS CEMENT PIPE AND ON IRON PIPE UNDER 8".
B. 1" CORPORATION STOP W/ GATE VALVE OPERATING NUT -- SERVICE PIPE OUTLET .
C. 1" SERVICE PIPE
D. ANGLE METER STOP, SERVICE PIPE INLET X SWIVEL COUPLING NUT OUTLET:
   D.A. FOR 5/8" AND 3/4" METERS 1" X 3/4"
   D.B. FOR 1" METERS 1" X 1"
E. DFW PLASTICS, INC METER BOX (DFW37C-12-BODY) WITH DFW PLASTICS, INC. METER LID (REFER TO LID DETAIL W16)
F. 4" SDR-35, PVC PIPE CASING (WHERE APPLICABLE).
G. WATER METER
H. WATER METER COUPLING MALE I.P.T. X SWIVEL COUPLING
   H.A. FOR 5/8" AND 3/4" METERS 3/4" X 8 1/2" LONG.
   H.B. FOR 1" METERS 1" X 8 1/2" LONG

NOTES:
1. SERVICE PIPE SHALL BE COPPER TUBE SIZE. IT MAY BE 150 PSI ANNEALED SEAMLESS TYPE "K" COPPER TUBING OR 200 PSI POLYETHYLENE HAVING A DIMENSION RATIO OF 9 (DR9) STAINLESS STEEL INSERTS SHALL BE USED WITH POLYETHYLENE TUBING.
2. SERVICE SADDLES SHALL BE WRAPPED COMPLETELY WITH 8 MILL POLYETHYLENE FILM.
3. TOP OF BOXES SHALL BE 2" ABOVE FINISHED GRADE.
4. PIPING AND TUBING SHALL BE INSTALLED WITH A 6" SAND BEDDING ENVELOPE.
5. BRASS SHALL ONLY BE FORD.
6. FLARED FITTINGS WILL NOT BE ALLOWED ON COPPER SERVICES.
7. REFERENCE DETAIL W17 FOR VALVE BOX LID

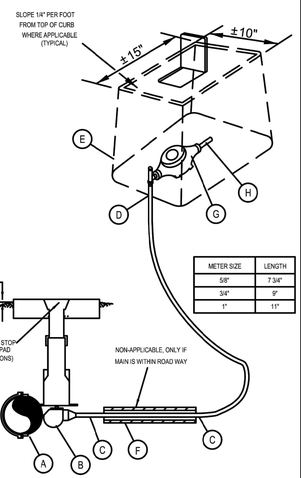

METER SIZE	LENGTH
5/8"	7 3/4"
3/4"	9"
1"	11"

3/17/2020

JONAH WATER SUD
WATER CONSTRUCTION STANDARD DETAILS

STANDARD INSTALLATION DETAIL FOR ONE ¾", ¾", OR 1" METERS

W05 | N.T.S. | 7-2-13 | M.W.W. | W.E.A.

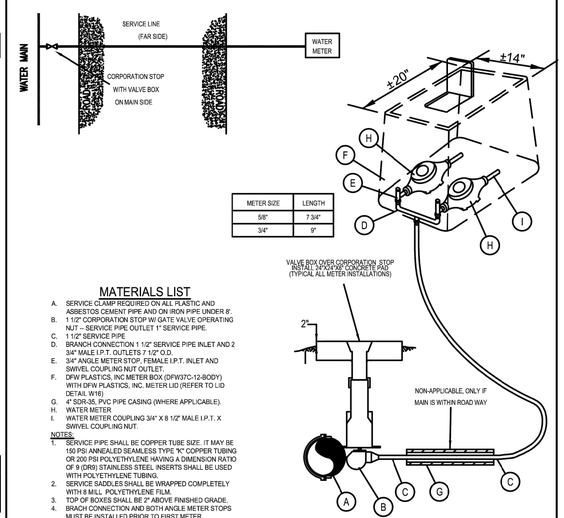

METER SIZE	LENGTH
5/8"	7 3/4"
3/4"	9"

MATERIALS LIST

A. SERVICE CLAMP REQUIRED ON ALL PLASTIC AND ASBESTOS CEMENT PIPE AND ON IRON PIPE UNDER 8".
B. 1 1/2" CORPORATION STOP W/ GATE VALVE OPERATING NUT -- SERVICE PIPE OUTLET 1" SERVICE PIPE.
C. 1 1/2" SERVICE PIPE
D. BRANCH CONNECTION 1 1/2" SERVICE PIPE INLET AND 2 3/4" MALE I.P.T. OUTLETS 7 1/2" O.D.
E. 3/4" ANGLE METER STOP, FEMALE I.P.T. INLET AND SWIVEL COUPLING NUT OUTLET.
F. DFW PLASTICS, INC METER BOX (DFW37C-12-BODY) WITH DFW PLASTICS, INC. METER LID (REFER TO LID DETAIL W16)
G. 4" SDR-35, PVC PIPE CASING (WHERE APPLICABLE).
H. WATER METER
I. WATER METER COUPLING 3/4" X 8 1/2" MALE I.P.T. X SWIVEL COUPLING NUT.

NOTES:
1. SERVICE PIPE SHALL BE COPPER TUBE SIZE. IT MAY BE 150 PSI ANNEALED SEAMLESS TYPE "K" COPPER TUBING OR 200 PSI POLYETHYLENE HAVING A DIMENSION RATIO OF 9 (DR9) STAINLESS STEEL INSERTS SHALL BE USED WITH POLYETHYLENE TUBING.
2. SERVICE SADDLES SHALL BE WRAPPED COMPLETELY WITH 8 MILL POLYETHYLENE FILM.
3. TOP OF BOXES SHALL BE 2" ABOVE FINISHED GRADE.
4. BRACH CONNECTION AND BOTH ANGLE METER STOPS MUST BE INSTALLED PRIOR TO FIRST METER INSTALLATION EVEN THOUGH SECOND PROPERTY MAY NOT BE READY FOR SERVICE.
5. PIPING AND TUBING SHALL BE INSTALLED WITH A 6" SAND BEDDING ENVELOPE.
6. BRASS SHALL ONLY BE FORD.
7. FLARED FITTINGS WILL NOT BE ALLOWED ON COPPER SERVICES.
7. REFERENCE DETAIL W17 FOR VALVE BOX LID

3/17/2020

JONAH WATER SUD
WATER CONSTRUCTION STANDARD DETAILS

STANDARD INSTALLATION DETAIL FOR TWO ¾" OR 1" METERS

W06 | N.T.S. | 7-2-13 | M.W.W. | W.E.A.

NOTES:
1. REPLACED BASE MATERIAL OVER DITCH SHALL BE TWICE THE THICKNESS OF THE ORIGINAL BASE.
2. BASE MATERIAL SHALL BE PLACED IN TWO OR THREE LAYERS AND EACH LAYER THOROUGHLY ROLLED OR TAMPED TO 95% MAXIMUM DENSITY.
3. ASPHALT CONCRETE PAVEMENT JOINTS SHALL BE MECHANICALLY SAWED.
4. SURFACE MATERIAL WILL BE CONSISTENT WITH THE EXISTING SURFACE.
5. A MINIMUM OF TWO DENSITY TESTS SHALL BE TAKEN FOR EACH SIX (6) INCH LIFT OF SUBGRADE AND EACH OPEN CUT CROSSING WHEN THE SPECIFIED COMPACTED BASE IS GREATER THAN SIX AND ONE-HALF (6 1/2") INCHES THE BASE SHALL BE CONSTRUCTED IN TWO OR MORE COURSES. PROCTORS FOR MATERIALS USED IN BACKFILLING SHALL BE OBTAINED BY A CERTIFIED LABORATORY. DENSITY TEST SHALL BE CONDUCTED BY A CERTIFIED LABORATORY OF THE PERMITTEE'S CONSULTANTS. THE PERCENTAGE OF MAXIMUM DENSITY REQUIRED SHALL BE IN ACCORDANCE WITH THE LATEST EDITION OF "TxDOT STANDARD SPECIFICATIONS FOR ROAD AND BRIDGE CONSTRUCTION" AT THE TIME THE PERMIT WAS ISSUED. ALL DENSITY TESTS SHALL BE COMPLETED AND ACCEPTED DENSITY TESTS SHALL BE FURNISHED TO JWSUD. BACKFILL COMPACTION SHALL BE A MINIMUM OF 95% MAXIMUM DENSITY PER AASHTO T-180 SPECIFICATIONS.
6. THESE SPECIFICATIONS MAY BE SUPERSEDED BY THE GOVERNING AGENCY.
7. SELECT MATERIAL TYPE II:
   7.1. TxDOT TYPE A - GRADE 2 OR BETTER CRUSHED LIMESTONE BASE COMPACTED TO 98% OF ASTM D-698 AT OPTIMUM MOISTURE. PROCTOR TO BE PROVIDED BY THE CONTRACTOR TO THE S.U.D. INSPECTOR.

NOTES:
A. VALVE BOX SHALL BE EAST JORDAN IRON WORKS SERIES 8550 TWO PIECE SCREW TYPE OR APPROVED EQUAL HAVING AN ADJUSTABLE RANGE OF +/- 6 INCHES FROM INSTALLED FINISH GRADE.
B. 2. ACCEPTABLE GATE VALVES ARE:
   B.1. AMERICAN FLOW CONTROL - SERIES 2500
   B.2. MUELLER - 2360 SERIES
   B.3. EAST JORDAN IRONWORKS
   B.4. CLOW
C. FOR IN LINE VALVES, USE MECHANICAL JOINT WITH "MEGALUG" RESTRAINTS (OR APPROVED EQUAL) ON EACH SIDE OF VALVE.
D. IF THE TOP OF THE VALVE OPERATING NUT IS MORE THAN 3 FT. BELOW THE FINISHED SURFACE, A OPERATING STEM EXTENSION SHALL BE INSTALLED TO BRING THE OPERATING NUT TO WITHIN 3 FT. OF THE FINISHED SURFACE.
E. VALVE OPERATING NUTS MORE THAN 3 FT. BELOW THE GROUND SURFACE ELEVATION SHALL BE EXTENDED TO BE 2 FT. BELOW GROUND.
F. REFER TO DETAIL W02 FOR TEST STATION REQUIREMENTS.
G. REFER TO DETAIL W09 FOR THRUST BLOCKING AND JOINT RESTRAINT REQUIREMENTS.

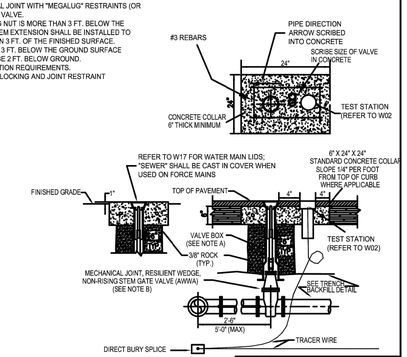

9/28/2018

JONAH WATER SUD
WATER CONSTRUCTION STANDARD DETAILS

TYPICAL VALVE SETTING

W07 | N.T.S. | 7-2-13 | M.W.W. | W.E.A.

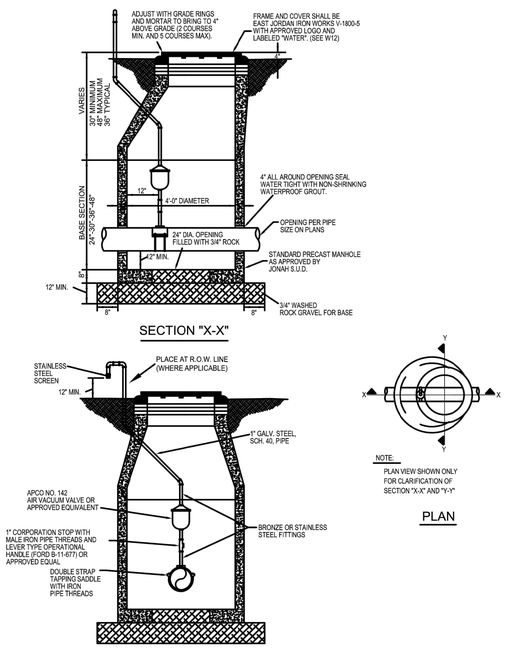

3/8/18

JONAH WATER SUD
WATER CONSTRUCTION STANDARD DETAILS

STANDARD AIR RELEASE VALVE FOR WATER MAIN DETAIL

W08 | N.T.S. | 7-2-13 | M.W.W. | W.E.A.

REV	DESCRIPTION	DATE	APR
	Record Drawing		

DESIGNED BY: DAZ
REVIEWED BY: TMH
DRAWN BY: DAZ

BGE, INC.
1701 DIRECTORS BOULEVARD, SUITE 1000
AUSTIN, TX 78744
TBPE Registration No. F-1046
TEL: 512-879-0400 www.brownbgy.com

WILCO RANCH PHASE 3 SECTION 2
HUTTO, TEXAS

WATER DETAILS (1 OF 3)

SUBMITTAL DATE: 12-10-2020

STATE OF TEXAS
TIMOTHY M. HOLLAND
94848
LICENSED PROFESSIONAL ENGINEER
12/9/2021

SHEET
39 OF 44

G:\TXO\Projects\Ashton_Woods\8022-00-Wilco_Ranch_Ph3_Sec2\LD\01_CADD\01_Shts\C-SP-DETL_PH 3-SEC 2.dwg Layout: WATER DETAILS (1 OF 3) Plotted: 8/3/2021 8:43:48 AM

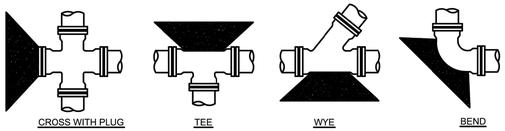

ALL THRUST BLOCKING SHALL BE FORMED. LAID FORMS SHALL BE INSPECTED BY JWSUD PRIOR TO THE POURING OF CONCRETE AND SHALL ALSO BE INSPECTED BY JWSUD PRIOR TO COVERING. TYPICAL LOCATIONS WHICH REQUIRE CONCRETE REACTION (THRUST) BLOCKS, FOR PRESSURE MAINS TWO INCHES (2") AND GREATER. CONCRETE SHALL HAVE 2500 P.S.I. MINIMUM STRENGTH AT TWENTY EIGHT (28) DAYS AND BEAR AGAINST UNDISTURBED STABLE SOILS, AREA OF CONTACT SHALL BE GOVERNED BY PIPE SIZE, MAXIMUM PRESSURE IN PIPE AND BEARING CAPACITY OF SOIL. PROTECT FITTINGS, BOLTS, ETC. BY COVERING WITH VISQUEEN OR OTHER ACCEPTABLE MATERIAL CONCRETE SHALL BE A MINIMUM OF TWELVE INCHES (12") THICK.

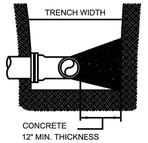

TYPICAL SECTION

#5 REBAR MIN. 2 REQUIRED BENT TO FIT AND PAINT WITH 2 COATS OF BITUMINISTIC PAINT BEFORE ASSEMBLY

*DEADMAN

PIPE SIZE	THRUST BLOCK AREA REQUIRED	PIPE SIZE	THRUST BLOCK AREA REQUIRED	REMARKS
4"	2.0 SQ. FT.	18"	30.0 SQ. FT.	VALUES ARE FOR 90 BENDS, BASED ON 2000 P.S.F. SAFE BEARING LOAD AND PIPE PRESSURE OF 150 P.S.I. PLUS 33% SAFETY FACTOR FOR OTHER SOILS AND PRESSURES, THE AREA REQUIRED IS IN DIRECT PROPORTION. *
6"	4.0 SQ. FT.	20"	37.0 SQ. FT.	
8"	6.6 SQ. FT.	24"	53.0 SQ. FT.	
10"	10.0 SQ. FT.	27"	80.0 SQ. FT.	
12"	14.0 SQ. FT.	30"	98.0 SQ. FT.	
14"	18.0 SQ. FT.	36"	127.0 SQ. FT.	
16"	24.0 SQ. FT.			

*THE ENGINEER OF RECORD SHALL CALCULATE THE SIZE OF THE DEADMAN REQUIRED AS WELL AS ANY INSTALLATION WHICH IS NOT COVERED BY THE ABOVE.

NOTE:

- ALL 3" AND LARGER ELLS, TEES AND BENDS SHALL BE MJ DUCTILE IRON FITTINGS WITH "MEGALUG" OR APPROVED EQUAL. JOINT RESTRAINTS - CONCRETE THRUST BLOCKING AS SHOWN IN THE ABOVE TABLE SHALL BE INSTALLED. JOINT RESTRAINTS SHALL ALSO BE USED FOR ANY PIPE LENGTH LESS THAN ONE FULL PIPE JOINT AWAY FROM EACH M.J. FITTING.
- ALL 2-1/2" AND SMALLER CAPS, ELLS, TEES AND 45° BENDS SHALL BE HARCO PUSH-ON DUCTILE IRON FITTINGS WITH KNUCKLE JOINT RESTRAINT OR APPROVED EQUAL - CONCRETE THRUST BLOCKING AS SHOWN IN THE ABOVE TABLE SHALL BE INSTALLED.
- OTHER THRUST BLOCKING DIMENSIONS ACCEPTED IF DESIGNED BY LICENSED ENGINEER.

JONAH WATER SUD
WATER CONSTRUCTION STANDARD DETAILS
TYPICAL THRUST BLOCKS FOR WATER AND FORCE MAINS DETAIL
REVISED DATE JANUARY 13, 2017 | STANDARD DWG W09 | SCALE N.T.S. | DATE 7-2-13 | DRAWN BY M.W.W. | APPROVED BY W.E.A.

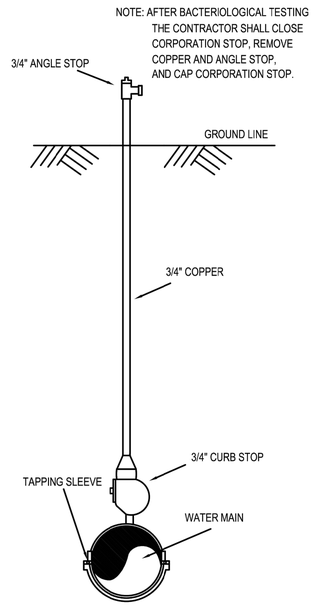

JONAH WATER SUD
WATER CONSTRUCTION STANDARD DETAILS
TEMPORARY SAMPLING TEST STATION
STANDARD DWG W10 | SCALE N.T.S. | DATE 7-2-13 | DRAWN BY M.W.W. | APPROVED BY W.E.A.

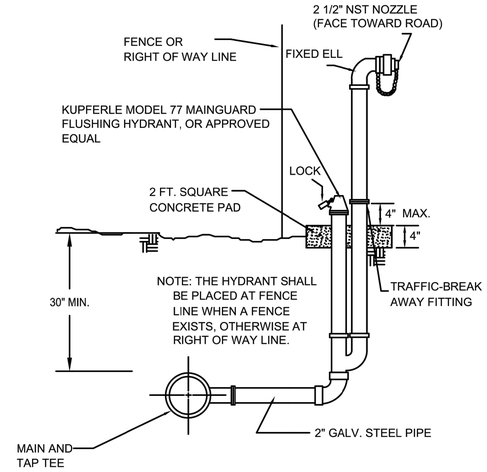

JONAH WATER SUD
WATER CONSTRUCTION STANDARD DETAILS
FIRE TYPE BLOW OFF HYDRANT
STANDARD DWG W11 | SCALE N.T.S. | DATE 7-2-13 | DRAWN BY M.W.W. | APPROVED BY W.E.A.

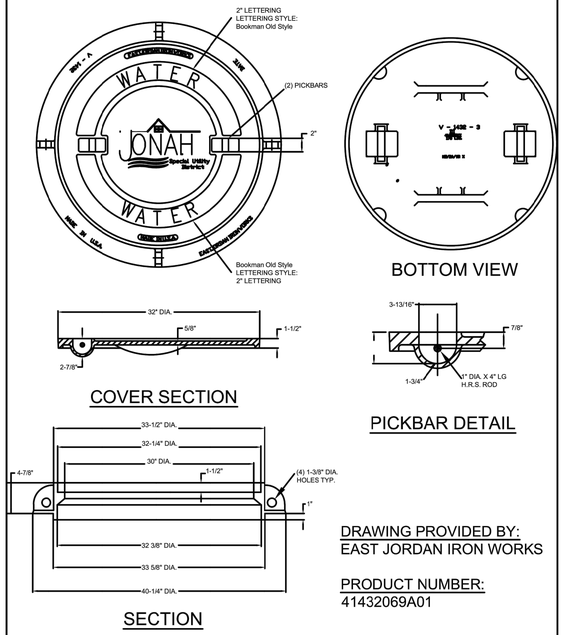

DRAWING PROVIDED BY:
EAST JORDAN IRON WORKS

PRODUCT NUMBER:
41432069A01

JONAH WATER SUD
WATER CONSTRUCTION STANDARD DETAILS
WATER MANHOLE LID
STANDARD DWG 9/28/2018 | SCALE N.T.S. | DATE 7-2-13 | DRAWN BY M.W.W. | APPROVED BY W.E.A.

EQUIPMENT

PRESSURE REDUCING VALVE STATION

- (A) CLA-VAL (TYPE 90-48 OR AS SPECIFIED) PRESSURE REDUCING VALVE OR EQUAL. SHALL INCLUDE STAINLESS STEEL PILOT TUBING. SEE DISTRIBUTION SYSTEM PLANS FOR SIZE AND LOCATION.
- (B) GATE VALVE AND BOX;SAME SIZE AS MAIN. (REFER TO W07)
- (C) PENN TYPE WS 1 PRESSURE GAUGE, OR EQUAL WITH CUT OFF AND ELL. (FACE GAUGE UP.)
- (D) BADGER PLATE STRAINER OR APPROVED EQUAL ON UP STREAM SIDE - SAME SIZE AS PRESSURE REDUCING VALVE
- (E) REDUCER

CHECK VALVE STATION:

- (A) CHECK VALVE AS SPECIFIED. SEE DISTRIBUTION SYSTEM PLANS FOR SIZE AND LOCATION.
- (B) GATE VALVE AND BOX; SAME SIZE AS MAIN. (REFER TO W07)

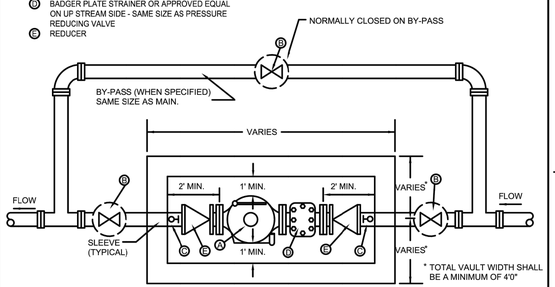

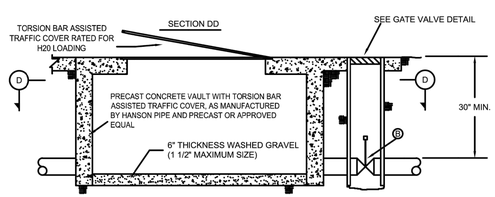

ELEVATION

NOTE: ALL PIPE, VALVES, FITTINGS AND EQUIPMENT SHALL CONFORM TO THE CURRENT APPLICABLE A.W.W.A. STANDARDS.

NOTE: BID PRICE FOR CHECK VALVE STATION, AND PRESSURE REDUCING STATION SHALL INCLUDE VALVE, GATE VALVES WITH BOX, PIPING, AND VAULT. (INCLUDING BY-PASS WHERE REQUIRED)

JONAH WATER SUD
WATER CONSTRUCTION STANDARD DETAILS
PRESSURE REDUCING AND/OR CHECK VALVE STATION
REVISED DATE May 29, 2019 | STANDARD DWG W13 | SCALE N.T.S. | DATE 7-2-13 | DRAWN BY M.W.W. | APPROVED BY W.E.A.

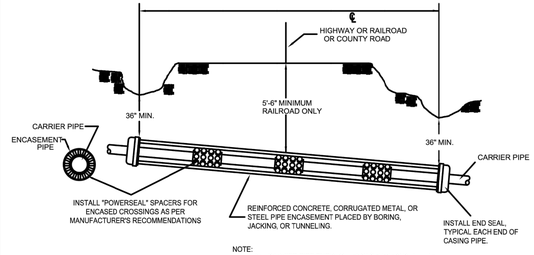

NOTE:
ALL CARRIER PIPE THROUGH ENCASEMENTS SHALL BE RESTRAINED JOINT TYPE OR FUSIBLE ENDS TYPE PIPE AND SHALL BE INCLUDED IN THE PRICE OF THE CROSSING.

COUNTY ROAD, HIGHWAY AND RAILROAD CROSSINGS

STEEL ENCASEMENT WALL THICKNESS CHART FOR SMOOTH STEEL CASING PIPE WITH A MINIMUM YIELD STRENGTH OF 35,000 PSI.		
MINIMUM THICKNESS		DIAMETER OF CASING PIPE.
0'-0.2500"	0'-0 1/4"	12" OR LESS
0'-0.3125"	0'-0 5/16"	OVER 12" TO 18"
0'-0.3750"	0'-0 3/8"	OVER 18" TO 22"
0'-0.4375"	0'-0 7/16"	OVER 22" TO 28"
0'-0.5000"	0'-0 1/2"	OVER 28" TO 34"
0'-0.5625"	0'-0 9/16"	OVER 34" TO 42"
0'-0.6250"	0'-0 5/8"	OVER 42" TO 48"

NOTE:

1. ALL CARRIER PIPING SHALL BE RESTRAINED JOINT TYPE OR BUTT-FUSIBLE TYPE OF THE SAME SIZE AND THE SAME PRESSURE CLASS AT MINIMUM OF THE APPLICABLE PIPELINE.
2. OPEN CUT ENCASEMENT PIPE SHALL HAVE THE SAME TRENCH AND EMBEDMENT DETAILS AS AS SHOWN FOR PIPELINES.
3. DO NOT USE WEDGES BETWEEN TOP OF CARRIER PIPE AND INSIDE OF CASING TO KEEP THE CARRIER PIPE FROM MOVING.
4. PRIOR TO INSERTING CARRIER PIPE, ANY WATER SHOULD BE PUMPED OUT OF THE CASING PIPE SO THAT NO MORE THAN A FEW INCHES OF WATER REMAINS.
5. SPACERS SHALL BE REQUIRED WITHIN AT LEAST 3 FEET FROM BOTH ENDS OF THE ENCASEMENT PIPE.
6. ENCASEMENT PIPE SHALL BE SMOOTH STEEL, 35,000 PSI YIELD STRENGTH WITH WALL THICKNESS ACCORDING TO THE WALL THICKNESS CHART.
7. THE RESTRAINED JOINT CARRIER PIPE SHALL EXTEND A MINIMUM OF 10 L.F. PAST BOTH ENDS OF THE ENCASEMENT PIPING BEFORE TRANSITIONING BACK TO NON-JOINT RESTRAINED PIPING.

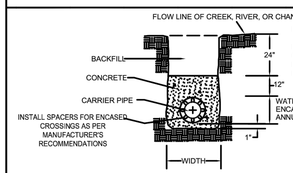

NOTE:
WHERE FITTINGS ARE TO BE USED TO ADJUST PIPE ELEVATIONS TO BELOW BOTTOM OF CREEK, THE CONTRACTOR SHALL OBTAIN APPROVAL OF CONCRETE UP-THRUST AND DOWN-THRUST BLOCKING FROM THE ENGINEER PRIOR TO CONSTRUCTION AND SHALL INSTALL JOINT RESTRAINTS INBETWEEN FITTINGS IF APPROVED TO DO SO.

WATER TIGHT P.V.C. OR METAL ENCASEMENT PIPE WITH 1" ANNULAR CLEARANCE.

CONCRETE ENCASED CREEK CROSSING

JONAH WATER SUD
WATER CONSTRUCTION STANDARD DETAILS
INSTALLATION OF PIPE THROUGH CASING/CREEK CROSSING
STANDARD DWG W14 | SCALE N.T.S. | DATE 7-2-13 | DRAWN BY M.W.W. | APPROVED BY W.E.A.

WATER MAINS AND SANITARY SEWERS SHALL BE INSTALLED NO CLOSER TO EACH OTHER THAN 9 FT. IN ALL DIRECTIONS AND PARALLEL LINES MUST BE INSTALLED IN SEPARATE TRENCHES. WHERE THE 9 FT. SEPARATION CANNOT BE ACHIEVED, THE FOLLOWING TABLE SHALL GOVERN:

CONDITION	LOCATION	MATERIAL: WATER	MATERIAL: SEWER	MINIMUM SEPARATION: VERT.	MINIMUM SEPARATION: HORIZ.	COMMENTS
NEW WATER AND NEW SEWER						
SEWER FORCE MAIN AND GRAVITY SANITARY SEWER PARALLEL TO WATER MAIN	WATER ABOVE SEWER	STD.	C.I., D.I., P.V.C., 150 P.S.I.	2'	4'	SEPARATE TRENCHES
GRAVITY SANITARY SEWER CROSSING WATER MAIN	WATER ABOVE SEWER OR SEWER ABOVE WATER	STD.	C.I., D.I., P.V.C., 150 P.S.I.	6"	NA	CENTER ONE JOINT OF SEWER PIPE ON WATER MAIN
GRAVITY SANITARY SEWER CROSSING WATER MAIN	WATER ABOVE SEWER	STD.	ABS., CLAY CONCRETE COMPOSITE	2'	NA	CEMENT STABILIZE SAND BACKFILL INITIAL BACKFILL ZONE OF SEWER FOR 9 FT. EACH SIDE OF CROSSING. CENTER ONE JOINT OF SEWER PIPE ON WATER MAIN.
NEW WATER AND EXISTING SANITARY SEWER						
NEW WATER PARALLEL TO EXISTING SEWER	WATER ABOVE SEWER	STD.	CLAY, CONC., ABS., C.I., D.I., P.V.C.	2'	4'	IF SEWER SHOWS NO SIGN OF LEAKAGE, THEN LEAVE SEWER ALONE. IF SEWER SHOWS SIGNS OF LEAKAGE, THEN REPAIR OR REPLACE.
NEW WATER CROSSING EXISTING SEWER	WATER ABOVE SEWER	STD.	ABS., CLAY., CONCRETE COMPOSITE	2'	NA	IF SEWER SHOWS NO SIGN OF LEAKAGE, THEN LEAVE SEWER ALONE. IF SEWER SHOWS SIGNS OF LEAKAGE, THEN REPAIR OR REPLACE.
NEW WATER CROSSING EXISTING SEWER	SEWER ABOVE WATER	STD.	ABS., CLAY., CONCRETE COMPOSITE	2'	NA	REPLACE EXISTING SEWER WITH ONE JOINT C.I., D.I., P.V.C. - 150 P.S.I., CENTERING OVER WATER LINE.
NEW WATER PARALLEL TO EXISTING SEWER	SEWER ABOVE WATER	STD.	ABS., CLAY., CONCRETE COMPOSITE	2'	4'	REPLACE EXISTING SEWER WITH C.I., D.I., P.V.C.-150 P.S.I. OR CEMENT STABILIZED SAND BACK FILL IN INITIAL BACKFIELD ZONE OF SEWER WHERE PARALLEL CLOSER THAN 9 FT. OR ENCASE THE WATER IN 150 P.S.I. PIPE TWO NOMINAL SIZES LARGER.
EXISTING WATER AND NEW SANITARY SEWER						
NEW SEWER PARALLEL TO EXISTING WATER	WATER ABOVE SEWER OR SEWER ABOVE WATER	STD.	C.I., D.I., P.V.C., 150 P.S.I.	2'	4'	SEPARATE TRENCHES
NEW SEWER CROSSING EXISTING WATER	WATER ABOVE SEWER OR SEWER ABOVE WATER	STD.	C.I., D.I., P.V.C., 150 P.S.I.	6"	NA	CENTER ONE JOINT OF SEWER PIPE ON WATER MAIN
NEW SEWER CROSSING EXISTING WATER	WATER ABOVE SEWER	STD.	ABS., CLAY., CONCRETE COMPOSITE	2'	NA	CEMENT STABILIZE SAND BACKFIELD INITIAL ZONE OF SEWER FOR 9 FT. EACH SIDE OF CROSSING. CENTER ONE JOINT OF SEWER PIPE ON WATER MAIN.

FIRE HYDRANTS SHALL NOT BE LOCATED WITHIN 9 FT. VERTICALLY OR HORIZONTALLY OF ANY SANITARY SEWER, REGARDLESS OF CONSTRUCTION.
WATER MAINS SHALL NOT BE INSTALLED CLOSER THAN 10 FT. TO SEPTIC TANK DRAINFIELDS.

JONAH WATER SUD
WATER CONSTRUCTION STANDARD DETAILS
TABLE FOR SEPARATION OF WATER AND SEWER PIPE LINES
STANDARD DWG W15 | SCALE N.T.S. | DATE 7-2-13 | DRAWN BY M.W.W. | APPROVED BY W.E.A.

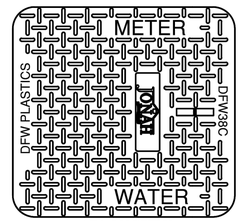

PLAN VIEW

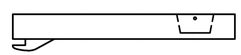

COVER SECTION

METER LID DETAIL FOR DUAL 5/8", 3/4", OR 1" METERS

DRAWING PROVIDED BY:
DFW PLASTICS, INC.
PRODUCT NUMBER:
DFW38C-14-AF3P JSUD

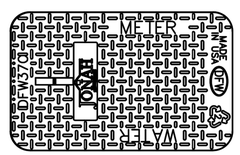

PLAN VIEW

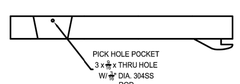

COVER SECTION

METER LID DETAIL FOR ONE 5/8", 3/4", OR 1" METER

DRAWING PROVIDED BY:
DFW PLASTICS, INC.
PRODUCT NUMBER:
DFW37C-12-AF3P JSUD

JONAH WATER SUD
WATER CONSTRUCTION STANDARD DETAILS
METER LID DETAILS
STANDARD DWG 9/25/19 | SCALE N.T.S. | DATE 7-2-13 | DRAWN BY M.W.W. | APPROVED BY W.E.A.

REV	DESCRIPTION	DATE	APR
	Record Drawing		

DESIGNED BY: DAZ
REVIEWED BY: TMH
DRAWN BY: DAZ

BGE, INC.
1701 DIRECTORS BOULEVARD, SUITE 1000
AUSTIN, TX 78744
TBPE Registration No. F-1046
TEL: 512-879-0400 www.browngay.com

WILCO RANCH PHASE 3 SECTION 2
HUTTO, TEXAS

WATER DETAILS (2 OF 3)

SUBMITTAL DATE: 12-10-2020

TIMOTHY M. HOLLAND 94848 LICENSED PROFESSIONAL ENGINEER 9/9/2021

SHEET
40 OF 44

G:\TXC\Projects\Ashton_Woods\8022-00-Wilco_Ranch_Ph3_Sec2\LD\01_CADD\01_Shts\C-SP-DETL-PH 3-SEC 2.dwg Layout: WATER DETAILS (2 OF 3) Plotted: 8/3/2021 8:43:59 AM

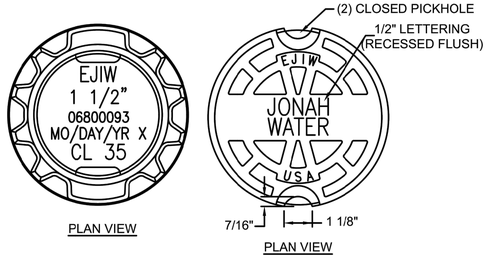

PLAN VIEW

PLAN VIEW

DRAWING PROVIDED BY:
EAST JORDAN IRON WORKS

PRODUCT NUMBER:
06800093

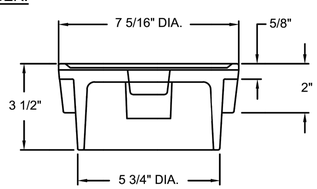

SECTION VIEW

JONAH SUD | JONAH WATER SUD WATER CONSTRUCTION STANDARD DETAILS | VALVE BOX LID | REVISED DATE 9/28/2018 | STANDARD DETAIL W17 | SCALE N.T.S. | DATE 7-2-13 | DRAWN BY M.W.W. | APPROVED BY W.E.A.

Hydrostatic Testing

Hydrostatic testing described in this section shall be conducted with water.

General

The contractor shall provide measurement gauge, pump, pipe, connection, and other necessary apparatuses, unless otherwise specified. Prior to testing the contractor shall place sufficient backfill to prevent pipe movement. The contractor shall ensure that thrust-blocking or other types of restraint systems will provide adequate restraint prior to pressurizing the pipeline.

Test Duration

The duration of the hydrostatic test shall be 2 hours.

Test Pressure

The hydrostatic test pressure shall not be less than 1.25 times the maximum anticipated sustained working pressure at the highest point along the test section unless the pressure exceeds the design pressure limit for any pipe, thrust restraint, valve, fitting or other appurtenance of the test section. In no case shall the test pressure exceed the design pressure limit for any pipe, thrust restraint, valve, fittings, or other appurtenance of the test section.

Test Allowance

The testing allowance shall be defined as the quantity of water that must be supplied to the pipe section being tested to maintain the pressure within 5 psi of the specified hydrostatic test pressure. The installation will not be accepted, by the owner, if the quantity of the makeup water is greater than that determined by the formula below. All visible leaks are to be repair regardless of the amount of leakage.

$$Q = \frac{L \times D \times \sqrt{P}}{148000}$$

Q = quantity of makeup water in gallons per hour (gal./hr.)
L = length of pipe being tested in feet (ft.)
D = nominal diameter of pipe in inches (in.)
P = average test pressure during the hydrostatic test in pounds per square inch (psi)

Disinfection (Does Not Apply To Sewer Force Mains.)

New mains shall be thoroughly disinfected in accordance with AWWA Standard C651 and then flushed and sampled before being placed in service. Samples shall be collected for microbiological analysis to check the effectiveness of the disinfection procedure. Sampling shall be repeated if contamination persists. A minimum of one sample for each 1,000 feet of completed waterline will be required or at the next available sampling point beyond 1,000 feet as designated by the design engineer.

JONAH SUD | JONAH WATER SUD WATER CONSTRUCTION STANDARD DETAILS | TESTING REQUIREMENTS FOR PRESSURIZED PIPELINES (POTABLE WATERLINES AND SEWER FORCEMAINS) | STANDARD DETAIL W18 | SCALE N.T.S. | DATE 7-2-13 | DRAWN BY M.W.W. | APPROVED BY W.E.A.

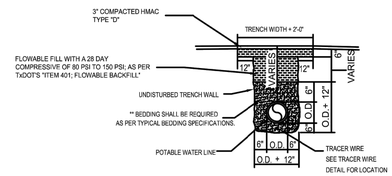

NOTES:
1. FLOWABLE FILL SHALL BE IN ACCORDANCE TO TxDOT'S ITEM 401 "FLOWABLE BACKFILL" SPECIFICATIONS. AS FOUND AT " http://ftp.dot.state.tx.us/pub/txdot-info/des/specs/specbook.pdf "
2. ASPHALT CONCRETE PAVEMENT JOINTS SHALL BE MECHANICALLY SAWED.
3. SURFACE MATERIAL WILL BE CONSISTENT WITH THE EXISTING SURFACE.
4. DENSITY TESTS SHALL BE TAKEN IN ACCORDANCE WITH APPLICABLE STATE, COUNTY, OR CITY SPECIFICATIONS.

** TYPICAL BEDDING SPECIFICATIONS:

SIEVE SIZE	3/8" F % RETAINED
1/2"	0
3/8"	0-2
4m	40-85
10m	95-100
3/4"	-

1/2" D % RETAINED	WASHED GRAVEL % RETAINED
0	0
5-25	-
80-100	-
96-100	-
-	100

NOTE:
BURIED PIPING SHALL HAVE THE FOLLOWING LISTED MINIMUM COVER:

12" AND SMALLER - 30" MINIMUM COVER
14" THRU 24" - 54" MINIMUM COVER

JONAH SUD | JONAH WATER SUD WATER CONSTRUCTION STANDARD DETAILS | TRENCH & EMBEDMENT DETAIL FLOWABLE FILL | STANDARD DETAIL W19 | SCALE N.T.S. | DATE 7-11-16 | DRAWN BY M.W.W. | APPROVED BY M.W.W.

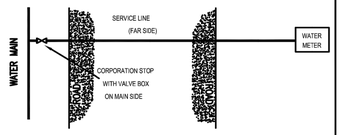

MATERIALS LIST

A. SERVICE CLAMP REQUIRED ON ALL PLASTIC AND ASBESTOS CEMENT PIPE AND ON IRON PIPE UNDER 8'.
B. 2" CORPORATION STOP W/ GATE VALVE OPERATING NUT – SERVICE PIPE OUTLET.
C. 2" SERVICE PIPE.
D. FLANGED ANGLE METER STOP, FORD BRASS, 1.5" MODEL # FV43-666WG-NL; 2" MODEL # FV43-777WG-NL
E. DFW: MODEL DFW38C-14-BODY RECTANGULAR METER BOX WITH DFW PLASTICS, INC. METER LID (REFER TO LID DETAIL W16)
F. 4" SDR-35, PVC PIPE CASING (WHERE APPLICABLE).
G. WATER METER; SUPPLIED BY JONAH WATER
H. WATER METER COUPLING MALE I.P.T. X SWIVEL COUPLING

NOTES:
1. SERVICE PIPE SHALL BE COPPER TUBE SIZE. IT MAY BE 150 PSI ANNEALED SEAMLESS TYPE "K" COPPER TUBING OR 200 PSI POLYETHYLENE HAVING A DIMENSION RATIO OF 9 (DR9) STAINLESS STEEL INSERTS SHALL BE USED WITH POLYETHYLENE TUBING.
2. SERVICE SADDLES SHALL BE WRAPPED COMPLETELY WITH 8 MILL POLYETHYLENE FILM.
3. TOP OF BOXES SHALL BE 2" ABOVE FINISHED GRADE.
4. PIPING AND TUBING SHALL BE INSTALLED WITH A 6" SAND BEDDING ENVELOPE.
5. BRASS SHALL ONLY BE FORD.
6. FLARED FITTINGS WILL NOT BE ALLOWED ON COPPER SERVICES.
7. REFERENCE DETAIL W17 FOR VALVE BOX LID

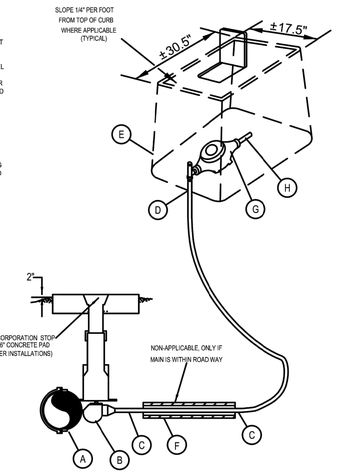

JONAH SUD | JONAH WATER SUD WATER CONSTRUCTION STANDARD DETAILS | STANDARD DETAIL W20 | SCALE N.T.S. | DATE 4-20-17 | DRAWN BY M.W.W. | APPROVED BY M.W.W.

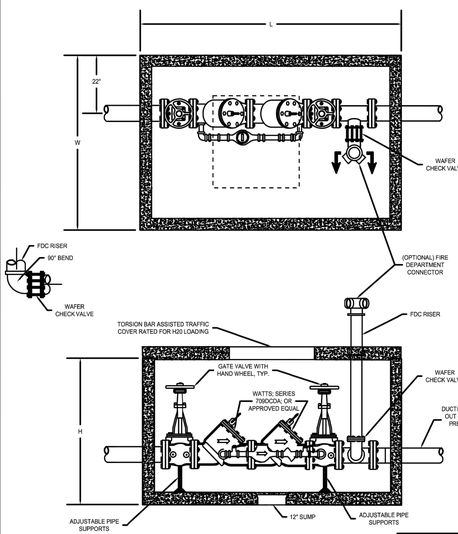

MINIMUM VAULT DIMENSIONS			
VALVE SIZE (INCHES)	"W"	"L"	"H"
4	5'-0"	9'-0"	5'-6"
6	5'-0"	9'-0"	5'-6"
8	5'-0"	9'-0"	6'-6"
10	5'-0"	9'-0"	7'-0"

JONAH SUD | JONAH WATER SUD WATER CONSTRUCTION STANDARD DETAILS | STANDARD DOUBLE DETECTOR CHECK BACKFLOW PREVENTER | STANDARD DETAIL W21 | SCALE N.T.S. | DATE 11-28-17 | DRAWN BY M.W.W. | APPROVED BY M.W.W.

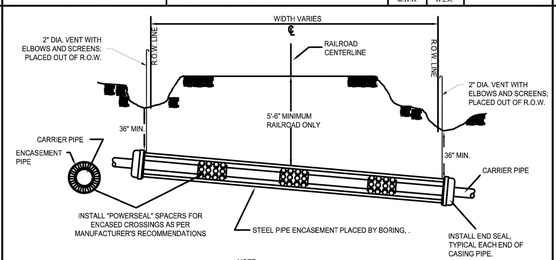

NOTE:
ALL CARRIER PIPE THROUGH ENCASEMENTS SHALL BE RESTRAINED JOINT TYPE OR FUSIBLE ENDS TYPE PIPE AND SHALL BE INCLUDED IN THE PRICE OF THE CROSSING.

STEEL ENCASEMENT WALL THICKNESS CHART' FOR SMOOTH STEEL CASING PIPE WITH A MINIMUM YIELD STRENGTH OF 35,000 PSI.		
MINIMUM THICKNESS		DIAMETER OF CASING PIPE.
0'-0.2500"	0'-0 1/4"	12" OR LESS
0'-0.3125"	0'-0 5/16"	OVER 12" TO 18"
0'-0.3750"	0'-0 3/8"	OVER 18" TO 22"
0'-0.4375"	0'-0 7/16"	OVER 22" TO 28"
0'-0.5000"	0'-0 1/2"	OVER 28" TO 34"
0'-0.5625"	0'-0 9/16"	OVER 34" TO 42"
0'-0.6250"	0'-0 5/8"	OVER 42" TO 48"

NOTE:
1. ALL CARRIER PIPING SHALL BE RESTRAINED JOINT TYPE OR BUTT-FUSIBLE TYPE OF THE SAME SIZE AND THE SAME PRESSURE CLASS AT MINIMUM OF THE APPLICABLE PIPELINE.
2. OPEN CUT ENCASEMENT PIPE SHALL HAVE THE SAME TRENCH AND EMBEDMENT DETAILS AS AS SHOWN FOR PIPELINES.
3. DO NOT USE WEDGES BETWEEN TOP OF CARRIER PIPE AND INSIDE OF CASING TO KEEP THE CARRIER PIPE FROM MOVING.
4. PRIOR TO INSERTING CARRIER PIPE, ANY WATER SHOULD BE PUMPED OUT OF THE CASING PIPE SO THAT NO MORE THAN A FEW INCHES OF WATER REMAINS.
5. SPACERS SHALL BE REQUIRED WITHIN AT LEAST 3 FEET FROM BOTH ENDS OF THE ENCASEMENT PIPE.
6. ENCASEMENT PIPE SHALL BE SMOOTH STEEL, 35,000 PSI YIELD STRENGTH WITH WALL THICKNESS ACCORDING TO THE WALL THICKNESS CHART.
7. THE RESTRAINED JOINT CARRIER PIPE SHALL EXTEND A MINIMUM OF 10 L.F. PAST BOTH ENDS OF THE ENCASEMENT PIPING BEFORE TRANSITIONING BACK TO NON-JOINT RESTRAINED PIPING.
8. REFER TO AREMA'S PART 5 - PIPELINE FOR ALL TECHNICAL REQUIREMENTS FOR RAILWAY BORING.
9. VENTS SHALL BE INSTALLED AS PER AREMA'S Part 5 - PIPELINE TECHNICAL

JONAH SUD | JONAH WATER SUD WATER CONSTRUCTION STANDARD DETAILS | RAILROAD CROSSING | STANDARD DETAIL W22 | SCALE N.T.S. | DATE 3-29-16 | DRAWN BY | APPROVED BY

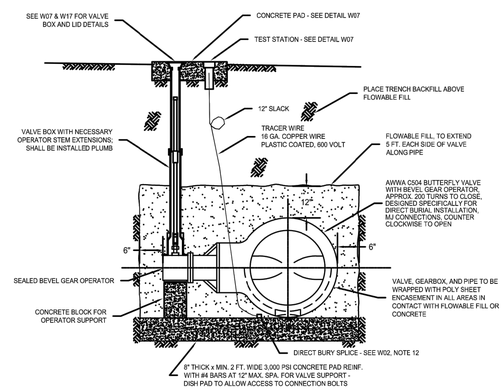

SECTIONAL ELEVATION

NOTES:
1. FLOWABLE FILL SHALL BE PLACED IN 12" HEIGHT MAXIMUM LIFTS.
2. PIPING CONNECTIONS SHALL BE RESTRAINED ON EACH SIDE OF VALVE.
3. VALVE GEAR BOX AND OPERATOR SHALL BE PLACED ON THE SIDE NEAREST TO THE EXISTING FENCE AND/OR PROPERTY LINE, UNLESS OTHERWISE APPROVED.
4. IF THE VALVE OPERATOR NUT IS MORE THAN 3 FT. BELOW THE SURFACE, EXTENSIONS SHALL BE PROVIDED TO BRING THE NUT TO WITHIN 2 FT. OF THE SURFACE.
5. VALVE OPERATOR NUT SHALL BE 2" SQUARE.
6. VALVE BOX SHALL BE EAST JORDAN IRON WORKS SERIES 8550 TWO PIECE SCREW TYPE, OR APPROVED EQUAL, HAVING AN ADJUSTMENT RANGE OF +/- 6 INCHES FROM FINISHED SURFACE.
7. SEE PLAN/PROFILE SHEETS FOR VALVE LOCATION AND SIZE.

JONAH SUD | JONAH WATER SUD WATER CONSTRUCTION STANDARD DETAILS | TYPICAL DIRECT BURY BUTTERFLY VALVE INSTALLATION DETAILS | STANDARD DETAIL W23 | SCALE N.T.S. | DATE 1-18-19 | DRAWN BY W.E.A. | APPROVED BY M.W.W.

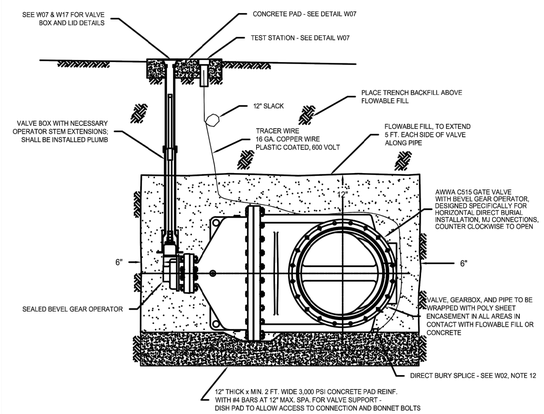

SECTIONAL ELEVATION

NOTES:
1. FLOWABLE FILL SHALL BE PLACED IN 12" HEIGHT MAXIMUM LIFTS.
2. PIPING CONNECTIONS SHALL BE RESTRAINED ON EACH SIDE OF VALVE.
3. VALVE GEAR BOX AND OPERATOR SHALL BE PLACED ON THE SIDE NEAREST TO THE EXISTING FENCE AND/OR PROPERTY LINE, UNLESS OTHERWISE APPROVED.
4. IF THE VALVE OPERATOR NUT IS MORE THAN 3 FT. BELOW THE SURFACE, EXTENSIONS SHALL BE PROVIDED TO BRING THE NUT TO WITHIN 2 FT. OF THE SURFACE.
5. VALVE OPERATOR NUT SHALL BE 2" SQUARE.
6. VALVE BOX SHALL BE EAST JORDAN IRON WORKS SERIES 8550 TWO PIECE SCREW TYPE, OR APPROVED EQUAL, HAVING AN ADJUSTMENT RANGE OF +/- 6 INCHES FROM FINISHED SURFACE.
7. SEE PLAN/PROFILE SHEETS FOR VALVE LOCATION AND SIZE.

JONAH SUD | JONAH WATER SUD WATER CONSTRUCTION STANDARD DETAILS | TYPICAL HORZINTAL GATE VALVE INSTALLATION DETAILS | STANDARD DETAIL W24 | SCALE N.T.S. | DATE 1-18-19 | DRAWN BY W.E.A. | APPROVED BY M.W.W.

REV	DESCRIPTION	DATE	APR
	Record Drawing		

DESIGNED BY: DAZ
REVIEWED BY: TMH
DRAWN BY: DAZ

BGE, INC.
1701 DIRECTORS BOULEVARD, SUITE 1000
AUSTIN, TX 78744
TBPE Registration No. F-1046
TEL: 512-879-0400 www.browngay.com

WILCO RANCH PHASE 3 SECTION 2
HUTTO, TEXAS

WATER DETAILS (3 OF 3)

SUBMITTAL DATE: 12-10-2020

TIMOTHY M. HOLLAND 94848 LICENSED PROFESSIONAL ENGINEER 3/3/2021

SHEET
41 OF 44

G:\TXC\Projects\Ashton_Woods\8022-00-Wilco_Ranch_Ph3_Sec2\LD\01_CADD\01_Shts\C-SP-DET_LPH 3-SEC 2.dwg Layout: WATER DETAILS (3 OF 3) Plotted: 8/3/2021 8:44:15 AM

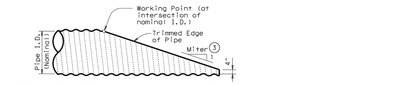

NOTE: All Pipe Runners, calculations, and dimensions are based on the pipe culverts mitered as shown in this detail. Alternate styles of mitered ends will require that appropriate adjustments be made to the values presented on this standard.

SIDE ELEVATION OF TYPICAL PIPE CULVERT MITER

(Showing Corrugated Metal Pipe Culvert. Details of Concrete Pipe Culvert are similar.)

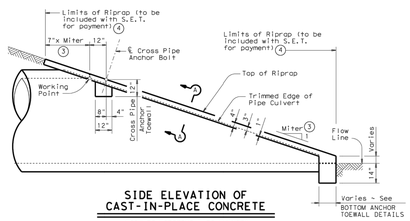

SIDE ELEVATION OF CAST-IN-PLACE CONCRETE

(Showing Concrete Pipe Culvert. Details of Corrugated Metal Pipe Culvert are similar. Pipe Runners not shown for clarity)

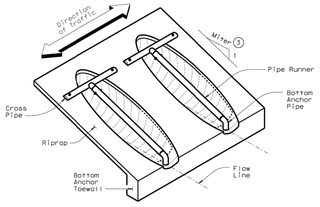

ISOMETRIC VIEW OF TYPICAL INSTALLATION

(Showing Installation with no skew.)

CROSS PIPE LENGTHS & PIPE RUNNER LENGTHS (1)(2)

Nominal Culvert I.D.	Pipe Culvert Spa ~ G	Cross Pipe Length	Pipe Runner Length 3:1 Side Slope 0° Skew	15° Skew	30° Skew	45° Skew	4:1 Side Slope 0° Skew	15° Skew	30° Skew	45° Skew	6:1 Side Slope 0° Skew	15° Skew	30° Skew	45° Skew
24"	1'- 7"	3'- 5"	N/A	N/A	N/A	5'-10"	N/A	N/A	N/A	8'- 1"	N/A	N/A	N/A	12'- 9"
27"	1'- 8"	3'- 8"	N/A	N/A	5'- 5"	6'-11"	N/A	N/A	7'- 7"	9'- 7"	N/A	N/A	11'-11"	14'-11"
30"	1'-10"	3'-11"	N/A	N/A	6'- 4"	8'- 0"	N/A	N/A	8'- 9"	11'- 0"	N/A	N/A	13'- 8"	17'- 0"
33"	1'-11"	4'- 2"	6'- 2"	6'- 5"	7'- 3"	9'- 1"	8'- 6"	8'-10"	10'- 0"	12'- 5"	13'- 3"	13'- 9"	15'- 5"	19'- 2"
36"	2'- 1"	4'- 5"	6'-11"	7'- 3"	8'- 2"	10'- 2"	9'- 6"	9'-11"	11'- 2"	13'-10"	14'- 9"	15'- 3"	17'- 2"	21'- 3"
42"	2'- 4"	4'-11"	8'- 6"	8'-10"	9'-11"	12'- 4"	11'- 7"	12'- 0"	13'- 6"	16'- 8"	17'- 9"	18'- 5"	20'- 8"	25'- 7"
48"	2'- 7"	5'- 5"	10'- 1"	10'- 5"	11'- 9"	N/A	13'- 7"	14'- 2"	15'-10"	N/A	20'- 9"	21'- 6"	24'- 2"	N/A
54"	3'- 0"	5'-11"	11'- 8"	12'- 1"	N/A	N/A	15'- 8"	16'- 3"	N/A	N/A	23'-10"	24'- 8"	N/A	N/A
60"	3'- 3"	6'- 5"	13'- 3"	N/A	N/A	N/A	17'- 9"	N/A	N/A	N/A	26'-10"	N/A	N/A	N/A

TYPICAL PIPE CULVERT MITERS (3)

Side Slope	0° Skew	15° Skew	30° Skew	45° Skew
3:1	3:1	3.106:1	3.464:1	4.243:1
4:1	4:1	4.141:1	4.619:1	5.657:1
6:1	6:1	6.212:1	6.928:1	8.485:1

CONDITIONS WHERE PIPE RUNNERS ARE NOT REQUIRED (2)

Nominal Culvert I.D.	Single Pipe Culvert	Multiple Pipe Culverts
12" thru 21"	Skews thru 45°	Skews thru 45°
24"	Skews thru 45°	Skews thru 30°
27"	Skews thru 30°	Skews thru 15°
30"	Skews thru 15°	Skews thru 15°
33"	Skews thru 15°	Always required
36"	Normal (No Skew)	Always required
42" to 60"	Always required	Always required

STANDARD PIPE SIZES & MAX PIPE RUNNER LENGTHS (1)

Pipe Size	Pipe O.D.	Pipe I.D.	Max Pipe Runner Length
2" STD	2.375"	2.067"	N/A
3" STD	3.500"	3.068"	10'- 0"
4" STD	4.500"	4.026"	19'- 8"
5" STD	5.563"	5.047"	34'- 2"

ESTIMATED CONCRETE RIPRAP QUANTITIES (CY) (5)

Nominal Culvert I.D.	3:1 Side Slope 0° Skew	15° Skew	30° Skew	45° Skew	4:1 Side Slope 0° Skew	15° Skew	30° Skew	45° Skew	6:1 Side Slope 0° Skew	15° Skew	30° Skew	45° Skew
12"	0.4	0.4	0.5	0.5	0.5	0.5	0.5	0.6	0.7	0.7	0.7	0.8
15"	0.5	0.5	0.5	0.6	0.6	0.6	0.6	0.7	0.7	0.7	0.8	0.9
18"	0.5	0.5	0.6	0.6	0.6	0.7	0.7	0.8	0.8	0.8	0.9	1.0
21"	0.6	0.6	0.6	0.7	0.7	0.7	0.8	0.9	0.9	0.9	1.0	1.2
24"	0.6	0.7	0.7	0.8	0.8	0.8	0.8	1.0	1.0	1.0	1.1	1.3
27"	0.7	0.7	0.8	0.9	0.8	0.9	0.9	1.1	1.1	1.1	1.2	1.4
30"	0.8	0.8	0.8	0.9	0.9	0.9	1.0	1.2	1.2	1.2	1.3	1.6
33"	0.8	0.8	0.9	1.0	1.0	1.0	1.1	1.3	1.3	1.4	1.5	1.7
36"	0.9	0.9	0.9	1.1	1.1	1.1	1.2	1.4	1.4	1.5	1.6	1.8
42"	1.0	1.0	1.1	1.3	1.2	1.3	1.3	1.6	1.6	1.7	1.8	2.1
48"	1.1	1.1	1.2	N/A	1.4	1.4	1.5	N/A	1.9	1.9	2.1	N/A
54"	1.3	1.3	N/A	N/A	1.6	1.6	N/A	N/A	2.1	2.1	N/A	N/A
60"	1.4	N/A	N/A	N/A	1.7	N/A	N/A	N/A	2.3	N/A	N/A	N/A

(1) Size of Pipe Runner shall be as shown in the tables. Cross Pipe shall be the same size as the Pipe Runner. Cross Pipe Stub Out and Bottom Anchor Pipe shall be the next smaller size pipe as shown in the STANDARD PIPE SIZES table.

(2) This standard allows for the placement of only one pipe runner across each culvert pipe opening. In order to limit the clear opening to be traversed by an errant vehicle, the following conditions must be met:

For 60" culvert pipes, the skew must not exceed 0°.
For 54" culvert pipes, the skew must not exceed 15°.
For 48" culvert pipes, the skew must not exceed 30°.
For all culvert pipe sizes 42" and less, the skew must not exceed 45°.

If the above conditions cannot be met, the designer should consider using a safety end treatment with flared wings. For further information, refer to the TxDOT "Roadway Design Manual".

(3) Miter • Slope of Mitered Pipe Culvert End

(4) Riprap placed beyond the limits shown will be paid as Concrete Riprap in accordance with Item 432, "Riprap".

(5) Quantities shown are for one end of one reinforced Concrete Pipe Culvert. For multiple Pipe Culverts or for Corrugated Metal Pipe Culverts, quantities will need to be adjusted. Riprap quantities are for Contractor's information only.

SHEET 1 OF 2

Texas Department of Transportation — Bridge Division Standard

SAFETY END TREATMENT
FOR 12" DIA TO 60" DIA
PIPE CULVERTS
TYPE II – CROSS DRAINAGE

SETP-CD

FILE: setp1ctxt.dgn	DN: GAF	CK: CAT	DW: JBP	CK: GAF
©TxDOT February 2010	CONT	SECT	JOB	HIGHWAY
REVISIONS 11-10: Add note for synthetic fibers.	DIST		COUNTY	SHEET NO.

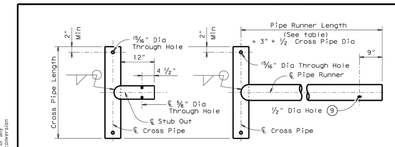

CROSS PIPE AND CONNECTIONS DETAILS

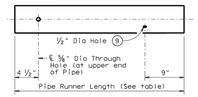

NOTE: The separate Pipe Runner shown is required when Cross Pipe Connection Option A1 is used.

PIPE RUNNER DETAILS

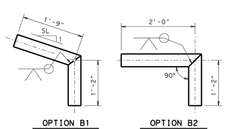

BOTTOM ANCHOR PIPE DETAILS (10)

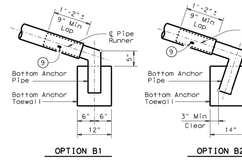

BOTTOM ANCHOR TOEWALL DETAILS

(Culvert & Riprap not shown for clarity)

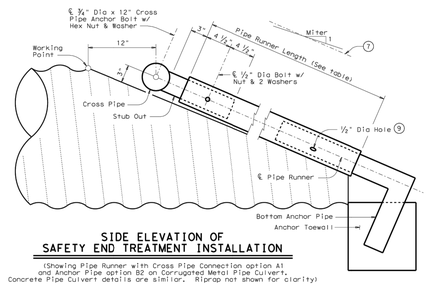

SIDE ELEVATION OF SAFETY END TREATMENT INSTALLATION

(Showing Pipe Runner with Cross Pipe Connection option A1 and Anchor Pipe option B2 on Corrugated Metal Pipe Culvert. Concrete Pipe Culvert details are similar. Riprap not shown for clarity)

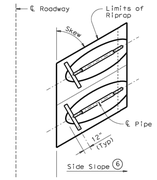

PLAN OF SKEWED INSTALLATION

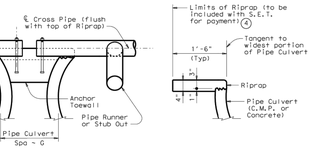

SHOWING CROSS PIPE & ANCHOR TOEWALL

SHOWING TYPICAL PIPE CULVERT & RIPRAP

SECTION A-A

(4) Riprap placed beyond the limits shown will be paid as Concrete Riprap in accordance with Item 432, "Riprap".

(6) Recommended values of side slope are 3:1, 4:1, & 6:1. All quantities, calculations, and dimensions shown herein are based on these recommended values. Slope of 3:1 or flatter is required for vehicle safety.

(7) Note that actual slope of Pipe Runner may vary slightly from Side Slope of Riprap and trimmed Culvert Pipe edge.

(8) Care shall be taken to ensure that Riprap concrete does not flow into the Cross Pipe so as to permit disassembly of the bolted connection to allow cleanout access.

(9) After Installation, the 1/2" hole shall be inspected to ensure that the lap of the Pipe Runner with the Bottom Anchor Pipe is adequate.

(10) At fabricator's option, a heat bend to a smooth 5° radius or a manufactured elbow (of the same material as the Runner) may be substituted for the mitered and welded joint in the Bottom Anchor Pipe.

GENERAL NOTES:

Pipe Runners are designed for a traversing load of 1,800 pounds at yield as recommended by Research Report 280-1, "Safety Treatment of Roadside Cross-Drainage Structures", Texas Transportation Institute, March 1981.

The Safety End Treatments shown herein are intended for use in those installations where out of control vehicles are likely to traverse the openings approximately perpendicular to the Pipe Runners.

Riprap and all necessary inverts shall be Concrete Riprap conforming to the requirements of Item 432, "Riprap".

Fibers listed as the "Fibers for Concrete" Material Producer List (MPL) may be used in lieu of steel reinforcing in riprap concrete unless noted otherwise.

Payment for riprap and toewall is included in the Price Bid for each Safety End Treatment.

Pipe Runners, Cross Pipes, and Anchor Pipes shall conform to the requirements of ASTM A53 (Type E or S, Grade B), ASTM A500 (Grade B), or API 5L X52.

Bolts and nuts shall conform to ASTM A307.

All steel components, except concrete reinforcing, shall be galvanized after fabrication. Galvanizing damaged during transport or construction shall be repaired in accordance with the specifications.

SHEET 2 OF 2

Texas Department of Transportation — Bridge Division Standard

SAFETY END TREATMENT
FOR 12" DIA TO 60" DIA
PIPE CULVERTS
TYPE II – CROSS DRAINAGE

SETP-CD

FILE: setp1ctxt.dgn	DN: GAF	CK: CAT	DW: JBP	CK: GAF
©TxDOT February 2010	CONT	SECT	JOB	HIGHWAY
REVISIONS 11-10: Add note for synthetic fibers.	DIST		COUNTY	SHEET NO.

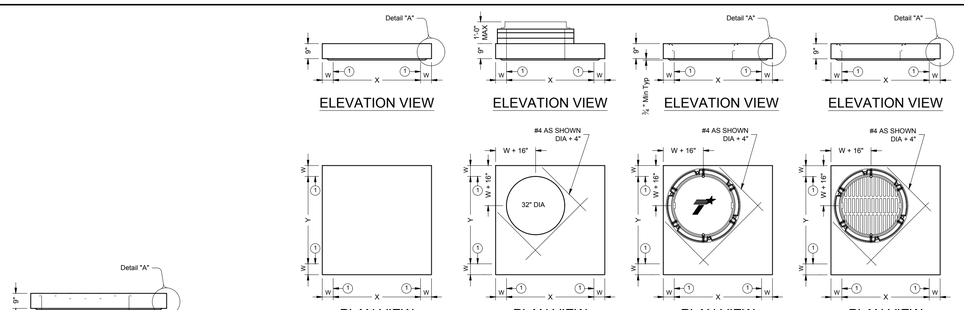

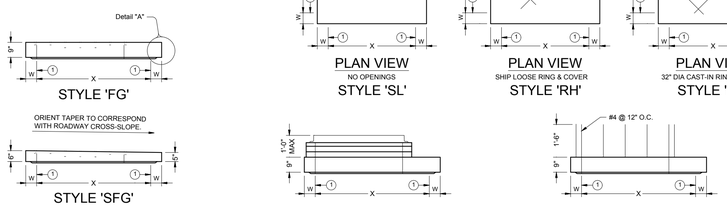

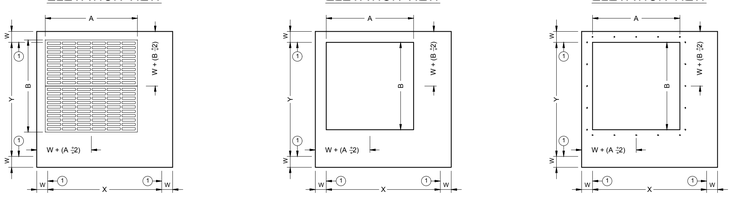

(1) Matches inside face of wall of precast base or riser below inlet.

HL93 LOADING — SHEET 1 OF 2

Texas Department of Transportation — Bridge Division Standard

PRECAST SLAB LID

PSL

FILE: prest05.dgn	DN: TxDOT	CK: TxDOT	DW: TxDOT	CK: TxDOT
©TxDOT January 2015	CONT	SECT	JOB	HIGHWAY
REVISIONS	DIST		COUNTY	SHEET NO.

Short Span Reinf Steel Style	Long Span Reinf Steel Style	Size (X x Y) W	(2) x B (nominal)	Area	Area
SL		3'x3'	6"	n/a	0.37 in ft / 0.37 in ft
RH,RC,RG,SH,S1,FG		3'x3'	6"	3'x3' or 32" Dia	0.37 in ft / 0.37 in ft
SFG		3'x3'	6"	3'x3'	0.32 in ft / 0.32 in ft
SL		4'x4'	6"	n/a	0.34 in ft / 0.34 in ft
RH,RC,RG,SH,S1,FG		4'x4'	6"	3'x3' or 32" Dia	0.41 in ft / 0.41 in ft
SH,S1,FG		4'x4'	6"	4'x4'	0.41 in ft / 0.41 in ft
SFG		4'x4'	6"	4'x4'	0.32 in ft / 0.32 in ft
SL		3'x5'	6"	n/a	0.39 in ft / 0.39 in ft
RH,RC,RG,SH,S1,FG		3'x5'	6"	3'x3' or 32" Dia	0.48 in ft / 0.48 in ft
SH,S1,FG		3'x5'	6"	3'x5'	0.48 in ft / 0.48 in ft
SFG		3'x5'	6"	3'x5'	0.32 in ft / 0.32 in ft
SL		4'x5'	6"	n/a	0.42 in ft / 0.42 in ft
RH,RC,RG,SH,S1,FG		4'x5'	6"	3'x3' or 32" Dia	0.42 in ft / 0.42 in ft
SH,S1,FG		4'x5'	6"	4'x4'	0.63 in ft / 0.63 in ft
SH,S1,FG		4'x5'	6"	3'x5'	0.66 in ft / 0.66 in ft
SL		5'x5'	6"	n/a	0.36 in ft / 0.36 in ft
RH,RC,RG,SH,S1,FG		5'x5'	6"	3'x3' or 32" Dia	0.43 in ft / 0.43 in ft
SH,S1,FG		5'x5'	6"	4'x4'	0.63 in ft / 0.63 in ft
SH,S1,FG		5'x5'	6"	3'x5'	0.63 in ft / 0.63 in ft
SL		5'x6'	6"/8"	n/a	0.48 in ft / 0.48 in ft
RH,RC,RG,SH,S1,FG		5'x6'	6"/8"	3'x3' or 32" Dia	0.48 in ft / 0.48 in ft
SH,S1,FG		5'x6'	6"/8"	4'x4'	0.60 in ft / 0.60 in ft
SH,S1,FG		5'x6'	6"/8"	3'x5'	0.60 in ft / 0.60 in ft
SL		6'x6'	6"/8"	n/a	0.43 in ft / 0.43 in ft
RH,RC,RG,SH,S1,FG		6'x6'	6"/8"	3'x3' or 32" Dia	0.56 in ft / 0.56 in ft
SH,S1,FG		6'x6'	6"/8"	4'x4'	0.56 in ft / 0.56 in ft
SH,S1,FG		6'x6'	6"/8"	3'x5'	0.59 in ft / 0.59 in ft
SL		8'x8'	8"/10"	n/a	0.45 in ft / 0.45 in ft
RH,RC,RG,SH,S1,FG		8'x8'	8"/10"	3'x3' or 32" Dia	0.45 in ft / 0.45 in ft
SH,S1,FG		8'x8'	8"/10"	4'x4'	0.45 in ft / 0.45 in ft
SH,S1,FG		8'x8'	8"/10"	3'x5'	0.45 in ft / 0.45 in ft

(2) See sheet PDD for corresponding wall thickness (W) of base unit or riser.

FABRICATION NOTES:
1. Locate penetration (Style 'RH'), ring and cover (Style 'RC'), ring and grate (Style 'RG'), and frame and grate (Style 'FG') in a corner. Only one penetration is allowed per slab lid.
2. Provide Class "H" concrete in accordance with Item 421 and having a minimum compressive strength of 5,000 psi.
3. Provide Grade 60 reinforcing steel or equivalent area of WWR.
4. Provide clear cover of ½" to reinforcing from lower outside shoulder of slab for structural reinforcement, and 2" from top of slab for shrinkage and temperature reinforcing. Do not place reinforcing within 2" of any surface.
5. Slabs with a thickness of 8" or greater require shrinkage and temperature reinforcing. Provide steel area of 0.11 in²/ft each way.
6. No substitution is allowed for proposed #4 bars around openings.
7. Design tongue and groove joints for full closure on both shoulders. Minimum spigot depth is ¾".
8. Provide lifting devices in conformance with Manufacturer's recommendations.

INSTALLATION NOTES:
1. Precast slab lids are intended for direct traffic and may be placed in roadway.
2. Seal tongue and groove joints with preformed or bulk mastic in conformance with Manufacturer's recommendations. Tongue and groove joints may be grouted no more than 1" between each section, or ½ the joint depth, whichever is greater.
3. Do not grout rubber gasket joints without Manufacturer's recommendation.
4. Initial installation of grade adjustment rings for Styles 'RH' and 'SH' is limited to 1'-0" Max as shown.
5. Grade adjustment rings for Styles 'RH' and 'SH' may be increased to 2'-0" Max when future construction affects final grade of structure. Make adjustments greater than 2'-0" with additional risers. Adjustments can be made up to Max depth shown on sheet PDD. Structure must be evaluated if Max depth will be exceeded.
6. Orient long dimension of grate slots perpendicular to traffic, unless noted otherwise on plans

GENERAL NOTES:
1. Designed according to ASTM C913.
2. Payment for lid is per Item 465, "Junction Boxes, Manholes, and Inlets" by type, style, size, and opening size (when applicable).

Cover dimensions are clear dimensions, unless noted otherwise.

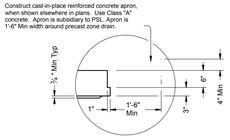

DETAIL "A"
(Reinforcing not shown for clarity)
When an apron is to be cast around PSL, use detail above to create an apron ledge on all 4 sides.

HL93 LOADING — SHEET 2 OF 2

Texas Department of Transportation — Bridge Division Standard

PRECAST SLAB LID

PSL

FILE: prest05.dgn	DN: TxDOT	CK: TxDOT	DW: TxDOT	CK: TxDOT
©TxDOT January 2015	CONT	SECT	JOB	HIGHWAY
REVISIONS	DIST		COUNTY	SHEET NO.

REV	DATE	DESCRIPTION	APR
		Record Drawing	

DESIGNED BY: DAZ
REVIEWED BY: TMH
DRAWN BY: DAZ

BGE, INC.
1701 DIRECTORS BOULEVARD, SUITE 1000
AUSTIN, TX 78744
TBPE Registration No. F-1046
TEL: 512-879-0400 www.bgeinc.com

WILCO RANCH PHASE 3 SECTION 2
HUTTO, TEXAS

TXDOT DETAILS (1 OF 3)

SUBMITTAL DATE: 12-10-2020

STATE OF TEXAS — TIMOTHY M. HOLLAND — 94848 — LICENSED PROFESSIONAL ENGINEER — 8/3/2021

SHEET 42 OF 44

DISCLAIMER: The use of this standard is governed by the "Texas Engineering Practice Act". No warranty of any kind is made by TxDOT for any purpose whatsoever. TxDOT assumes no responsibility for the conversion of this standard to other formats or for incorrect results or damages resulting from its use.

DISCLAIMER: The use of this standard is governed by the "Texas Engineering Practice Act". No warranty of any kind is made by TxDOT for any purpose whatsoever. TxDOT assumes no responsibility for the conversion of this standard to other formats or for incorrect results or damages resulting from its use.

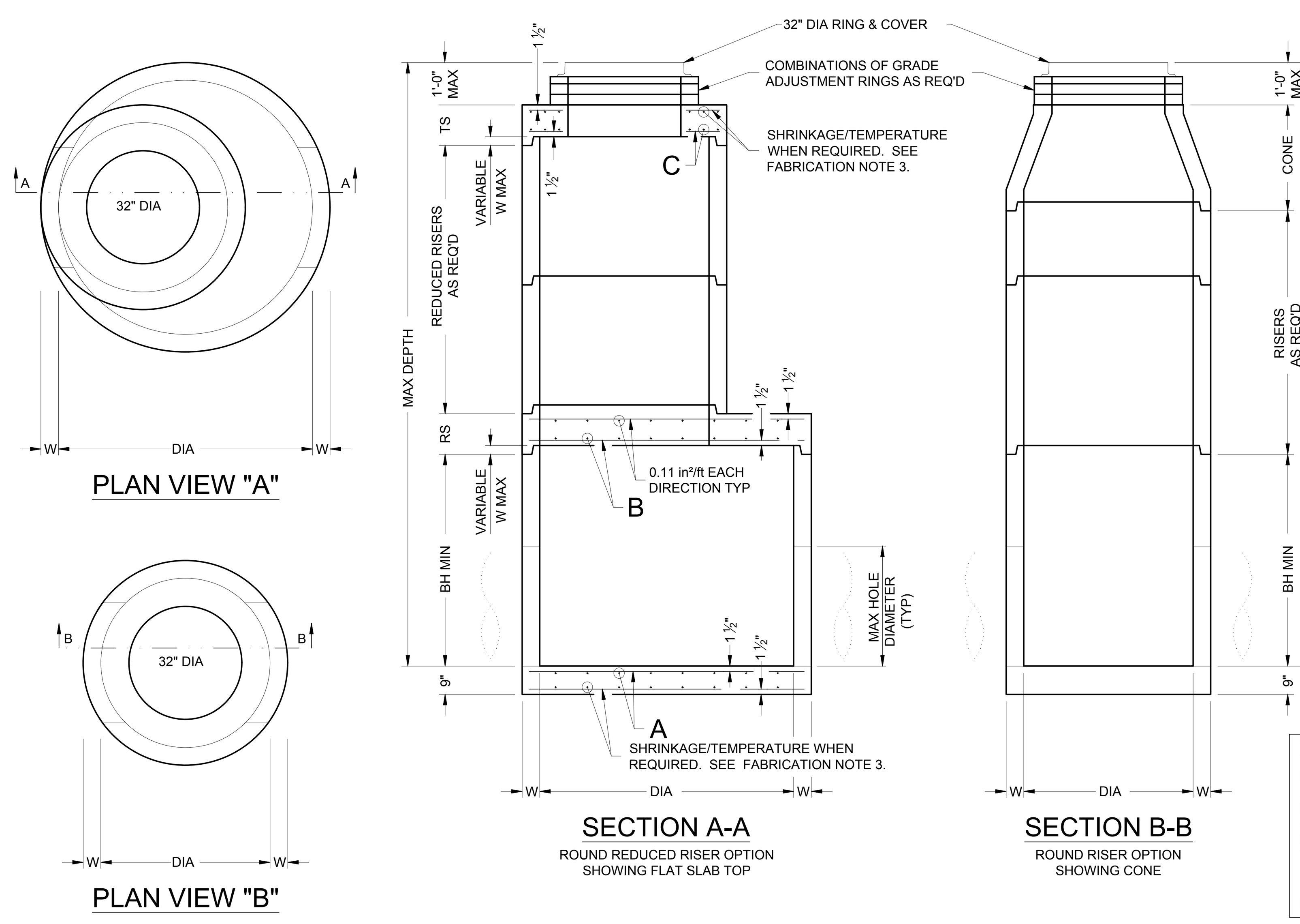

FABRICATION NOTES:
1. Provide Class "H" concrete in accordance with Item 421 and having a minimum compressive strength of 5,000 psi.
2. Provide Grade 60 reinforcing steel or equivalent area of WWR. Provide circumferential reinforcing steel in vertical walls of base, riser and cone in accordance with ASTM C478.
3. Slabs with a thickness of 8" or greater require shrinkage and temperature reinforcing steel. Provide steel area = 0.11 in²/ft each way.
4. Manufacture base and risers to nearest 3" increment.
5. Design tongue and groove joints for full closure on both shoulders. Minimum spigot depth is ¾".
6. Provide lifting devices in conformance with Manufacturer's recommendations.
7. Provide cast iron solid cover, unless noted otherwise elsewhere in the plans.

INSTALLATION NOTES:
1. Cones may be concentric or eccentric. Reduction cones are acceptable. See Manufacturer for cone dimensions.
2. Inverts (benching) to be provided by Contractor. Concrete or mortar used for invert is subsidiary to this item.
3. Seal tongue and groove joints with preformed or bulk mastic in conformance with Manufacturer's recommendations. Tongue and groove joints may be grouted no more than 1" between each section, or ½ the joint depth, whichever is greater.
4. Do not grout rubber gasket joints without Manufacturer's recommendation.
5. Initial installation of grade adjustment rings is limited to 1'-0" Max as shown.
6. Grade adjustment rings may be increased to 2'-0" Max when future construction affects final grade of structure. Make adjustments greater than 2'-0" with additional risers. Adjustments may be made up to the Max depth shown. Structure must be evaluated if Max depth will be exceeded.

GENERAL NOTES:
1. Designed according to ASTM C478.
2. Payment for manhole is per Item 465, "Junction Boxes, Manholes, and Inlets" by type and size.
3. Pipe OD + placement tolerance must be equal or less than Max hole diameter. For rigid pipe, placement tolerance is 4" Max, 2" Min. For flexible pipe, consult boot/seal manufacturer's specification for placement tolerance.

Cover dimensions are clear dimensions, unless noted otherwise.

SIZE (DIA)	48 in	60 in	72 in
W	5 in	6 in	7 in
MAX DEPTH	25 ft	25 ft	25 ft
A (EACH WAY)	0.22 in²/ft	0.30 in²/ft	0.45 in²/ft
B (EACH WAY)	N/A	0.37 in²/ft	0.62 in²/ft
C (EACH WAY)	0.24 in²/ft	0.46 in²/ft	0.46 in²/ft
BH MIN	12 in	36 in	36 in
TS	9 in	9 in	9 in
RS	N/A	9 in	12 in
REDUCED RISER DIA	N/A	48 in	48/60 in
MAX HOLE DIA	32 in	40 in	54 in

HL93 LOADING

Texas Department of Transportation — Bridge Division Standard

PRECAST ROUND MANHOLE

PRM

FILE: prestd02.dgn | DN: TxDOT | CK: TxDOT | DW: TxDOT | CK: TxDOT
©TxDOT January 2015 | CONT | SECT | JOB | HIGHWAY
REVISIONS | DIST | COUNTY | SHEET NO.

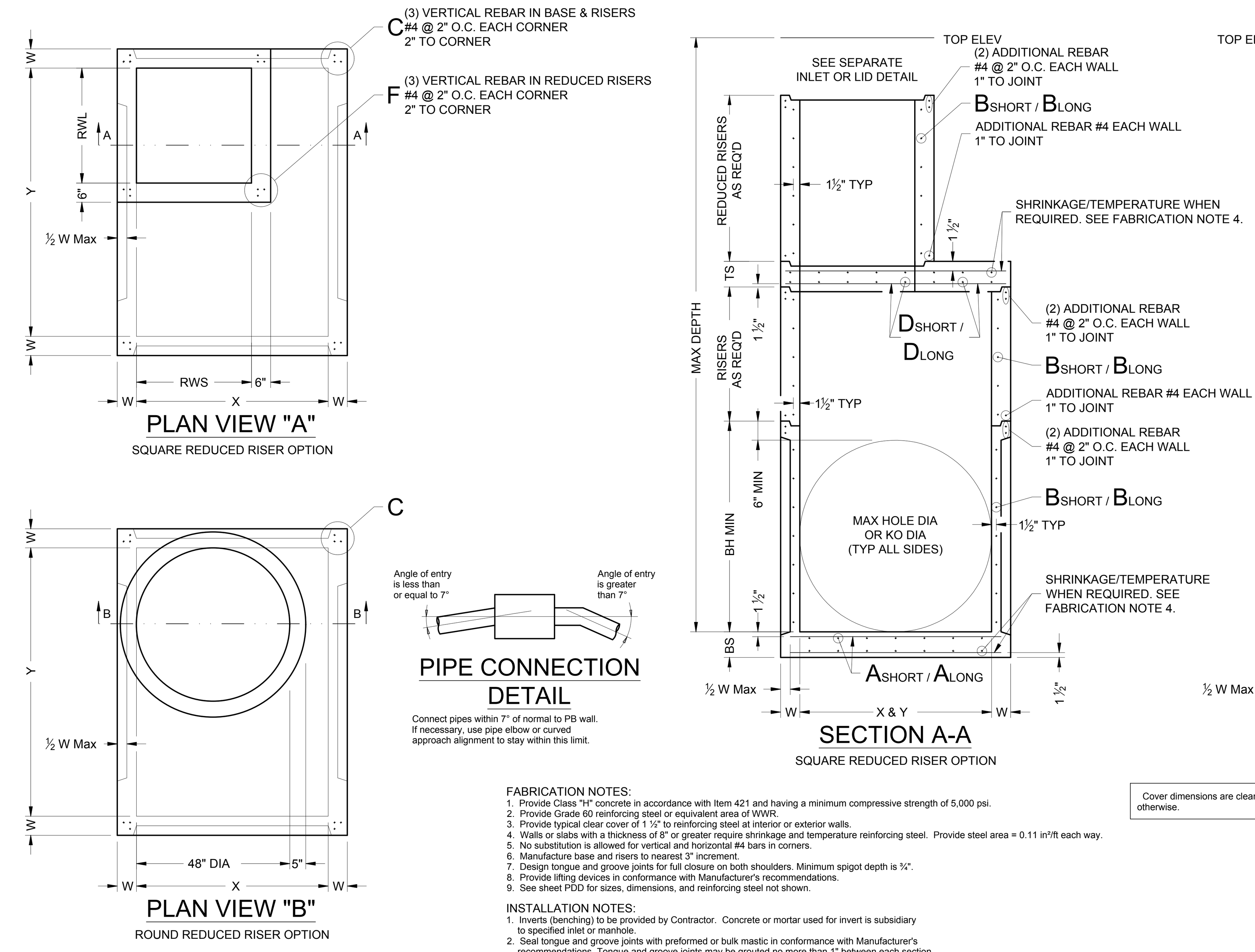

FABRICATION NOTES:
1. Provide Class "H" concrete in accordance with Item 421 and having a minimum compressive strength of 5,000 psi.
2. Provide Grade 60 reinforcing steel or equivalent area of WWR.
3. Provide typical clear cover of 1 ½" to reinforcing steel at interior or exterior walls.
4. Walls or slabs with a thickness of 8" or greater require shrinkage and temperature reinforcing steel. Provide steel area = 0.11 in²/ft each way.
5. No substitution is allowed for vertical and horizontal #4 bars in corners.
6. Manufacture base and risers to nearest 3" increment.
7. Design tongue and groove joints for full closure on both shoulders. Minimum spigot depth is ¾".
8. Provide lifting devices in conformance with Manufacturer's recommendations.
9. See sheet PDD for sizes, dimensions, and reinforcing steel not shown.

INSTALLATION NOTES:
1. Inverts (benching) to be provided by Contractor. Concrete or mortar used for invert is subsidiary to specified inlet or manhole.
2. Seal tongue and groove joints with preformed or bulk mastic in conformance with Manufacturer's recommendations. Tongue and groove joints may be grouted no more than 1" between each section, or ½ the joint depth, whichever is greater.
3. Do not grout rubber gasket joints without Manufacturer's recommendation.
4. For rigid pipe, cut hole in thin wall panel (KO) 4" Max, 2" Min larger than pipe OD.
5. For flexible pipe, consult boot/seal Manufacturer's specification for placement tolerance and hole size. Center pipe in hole and install boot/seal per Manufacturer's specification.

GENERAL NOTES:
1. Precast Base consists of base slab, base unit, risers (as required), reducing slab (as required), and reduced risers (as required). See sheet PDD for sizes.
2. Designed according to ASTM C913.
3. Payment for precast base is subsidiary to the specified inlet, per Item 465, "Junction Boxes, Manholes, and Inlets."

Cover dimensions are clear dimensions, unless noted otherwise.

HL93 LOADING

Texas Department of Transportation — Bridge Division Standard

PRECAST BASE

PB

FILE: prestd01.dgn | DN: TxDOT | CK: TxDOT | DW: TxDOT | CK: TxDOT
©TxDOT January 2015 | CONT | SECT | JOB | HIGHWAY
REVISIONS | DIST | COUNTY | SHEET NO.

Type	Size	15 ft Base Slab Short SpanReinf SteelArea	15 ft Base Slab Long SpanReinf SteelArea	15 ft Base Slab Thickness	15 ft Base Unit or Riser Walls Short SpanReinf SteelArea	15 ft Base Unit or Riser Walls Long SpanReinf SteelArea	15 ft Base Unit or Riser Walls Thickness	15 ft Below Grade Slab (w/PJB) Reducing Slab (w/PB) Reduced Riser Size	15 ft Below Grade Slab Short SpanReinf SteelArea	15 ft Below Grade Slab Long SpanReinf SteelArea	15 ft Below Grade Slab Thickness	25 ft Base Slab Short SpanReinf SteelArea	25 ft Base Slab Long SpanReinf SteelArea	25 ft Base Slab Thickness	25 ft Base Unit or Riser Walls Short SpanReinf SteelArea	25 ft Base Unit or Riser Walls Long SpanReinf SteelArea	25 ft Base Unit or Riser Walls Thickness	25 ft Below Grade Slab (w/PJB) Reducing Slab (w/PB) Reduced Riser Size	25 ft Below Grade Slab Short SpanReinf SteelArea	25 ft Below Grade Slab Long SpanReinf SteelArea	25 ft Below Grade Slab Thickness	Min Height (See Gen Note 3)	Max HOLE DIA (See Fab Note 2)	Max KO DIA (See Fab Note 2)
	X x Y	Ashort	Along	BS	Bshort	Blong	W	RWSxRWL or ID	Dshort	Dlong	TS	Ashort	Along	BS	Bshort	Blong	W	RWSxRWL or ID	Dshort	Dlong	TS	BH MIN	HOLE DIA	KO DIA
	ft.	in²/ft	in²/ft	in.	in²/ft	in²/ft	in.	ft. **	in²/ft	in²/ft	in.	in²/ft	in²/ft	in.	in²/ft	in²/ft	in.	ft. **	in²/ft	in²/ft	in.	ft.	in.	in.
Precast Junction Box (PJB)	3x3	0.23	0.23	6	0.19	0.19	6	N/A	0.37	0.37	9	0.29	0.29	6	0.24	0.24	6	N/A	0.37	0.37	9	3.5	36	36
	4x4	0.29	0.29	6	0.24	0.24	6	N/A	0.41	0.41	9	0.47	0.47	6	0.38	0.38	6	N/A	0.41	0.41	9	4.5	48	48
	3x5	0.29	0.18	6	0.19	0.35	6	N/A	0.48	0.48	9	0.39	0.18	6	0.23	0.59	6	N/A	0.48	0.48	9	3.5	36/60	36/60
	4x5	0.36	0.18	6	0.22	0.34	6	N/A	0.42	0.42	9	0.53	0.26	6	0.39	0.59	6	N/A	0.42	0.42	9	4.5	48/60	48/60
	5x5	0.36	0.36	6	0.34	0.34	6	N/A	0.43	0.43	9	0.62	0.62	6	0.59	0.59	6	N/A	0.43	0.43	9	5.5	60	60
	5x6	0.27	0.27	9	0.34	0.45	6	N/A	0.48	0.48	9	0.47	0.45	9	0.38	0.54	8	N/A	0.48	0.48	9	5.5	60/72	60/72
	6x6	0.27	0.27	9	0.45	0.45	6	N/A	0.56	0.56	9	0.52	0.52	9	0.54	0.54	8	N/A	0.56	0.56	9	6.5	72	72
	8x8	0.46	0.46	9	0.51	0.51	8	N/A	0.45	0.45	12	0.87	0.87	9	0.59	0.59	10	N/A	0.45	0.45	12	8.5	96	72
Precast Base (PB)	3x3	0.23	0.23	6	0.19	0.19	6	N/A	N/A	N/A	N/A	0.29	0.29	6	0.24	0.24	6	N/A	N/A	N/A	N/A	3.5	36	36
	4x4	0.29	0.29	6	0.24	0.24	6	N/A	N/A	N/A	N/A	0.47	0.47	6	0.38	0.38	6	N/A	N/A	N/A	N/A	4.5	48	48
	3x5	0.29	0.18	6	0.19	0.35	6	3x3	0.30	0.34	9	0.39	0.18	6	0.23	0.59	6	3x3	0.40	0.40	9	3.5	36/60	36/60
	4x5	0.36	0.18	6	0.22	0.34	6	3x3	0.30	0.30	9	0.53	0.26	6	0.39	0.59	6	3x3	0.46	0.37	9	4.5	48/60	48/60
	4x5	0.36	0.18	6	0.22	0.34	6	4x4	0.30	0.30	9	0.53	0.26	6	0.39	0.59	6	4x4	0.39	0.39	9	4.5	48/60	48/60
	4x5	0.36	0.18	6	0.22	0.34	6	48"	0.39	0.39	9	0.53	0.26	6	0.39	0.59	6	48"	0.47	0.47	9	4.5	48/60	48/60
	4x5	0.36	0.18	6	0.22	0.34	6	3x5	0.33	0.40	9	0.53	0.26	6	0.39	0.59	6	3x5	0.48	0.48	9	4.5	48/60	48/60
	5x5	0.36	0.36	6	0.34	0.34	6	3x3	0.34	0.34	9	0.62	0.62	6	0.59	0.59	6	3x3	0.53	0.53	9	5.5	60	60
	5x5	0.36	0.36	6	0.34	0.34	6	4x4	0.36	0.36	9	0.62	0.62	6	0.59	0.59	6	4x4	0.64	0.64	9	5.5	60	60
	5x5	0.38	0.38	6	0.34	0.34	6	48"	0.36	0.36	9	0.62	0.62	6	0.59	0.59	6	48"	0.64	0.64	9	5.5	60	60
	5x5	0.36	0.36	6	0.34	0.34	6	3x5	0.34	0.40	9	0.62	0.62	6	0.59	0.59	6	3x5	0.53	0.53	9	5.5	60	60
	5x6	0.31	0.31	9	0.34	0.45	6	3x3	0.34	0.34	9	0.47	0.45	9	0.38	0.54	8	3x3	0.61	0.50	9	5.5	60/72	60/72
	5x6	0.27	0.27	9	0.34	0.45	6	4x4	0.36	0.45	9	0.47	0.45	9	0.38	0.54	8	4x4	0.74	0.57	9	5.5	60/72	60/72
	5x6	0.29	0.29	9	0.34	0.45	6	48"	0.36	0.45	9	0.47	0.45	9	0.38	0.54	8	48"	0.74	0.57	9	5.5	60/72	60/72
	5x6	0.29	0.29	9	0.34	0.45	6	3x5	0.45	0.45	9	0.47	0.45	9	0.38	0.54	8	3x5	0.61	0.61	9	5.5	60/72	60/72
	6x6	0.29	0.29	9	0.45	0.45	6	3x3	0.41	0.41	9	0.52	0.52	9	0.54	0.54	8	3x3	0.74	0.74	9	6.5	72	72
	6x6	0.27	0.27	9	0.45	0.45	6	4x4	0.45	0.45	9	0.52	0.52	9	0.54	0.54	8	4x4	0.87	0.87	9	6.5	72	72
	6x6	0.29	0.29	9	0.45	0.45	6	48"	0.45	0.45	9	0.52	0.52	9	0.54	0.54	8	48"	0.87	0.87	9	6.5	72	72
	6x6	0.29	0.29	9	0.45	0.45	6	3x5	0.45	0.45	9	0.52	0.52	9	0.54	0.54	8	3x5	0.87	0.87	9	6.5	72	72
	8x8	0.52	0.52	9	0.51	0.51	8	3x3	0.61	0.61	12	0.91	0.91	9	0.70	0.70	10	3x3	0.85	0.85	12	8.5	96	72
	8x8	0.52	0.52	9	0.51	0.51	8	4x4	0.70	0.70	12	0.87	0.87	9	0.70	0.70	10	4x4	1.01	1.01	12	8.5	96	72
	8x8	0.52	0.52	9	0.51	0.51	8	48"	0.70	0.70	12	0.87	0.87	9	0.70	0.70	10	48"	1.01	1.01	12	8.5	96	72
	8x8	0.52	0.52	9	0.51	0.51	8	3x5	0.70	0.85	12	0.87	0.87	9	0.70	0.70	10	3x5	1.01	1.01	12	8.5	96	72

MAX DEPTH = 15 ft. to top of BASE SLAB; MAX DEPTH = 25 ft. to top of BASE SLAB

** Unless otherwise indicated.

FABRICATION NOTES:
1. Maximum spacing of reinforcement is 8".
2. At manufacturer's option, provide cast or cored holes or thin wall panels (KO) to the maximum diameter shown for each. When no penetration is required, it is acceptable to provide a wall with no sectional reduction.

GENERAL NOTES:
1. Precast Junction Box consists of base slab, base unit, risers (as required), and below grade slab. See sheet PJB for details.
2. Precast Base consists of base slab, base unit, risers (as required), reducing slab (as required), and reduced risers (as required). See sheet PB for details.
3. Min Height shown is for stock base units. Use stock base units whenever practical. Smaller height base units can be used in special installation circumstances, when noted elsewhere in the plans. Absolute minimum height of base units is 2'-6".

HL93 LOADING

Texas Department of Transportation — Bridge Division Standard

DESIGN DATA FOR PRECAST BASE AND JUNCTION BOX

PDD

FILE: prestd10.dgn | DN: TxDOT | CK: TxDOT | DW: TxDOT | CK: TxDOT
©TxDOT January 2015 | CONT | SECT | JOB | HIGHWAY
REVISIONS | DIST | COUNTY | SHEET NO.

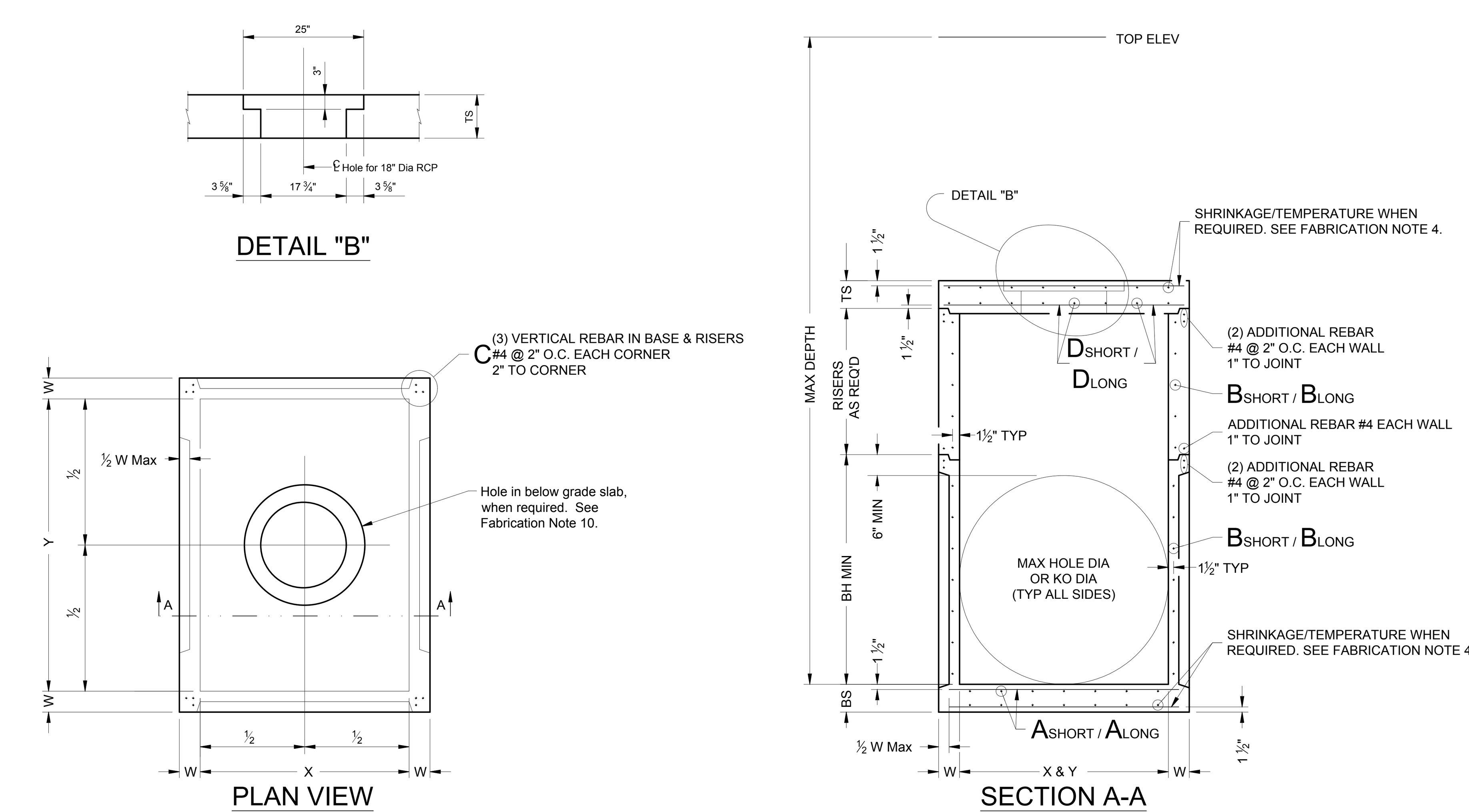

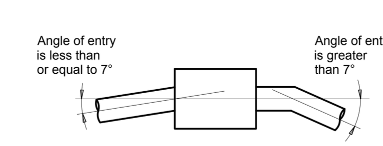

PIPE CONNECTION DETAIL

Connect pipes within 7° of normal to PJB wall. If necessary, use pipe elbow or curved approach alignment to stay within this limit.

FABRICATION NOTES:
1. Provide Class "H" concrete in accordance with Item 421 and having a minimum compressive strength of 5,000 psi.
2. Provide Grade 60 reinforcing steel or equivalent area of WWR.
3. Provide typical clear cover of 1 ½" to reinforcing steel at interior or exterior walls.
4. Walls or slabs with a thickness of 8" or greater require shrinkage and temperature reinforcing steel. Provide steel area = 0.11 in²/ft each way.
5. No substitution is allowed for vertical and horizontal #4 bars in corners.
6. Manufacture base and risers to nearest 3" increment.
7. Design tongue and groove joints for full closure on both shoulders. Minimum spigot depth is ¾".
8. Provide lifting devices in conformance with Manufacturer's recommendations.
9. See sheet PDD for sizes, dimensions, and reinforcing steel not shown.
10. Provide hole in below grade slab only when PJB is installed with inlet type POD.

INSTALLATION NOTES:
1. Inverts (benching) to be provided by Contractor. Concrete or mortar used for invert is subsidiary to junction box.
2. Seal tongue and groove joints with preformed or bulk mastic in conformance with Manufacturer's recommendations. Tongue and groove joints may be grouted no more than 1" between each section, or ½ the joint depth, whichever is greater.
3. Do not grout rubber gasket joints without Manufacturer's recommendation.
4. For rigid pipe, cut hole in thin wall panel (KO) 4" Max, 2" Min larger than pipe OD.
5. For flexible pipe, consult boot/seal Manufacturer's specification for placement tolerance and hole size. Center pipe in hole and install boot/seal per Manufacturer's specification.

GENERAL NOTES:
1. Precast Junction Box consists of base slab, base unit, risers (as required), and below grade slab. See sheet PDD for sizes.
2. Designed according to ASTM C913.
3. Payment for junction box is per Item 465 "Junction Boxes, Manholes, and Inlets" by type and size.

Cover dimensions are clear dimensions, unless noted otherwise.

HL93 LOADING

Texas Department of Transportation — Bridge Division Standard

PRECAST JUNCTION BOX

PJB

FILE: prestd09.dgn | DN: TxDOT | CK: TxDOT | DW: TxDOT | CK: TxDOT
©TxDOT January 2015 | CONT | SECT | JOB | HIGHWAY
REVISIONS | DIST | COUNTY | SHEET NO.

REV	DESCRIPTION	DATE	APR
	Record Drawing		

DESIGNED BY: DAZ
REVIEWED BY: TMH
DRAWN BY: DAZ

BGE, INC.
1701 DIRECTORS BOULEVARD, SUITE 1000
AUSTIN, TX 78744
TBPE Registration No. F-1046
TEL: 512-879-0400 www.browngay.com

WILCO RANCH PHASE 3 SECTION 2
HUTTO, TEXAS
TXDOT DETAILS (2 OF 3)

SUBMITTAL DATE: 12-10-2020

STATE OF TEXAS
TIMOTHY M. HOLLAND
94848
LICENSED PROFESSIONAL ENGINEER
8/3/2021

SHEET
43 OF 44

DISCLAIMER: The use of this standard is governed by the "Texas Engineering Practice Act". No warranty of any kind is made by TxDOT for any purpose whatsoever. TxDOT assumes no responsibility for the conversion of this standard to other formats or for incorrect results or damages resulting from its use.

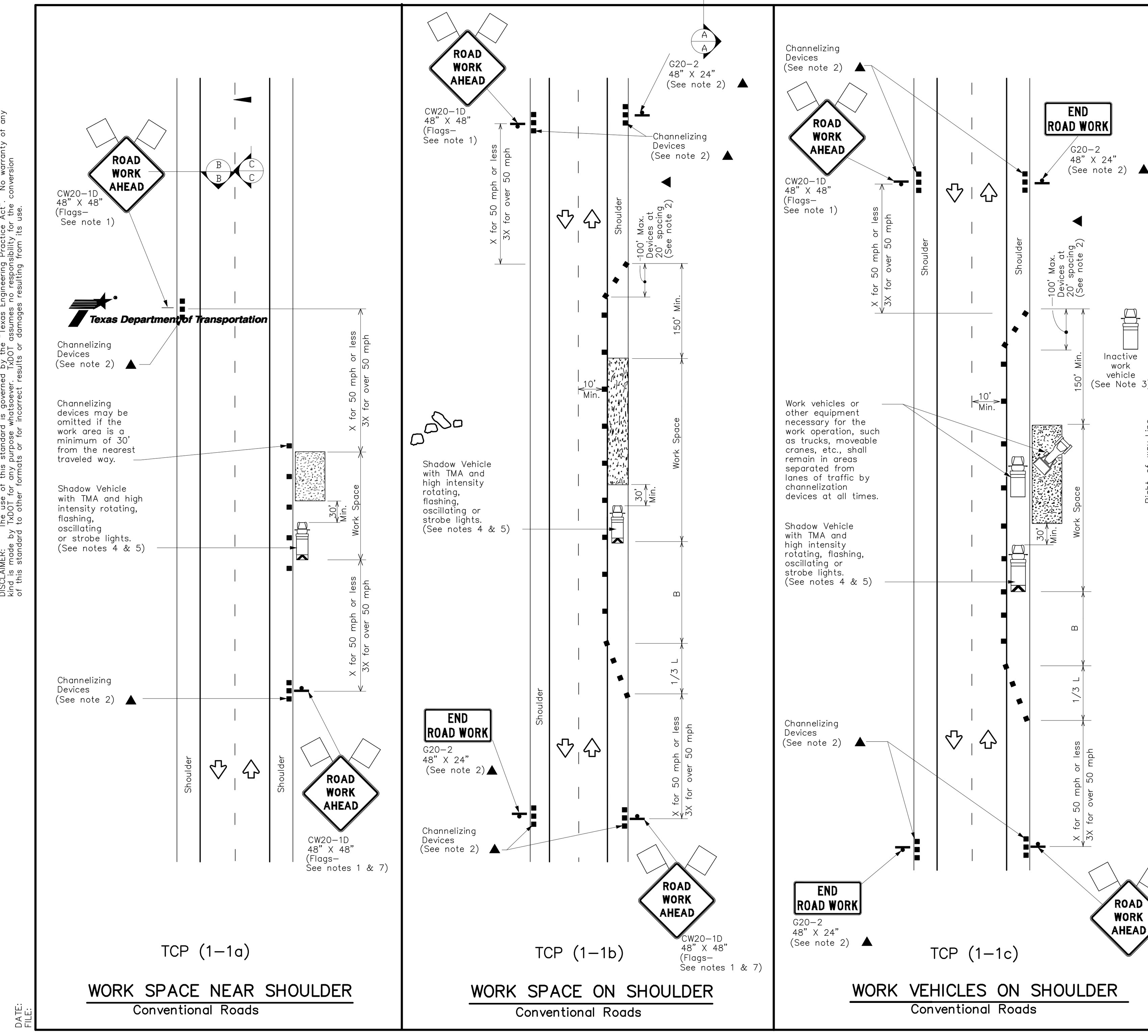

LEGEND

	Type 3 Barricade		Channelizing Devices
	Heavy Work Vehicle		Truck Mounted Attenuator (TMA)
	Trailer Mounted Flashing Arrow Board		Portable Changeable Message Sign (PCMS)
	Sign		Traffic Flow
	Flag		Flagger

Posted Speed *	Formula	Minimum Desirable Taper Lengths ** 10' Offset	11' Offset	12' Offset	Suggested Maximum Spacing of Channelizing Devices On a Taper	On a Tangent	Minimum Sign Spacing "X" Distance	Suggested Longitudinal Buffer Space "B"
30	$L=\frac{WS^2}{60}$	150'	165'	180'	30'	60'	120'	90'
35		205'	225'	245'	35'	70'	160'	120'
40		265'	295'	320'	40'	80'	240'	155'
45	L=WS	450'	495'	540'	45'	90'	320'	195'
50		500'	550'	600'	50'	100'	400'	240'
55		550'	605'	660'	55'	110'	500'	295'
60		600'	660'	720'	60'	120'	600'	350'
65		650'	715'	780'	65'	130'	700'	410'
70		700'	770'	840'	70'	140'	800'	475'
75		750'	825'	900'	75'	150'	900'	540'

* Conventional Roads Only
** Taper lengths have been rounded off.
L=Length of Taper(FT) W=Width of Offset(FT) S=Posted Speed(MPH)

TYPICAL USAGE

MOBILE	SHORT DURATION	SHORT TERM STATIONARY	INTERMEDIATE TERM STATIONARY	LONG TERM STATIONARY
	✓	✓		

GENERAL NOTES

1. Flags attached to signs where shown are REQUIRED.
2. All traffic control devices illustrated are REQUIRED, except those denoted with the triangle symbol may be omitted when stated elsewhere in the plans, or for routine maintenance work, when approved by the Engineer.
3. Inactive work vehicles or other equipment should be parked near the right-of-way line and not parked on the paved shoulder.
4. A Shadow Vehicle with a TMA should be used anytime it can be positioned 30 to 100 feet in advance of the area of crew exposure without adversely affecting the performance or quality of the work. If workers are no longer present but road or work conditions require the traffic control to remain in place, Type 3 Barricades or other channelizing devices may be substituted for the Shadow Vehicle and TMA.
5. Additional Shadow Vehicles with TMAs may be positioned off the paved surface, next to those shown in order to protect wider work spaces.
6. See TCP(5-1)for shoulder work on divided highways, expressways and freeways.
7. CW21-5 "SHOULDER WORK" signs may be used in place of CW20-1D "ROAD WORK AHEAD" signs for shoulder work on conventional roadways.

Texas Department of Transportation — Traffic Operations Division Standard

TRAFFIC CONTROL PLAN
CONVENTIONAL ROAD
SHOULDER WORK

TCP(1-1)-18

FILE: tcp1-1-18.dgn | DN: | CK: | DW: | CK:
©TxDOT December 1985 | CONT | SECT | JOB | HIGHWAY
REVISIONS 2-94 4-98 8-95 2-12 1-97 2-18 | DIST | COUNTY | SHEET NO.
151

DISCLAIMER: The use of this standard is governed by the "Texas Engineering Practice Act". No warranty of any kind is made by TxDOT for any purpose whatsoever. TxDOT assumes no responsibility for the conversion of this standard to other formats or for incorrect results or damages resulting from its use.

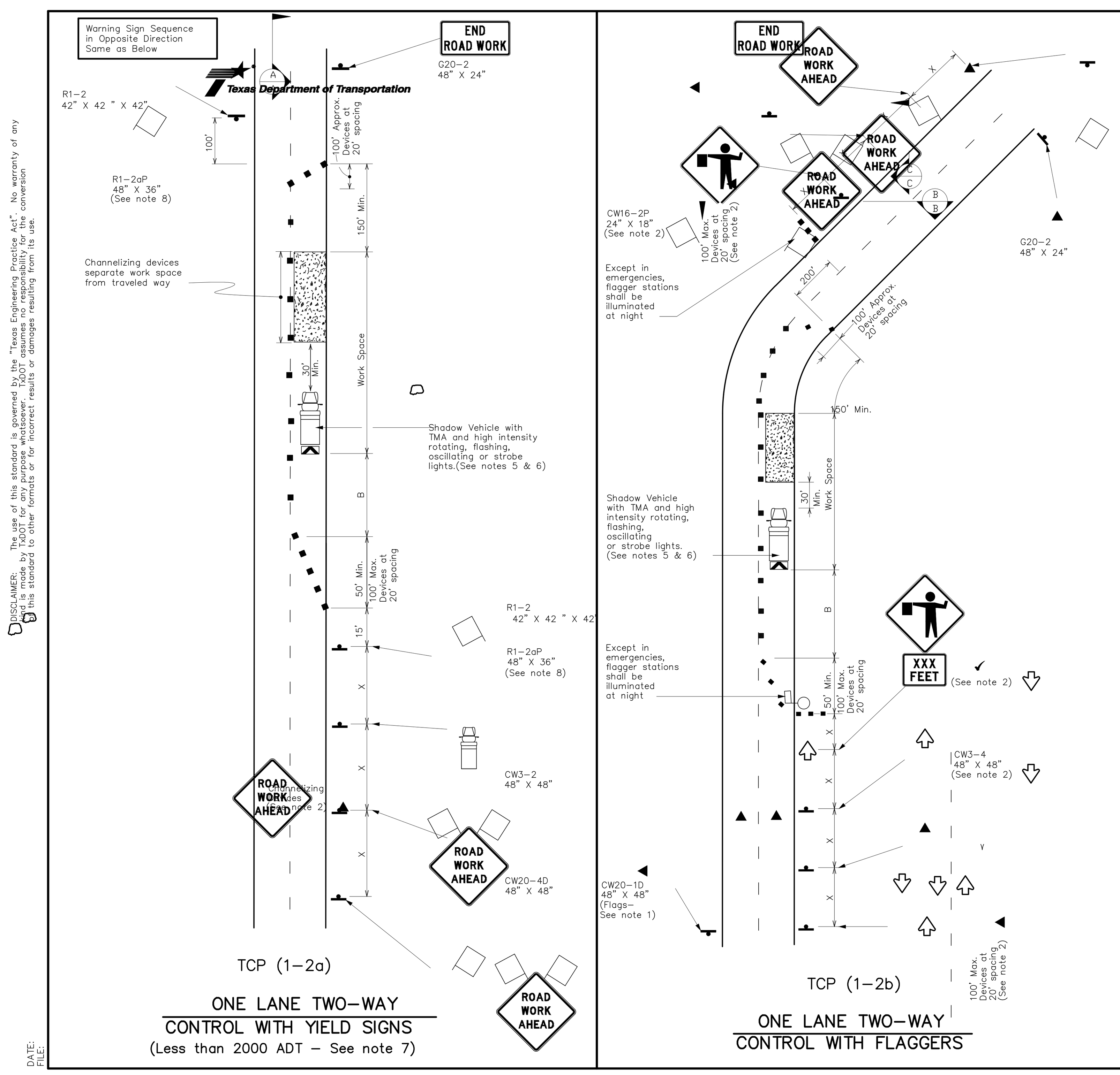

Posted Speed *	Formula	Minimum Desirable Taper Lengths ** 10' Offset	11' Offset	12' Offset	Suggested Maximum Spacing of Channelizing Devices On a Taper	On a Tangent	Minimum Sign Spacing "X" Distance	Suggested Longitudinal Buffer Space "B"	Stopping Sight Distance
30	$L=\frac{WS^2}{60}$	150'	165'	180'	30'	60'	120'	90'	200'
35		205'	225'	245'	35'	70'	160'	120'	250'
40		265'	295'	320'	40'	80'	240'	155'	305'
45	L=WS	450'	495'	540'	45'	90'	320'	195'	360'
50		500'	550'	600'	50'	100'	400'	240'	425'
55		550'	605'	660'	55'	110'	500'	295'	495'
60		600'	660'	720'	60'	120'	600'	350'	570'
65		650'	715'	780'	65'	130'	700'	410'	645'
70		700'	770'	840'	70'	140'	800'	475'	730'
75		750'	825'	900'	75'	150'	900'	540'	820'

* Conventional Roads Only
** Taper lengths have been rounded off.
L=Length of Taper(FT) W=Width of Offset(FT) S=Posted Speed(MPH)

TYPICAL USAGE

MOBILE	SHORT DURATION	SHORT TERM STATIONARY	INTERMEDIATE TERM STATIONARY	LONG TERM STATIONARY
		✓		

GENERAL NOTES

1. Flags attached to signs where shown are REQUIRED.
2. All traffic control devices illustrated are REQUIRED, except those denoted with the triangle symbol may be omitted when stated elsewhere in the plans, or for routine maintenance work, when approved by the Engineer.
3. The CW3-4 "BE PREPARED TO STOP" sign may be installed after the CW20-4D "ONE LANE ROAD AHEAD" sign, but proper sign spacing shall be maintained.
4. Sign spacing may be increased or an additional CW20-1D "ROAD WORK AHEAD" sign may be used if advance warning ahead of the flagger or R1-2 "YIELD" sign is less than 1500 feet.
5. A Shadow Vehicle with a TMA should be used anytime it can be positioned 30 to 100 feet in advance of the area of crew exposure without adversely affecting the performance or quality of the work. If workers are no longer present but road or work conditions require the traffic control to remain in place, Type 3 Barricades or other channelizing devices may be substituted for the Shadow Vehicle and TMA.
6. Additional Shadow Vehicles with TMAs may be positioned off the paved surface, next to those shown in order to protect wider work spaces.

TCP (1-2a)

7. R1-2 "YIELD" sign traffic control may be used on projects with approaches that have adequate sight distance. For projects in urban areas, work spaces should be no longer than one half city block. In rural areas on roadways with less than 2000 ADT, work spaces should be no longer than 400 feet.
8. R1-2 "YIELD" sign with R1-2aP "TO ONCOMING TRAFFIC" plaque shall be placed on a support at a 7 foot minimum mounting height.

TCP (1-2b)

9. Flaggers should use two-way radios or other methods of communication to control traffic.
10. Length of work space should be based on the ability of flaggers to communicate.
11. If the work space is located near a horizontal or vertical curve, the buffer distances should be increased in order to maintain adequate stopping sight distance to the flagger and a queue of stopped vehicles (see table above).
12. Channelizing devices on the center-line may be omitted when a pilot car is leading traffic and approved by the Engineer.
13. Flaggers should use 24" STOP/SLOW paddles to control traffic. Flags should be limited to emergency situations.

Texas Department of Transportation — Traffic Operations Division Standard

TRAFFIC CONTROL PLAN
ONE-LANE TWO-WAY
TRAFFIC CONTROL

TCP(1-2)-18

FILE: tcp1-2-18.dgn | DN: | CK: | DW: | CK:
©TxDOT December 1985 | CONT | SECT | JOB | HIGHWAY
REVISIONS 4-90 4-98 2-94 2-12 1-97 2-18 | DIST | COUNTY | SHEET NO.
152

REV	DESCRIPTION	DATE	APR
	Record Drawing		

DESIGNED BY: DAZ
REVIEWED BY: TMH
DRAWN BY: DAZ

BGE

BGE, INC.
1701 DIRECTORS BOULEVARD, SUITE 1000
AUSTIN, TX 78744
TBPE Registration No. F-1046
TEL: 512-879-0400 www.browngay.com

WILCO RANCH PHASE 3 SECTION 2
HUTTO, TEXAS

TXDOT DETAILS (3 OF 3)

SUBMITTAL DATE: 12-10-2020

STATE OF TEXAS
TIMOTHY M. HOLLAND
94848
LICENSED PROFESSIONAL ENGINEER
8/3/2021

SHEET
44 OF 44

G:\TXC\Projects\Ashton_Woods\8022-00-Wilco_Ranch_Ph3_Sec2\LD\01_CADD\01_Shts\C-SP-DETL-PH 3-SEC 2.dwg Layout: TxDOT DETAILS (3 OF 3) Plotted: 8/3/2021 8:44:26 AM

Final For Construction

7.2kv
14.4kv
Service

GREY FOX LOOP
GREY FOX LOOP
GREY FOX LOOP
BLACKBEAR DRIVE
ED SCHMIDT BLVD - CR 119

4-0 TPX
350 TPX

"B"
"C"

N. O. 3

3056396-
09755953

Existing
Overhead
Facilities

Please extend 1-2"
and 1-3" conduits from
previous phase

Designer Note
Conductor that runs parallel
with itself will need either
five feet of seperation or
be encased in red dyed concrete.

Please extend 1-2"
and 1-6" conduits from
previous phase

Please extend 1-3"
conduits from
previous phase

N

DESIGN CONCURRENCE

☐ APPROVED AS DESIGNED DATE: _____

☐ CHANGES AS REQUESTED DATE: _____

NAME: _____

TITLE: _____

CROSSING SLEEVE INFORMATIOM

ONCOR Conduit

1 IN.	REQUIRES	2 IN. SLEEVE
2 IN.	REQUIRES	4 IN. SLEEVE
3 IN.	REQUIRES	6 IN. SLEEVE
4 IN.	REQUIRES	6 IN. SLEEVE
6 IN.	REQUIRES	10 IN. SLEEVE

If crossing sleeves are to be installed place sleeves at all street crossing, and any other location where open trenching might be hindered.

ELECTRICAL FACILITIES LEGEND

- PEDESTAL
- HAND HOLE
- STREET LIGHT
- TRANSFORMER PAD
- SWITCHGEAR PAD
- PULL BOX
- EXISTING ONCOR POLE
- PROPOSED ONCOR POLE
- DOWNGUY
- OVERHEAD TRANSFORMER

PRIMARY CONDUIT	SIZE	SECONDARY CONDUIT
	1 IN.	
	2 IN.	
	3 IN	
	4 IN.	
	6 IN.	

EASEMENT LINE

SECONDARY CONDUCTOR

ONCOR ELECTRIC DELIVERY

DISTRIBUTION PROJECT MANAGEMENT AND DESIGN SERVICES

PROJ. NAME : Wilco Ranch, 3-3

LOCATION : Hutto, Texas

PROJ. MGR. : Justin Jacks

DESIGNER : Brent Sherman

W/R # : 3539682

PLOT SCALE : 1":50'

DATE: 07/27/21

Legend

- Abc Def Casing.Remarks Annotation
- Casing.Proposed Casing Route
- Casing.Proposed Casing Extent
- Main.Existing High Pressure Route
- Main.Existing Intermediate Pressure Route
- Main.Proposed Intermediate Pressure Route
- Abc Def Main Annotation.Proposed Annotation
- Service.Existing Intermediate Pressure Route
- Service.Proposed Intermediate Pressure Route
- Service Riser.Existing Location
- Cap.Existing Location
- Cap.Proposed Location
- Elbow.Proposed Location
- Excess Flow Valve.Proposed Location
- Flow Control Device.Proposed Tapping Tee Location
- Tee.Existing Location
- Tee.Proposed Location
- Valve.Proposed Non Critical Location - Open
- CP Anode.Proposed Location
- CP Test Station.Proposed Location
- Foreign Pipe.Existing Route
- Line Marker.Ball Location
- Line Marker.Sign Location

-Tie into existing 2" HDPE main along Gray Fox Loop
-Service stubs are 3/4" w/ EFVs
-All street crossing encased in PVC Sleeves
-All long side service stubs encased in 2" PVC Sleeves
-2" PE main will be installed in ROW and PUE along streets

OBSERVE CALLOUT NOTES FOR TIE IN

Atmos energy

GAS CONSTRUCTION PRINT

PROJECT NO.

SHEET 1 OF 1

DATE 01/21/2022

PROJECT MANAGER Yu, Jacky

100

PHONE

MAP #

© 2009 Atmos Energy

Maps, drawings and electronic data (products) are created for the internal purposes of Atmos Energy with on implication of suitability or fitness for the internal use of the recipient. Atmos Energy will make good faith efforts to provide products that are free from error, but does not warrant the accuracy or quality of such products. The locations shown are approximations and are not intended to show exact locations. Products provided to other parties by Atmos Energy are for the internal use of the recipient, and the recipient agrees not to duplicate or distribute the products or any portion of the products to third parties without the prior written permission of Atmos Energy. The recipient further agrees to hold harmless and indemnify Atmos Energy against all claims, costs, expenses and damages resulting from or predicated upon strict liability for personal injuries, death or property damage, on account of any defects in the property provided hereunder.

PROJECT NAME Wilco Ranch 3-2

CUSTOMER

ADDRESS

LOCATION

ADA Assistance

107 Meadow Woods, Kyle TX 78640 (512) 787-3687 Fax (866)268-1810
Email: robert@adaassistance.com Internet: www.adaassistance.com

DATE: May 18, 2022

TO: Cody Bass
Ashton Woods
10721 Research Blvd, B-210
Austin TX 78759

FROM: Robert Ronson, RAS #16 Robert Ronson

PROJECT: Wilco Ranch Phase 3 Sec 2
Blackbriar Dr, Gray Fox Loop
Hutto TX

Inspection performed: 5/17/2022

SUBJECT: INSPECTION COMPLETED – NO VIOLATIONS

We are pleased to inform you that the referenced project has been inspected and no non-compliant items were found so the project appears to be in substantial compliance with provisions of the Texas Government Code, Chapter 469. Specifically inspected were pedestrian elements within the scope of the referenced project that were constructed at the time of the inspection: The curb ramp crossings (shown in blue) at both intersections and sidewalks (shown in red) on both sides of Blackbriar from Ed Schmidt to Gray Fox and on Gray Fox along the detention pond, lot 48.

Please note, this determination does not address the requirements of the Americans with Disabilities Act (ADA), (P.L. 101-336), or any other state, local, or federal requirements. For information on the ADA, please contact the United States Department of Justice, Civil Rights Division at (202) 514-0301.

Also note, this project is understood to be under $50,000 in value and not subject to review and/or inspection under current state law, therefore this report is advisory in nature only and does not constitute a requirement under the Texas Architectural Barriers Act.

If you have any questions concerning the results of the inspection, or the requirements of the Architectural Barriers Act, or if you are not the owner of record for this facility, contact Robert Ronson at (512) 787-3687.

NOTE: *The review of documents as contract documents and field inspections by this accessibility specialist for the Texas Department of Licensing and Regulation (TDLR) is based on a best efforts endeavor following instruction and certification by TDLR. Plan review and inspection in no way warrants complete compliance with the Texas Accessibility Standards. The business, the professional, his employees, engineers, and client for whom the review or inspection is made agrees to hold harmless and indemnify this accessibility specialist from and against any liability arising from performance of the work.*

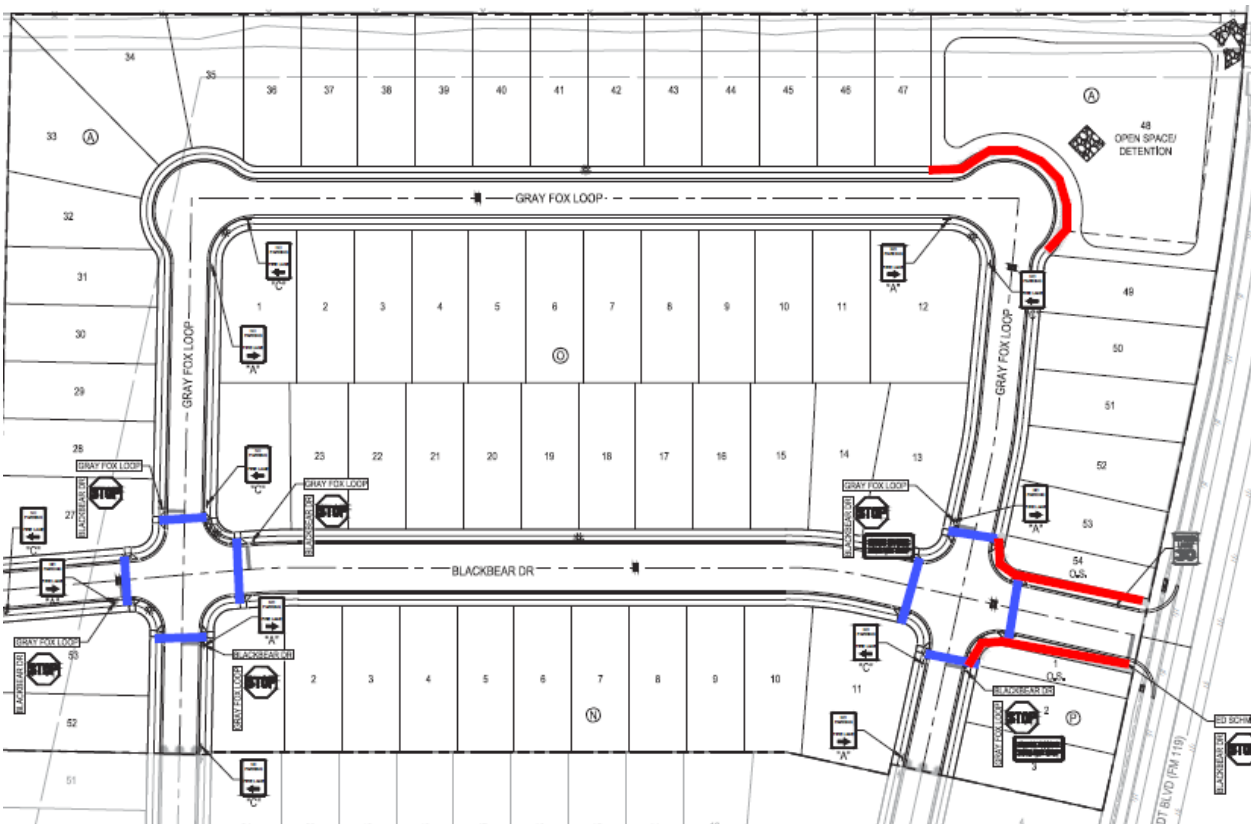

NOTE: *The review of documents as contract documents and field inspections by this accessibility specialist for the Texas Department of Licensing and Regulation (TDLR) is based on a best efforts endeavor following instruction and certification by TDLR. Plan review and inspection in no way warrants complete compliance with the Texas Accessibility Standards. The business, the professional, his employees, engineers, and client for whom the review or inspection is made agrees to hold harmless and indemnify this accessibility specialist from and against any liability arising from performance of the work.*

AGENDA ITEM REPORT
8.7.

To:	City Council
Subject:	Consideration and possible action on Resolution No. R-2022-058 approving the auction contract with Richie Brothers Auctioneers for the sale of street equipment. (Angie Rios)
Meeting:	Thursday, June 2, 2022
Department:	Finance /
Staff Contact:	

BACKGROUND INFORMATION:

The City Council previously approved a list of vehicles and equipment for auction. The street equipment that was purchased with bond funds is the only equipment remaining to be auctioned. Due to some of the equipment being specialty items, the staff spoke with several different companies to determine the best option to maximize our sale price. The following is the process that has been taken:

March 2022
Purchasing and Fleet staff meeting to discuss options - auction, trade-in, direct sale, etc.

April 2022
Gaston, an Austin area auction firm, came to photograph equipment and assess conditions.
ASCO, an Equipment Provider company, came out to evaluate the condition of Hutto's equipment.
Fleet manager spoke with Richie Brothers, a national auction firm, about how to sell in one of their auctions.

May 2022
Fleet manager sends list of items to sell in Richie Brothers auction
Richie Brothers is working on an estimate of the anticipated sales price.
Richie Brothers prepare and send quote to haul equipment to Houston for a mid-June auction
Staff Recommendation is to send to Richie Brothers auction - the highest expected selling amount
City Staff preparing agenda item for June 2 council meeting - auction contract with Richie Brothers

June 2022
June 2 - Expected agenda item for auction contract with Richie Brothers
June 21/22 Equipment transported and sold at national Richie Brothers auction

SUMMARY OF REQUEST:

AGENDA ITEM REPORT
8.7.

Staff recommends approval of the auction agreement with Richie Brothers Auctioneers.

STAFF REVIEW:

FINANCIAL IMPACT:

POLICY IMPLICATIONS:

ATTACHMENTS:

RESOLUTION NO. R-2022-___

A RESOLUTION OF THE CITY OF HUTTO, TEXAS, APPROVING A MULTI-CHANNEL SALES AGREEMENT BETWEEN THE CITY OF HUTTO AND RITCHIE BROS. AUCTIONEERS (AMERICA) INC. AND IRONPLANET, INC.; AUTHORIZING THE CITY MANAGER TO EXECUTE THE AGREEMENT; AND PROVIDING AN EFFECTIVE DATE

WHEREAS, the City Council desires to approve a Multi-Channel Sales Agreement between the City of Hutto and Ritchie Bros. Auctioneers (America) Inc. and Ironplanet, Inc., and authorize the City Manager to execute the Agreement (the "Agreement") attached as Exhibit "A."

NOW, THEREFORE, BE IT RESOLVED BY THE CITY COUNCIL OF THE CITY OF HUTTO, TEXAS, THAT:

SECTION 1: The findings set forth in the recitals of this Resolution are hereby found to be true and correct and are hereby adopted as findings of the City Council and are incorporated into the body of this Resolution as if fully set forth herein.

SECTION 2: The Hutto City Council hereby approves and authorizes the City Manager to execute the Multi-Channel Sales Agreement, attached as Exhibit "A", a copy of the same being attached hereto and incorporated herein for all purposes.

SECTION 3: The City Council hereby finds and declares that written notice of the date, hour, place, and subject of the meeting at which this Resolution was adopted was posted and that such meeting was open to the public as required by law at all times during which this Resolution and the subject matter hereof were discussed, considered and formally acted upon, all as required by the Open Meetings Act, Chapter 551, Texas Government Code, as amended.

RESOLVED this 2nd day of June, 2022.

_____
Mike Snyder, Mayor

ATTEST:

_____
Angela Walton, City Secretary

APPROVED AS TO FORM:

By:_____
Cristian Rosas-Grillet, Assistant City Attorney

EXHIBIT “A”

DocuSign Envelope ID: 4A159704-2854-498F-A103-0111BDF998C8

LEGAL NAME OF SELLER: City of Hutto	DATE: (DD/MM/YYYY)
JURISDICTION OF INCORPORATION/REGISTRATION:	SALES REP: Philip Berry

*This MULTI-CHANNEL SALES AGREEMENT (this "**Agreement**") is entered into as of the date first written above (the "**Effective Date**") by and between the applicable entity/entities set forth in the Terms and Conditions (as defined herein) ("**RB Group**") and the customer identified above (the "**Seller**") for the sale of Equipment through a Live Auction Event or the Marketplaces.*

1. SELLER INFORMATION	
Account Name Doing Business As Local Language Seller Name	City of Hutto
Seller Business Address	356 CR 199, Hutto, TX, United States of America, 78634
Authorized Representative	Mike Simons
Title of Authorized Representative	Authorized Signatory
Phone	1 (512) 971-2532
Fax	
Email	michael.simons@huttotx.gov

In Process

2. COMMERCIAL TERMS APPLICABLE TO LIVE AUCTION EVENT	
Equipment	The Seller authorizes RB Group to offer and sell the equipment listed on Schedule A ("**Schedule A Equipment**") at the Live Auction Event.
Delivery	The Seller will deliver each item of Schedule A Equipment, at the Seller's cost, to the corresponding location specified in Schedule A (each a "**Site**") no later than the delivery date, if applicable, also specified therein. The Seller may elect for RB Group to arrange for delivery of the Schedule A Equipment to the Site by indicating the same in Schedule A. If delivery by RB Group is elected, the Seller will be charged a delivery fee equal to the actual cost of delivery plus 10%.
Live Auction Event	RB Group will, as agent of the Seller, offer Schedule A Equipment, together with any additional items delivered by the Seller to the Site and received by RB Group, for sale at an RB Group scheduled unreserved public auction to be held on or about on the date(s) specified in Schedule A (the "Live Auction Event").
Titled Equipment	The Seller hereby appoints RB Group as its attorney-in-fact with a limited power of attorney ("**LPOA**") to execute on the Seller's behalf, all documents necessary and required to transfer title to, and permit registration of ownership of, any portion of the Schedule A Equipment to the buyer; provided, however, if original titles or a notarized LPOA are required by federal, state, provincial or local regulation to transfer title, the Seller will provide RB Group with either, as applicable, (i) signed original titles, or (ii) a notarized LPOA and unsigned original titles at least two weeks prior to the Live Auction Event. Failure to provide title(s) and/or an LPOA as required may prevent the Schedule A Equipment being made available for sale at the Live Auction Event until such documentation is provided.

3. COMMERCIAL TERMS APPLICABLE TO MARKETPLACE	
Equipment	RB Group will advertise for sale the equipment listed on Schedule B ("**Schedule B Equipment**", and collectively with Schedule A Equipment, the "**Equipment**") which the Seller desires to offer for sale through one or more of RB Group's online marketplaces (collectively, the "**Marketplaces**", and each a "**Marketplace**"), as indicated by the "Sale Type" selected by the Seller and noted on Schedule B.
Listing Fees	A Listing Fee will apply for each unit of Schedule B Equipment that the Seller lists on the Marketplaces.
Equipment Condition	The Seller agrees that the Schedule B Equipment will remain in the same or better condition as when previously inspected by RB Group. In the event of any unforeseen machine failure, the Seller agrees to

	make the necessary repairs to bring the Schedule B Equipment to the same condition as when inspected by RB Group.
Titled Equipment	The Seller hereby appoints RB Group as its attorney-in-fact with a limited power of attorney ("**LPOA**") to execute on the Seller's behalf, all documents necessary and required to transfer title to, and permit registration of ownership of, any portion of the Schedule B Equipment to the buyer; provided, however, if original titles or a notarized LPOA are required by federal, state, provincial or local regulation to transfer title, the Seller will provide RB Group with either, as applicable, (i) signed original titles, or (ii) a notarized LPOA and unsigned original titles at least two weeks prior to the time of listing. Failure to provide title(s) and/or an LPOA as required may prevent the Schedule B Equipment being made available for sale on the Marketplace(s) until such documentation is provided

4. GENERAL COMMERCIAL TERMS

Proceeds	Unless otherwise specified in writing, the Seller acknowledges that there is no guarantee whatsoever as to the gross proceeds to be realized from the sale of the Equipment.
Title Transfer Fees; Lien Search Fees	The Seller will pay lien search fees, title transfer fees and any other fee applicable as set out in the Terms & Conditions for each unit of Equipment, unless otherwise specified. RB Group will deduct such fees from any amounts owing to the Seller.
Commission Rate	RB Group will be entitled to a commission based on the gross sale price of each piece of Equipment as follows: (a) ~~**15.00 %**~~ **9.50 %** for any lot in excess of **USD 2,500.00;** and (b) **25.00 %** for any lot realizing **USD 2,500.00** or less, with a minimum fee of **USD 100.00** per lot. Seller Initials RB Group Initials In Process
Terms & Conditions	This Agreement incorporates by reference the terms and conditions located at https://www.rbauction.com/legal-policies/seller-terms-and-conditions(Terms and Conditions) in force as of the Effective Date ("**Terms and Conditions**"). By initialing here, the Seller acknowledges that (i) the Seller has received a copy of the Terms and Conditions with this Agreement, (ii) it is the Seller's responsibility to familiarize itself with the Terms and Conditions, and (iii) the Seller is bound by the Terms and Conditions. *Seller Initials*
Refurbishment	The Seller elects to have RB Group arrange for the welding, sandblasting, painting, cleaning, and other refurbishing (the "**Refurbishing**") of the Equipment to a standard acceptable to RB Group. : **NO** Should RB Group organize and pay for the Refurbishing of any part of the Equipment, RB Group will be reimbursed for these costs plus 10.00 % provided that the total cost will not exceed **USD0.00** without the Seller's consent.
Fuel/Batteries/Tire Repair Costs	The Seller will reimburse RB Group for the cost plus 10% of fuel, batteries and tire repair as RB Group deems necessary for the demonstration and sale of the Equipment, if applicable.

5. LIENS/ENCUMBRANCES

ARE THERE ANY LIENS ON THE EQUIPMENT?	**NO**
SELLER'S INTERNAL CONTACT REGARDING LIENS AND TITLES (*Name/Phone/Fax/Email*):	**Name:** Mike Simons **Phone:** 1 (512) 971-2532 **Fax:** **Email:** michael.simons@huttotx.gov

1. If "Yes," please provide information for each of the lien holders for blanket liens below and as requested in the applicable Schedule.
2. Unless otherwise disclosed herein, the undersigned, on behalf of the Seller, certifies that all Equipment is or will be free of all liens, charges, security interests, tax or duty obligations or other encumbrances ("**Encumbrances**") prior to being placed for sale in a Live Auction Event or on the Marketplace(s).
3. The Seller: (i) authorizes RB Group to conduct lien searches on the Equipment; (ii) authorizes RB Group to contact potential lien holders for the disclosure of Encumbrances and to obtain pay-off balances and releases; (iii) consents to the release to RB Group of any and all information pertaining to any such lien, charge, encumbrance or security interest; and (iv) assigns proceeds from the sale of the Equipment as may be required to discharge and satisfy all charges, liens, claims and encumbrances in respect of the Equipment.
4. For greater certainty, lien search fees will apply regardless of the Seller's response.

6. MISCELLANEOUS	
Entire Agreement; Priority	This Agreement, together with the Terms and Conditions, contains the entire agreement of the parties with respect to the subject matter hereof and supersedes all previous communications, representations, understandings and agreements, either oral or written, between the parties. In the event of a conflict between the provisions of this Agreement and the Terms and Conditions, this Agreement will control.
Counterparts	This Agreement may be executed in counterparts, each of which will be considered an original, but all of which together will constitute the same instrument. Execution and delivery of this Agreement may be evidenced by facsimile, PDF, electronic signature, or acknowledgement email and will hold the same force and effect as an original signature for purposes of binding the parties.
Term	This Agreement is valid only for the Equipment listed on Schedule A and Schedule B from the Effective Date until such Equipment is sold or withdrawn pursuant to the terms of this Agreement.
Currency and Payment	Unless otherwise stated in the Terms and Conditions, all prices noted in this Agreement are listed in the currency of the country in which the Equipment is located at the time such Equipment is offered for sale. The same currency will be used for invoice and payment.

IN WITNESS WHEREOF, the parties hereto have caused this Agreement to be executed by their duly authorized representatives as of the Effective Date, and each represents and warrants to the other that it has validly entered into this Agreement and has the legal power to do so.

SELLER: City of Hutto			
Name:	Mike Simons	Title:	Authorized Signatory
By (*Signature*):		Date Signed:	(dd/mm/yyyy)

RITCHIE BROS. AUCTIONEERS (AMERICA) INC.			
Name:	Philip Berry	Title:	Business Development Manager
By (*Signature*):		Date Signed:	(dd/mm/yyyy)

IRONPLANET, INC.			
Name:	Philip Berry	Title:	Business Development Manager
By (*Signature*):		Date Signed:	(dd/mm/yyyy)

SCHEDULE A TO AGREEMENT

EQUIPMENT FOR LIVE AUCTION EVENT

SELLER'S NAME: City of Hutto

#	Item Description – Manufacturer, Model, Serial Number, Description, Auction Event and Date, Delivery	Encumbrance Holder Company/Contact Name/Email Phone/Fax/Account (if none, state 'nil')	Amount Owing on Encumbrance
1	Year: 2019 Manufacturer: Case Model: 885B Description: 2019 Case 885B VHB AWD Motor Grader Machine Type: Motor Grader S/N: HBZN0885LHAF03413 Hrs/Mil: 293.0 Hours Auction Event and Date: Houston, TX, USA - Jun 21, 2022 Delivery Location: Houston - RB Yard Delivery Date: 6/6/2022 (dd/mm/yyyy)	Nil	
2	Year: 2019 Manufacturer: Case Model: SV208D Description: 2019 Case SV208D 66 in. Padfoot Drum Compactor Machine Type: Padfoot Drum Compactor S/N: DDDS208DNKWTA2208 Hrs/Mil: 31.0 Hours Auction Event and Date: Houston, TX, USA - Jun 21, 2022 Delivery Location: Houston - RB Yard Delivery Date: 10/5/2022 (dd/mm/yyyy)	Nil	
3	Year: 2019 Manufacturer: Case Model: SV280D Description: 2019 Case SV280D 66 in. Smooth Drum Compactor Machine Type: Smooth Drum Compactor S/N: DDDS208DNKWTA2203 Hrs/Mil: 95.0 Hours Auction Event and Date: Houston, TX, USA - Jun 21, 2022 Delivery Location: Houston - RB Yard Delivery Date: 10/5/2022 (dd/mm/yyyy)	Nil	
4	Year: 2019 Manufacturer: Case Model: CX130D Description: 2019 Case CX130D Tracked Excavator Machine Type: Tracked Excavator S/N: DAC130K7NKS7D1551 Hrs/Mil: 49.0 Hours Auction Event and Date: Houston, TX, USA - Jun 21, 2022 Delivery Location: Houston - RB Yard Delivery Date: 10/5/2022 (dd/mm/yyyy)	Nil	

In Process

Seller	RBGroup

5	Year: 2019 Manufacturer: International Model: 7600 Description: 2019 International 7600 T/A Dump Truck Machine Type: T/A Dump Truck S/N: 3HTEKTAR8MN143096 Hrs/Mil: 4434.0 Miles Auction Event and Date: Houston, TX, USA - Jun 21, 2022 Delivery Location: Houston - RB Yard Delivery Date: 10/5/2022 (dd/mm/yyyy)	Nil	
6	Year: 2019 Manufacturer: International Model: 7600 Description: 2019 International 7600 T/A Dump Truck Machine Type: T/A Dump Truck S/N: 3HTEKTARXMN143097 Hrs/Mil: 4043.0 Miles Auction Event and Date: Houston, TX, USA - Jun 21, 2022 Delivery Location: Houston - RB Yard Delivery Date: 10/5/2022 (dd/mm/yyyy)	Nil	
7	Year: 2019 Manufacturer: International Model: 7600 Description: 2019 International 7600 T/A Dump Truck Machine Type: T/A Dump Truck S/N: 3HTEKTAR6MN143095 Hrs/Mil: 4339.0 Miles Auction Event and Date: Houston, TX, USA - Jun 21, 2022 Delivery Location: Houston - RB Yard Delivery Date: 10/5/2022 (dd/mm/yyyy)	Nil	
8	Manufacturer: Atlas Copco Model: V4 Description: Atlas Copco V4 APT LT Light Tower Machine Type: Light Tower S/N: WJE019883JW916819 Auction Event and Date: Houston, TX, USA - Jun 21, 2022 Delivery Location: Houston - RB Yard Delivery Date: 10/5/2022 (dd/mm/yyyy)	Nil	
9	Manufacturer: Atlas Copco Model: V4 Description: Atlas Copco V4 APT LT Light Tower Machine Type: Light Tower S/N: WJE019880JW916826 Auction Event and Date: Houston, TX, USA - Jun 21, 2022 Delivery Location: Houston - RB Yard Delivery Date: 10/5/2022 (dd/mm/yyyy)	Nil	
10	Manufacturer: Atlas Copco Model: V4 Description: Atlas Copco V4 APT LT Light Tower Machine Type: Light Tower S/N: WJE019885JW916823 Auction Event and Date: Houston, TX, USA - Jun 21, 2022 Delivery Location: Houston - RB Yard Delivery Date: 10/5/2022 (dd/mm/yyyy)	Nil	

In Process

Seller RBGroup

11	Manufacturer: Atlas Copco Model: V4 Description: Atlas Copco V4 APT LT Light Tower Machine Type: Light Tower S/N: WJE019881JW916821 Auction Event and Date: Houston, TX, USA - Jun 21, 2022 Delivery Location: Houston - RB Yard Delivery Date: 10/5/2022 (dd/mm/yyyy)	Nil	
12	Manufacturer: Atlas Copco Model: V4 Description: Atlas Copco V4 APT LT Light Tower Machine Type: Light Tower S/N: WJE019886JW916829 Auction Event and Date: Houston, TX, USA - Jun 21, 2022 Delivery Location: Houston - RB Yard Delivery Date: 10/5/2022 (dd/mm/yyyy)	Nil	
13	Manufacturer: Atlas Copco Model: V4 Description: Atlas Copco V4 APT LT Light Tower Machine Type: Light Tower S/N: WJE019882JW916830 Auction Event and Date: Houston, TX, USA - Jun 21, 2022 Delivery Location: Houston - RB Yard Delivery Date: 10/5/2022 (dd/mm/yyyy)	Nil	

In Process

Legend	
PoR	Price on Request

Seller	RBGroup

SCHEDULE B TO AGREEMENT

EQUIPMENT FOR ONLINE MARKETPLACE SALE

SELLER'S NAME: City of Hutto

Note – Currently there are no assets scheduled to be sold through Marketplace

In Process

Seller	RBGroup

AGENDA ITEM REPORT
8.8.

To:	City Council
Subject:	Consideration and possible action on Resolution No. R-2022-059 accepting ROW Donation of approximately 0.2743-acre tract or parcel of land in the E. Thomason Survey, Abstract No. 844, and the W.J. Brown Survey, Abstract No. 105, located in Williamson County, Texas, from MA Durango Farms, LLC. (Legal)
Meeting:	Thursday, June 2, 2022
Department:	Legal /
Staff Contact:	

BACKGROUND INFORMATION:

The City of Hutto and TxDOT require improvements to the intersection of FM 1660 and Mager Lane as condition of final acceptance of the Durango Farms development. The developer has designed and will construct improvements to FM 1660 that include signal modifications, right turn lanes and new wide sidewalk (shared use path). In order to accommodate all of the project elements, a portion of the existing sidewalk on FM 1660 will be relocated outside the existing TxDOT right-of-way. The developer is donating right-of-way to the City of Hutto to accommodate construction of the proposed sidewalk.

The developer is funding the construction of the improvements. TxDOT will oversee bidding and construction and will own and operate the new facilities within TxDOT right-of-way. The City will maintain the portion of the new sidewalk located within City right-of-way, consistent with the existing FM 1660 maintenance agreement between TxDOT and the City of Hutto.

SUMMARY OF REQUEST:

Acceptance of right-of-way donation associated with improvements to FM 1660 at Mager Lane.

STAFF REVIEW:

Staff have coordinated extensively with the developer and TxDOT regarding the limits and scope of the proposed right-of-way dedication.

FINANCIAL IMPACT:

POLICY IMPLICATIONS:

AGENDA ITEM REPORT
8.8.

ATTACHMENTS:

RESOLUTION NO. R-2022-___

A RESOLUTION OF THE CITY OF HUTTO, TEXAS, ACCEPTING ROW DONATION OF APPROXIMATELY 0.2743-ACRE [11,949 SQUARE FEET] TRACT OR PARCEL OF LAND IN THE E. THOMASON SURVEY, ABSTRACT NO. 844, AND THE W.J. BROWN SURVEY, ABSTRACT NO. 105, LOCATED IN WILLIAMSON COUNTY, TEXAS, FROM MA DURANGO FARMS, LLC; AND PROVIDING AN EFFECTIVE DATE

WHEREAS, the City Council desires to accept the ROW Donation of approximately 0.2743-acre [11,949 square feet] tract or parcel of land in the E. Thomason Survey, Abstract No. 844, and the W.J. Brown Survey, Abstract No. 105, located in Williamson County, Texas, from MA Durango Farms, LLC (the "Donation") attached as Exhibit "A."

NOW, THEREFORE, BE IT RESOLVED BY THE CITY COUNCIL OF THE CITY OF HUTTO, TEXAS, THAT:

SECTION 1: The findings set forth in the recitals of this Resolution are hereby found to be true and correct and are hereby adopted as findings of the City Council and are incorporated into the body of this Resolution as if fully set forth herein.

SECTION 2: The Hutto City Council hereby accepts the donation, attached as Exhibit "A", a copy of the same being attached hereto and incorporated herein for all purposes.

SECTION 3: The City Council hereby finds and declares that written notice of the date, hour, place, and subject of the meeting at which this Resolution was adopted was posted and that such meeting was open to the public as required by law at all times during which this Resolution and the subject matter hereof were discussed, considered and formally acted upon, all as required by the Open Meetings Act, Chapter 551, Texas Government Code, as amended.

RESOLVED this 2nd day of June, 2022.

_____
Mike Snyder, Mayor

ATTEST:

_____
Angela Walton, City Secretary

APPROVED AS TO FORM:

By:_____
Cristian Rosas-Grillet, Assistant City Attorney

EXHIBIT “A”

Notice of Confidentiality Rights: If you are a natural person, you may remove or strike any of the following information from this instrument before it is filed for record in the public records: your Social Security Number or your Driver's License Number.

ROW DONATION DEED

Grantor(s), whether one or more:

MA Durango Farms, LLC, a Texas limited liability company, by and through its Manager,
MA Partners, LLC, a Texas limited liability company

Grantor's Mailing Address (including county):

15443 Knoll Trail Drive, Suite 130
Dallas, Dallas County, Texas 75248

Grantee:

City of Hutto, a Texas home-rule municipal corporation situated in Williamson County

Grantee's Mailing Address (including county):

500 West Live Oak Street
Hutto, Williamson County, Texas 78634

Consideration:

The sum of One and no/100 Dollars ($1.00) to Grantor in hand paid by Grantee, receipt of which is hereby acknowledged, and for which no lien is retained, either expressed or implied.

Property:

Being 0.2743-acre [11,949 square feet] tract or parcel of land in the E. Thomason Survey, Abstract No. 844, and the W.J. Brown Survey, Abstract No. 105, located in Williamson County, Texas, and being more particularly described in the attached Exhibit A (the "**Property**").

Reservations from and Exceptions to Conveyance and Warranty:

This conveyance is made by Grantor and accepted by Grantee subject to the following:

1. Visible and apparent easements not appearing of record.

2. Any discrepancies, conflicts, or shortages in area or boundary lines or any encroachments or any overlapping of improvements which a current survey would show.

3. Easements, restrictions, reservations, covenants, conditions, oil and gas leases, mineral severances, and encumbrances for taxes and assessments (other than liens and conveyances) presently of record in the Official Public Records of Williamson County, Texas, that affect the property, but only to the extent that said items are still valid and in force and effect at this time.

Grantor reserves all of the oil, gas, sulfur in and under the Property but waives all rights of ingress and egress to the surface thereof for the purpose of exploring, developing, mining or drilling for same; however, nothing in this reservation shall affect the title and rights of the Grantee, its successors and assigns, to take and use all other minerals and materials thereon, therein and thereunder.

Grantor is retaining title to the following improvements ("**Retained Improvements**") located on the Property, to wit: **None**

Grantor covenants and agrees to remove the Retained Improvements from the Property by **N/A** day of **N/A**, **N/A**, subject to such extensions of time as may be granted by Grantee in writing. In the event Grantor fails, for any reason, to remove the Retained Improvements within the time prescribed, then, without further consideration, title to all or part of such Retained Improvements not so removed shall pass to and vest in Grantee, its successors and assigns, forever.

Access on and off Grantor's remaining property to and from the highway facility shall be permitted except to the extent that such access is expressly prohibited by the provisions set out in Exhibit "A". Grantor acknowledges that such access on and off the highway facility is subject to regulation as may be determined by the City of Hutto to be necessary in the interest of public safety or by applicable local municipal or county zoning, platting or permitting requirements.

GRANTOR, for the Consideration and subject to the Reservations from Conveyance and the Exceptions to Conveyance and Warranty, grants, sells and conveys to Grantee the Property, together with all and singular the rights and appurtenances thereto in anywise belonging, to have and to hold it to Grantee and Grantee's successors and assigns forever. Grantor binds Grantor and Grantor's heirs, successors and assigns to Warrant and Forever Defend all and singular the Property to Grantee and Grantee's successors and assigns against every person whomsoever lawfully claiming or to the claim the same or any part thereof, except as to the Reservations from Conveyance and the Exceptions to Conveyance and Warranty.

EXECUTED on the date(s) of acknowledgement indicated below.

GRANTOR:

MA Durango Farms, LLC, a Texas limited liability company

By: **MA Partners, LLC,** a Texas limited liability company, its Manager

_____

Wyatt Henderson, Manager

Acknowledgment

State of Texas
County of _____

This instrument was acknowledged before me on _____ day of _____, 20____, by **Wyatt Henderson, Manager of MA Partners, LLC,** a Texas limited liability company, as Manager of **MA Durango Farms, LLC,** a Texas limited liability company, for and on behalf of said limited liability company. The acknowledging person(s) personally appeared by:

- ☐ physically appearing before me.
- ☐ appearing by an interactive two-way audio and video communication that meets the requirements for online notarization under Texas Government Code chapter 406, subchapter C.

[Notary Seal]

_____
Notary Public in and for the State of Texas

_____
Printed Name of Notary Public

My commission expires: _____

EXHIBIT A

FIELD NOTES DESCRIPTION

DESCRIPTION OF 0.2743 OF ONE ACRE OF LAND IN THE E. THOMASON SURVEY, ABSTRACT NO. 844, AND THE W.J. BROWN SURVEY, ABSTRACT NO. 105, WILLIAMSON COUNTY, TEXAS; BEING A PORTION OF LOT 24, BLOCK H, DURANGO FARMS PHASE 1, A SUBDIVISION ACCORDING TO THE PLAT OR MAP OF RECORD IN DOCUMENT NO. 2020131845, OFFICIAL PUBLIC RECORDS OF WILLIAMSON COUNTY, TEXAS, A PORTION OF LOT 26, BLOCK H, SAID DURANGO FARMS PHASE 1, AND A PORTION OF LOT 27A, BLOCK H, RESUBDIVISION OF PORTIONS OF MAGER LANE, DURANGO DOWNS DRIVE AND EAST STREET AND LOT 1, BLOCK A, LOT 31, BLOCK C, LOT 1, BLOCK D, AND LOTS 1 THRU 9 AND LOTS 38 THRU 40, BLOCK G, DURANGO FARMS PHASE 1, A SUBDIVISION ACCORDING TO THE PLAT OR MAP OF RECORD IN DOCUMENT NO. 2021112761, OFFICIAL PUBLIC RECORDS OF WILLIAMSON COUNTY, TEXAS; SAID 0.2473 OF ONE ACRE, ALSO BEING A PORTION OF THAT CERTAIN CALLED 94.560 ACRE TRACT OF LAND DESIGNATED AS TRACT 1 AND DESCRIBED IN THE WARRANTY DEED TO MA DURANGO FARMS, LLC OF RECORD IN DOCUMENT NO. 2020097807, OFFICIAL PUBLIC RECORDS OF WILLIAMSON COUNTY, TEXAS; SAID 0.2743 OF ONE ACRE OF LAND, BEING COMPRISED OF PARCEL 1 (0.0006 ACRE), PARCEL 3 (0.1243 ACRE), AND PARCEL 5 (0.1494 ACRE) AS SURVEYED BY LANDDEV CONSULTING, LLC, AND SHOWN ON THE ACCOMPANYING SKETCH, BEING MORE PARTICULARLY DESCRIBED BY METES AND BOUNDS AS FOLLOWS:

PARCEL 1 – 0.0006 Acre (26 square feet)

BEGINNING at a ½-inch iron rod with a plastic cap stamped "LANDDEV" set in the west right-of-way line of F.M. 1660, a variable-width right-of-way, for the north right-of-way line of Mager Lane, a variable-width right-of-way, as shown on the said Resubdivision plat, for the southeast corner of said Lot 27A, Block H, said Resubdivision, for the southeast corner and **POINT OF BEGINNING** of the tract described herein, from which a ½-inch iron rod with a plastic cap stamped "LANDDEV" set in the west right-of-way line of said F.M. 1660, for the south right-of-way line of said Mager Lane, and the northeast corner of Lot 2A, Block A, said Resubdivision bears S 07°43'22" W, a distance of 52.01 feet;

THENCE N 83°30'17" W, with the north right-of-way line of said Mager Lane, with the south line of said Lot 27A, Block H, said Resubdivision, with the south line of the tract described herein, a distance of 25.63 feet to a ½-inch iron rod with a plastic cap stamped "LANDDEV" set for the southwest corner of the tract described herein;

THENCE N 13°39'43" E, leaving the north right-of-way line of said Mager Lane, crossing said Lot 27A, Block H, said Resubdivision, with the west line of the tract described herein, a distance of 1.01 feet to a ½-inch iron rod with a plastic cap stamped "LANDDEV" set in the north line of said Lot 27A, Block H, said Resubdivision, and the south line of Lot 25, Block H, said Durango Farms Phase 1, for the northwest corner of the tract described herein, from which a ½-inch iron rod with a plastic cap stamped "LANDDEV" set for a point-of-curvature in the north line of said Lot 27A, Block H, said Resubdivision, and the south line of said Lot 25, Block H, Durango Farms Phase 1 bears N 83°30'17" W, a distance of 96.55 feet;

THENCE S 83°30'17" E, with the north line of said Lot 27A, Block H, said Resubdivision, with the south line of said Lot 25, Block H, Durango Farms Phase 1, with the north line of the tract described herein, a distance of 25.53 feet to a ½-inch iron rod with a plastic cap stamped "LANDDEV" set in the west right-of-way line of said F.M. 1660 for the northeast corner of said Lot 27A, Block H, said Resubdivision, and the southeast corner of said Lot 25, Block H, Durango Farms Phase 1, for the northeast corner of the tract described herein, from which a Texas Department of Transportation (TxDOT) Type I concrete right-of-way marker found at a point of curvature in the west right-of-way line of said F.M. 1660 and the east line of Lot 24, Block H, said Durango Farms Phase 1 bears N 07°51'42" E, a distance of 773.65 feet;

THENCE S 07°51'42" W, with the west right-of-way line of said F.M. 1660, with the east line of said Lot 27A, Block H, said Resubdivision, with the east line of the tract described herein, a distance of 1.00 feet to **POINT OF BEGINNING** and containing 0.0006 of one acre (26 square feet) of land.

PARCEL 3 – 0.1243 Acre (5,413 square feet)

COMMENCING at a ½-inch iron rod with a plastic cap stamped "LANDDEV" set in the west right-of-way line of F.M. 1660, a variable-width right-of-way, for the north right-of-way line of Mager Lane, a variable-width right-of-way, as shown on the Resubdivision of Portions of Mager Lane, Durango Downs Drive and East Street and Lot 1, Block A, Lot 31, Block C, Lot 1, Block D, and Lots 1 thru 9 and Lots 38 thru 40, Block G, Durango Farms Phase 1, a subdivision according to the plat or map of record in Document No. 2021112761, Official Public Records of Williamson County, Texas, for the southeast corner of Lot 27A, Block H, said Resubdivision, from which a ½-inch iron rod with a plastic cap stamped "LANDDEV" set in the west right-of-way line of said F.M. 1660, for the south right-of-way line of said Mager Lane, and the northeast corner of Lot 2A, Block A, said Resubdivision bears S 07°43'22" W, a distance of 52.01 feet;

EXHIBIT A

THENCE N 07°51'42" E, with the west right-of-way line of said F.M. 1660, with the east line of said Lot 27A, Block H, said Resubdivision, , with the east line of Lot 25, Block H, said Durango Farms Phase 1, a distance of 134.27 feet to a ½-inch iron rod with a plastic cap stamped "LANDDEV" set for the southeast corner of said Lot 26, Block H, Durango Farms Phase 1, same being a northeast corner of said Lot 25, Block H, Durango Farms Phase 1, for the southeast corner and **POINT OF BEGINNING** of the tract described herein;

THENCE S 83°29'02" W, leaving the west right of way line of said F.M. 1660, with the south line of said Lot 26, Block H, Durango Farms Phase 1, with an interior north line of said Lot 25, Block H, Durango Farms Phase 1, with the south line of the tract described herein, a distance of 19.61 feet to a ½-inch iron rod with a plastic cap stamped "LANDDEV" set for the southwest corner of the tract described herein, from which a ½-inch iron rod with a plastic cap stamped "LANDDEV" set for a re-entrant corner of said Lot 25, Block H, Durango Farms Phase 1, same being the southwest corner of said Lot 26, Block H, Durango Farms Phase 1 bears S 83°29'02" W, a distance of 153.81 feet;

THENCE N 07°51'42" E, leaving a north line of said Lot 25, Block H, Durango Farms Phase 1, crossing said Lot 26, Block H, Durango Farms Phase 1, with the west line of the tract described herein, a distance of 287.35 feet to a ½-inch iron rod with a plastic cap stamped "LANDDEV" set in a south line of said Lot 25, Block H, Durango Farms Phase 1, same being the north line of said Lot 26, Block H, Durango Farms Phase 1, for the northwest corner of the tract described herein, from which a ½-inch iron rod with a plastic cap stamped "LANDDEV" set for a re-entrant corner of said Lot 25, Block H, Durango Farms Phase 1, same being the northwest corner of said Lot 26, Block H, Durango Farms Phase 1 bears N 82°08'02" W, a distance of 148.97 feet;

THENCE S 82°08'02" E, with a south line of said Lot 25, Block H, Durango Farms Phase 1, with the north line of said Lot 26, Block H, Durango Farms Phase 1, with the north line of the tract described herein, a distance of 19.00 feet to a ½-inch iron rod with a plastic cap stamped "LANDDEV" set in the west right-of-way line of said F.M. 1660, for a southeast corner of said Lot 25, Block H, Durango Farms Phase 1, same being the northeast corner of said Lot 26, Block H, Durango Farms Phase 1, for the northeast corner of the tract described herein, from which a Texas Department of Transportation (TxDOT) Type I concrete right-of-way marker found at a point of curvature in the west right-of-way line of said F.M. 1660 and the east line of Lot 24, Block H, said Durango Farms Phase 1 bears N 07°51'42" E, a distance of 357.90 feet;

THENCE S 07°51'42" W, with the west right-of-way line of said F.M. 1660 and the east line of said Lot 26, Block H, Durango Farms Phase 1, with the east line of the tract described herein, a distance of 282.48 feet to the **POINT OF BEGINNING** and containing 0.1243 of one acre (5,413 square feet) of land.

PARCEL 5 – 0.1494 Acre (6,509 square feet)

COMMENCING at a ½-inch iron rod with a plastic cap stamped "LANDDEV" set in the west right-of-way line of F.M. 1660, a variable-width right-of-way, for the north right-of-way line of Mager Lane, a variable-width right-of-way, as shown on the Resubdivision of Portions of Mager Lane, Durango Downs Drive and East Street and Lot 1, Block A, Lot 31, Block C, Lot 1, Block D, and Lots 1 thru 9 and Lots 38 thru 40, Block G, Durango Farms Phase 1, a subdivision according to the plat or map of record in Document No. 2021112761, Official Public Records of Williamson County, Texas, for the southeast corner of Lot 27A, Block H, said Resubdivision, from which a ½-inch iron rod with a plastic cap stamped "LANDDEV" set in the west right-of-way line of said F.M. 1660, for the south right-of-way line of said Mager Lane, and the northeast corner of Lot 2A, Block A, said Resubdivision bears S 07°43'22" W, a distance of 52.01 feet;

THENCE N 07°51'42" E, with the west right-of-way line of said F.M. 1660, with the east line of said Lot 27A, Block H, said Resubdivision, with the east line of Lot 25, Block H, said Durango Farms Phase 1, with the east line of Lot 26, Block H, said Durango Farms Phase 1, a distance of 491.75 feet to a ½-inch iron rod with a plastic cap stamped "LANDDEV" set for the southeast corner of said Lot 24, Block H, said Durango Farms Phase 1, same being a northeast corner of said Lot 25, Block H, Durango Farms Phase 1, for the southeast corner and **POINT OF BEGINNING** of the tract described herein;

THENCE N 82°08'02" W, leaving the west right of way line of said F.M. 1660, with the south line of said Lot 24, Block H, Durango Farms Phase 1, with an interior north line of said Lot 25, Block H, Durango Farms Phase 1, with the south line of the tract described herein, a distance of 19.00 feet to a ½-inch iron rod with a plastic cap stamped "LANDDEV" set for the southwest corner of the tract described herein, from which a ½-inch iron rod with a plastic cap stamped "LANDDEV" set for a re-entrant corner of said Lot 25, Block H, Durango Farms Phase 1, same being the southwest corner of said Lot 24, Block H, Durango Farms Phase 1 bears N 82°08'02" W, a distance of 148.96 feet;

THENCE leaving a north line of said Lot 25, Block H, Durango Farms Phase 1, crossing said Lot 24, Block H, Durango Farms Phase 1, with the west and north line of the tract described herein, the following four (4) courses and distances:

1. N 07°51'42" E, a distance of 105.71 feet to a ½-inch iron rod with a plastic cap stamped "LANDDEV" set for an angle point,

EXHIBIT A

2. N 07°53'33" E, a distance of 113.12 feet to a ½-inch iron rod with a plastic cap stamped "LANDDEV" set for an angle point,

3. N 10°32'03" E, a distance of 172.84 feet to a ½-inch iron rod with a plastic cap stamped "LANDDEV" set for the northwest corner of the tract described herein, and

4. S 88°04'08" E, a distance of 5.00 feet to a ½-inch iron rod with a plastic cap stamped "LANDDEV" set in the curving west right-of-way line of said F.M. 1660, and the east line of said Lot 24, Block H, Durango Farms Phase 1, for the northeast corner of the tract described herein, from which a Texas Department of Transportation (TxDOT) Type I concrete right-of-way marker found at a point of curvature in the west right-of-way line of said F.M. 1660 and the east line of said Lot 24, Block H, Durango Farms Phase 1 bears with the arc of a curve to the left, having a radius of 1,106.28 feet, an arc distance of 226.67 feet, and a chord which bears N 03°56'19" W, a distance of 226.28 feet;

THENCE with the west right-of-way line of said F.M. 1660 and the east line of said Lot 24, Block H, Durango Farms Phase 1, with the east line of the tract described herein, the following two (2) courses and distances:

1. With the arc of a curve to the right, having a radius of 1,106.28 feet, an arc distance of 109.31 feet, and a chord which bears S 04°45'42" W, a distance of 109.26 feet to a Texas Department of Transportation (TxDOT) Type I concrete right-of-way marker found at a point of tangency, and

2. S 07°51'42" W, a distance of 282.90 feet to the **POINT OF BEGINNING** and containing 0.1494 of one acre (6,509 square feet) of land.

FOR A TOTAL AREA OF 0.2743 OF ONE ACRE BEING ALL OF PARCEL 1, PARCEL 3, AND PARCEL 5 DESCRIBED HEREIN.

BEARING BASIS: Texas Coordinate System, Central Zone, NAD83, Grid.

THE STATE OF TEXAS

KNOW ALL MEN BY THESE PRESENTS:

COUNTY OF TRAVIS

That I, Ernesto Navarrete, a Registered Professional Land Surveyor, do hereby certify that the above description is true and correct to the best of my knowledge and belief and that the parcel of land described herein is based upon a survey performed upon the ground under my direct supervision during the month of July, 2021.

WITNESS MY HAND AND SEAL at Austin, Travis County, Texas, this 21st day of January 2022 A.D.

LANDDEV CONSULTING, LLC
5508 Highway 290 West, Suite 150
Austin, Texas 78735

Ernesto Navarrete
Registered Professional Land Surveyor
No. 6642 – State of Texas

STATE OF TEXAS
REGISTERED
ERNESTO NAVARRETE
6642
PROFESSIONAL
LAND SURVEYOR

EXHIBIT A

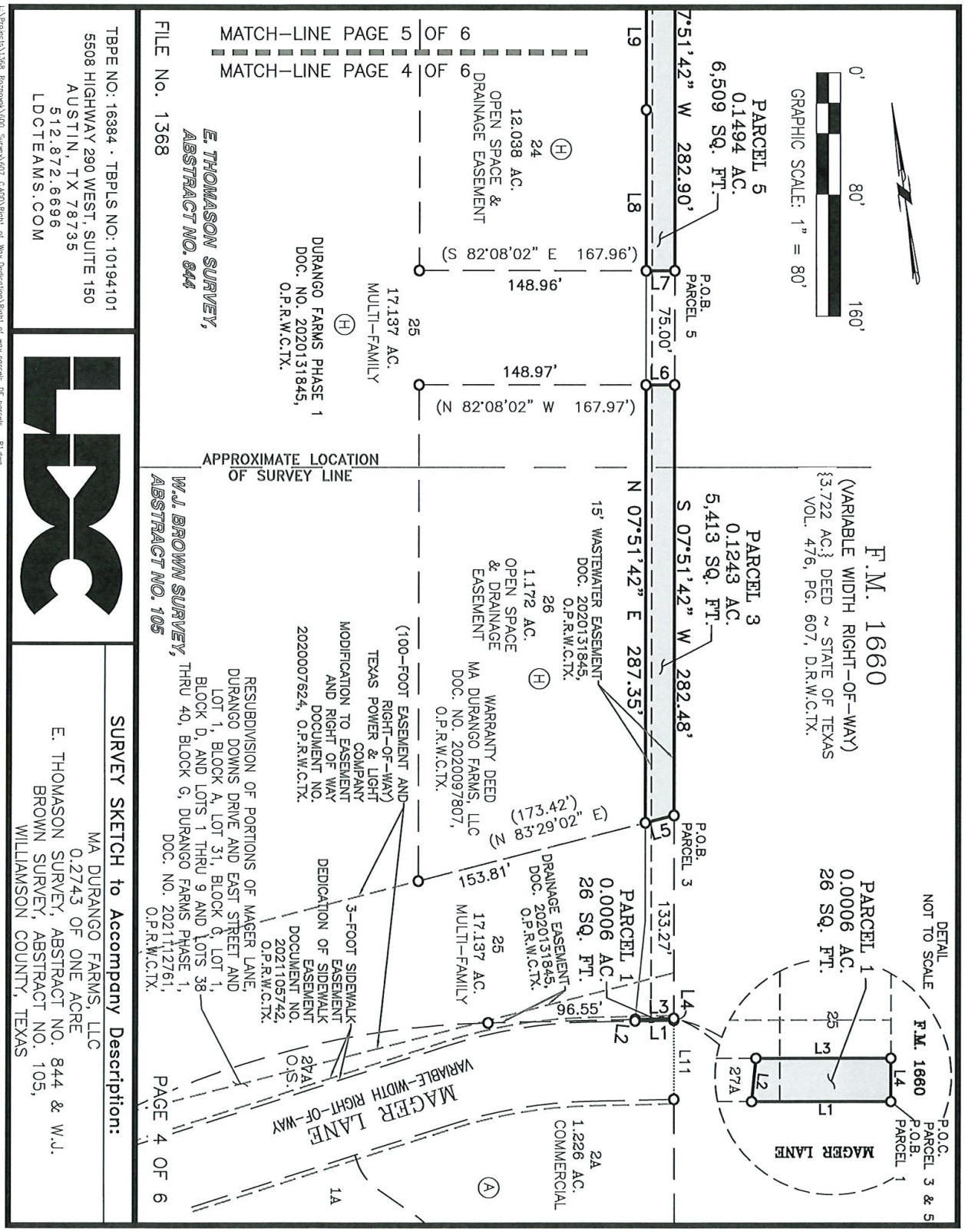

TBPE NO: 16384 · TBPLS NO: 10194101
5508 HIGHWAY 290 WEST, SUITE 150
AUSTIN, TX 78735
512.872.6696
LDCTEAMS.COM

SURVEY SKETCH to Accompany Description:

MA DURANGO FARMS, LLC
0.2743 OF ONE ACRE
E. THOMASON SURVEY, ABSTRACT NO. 844 & W.J. BROWN SURVEY, ABSTRACT NO. 105,
WILLIAMSON COUNTY, TEXAS

L:\Projects\1368 Roznovak\600 Survey\607 CADD\Right of Way Dedication\Right of way parcels DE parcels R1.dwg
PLOT DATE: Jan 21,2022 4:10pm

EXHIBIT A

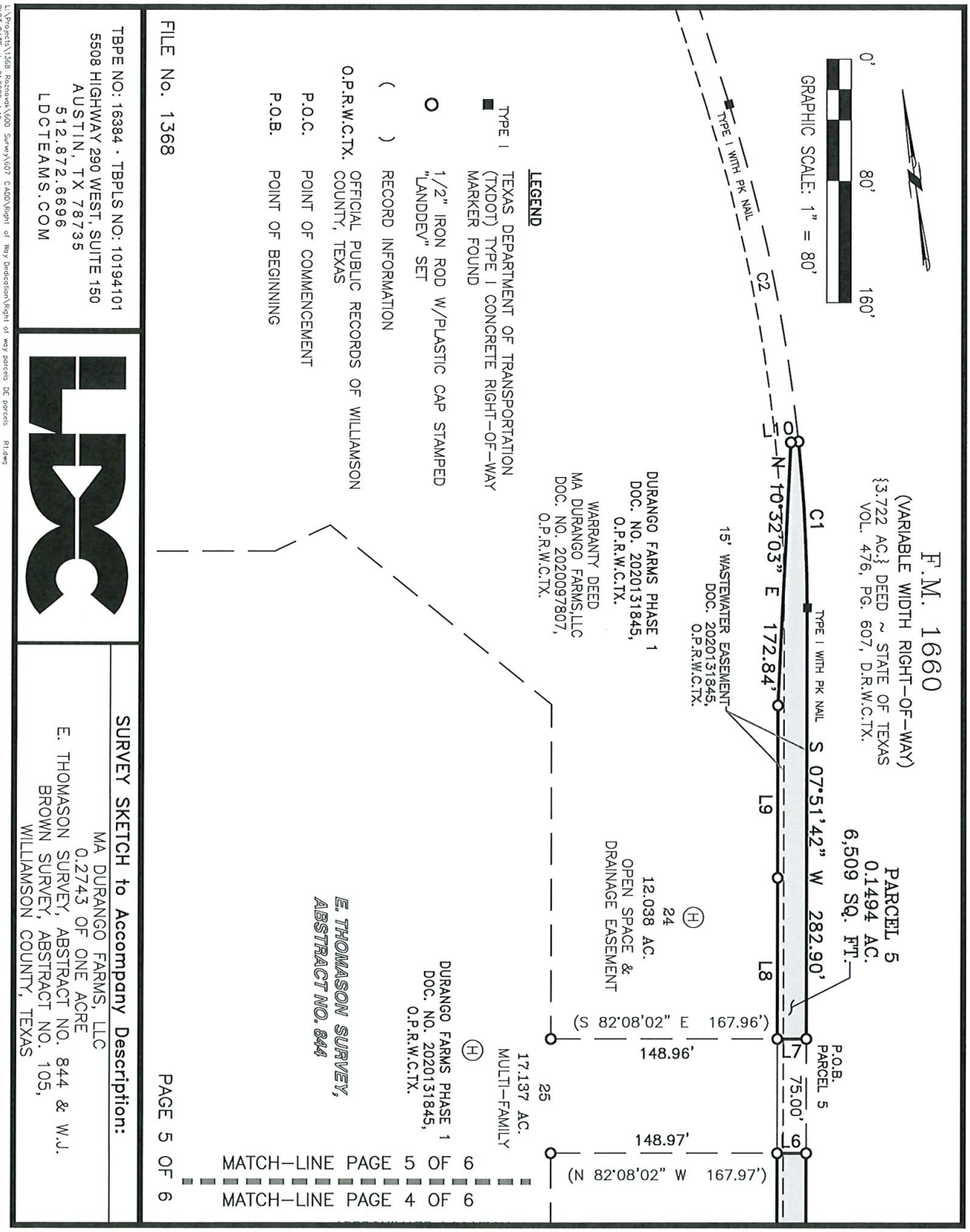
F.M. 1660
(VARIABLE WIDTH RIGHT-OF-WAY)
{3.722 AC.} DEED ~ STATE OF TEXAS
VOL. 476, PG. 607, D.R.W.C.TX.
PARCEL 5
0.1494 AC.
6,509 SQ. FT.
GRAPHIC SCALE: 1" = 80'
0'
80'
160'
TYPE I WITH PK NAIL
C1
C2
L1
N 10°32'03" E 172.84'
S 07°51'42" W 282.90'
L9
L8
L7
L6
75.00'
P.O.B. PARCEL 5
15' WASTEWATER EASEMENT
DOC. 2020131845,
O.P.R.W.C.TX.
DURANGO FARMS PHASE 1
DOC. NO. 2020131845,
O.P.R.W.C.TX.
WARRANTY DEED
MA DURANGO FARMS,LLC
DOC. NO. 2020097807,
O.P.R.W.C.TX.
24
12.038 AC.
OPEN SPACE &
DRAINAGE EASEMENT
(S 82°08'02" E 167.96')
148.96'
148.97'
(N 82°08'02" W 167.97')
25
17.137 AC.
MULTI-FAMILY
DURANGO FARMS PHASE 1
DOC. NO. 2020131845,
O.P.R.W.C.TX.
E. THOMASON SURVEY,
ABSTRACT NO. 844
MATCH-LINE PAGE 5 OF 6
MATCH-LINE PAGE 4 OF 6
LEGEND
TYPE I TEXAS DEPARTMENT OF TRANSPORTATION (TXDOT) TYPE I CONCRETE RIGHT-OF-WAY MARKER FOUND
1/2" IRON ROD W/PLASTIC CAP STAMPED "LANDDEV" SET
( ) RECORD INFORMATION
O.P.R.W.C.TX. OFFICIAL PUBLIC RECORDS OF WILLIAMSON COUNTY, TEXAS
P.O.C. POINT OF COMMENCEMENT
P.O.B. POINT OF BEGINNING
FILE No. 1368
TBPE NO: 16384 · TBPLS NO: 10194101
5508 HIGHWAY 290 WEST, SUITE 150
AUSTIN, TX 78735
512.872.6696
LDCTEAMS.COM
SURVEY SKETCH to Accompany Description:
MA DURANGO FARMS, LLC
0.2743 OF ONE ACRE
E. THOMASON SURVEY, ABSTRACT NO. 844 & W.J.
BROWN SURVEY, ABSTRACT NO. 105,
WILLIAMSON COUNTY, TEXAS
PAGE 5 OF 6

EXHIBIT A

NOTES:

1. BEARING BASIS IS TEXAS COORDINATE SYSTEM, CENTRAL ZONE, NORTH AMERICAN DATUM 1983 (NA2011), EPOCH 2010.00, GRID.
2. DISTANCES SHOWN HEREON ARE IN U.S. SURVEY FEET AND ARE BASED ON SURFACE MEASUREMENTS. TO CONVERT SURFACE DISTANCES TO GRID, MULTIPLY BY THE COMBINED SCALE FACTOR.
3. THE COMBINED SCALE FACTOR FOR THIS PROJECT IS 0.999885.
4. THE BEARINGS AND DISTANCES SHOWN HEREON REFLECT THE BEARINGS AND DISTANCES OF RECORD IN DOCUMENT NO. 2020131845 AND DOCUMENT NO. 2021112761, O.P.R.W.C.TX.
5. SUBJECT TRACTS SHOWN HEREON, ARE SUBJECT TO THE EASEMENT #14358, TO ONCOR ELECTRIC DELIVERY COMPANY, OF RECORD IN DOCUMENT NO. 2010061208, O.P.R.W.C.TX.

CURVE TABLE

CURVE #	RADIUS	ARC DISTANCE	CHORD BEARING	CHORD DISTANCE
C1	1,106.28'	109.31'	S 04°45'42" W	109.26'
C2	1,106.28'	226.67'	N 03°56'19" W	226.28'

LINE TABLE

LINE #	BEARING	DISTANCE
L1	N 83°30'17" W	25.63'
L2	N 13°39'43" E	1.01'
L3	S 83°30'17" E	25.53'
L4	S 07°51'42" W	1.00'
L5	S 83°29'02" W	19.61'
L6	S 82°08'02" E	19.00'
L7	N 82°08'02" W	19.00'
L8	N 07°51'42" E	105.71'
L9	N 07°53'33" E	113.12'
L10	S 88°04'08" E	5.00'
L11	S 07°43'22" W	52.01'

FILE No. 1368

TBPE NO: 16384 · TBPLS NO: 10194101
5508 HIGHWAY 290 WEST, SUITE 150
AUSTIN, TX 78735
512.872.6696
LDCTEAMS.COM

SURVEY SKETCH to Accompany Description:

MA DURANGO FARMS, LLC
0.2743 OF ONE ACRE
E. THOMASON SURVEY, ABSTRACT NO. 844 & W.J. BROWN SURVEY, ABSTRACT NO. 105,
WILLIAMSON COUNTY, TEXAS

L:\Projects\1368 Roznovak\600 Survey\607 CADD\Right of Way Dedication\Right of way parcels DE parcels R1.dwg
PLOT DATE: Jan 21,2022 4:10pm

Return to the following after recording:

HNTB Corporation
c/o Nikki W Fitzpatrick, ROW Manager
101 E Old Settlers Blvd, Ste 225
Round Rock, TX 78664

AGENDA ITEM REPORT
8.9.

To:	City Council
Subject:	Consideration and possible action on Resolution No. R-2022-060 accepting ROW Donation of approximately 0.0947-acre tract or parcel of land in the E. Thomason Survey, Abstract No. 844, and the W.J. Brown Survey, Abstract No. 105, located in Williamson County, Texas, from Vantage at Hutto, LLC. (Legal)
Meeting:	Thursday, June 2, 2022
Department:	Legal /
Staff Contact:	

BACKGROUND INFORMATION:

The City of Hutto and TxDOT require improvements to the intersection of FM 1660 and Mager Lane as condition of final acceptance of the Durango Farms development. The developer has designed and will construct improvements to FM 1660 that include signal modifications, right turn lanes and new wide sidewalk (shared use path). In order to accommodate all of the project elements, a portion of the existing shared use path on FM 1660 will be relocated outside the existing TxDOT right-of-way. The developer is donating right-of-way to the City of Hutto to accommodate construction of the proposed shared use path.

The developer is funding the construction of the improvements. TxDOT will oversee bidding and construction and will own and operate the new facilities within TxDOT right-of-way. The City will maintain the portion of the new shared use path located within City right-of-way, consistent with the existing FM 1660 maintenance agreement between TxDOT and the City of Hutto.

SUMMARY OF REQUEST:

Acceptance of right-of-way donation associated with improvements to FM 1660 at Mager Lane.

STAFF REVIEW:

FINANCIAL IMPACT:

POLICY IMPLICATIONS:

ATTACHMENTS:

AGENDA ITEM REPORT
8.9.

RESOLUTION NO. R-2022-___

A RESOLUTION OF THE CITY OF HUTTO, TEXAS, ACCEPTING ROW DONATION OF APPROXIMATELY 0.0947-ACRE [4,125 SQUARE FEET] TRACT OR PARCEL OF LAND IN THE E. THOMASON SURVEY, ABSTRACT NO. 844, AND THE W.J. BROWN SURVEY, ABSTRACT NO. 105, LOCATED IN WILLIAMSON COUNTY, TEXAS, FROM VANTAGE AT HUTTO, LLC.; AND PROVIDING AN EFFECTIVE DATE

WHEREAS, the City Council desires to accept the ROW Donation of approximately 0.0947-acre [4,125 square feet] tract or parcel of land in the E. Thomason Survey, Abstract No. 844, and the W.J. Brown Survey, Abstract No. 105, located in Williamson County, Texas, from Vantage at Hutto, LLC (the "Donation") attached as Exhibit "A."

NOW, THEREFORE, BE IT RESOLVED BY THE CITY COUNCIL OF THE CITY OF HUTTO, TEXAS, THAT:

SECTION 1: The findings set forth in the recitals of this Resolution are hereby found to be true and correct and are hereby adopted as findings of the City Council and are incorporated into the body of this Resolution as if fully set forth herein.

SECTION 2: The Hutto City Council hereby accepts the donation, attached as Exhibit "A", a copy of the same being attached hereto and incorporated herein for all purposes.

SECTION 3: The City Council hereby finds and declares that written notice of the date, hour, place, and subject of the meeting at which this Resolution was adopted was posted and that such meeting was open to the public as required by law at all times during which this Resolution and the subject matter hereof were discussed, considered and formally acted upon, all as required by the Open Meetings Act, Chapter 551, Texas Government Code, as amended.

RESOLVED this 2nd day of June, 2022.

_____
Mike Snyder, Mayor

ATTEST:

_____
Angela Walton, City Secretary

APPROVED AS TO FORM:

By:_____
Cristian Rosas-Grillet, Assistant City Attorney

EXHIBIT "A"

Notice of Confidentiality Rights: If you are a natural person, you may remove or strike any of the following information from this instrument before it is filed for record in the public records: your Social Security Number or your Driver's License Number.

ROW DONATION DEED

Grantor(s), whether one or more:

Vantage at Hutto, LLC, a Delaware limited liability company,
by and through its Managing Member, Vantage Hutto Holdings, LLC, a Delaware limited liability company

Grantor's Mailing Address (including county):

7334 Blanco Road, Suite 200
San Antonio, Bexar County, Texas 782169-4933

Grantee:

City of Hutto, a Texas home-rule municipal corporation situated in Williamson County

Grantee's Mailing Address (including county):

500 West Live Oak Street
Hutto, Williamson County, Texas 78634

Consideration:

The sum of One and no/100 Dollars ($1.00) to Grantor in hand paid by Grantee, receipt of which is hereby acknowledged, and for which no lien is retained, either expressed or implied.

Property:

Being 0.0947-acre [4,125 square feet] tract or parcel of land in the E. Thomason Survey, Abstract No. 844, and the W.J. Brown Survey, Abstract No. 105, located in Williamson County, Texas, and being more particularly described in the attached Exhibit A (the "**Property**").

Reservations from and Exceptions to Conveyance and Warranty:

This conveyance is made by Grantor and accepted by Grantee subject to the following:

1. Visible and apparent easements not appearing of record.

2. Any discrepancies, conflicts, or shortages in area or boundary lines or any encroachments or any overlapping of improvements which a current survey would show.

3. Easements, restrictions, reservations, covenants, conditions, oil and gas leases, mineral severances, and encumbrances for taxes and assessments (other than liens and conveyances) presently of record in the Official Public Records of Williamson County, Texas, that affect the property, but only to the extent that said items are still valid and in force and effect at this time.

Grantor reserves all of the oil, gas, sulfur in and under the Property but waives all rights of ingress and egress to the surface thereof for the purpose of exploring, developing, mining or drilling for same; however, nothing in this reservation shall affect the title and rights of the Grantee, its successors and assigns, to take and use all other minerals and materials thereon, therein and thereunder.

Grantor is retaining title to the following improvements ("**Retained Improvements**") located on the Property, to wit: **None**

Grantor covenants and agrees to remove the Retained Improvements from the Property by **N/A** day of **N/A**, **N/A**, subject to such extensions of time as may be granted by Grantee in writing. In the event Grantor fails, for any reason, to remove the Retained Improvements within the time prescribed, then, without further consideration, title to all or part of such Retained Improvements not so removed shall pass to and vest in Grantee, its successors and assigns, forever.

Access on and off Grantor's remaining property to and from the highway facility shall be permitted except to the extent that such access is expressly prohibited by the provisions set out in Exhibit "A". Grantor acknowledges that such access on and off the highway facility is subject to regulation as may be determined by the City of Hutto to be necessary in the interest of public safety or by applicable local municipal or county zoning, platting or permitting requirements.

GRANTOR, for the Consideration and subject to the Reservations from Conveyance and the Exceptions to Conveyance and Warranty, grants, sells and conveys to Grantee the Property, together with all and singular the rights and appurtenances thereto in anywise belonging, to have and to hold it to Grantee and Grantee's successors and assigns forever. Grantor binds Grantor and Grantor's heirs, successors and assigns to Warrant and Forever Defend all and singular the Property to Grantee and Grantee's successors and assigns against every person whomsoever lawfully claiming or to the claim the same or any part thereof, except as to the Reservations from Conveyance and the Exceptions to Conveyance and Warranty.

EXECUTED on the date(s) of acknowledgement indicated below.

GRANTOR:

Vantage at Hutto, LLC, a Delaware limited liability company,

By: **Vantage Hutto Holdings, LLC,** a Delaware limited liability company, its Managing Member

_____

David Starr, President

Acknowledgment

State of Texas
County of _____

This instrument was acknowledged before me on _____ day of _____, 2022, by **David Starr, President of Vantage Hutto Holdings, LLC,** a Delaware limited liability company, as Managing Member of **Vantage at Hutto, LLC,** a Delaware limited liability company, for and on behalf of said limited liability company. The acknowledging person(s) personally appeared by:

- ☐ physically appearing before me.
- ☐ appearing by an interactive two-way audio and video communication that meets the requirements for online notarization under Texas Government Code chapter 406, subchapter C.

[Notary Seal]

_____
Notary Public in and for the State of Texas

_____
Printed Name of Notary Public

My commission expires: _____

EXHIBIT A

FIELD NOTES DESCRIPTION

DESCRIPTION OF 0.0947 OF ONE ACRE OF LAND IN THE E. THOMASON SURVEY, ABSTRACT NO. 844, AND THE W.J. BROWN SURVEY, ABSTRACT NO. 105, WILLIAMSON COUNTY, TEXAS; BEING A PORTION OF LOT 25, BLOCK H, DURANGO FARMS PHASE 1, A SUBDIVISION ACCORDING TO THE PLAT OR MAP OF RECORD IN DOCUMENT NO. 2020131845, OFFICIAL PUBLIC RECORDS OF WILLIAMSON COUNTY, TEXAS; SAID LOT 25, BLOCK H, DURANGO FARMS PHASE 1, BEING CONVEYED IN THE SPECIAL WARRANTY DEED TO VANTAGE AT HUTTO, LLC OF RECORD IN DOCUMENT NO. 2020139259, OFFICIAL PUBLIC RECORDS OF WILLIAMSON COUNTY, TEXAS; SAID 0.0947 OF ONE ACRE OF LAND, BEING COMPRISED OF PARCEL 2 (0.0620 ACRE) AND PARCEL 4 (0.0327 ACRE) AS SURVEYED BY LANDDEV CONSULTING, LLC, AND SHOWN ON THE ACCOMPANYING SKETCH, BEING MORE PARTICULARLY DESCRIBED BY METES AND BOUNDS AS FOLLOWS:

PARCEL 2 – 0.0620 Acre (2,699 square feet)

COMMENCING at a ½-inch iron rod with a plastic cap stamped "LANDDEV" set in the west right-of-way line of F.M. 1660, a variable-width right-of-way, for the north right-of-way line of Mager Lane, a variable-width right-of-way, as shown on the Resubdivision of Portions of Mager Lane, Durango Downs Drive and East Street and Lot 1, Block A, Lot 31, Block C, Lot 1, Block D, and Lots 1 thru 9 and Lots 38 thru 40, Block G, Durango Farms Phase 1, a subdivision according to the plat or map of record in Document No. 2021112761, Official Public Records of Williamson County, Texas, for the southeast corner of Lot 27A, Block H, said Resubdivision, from which a ½-inch iron rod with a plastic cap stamped "LANDDEV" set in the west right-of-way line of said F.M. 1660, for the south right-of-way line of said Mager Lane, and the northeast corner of Lot 2A, Block A, said Resubdivision bears S 07°43'22" W, a distance of 52.01 feet;

THENCE N 07°51'42" E, with the west right-of-way line of said F.M. 1660, with the east line of said Lot 27A, Block H, said Resubdivision, a distance of 1.00 feet to a ½-inch iron rod with a plastic cap stamped "LANDDEV" set for the northeast corner of said Lot 27A, Block H, said Resubdivision, same being the southeast corner of said Lot 25, Block H, Durango Farms Phase 1, for the southeast corner and **POINT OF BEGINNING** of the tract described herein;

THENCE N 83°30'17" W, leaving the west right of way line of said F.M. 1660, with the north line of said Lot 27A, Block H, said Resubdivision, with the south line of said Lot 25, Block H, Durango Farms Phase 1, with the south line of the tract described herein, a distance of 25.53 feet to a ½-inch iron rod with a plastic cap stamped "LANDDEV" set for the southwest corner of the tract described herein, from which a ½-inch iron rod with a plastic cap stamped "LANDDEV" set for a point-of-curvature in the north line of said Lot 27A, Block H, said Resubdivision, and the south line of said Lot 25, Block H, Durango Farms Phase 1 bears N 83°30'17" W, a distance of 96.55 feet;

THENCE leaving the north line of said Lot 27A, Block H, said Resubdivision, crossing said Lot 25, Block H, Durango Farms Phase 1, with the west line of the tract described herein, the following two (2) courses and distances:

1. N 13°39'43" E, a distance of 64.54 feet to a ½-inch iron rod with a plastic cap stamped "LANDDEV" set for an angle point, and

2. N 07°51'42" E, a distance of 64.80 feet to a ½-inch iron rod with a plastic cap stamped "LANDDEV" set in an interior north line of said Lot 25, Block H, Durango Farms Phase 1, same being the south line of Lot 26, Block H, said Durango Farms Phase 1, for the northwest corner of the tract described herein, from which a ½-inch iron rod with a plastic cap stamped "LANDDEV" set for a re-entrant corner of said Lot 25, Block H, Durango Farms Phase 1, same being the southwest corner of said Lot 26, Block H, Durango Farms Phase 1 bears S 83°29'02" W, a distance of 153.81 feet;

THENCE N 83°29'02" E, with an interior north line of said Lot 25, Block H, Durango Farms Phase 1, with the south line of said Lot 26, Block H, Durango Farms Phase 1, with the north line of the tract described herein, a distance of 19.61 feet to a ½-inch iron rod with a plastic cap stamped "LANDDEV" set in the west right-of-way line of said F.M. 1660, for a northeast corner of said Lot 25, Block H, Durango Farms Phase 1, same being the southeast corner of said Lot 26, Block H, Durango Farms Phase 1, for the northeast corner of the tract described herein, from which a Texas Department of Transportation (TxDOT) Type I concrete right-of-way marker found at a point of curvature in the west right-of-way line of said F.M. 1660 and the east line of Lot 24, Block H, said Durango Farms Phase 1 bears N 07°51'42" E, a distance of 640.38 feet;

THENCE S 07°51'42" W, with the west right-of-way line of said F.M. 1660 and the east line of said Lot 25, Block H, Durango Farms Phase 1, with the east line of the tract described herein, a distance of 133.27 feet to the **POINT OF BEGINNING** and containing 0.0620 of one acre (2,699 square feet) of land.

EXHIBIT A

PARCEL 4 – 0.0327 Acre (1,425 square feet)

COMMENCING at a ½-inch iron rod with a plastic cap stamped "LANDDEV" set in the west right-of-way line of F.M. 1660, a variable-width right-of-way, for the north right-of-way line of Mager Lane, a variable-width right-of-way, as shown on the Resubdivision of Portions of Mager Lane, Durango Downs Drive and East Street and Lot 1, Block A, Lot 31, Block C, Lot 1, Block D, and Lots 1 thru 9 and Lots 38 thru 40, Block G, Durango Farms Phase 1, a subdivision according to the plat or map of record in Document No. 2021112761, Official Public Records of Williamson County, Texas, for the southeast corner of Lot 27A, Block H, said Resubdivision, from which a ½-inch iron rod with a plastic cap stamped "LANDDEV" set in the west right-of-way line of said F.M. 1660, for the south right-of-way line of said Mager Lane, and the northeast corner of Lot 2A, Block A, said Resubdivision bears S 07°43'22" W, a distance of 52.01 feet;

THENCE N 07°51'42" E, with the west right-of-way line of said F.M. 1660, with the east line of said Lot 27A, Block H, said Resubdivision, with the east line of said Lot 25, Block H, Durango Farms Phase 1, and with the east line of Lot 26, Block H, said Durango Farms Phase 1, a distance of 416.75 feet to a ½-inch iron rod with a plastic cap stamped "LANDDEV" set for a southeast corner of said Lot 25, Block H, Durango Farms Phase 1, same being the northeast corner of said Lot 26, Block H, Durango Farms Phase 1, for the southeast corner and **POINT OF BEGINNING** of the tract described herein;

THENCE N 82°08'02" W, leaving the west right of way line of said F.M. 1660, with the north line of said Lot 26, Block H, Durango Farms Phase 1, with an interior south line of said Lot 25, Block H, Durango Farms Phase 1, with the south line of the tract described herein, a distance of 19.00 feet to a ½-inch iron rod with a plastic cap stamped "LANDDEV" set for the southwest corner of the tract described herein, from which a ½-inch iron rod with a plastic cap stamped "LANDDEV" set for a re-entrant corner of said Lot 25, Block H, Durango Farms Phase 1, same being the northwest corner of said Lot 26, Block H, Durango Farms Phase 1 bears N 82°08'02" W, a distance of 148.97 feet;

THENCE N 07°51'42" E, leaving the north line of said Lot 26, Block H, Durango Farms Phase 1, crossing said Lot 25, Block H, Durango Farms Phase 1, with the west line of the tract described herein, a distance of 75.00 feet to a ½-inch iron rod with a plastic cap stamped "LANDDEV" set in a north line of said Lot 25, Block H, Durango Farms Phase 1, same being the south line of Lot 24, Block H, said Durango Farms Phase 1, for the northwest corner of the tract described herein, from which a ½-inch iron rod with a plastic cap stamped "LANDDEV" set for a re-entrant corner of said Lot 25, Block H, Durango Farms Phase 1, same being the southwest corner of said Lot 24, Block H, Durango Farms Phase 1 bears N 82°08'02" W, a distance of 148.96 feet;

THENCE S 82°08'02" E, with a north line of said Lot 25, Block H, Durango Farms Phase 1, with the south line of said Lot 24, Block H, Durango Farms Phase 1, with the north line of the tract described herein, a distance of 19.00 feet to a ½-inch iron rod with a plastic cap stamped "LANDDEV" set in the west right-of-way line of said F.M. 1660, for a northeast corner of said Lot 25, Block H, Durango Farms Phase 1, same being the southeast corner of said Lot 24, Block H, Durango Farms Phase 1, for the northeast corner of the tract described herein, from which a Texas Department of Transportation (TxDOT) Type I concrete right-of-way marker found at a point of curvature in the west right-of-way line of said F.M. 1660 and the east line of said Lot 24, Block H, Durango Farms Phase 1 bears N 07°51'42" E, a distance of 282.90 feet;

THENCE S 07°51'42" W, with the west right-of-way line of said F.M. 1660 and the east line of said Lot 25, Block H, Durango Farms Phase 1, with the east line of the tract described herein, a distance of 75.00 feet to the **POINT OF BEGINNING** and containing 0.0327 of one acre (1,425 square feet) of land.

FOR A TOTAL AREA OF 0.0947 OF ONE ACRE BEING ALL OF PARCEL 2 AND PARCEL 4 DESCRIBED HEREIN.

BEARING BASIS: Texas Coordinate System, Central Zone, NAD83, Grid.

THE STATE OF TEXAS

KNOW ALL MEN BY THESE PRESENTS:

COUNTY OF TRAVIS

That I, Ernesto Navarrete, a Registered Professional Land Surveyor, do hereby certify that the above description is true and correct to the best of my knowledge and belief and that the parcel of land described herein is based upon a survey performed upon the ground under my direct supervision during the month of July, 2021.

WITNESS MY HAND AND SEAL at Austin, Travis County, Texas, this 1st day of October 2021 A.D.

LANDDEV CONSULTING, LLC
5508 Highway 290 West, Suite 150
Austin, Texas 78735

Ernesto Navarrete
Registered Professional Land Surveyor
No. 6642 – State of Texas

STATE OF TEXAS
REGISTERED
ERNESTO NAVARRETE
6642
PROFESSIONAL
LAND SURVEYOR

EXHIBIT A

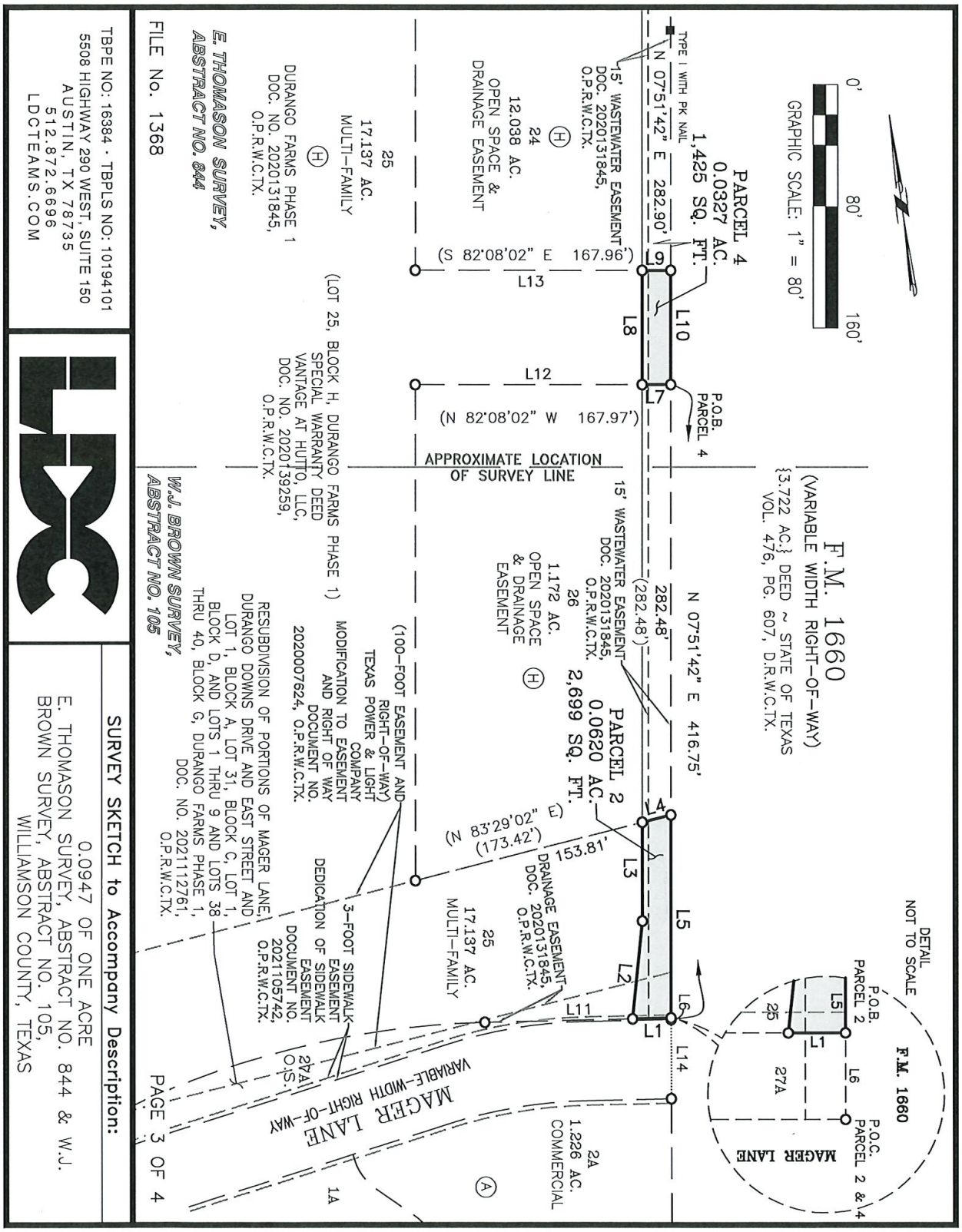

TBPE NO: 16384 · TBPLS NO: 10194101
5508 HIGHWAY 290 WEST, SUITE 150
AUSTIN, TX 78735
512.872.6696
LDCTEAMS.COM

FILE No. 1368

SURVEY SKETCH to Accompany Description:

0.0947 OF ONE ACRE
E. THOMASON SURVEY, ABSTRACT NO. 844 & W.J.
BROWN SURVEY, ABSTRACT NO. 105,
WILLIAMSON COUNTY, TEXAS

PAGE 3 OF 4

L:\Projects\1368 Roznowski\600 Survey\607 CADD\Right of Way Dedication\Right of way parcels MF parcels.dwg
PLOT DATE: Sep 14,2021 4:44pm

EXHIBIT A

LEGEND

■ TYPE I	TEXAS DEPARTMENT OF TRANSPORTATION (TXDOT) TYPE I CONCRETE RIGHT-OF-WAY MARKER FOUND
O	1/2" IRON ROD W/PLASTIC CAP STAMPED "LANDDEV" SET
( )	RECORD INFORMATION
O.P.R.W.C.TX.	OFFICIAL PUBLIC RECORDS OF WILLIAMSON COUNTY, TEXAS
P.O.C.	POINT OF COMMENCEMENT
P.O.B.	POINT OF BEGINNING

NOTES:

1. BEARING BASIS IS TEXAS COORDINATE SYSTEM, CENTRAL ZONE, NORTH AMERICAN DATUM 1983 (NA2011), EPOCH 2010.00, GRID.
2. DISTANCES SHOWN HEREON ARE IN U.S. SURVEY FEET AND ARE BASED ON SURFACE MEASUREMENTS. TO CONVERT SURFACE DISTANCES TO GRID, MULTIPLY BY THE COMBINED SCALE FACTOR.
3. THE COMBINED SCALE FACTOR FOR THIS PROJECT IS 0.999885.
4. THE BEARINGS AND DISTANCES SHOWN HEREON REFLECT THE BEARINGS AND DISTANCES OF RECORD IN DOCUMENT NO. 2020131845 AND DOCUMENT NO. 2021112761, O.P.R.W.C.TX.
5. SUBJECT TRACTS SHOWN HEREON, ARE SUBJECT TO THE EASEMENT #14358, TO ONCOR ELECTRIC DELIVERY COMPANY, OF RECORD IN DOCUMENT NO. 2010061208, O.P.R.W.C.TX.

LINE TABLE

LINE #	BEARING	DISTANCE
L1	N 83°30'17" W	25.53'
L2	N 13°39'43" E	64.54'
L3	N 07°51'42" E	64.80'
L4	N 83°29'02" E	19.61'
L5	S 07°51'42" W	133.27'
L6	N 07°51'42" E	1.00'
L7	N 82°08'02" W	19.00'
L8	N 07°51'42" E	75.00'
L9	S 82°08'02" E	19.00'
L10	S 07°51'42" W	75.00'
L11	N 83°30'17" W	96.55'
L12	N 82°08'02" W	148.97'
L13	N 82°08'02" W	148.96'
L14	S 07°43'22" W	52.01'

FILE No. 1368

TBPE NO: 16384 · TBPLS NO: 10194101
5508 HIGHWAY 290 WEST, SUITE 150
AUSTIN, TX 78735
512.872.6696
LDCTEAMS.COM

SURVEY SKETCH to Accompany Description:

0.0947 OF ONE ACRE
E. THOMASON SURVEY, ABSTRACT NO. 844 & W.J. BROWN SURVEY, ABSTRACT NO. 105,
WILLIAMSON COUNTY, TEXAS

L:\Projects\1368 Roznovak\600 Survey\607 CADD\Right of Way Dedication\Right of way parcels MF parcels.dwg
PLOT DATE: Sep 14,2021 4:45pm

Return to the following after recording:

HNTB Corporation
c/o Nikki W Fitzpatrick, ROW Manager
101 E Old Settlers Blvd, Ste 225
Round Rock, TX 78664

AGENDA ITEM REPORT
8.10.

To:	City Council
Subject:	Consideration and possible action on Resolution No. R-2022-061 accepting the conveyance of approximately 0.0006 of one acre on land in the W.J. Brown Survey, Abstract No. 105, located in Williamson County, Texas, and 0.0012 of one acre of the land in the W.J. Brown Survey, Abstract No. 105 from MA Durango Farms, LLC, Meritage Homes of Texas, LLC, Vantage at Hutto, LLC, and Durango Farms Owners Association, Inc. (Legal)
Meeting:	Thursday, June 2, 2022
Department:	Legal /
Staff Contact:	

BACKGROUND INFORMATION:

The City of Hutto and TxDOT require improvements to the intersection of FM 1660 and Mager Lane as condition of final acceptance of the Durango Farms development. The developer has designed and will construct improvements to FM 1660 that include signal modifications, right turn lanes and new wide sidewalk (shared use path). In order to accommodate all of the project elements, a portion of the existing shared use path on FM 1660 will be relocated outside the existing TxDOT right-of-way. The developer is donating right-of-way to the City of Hutto to accommodate construction of the proposed shared use path.

The developer is funding the construction of the improvements. TxDOT will oversee bidding and construction and will own and operate the new facilities within TxDOT right-of-way. The City will maintain the portion of the new shared use path located within City right-of-way, consistent with the existing FM 1660 maintenance agreement between TxDOT and the City of Hutto.

SUMMARY OF REQUEST:

Acceptance of right-of-way donation associated with improvements to FM 1660 at Mager Lane.

STAFF REVIEW:

FINANCIAL IMPACT:

POLICY IMPLICATIONS:

AGENDA ITEM REPORT
8.10.

ATTACHMENTS:

RESOLUTION NO. R-2022-___

A RESOLUTION OF THE CITY OF HUTTO, TEXAS, ACCEPTING THE CONVEYANCE OF APPROXIMATELY 0.0006 OF ONE ACRE ON LAND IN THE W.J. BROWN SURVEY, ABSTRACT NO. 105, LOCATED IN WILLIAMSON COUNTY, TEXAS, AND 0.0012 OF ONE ACRE OF THE LAND IN THE W.J. BROWN SURVEY, ABSTRACT NO. 105 FROM MA DURANGO FARMS, LLC, MERITAGE HOMES OF TEXAS, LLC, VANTAGE AT HUTTO, LLC, AND DURANGO FARMS OWNERS ASSOCIATION, INC.; AND PROVIDING AN EFFECTIVE DATE

WHEREAS, the City Council desires to accept the conveyance of approximately 0.0006 of one acre on land in the W.J. Brown Survey, Abstract No. 105, located in Williamson County, Texas, and 0.0012 of one acre of the land in the W.J. Brown Survey, Abstract No. 105 from MA Durango Farms, LLC, Meritage Homes of Texas, LLC, Vantage at Hutto, LLC, and Durango Farms Owners Association, Inc. (the "Conveyance") attached as Exhibit "A."

NOW, THEREFORE, BE IT RESOLVED BY THE CITY COUNCIL OF THE CITY OF HUTTO, TEXAS, THAT:

SECTION 1: The findings set forth in the recitals of this Resolution are hereby found to be true and correct and are hereby adopted as findings of the City Council and are incorporated into the body of this Resolution as if fully set forth herein.

SECTION 2: The Hutto City Council hereby accepts the conveyance, attached as Exhibit "A", a copy of the same being attached hereto and incorporated herein for all purposes.

SECTION 3: The City Council hereby finds and declares that written notice of the date, hour, place, and subject of the meeting at which this Resolution was adopted was posted and that such meeting was open to the public as required by law at all times during which this Resolution and the subject matter hereof were discussed, considered and formally acted upon, all as required by the Open Meetings Act, Chapter 551, Texas Government Code, as amended.

RESOLVED this 2nd day of June, 2022.

_____
Mike Snyder, Mayor

ATTEST:

_____
Angela Walton, City Secretary

APPROVED AS TO FORM:

By:_____
Cristian Rosas-Grillet, Assistant City Attorney

EXHIBIT “A”

Notice of Confidentiality Rights: If you are a natural person, you may remove or strike any of the following information from this instrument before it is filed for record in the public records: your Social Security Number or your Driver's License Number.

QUITCLAIM DEED

THE STATE OF TEXAS	§	**ROW CSJ:** N/A
	§	
COUNTY OF WILLIAMSON	§	**KNOW ALL MEN BY THESE PRESENTS:**

That, **MA DURANGO FARMS, LLC,** a Texas limited liability company, by and through its Manager **MA PARTNERS, LLC,** a Texas limited liability company, of the County of Dallas, State of Texas, **MERITAGE HOMES OF TEXAS, LLC,** an Arizona limited liability company, by and through its managing member **MERITAGE HOMES OF TEXAS HOLDING, INC,** an Arizona corporation, of the County of Travis, State of Texas, **VANTAGE AT HUTTO, LLC,** a Delaware limited liability company, by and through its Managing Member **VANTAGE HUTTO HOLDINGS, LLC,** a Delaware limited liability company, of the County of Bexar, State of Texas, and **DURANGO FARMS OWNERS ASSOCIATION, INC,** a Texas corporation, of the County of Dallas, State of Texas, hereinafter referred to as "Grantor", whether one or more, for and in consideration of the sum of One Dollars ($1.00) and other good and valuable consideration to Grantors in hand paid by the **CITY OF HUTTO, a Texas home-rule municipal corporation situated in Williamson County**, hereinafter referred to as "Grantee", whether one or more, the receipt of which is hereby acknowledged, and for which no lien is retained, either expressed or implied, have Quitclaimed and do by these presents Bargain, Sell, Release and forever Quitclaim unto the **City of Hutto** all of Grantors' right, title, interest, claim and demand in and to that certain tract or parcel of land, including any improvements thereon, situated in the County of Williamson, State of Texas, more particularly described in **EXHIBIT(S) "A" and "B"**, attached hereto and incorporated herein for any and all purposes.

TO HAVE AND TO HOLD for said purposes together with all and singular the rights, privileges, and appurtenances thereto in any manner belonging unto the said City of Hutto forever.

Grantee's Address: 500 West Live Oak Street, Hutto, Williamson County, Texas 78634

IN WITNESS WHEREOF, this instrument is executed on the date(s) of acknowledgments indicated below.

GRANTOR:

MA DURANGO FARMS, LLC, a Texas limited liability company

By: **MA PARTNERS, LLC,** a Texas limited liability company, its Manager

_____
Wyatt Henderson

Title: **Manager**

Acknowledgment

State of Texas
County of _____

This instrument was acknowledged before me on _____ day of _____, 20____, by **Wyatt Henderson, Manager of MA PARTNERS, LLC,** a Texas limited liability company, as Manager of **MA DURANGO FARMS, LLC,** a Texas limited liability company, for and on behalf of said limited liability company. The acknowledging person(s) personally appeared by:

- ☐ physically appearing before me.
- ☐ appearing by an interactive two-way audio and video communication that meets the requirements for online notarization under Texas Government Code chapter 406, subchapter C.

[Notary Seal]

_____
Notary Public in and for the State of Texas

_____
Printed Name of Notary Public

My commission expires: _____

GRANTOR:

MERITAGE HOMES OF TEXAS, LLC, an Arizona limited liability company

By: **MERITAGE HOMES OF TEXAS HOLDING, INC**, an Arizona corporation, its sole member

_____

Elliot Jones

Title: **Division Vice President**

Acknowledgment

State of Texas
County of _____

This instrument was acknowledged before me on _____ day of _____, 20____, by **Elliot Jones, Division Vice President of MERITAGE HOMES OF TEXAS, LLC,** an Arizona limited liability company, by and through its sole member **MERITAGE HOMES OF TEXAS HOLDING, INC,** an Arizona corporation, for and on behalf of said company. The acknowledging person(s) personally appeared by:

- ☐ physically appearing before me.
- ☐ appearing by an interactive two-way audio and video communication that meets the requirements for online notarization under Texas Government Code chapter 406, subchapter C.

[Notary Seal]

_____
Notary Public in and for the State of Texas

_____
Printed Name of Notary Public

My commission expires: _____

GRANTOR:

VANTAGE AT HUTTO, LLC, a Delaware limited liability company,

By: **VANTAGE HUTTO HOLDINGS, LLC,** a Delaware limited liability company, its Managing Member

_____
David Starr

Title: President

Acknowledgment

State of Texas
County of _____

This instrument was acknowledged before me on _____ day of _____, 20____, by **David Starr, President of VANTAGE HUTTO HOLDINGS, LLC,** a Delaware limited liability company, Managing Member of **VANTAGE AT HUTTO, LLC,** a Delaware limited liability company, for and on behalf of said limited liability company. The acknowledging person(s) personally appeared by:

- ☐ physically appearing before me.
- ☐ appearing by an interactive two-way audio and video communication that meets the requirements for online notarization under Texas Government Code chapter 406, subchapter C.

[Notary Seal]

_____
Notary Public in and for the State of Texas

_____
Printed Name of Notary Public

My commission expires: _____

GRANTOR:

DURANGO FARMS OWNERS ASSOCIATION, INC., a Texas corporation

_____
Wyatt Henderson, Director

_____
David Howell, Director

_____
Rodrigo Charles, Director

Acknowledgment

State of Texas
County of _____

This instrument was acknowledged before me on _____ day of _____, 20____, by **Wyatt Henderson, Director of DURANGO FARMS OWNERS ASSOCIATION, INC.,** a Texas corporation, for and on behalf of said company. The acknowledging person(s) personally appeared by:

- ☐ physically appearing before me.
- ☐ appearing by an interactive two-way audio and video communication that meets the requirements for online notarization under Texas Government Code chapter 406, subchapter C.

[Notary Seal]

_____
Notary Public in and for the State of Texas

_____
Printed Name of Notary Public

My commission expires: _____

Acknowledgment

State of Texas
County of _____

This instrument was acknowledged before me on _____ day of _____, 20____, by **David Howell, Director of DURANGO FARMS OWNERS ASSOCIATION, INC.,** a Texas corporation, for and on behalf of said company. The acknowledging person(s) personally appeared by:

- ☐ physically appearing before me.
- ☐ appearing by an interactive two-way audio and video communication that meets the requirements for online notarization under Texas Government Code chapter 406, subchapter C.

[Notary Seal]

_____
Notary Public in and for the State of Texas

_____
Printed Name of Notary Public

My commission expires: _____

Acknowledgment

State of Texas
County of _____

This instrument was acknowledged before me on _____ day of _____, 20____, by **Rodrigo Charles, Director of DURANGO FARMS OWNERS ASSOCIATION, INC.,** a Texas corporation, for and on behalf of said company. The acknowledging person(s) personally appeared by:

- ☐ physically appearing before me.
- ☐ appearing by an interactive two-way audio and video communication that meets the requirements for online notarization under Texas Government Code chapter 406, subchapter C.

[Notary Seal]

_____
Notary Public in and for the State of Texas

_____
Printed Name of Notary Public

My commission expires: _____

EXHIBIT A

Williamson County, Texas
W.J. Brown Survey, Abstract No. 105

0.0006 ac. ~ 26 sq. ft.
portion of esmt. to be vacated
Page 1 of 3

FIELD NOTES DESCRIPTION

DESCRIPTION OF 0.0006 OF ONE ACRE (26 SQUARE FEET) OF LAND IN THE W.J. BROWN SURVEY, ABSTRACT NO. 105, WILLIAMSON COUNTY, TEXAS; BEING A PORTION OF LOT 27A, BLOCK H, RESUBDIVISION OF PORTIONS OF MAGER LANE, DURANGO DOWNS DRIVE AND EAST STREET AND LOT 1, BLOCK A, LOT 31, BLOCK C, LOT 1, BLOCK D, AND LOTS 1 THRU 9 AND LOTS 38 THRU 40, BLOCK G, DURANGO FARMS PHASE 1, A SUBDIVISION ACCORDING TO THE PLAT OR MAP OF RECORD IN DOCUMENT NO. 2021112761, OFFICIAL PUBLIC RECORDS OF WILLIAMSON COUNTY, TEXAS, AND ALSO, SAID 0.0006 OF ONE ACRE (26 SQUARE FEET) OF LAND BEING A PORTION OF A THREE FOOT WIDE SIDEWALK EASEMENT AS DEPICTED ON EXHIBIT "B" IN THE DEDICATION OF SIDEWALK EASEMENT RECORDED IN DOCUMENT NO. 2021105742, OFFICIAL PUBLIC RECORDS OF WILLIAMSON COUNTY, TEXAS; SAID 0.0006 OF ONE ACRE (26 SQUARE FEET) OF LAND, AS SURVEYED BY LANDDEV CONSULTING, LLC AND SHOWN ON THE ACCOMPANYING SKETCH, BEING MORE PARTICULARLY DESCRIBED BY METES AND BOUNDS AS FOLLOWS:

BEGINNING at a ½-inch iron rod with a plastic cap stamped "LANDDEV" set in the intersecting west right-of-way line of F.M. 1660, a variable-width right-of-way and the north right-of-way line of Mager Lane, a variable-width right-of-way, as shown on the said Resubdivision plat, in the west line of a certain called 3.722 acre tract of land described in the deed to the State of Texas of record in Volume 476, Page 607, Deed Records of Williamson County, Texas, for the southeast corner of said Lot 27A, Block H, said Resubdivision, for the eastern terminus of the south line of the said 3' wide sidewalk easement, for the southeast corner and **POINT OF BEGINNING** of the tract described herein, from which a ½-inch iron rod with a plastic cap stamped "LANDDEV" set in the intersecting west right-of-way line of said F.M. 1660 and the south right-of-way line of said Mager Lane, for the northeast corner of Lot 2A, Block A, said Resubdivision bears S 07°43'22" W, a distance of 52.01 feet;

THENCE N 83°30'17" W, leaving the west right-of-way line of F.M. 1660, leaving the west line of the said 3.722 acre tract, with the north right-of-way line of said Mager Lane, with the south line of said Lot 27A, Block H, said Resubdivision, with the south line of the said 3' wide sidewalk easement, with the south line of the tract described herein, a distance of 25.63 feet to a calculated point for the southwest corner of the tract described herein, from which a ½-inch iron rod with a plastic cap stamped "LANDDEV" set for a point-of-curvature in the north right-of-way line of said Mager Lane and the south line of said Lot 27A, Block H, said Resubdivision, bears N 83°30'17" W, a distance of 30.98 feet;

THENCE N 13°39'43" E, leaving the north right-of-way line of said Mager Lane, crossing said Lot 27A, Block H, said Resubdivision, crossing the said 3' wide sidewalk easement, with the west line of the tract described herein, a distance of 1.01 feet to a calculated point in the north line of said Lot 27A, Block H, said Resubdivision, in the south line of Lot 25, Block H, Durango Farms Phase 1, a subdivision according to the plat or map of record in Document No. 2020131845, Official Public Records of Williamson County, Texas, for the northwest corner of the tract described herein, from which a ½-inch iron rod with a plastic cap stamped "LANDDEV" set for a point-of-curvature in the north line of said Lot 27A, Block H, said Resubdivision, and the south line of said Lot 25, Block H, Durango Farms Phase 1 bears N 83°30'17" W, a distance of 96.55 feet;

THENCE S 83°30'17" E, continuing across the said 3' wide sidewalk easement, with the north line of said Lot 27A, Block H, said Resubdivision, with the south line of said Lot 25, Block H, Durango Farms Phase 1, with the north line of the tract described herein, a distance of 25.53 feet to a ½-inch iron rod with a plastic cap stamped "LANDDEV" set in the west right-of-way line of said F.M. 1660, in the west line of the said 3.722 acre tract, in the eastern terminus of the said 3' wide sidewalk easement, for the northeast corner of said Lot 27A, Block H, said Resubdivision, and the southeast corner of said Lot 25, Block H, Durango Farms Phase 1, for the northeast corner of the tract described herein;

THENCE S 07°51'42" W, with the west right-of-way line of said F.M. 1660, with the west line of the said 3.722 acre tract, with the east line of said Lot 27A, Block H, said Resubdivision, with the eastern terminus of the said 3' wide sidewalk easement, with the east line of the tract described herein, a distance of 1.00 foot to the **POINT OF BEGINNING** and containing 0.0006 of one acre (26 square feet) of land, more or less.

EXHIBIT A

Williamson County, Texas
W.J. Brown Survey, Abstract No. 105

0.0006 ac. ~ 26 sq. ft.
portion of esmt. to be vacated
Page 2 of 3

BEARING BASIS: Texas Coordinate System, Central Zone, NAD83, Grid.

THE STATE OF TEXAS

KNOW ALL MEN BY THESE PRESENTS:

COUNTY OF TRAVIS

That I, Ernesto Navarrete, a Registered Professional Land Surveyor, do hereby certify that the above description is true and correct to the best of my knowledge and belief and that the parcel of land described herein is based upon a survey performed upon the ground under my direct supervision during the month of July, 2021.

WITNESS MY HAND AND SEAL at Austin, Travis County, Texas, this 21st day of January 2022 A.D.

LANDDEV CONSULTING, LLC
5508 Highway 290 West, Suite 150
Austin, Texas 78735

Ernesto Navarrete
Registered Professional Land Surveyor
No. 6642 – State of Texas

STATE OF TEXAS
REGISTERED
ERNESTO NAVARRETE
6642
PROFESSIONAL
LAND SURVEYOR

EXHIBIT A

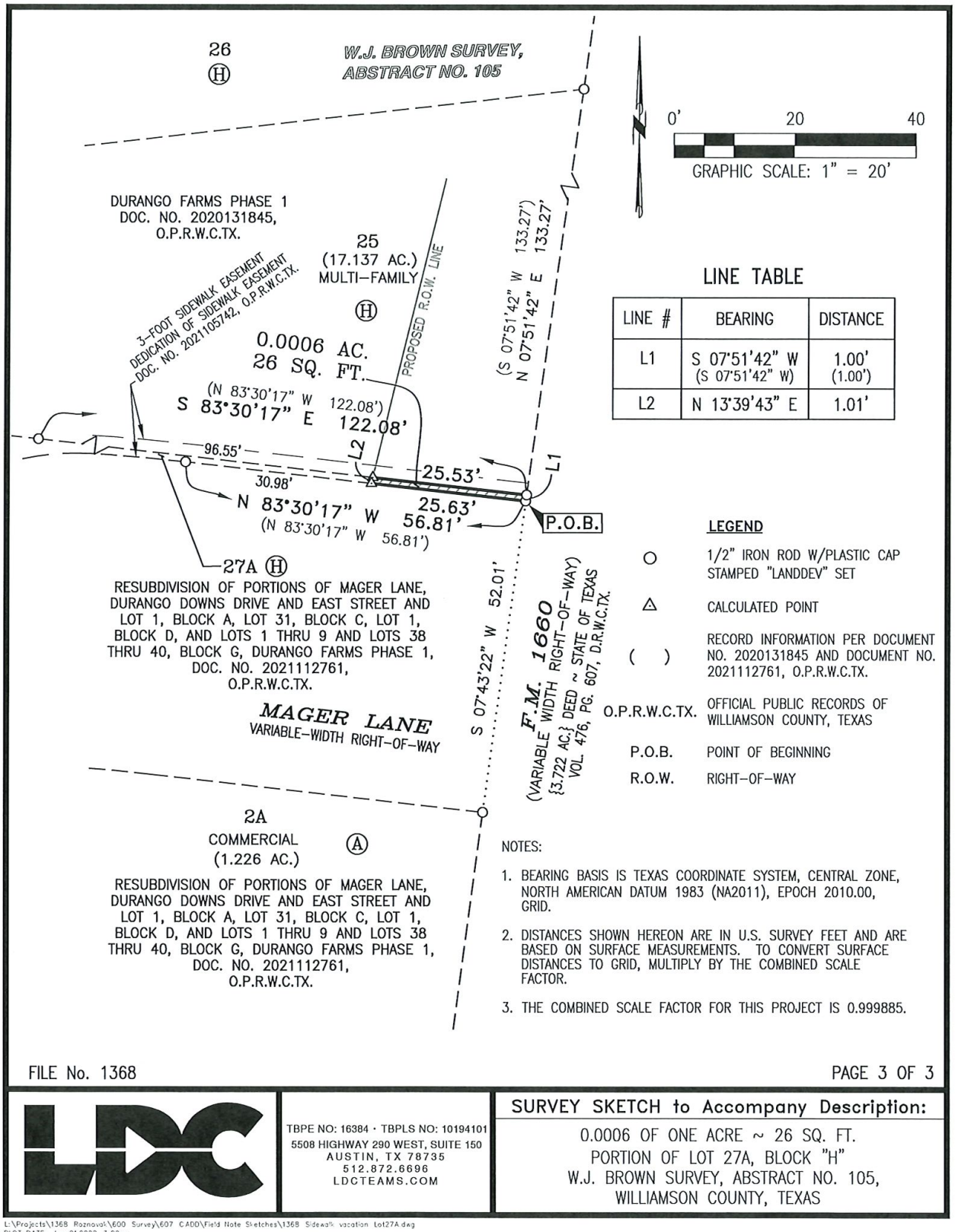
26
H
W.J. BROWN SURVEY,
ABSTRACT NO. 105
0'
20
40
GRAPHIC SCALE: 1" = 20'
DURANGO FARMS PHASE 1
DOC. NO. 2020131845,
O.P.R.W.C.TX.
25
(17.137 AC.)
MULTI-FAMILY
H
3-FOOT SIDEWALK EASEMENT
DEDICATION OF SIDEWALK EASEMENT
DOC. NO. 2021105742, O.P.R.W.C.TX.
PROPOSED R.O.W. LINE
(S 07°51'42" W 133.27')
N 07°51'42" E 133.27'
0.0006 AC.
26 SQ. FT.
(N 83°30'17" W 122.08')
S 83°30'17" E 122.08'
L2
96.55'
30.98'
25.53'
L1
N 83°30'17" W 25.63'
56.81'
(N 83°30'17" W 56.81')
P.O.B.
27A H
RESUBDIVISION OF PORTIONS OF MAGER LANE,
DURANGO DOWNS DRIVE AND EAST STREET AND
LOT 1, BLOCK A, LOT 31, BLOCK C, LOT 1,
BLOCK D, AND LOTS 1 THRU 9 AND LOTS 38
THRU 40, BLOCK G, DURANGO FARMS PHASE 1,
DOC. NO. 2021112761,
O.P.R.W.C.TX.
MAGER LANE
VARIABLE-WIDTH RIGHT-OF-WAY
S 07°43'22" W 52.01'
F.M. 1660
(VARIABLE WIDTH RIGHT-OF-WAY)
{3.722 AC.} DEED ~ STATE OF TEXAS
VOL. 476, PG. 607, D.R.W.C.TX.
2A
COMMERCIAL
(1.226 AC.)
A
RESUBDIVISION OF PORTIONS OF MAGER LANE,
DURANGO DOWNS DRIVE AND EAST STREET AND
LOT 1, BLOCK A, LOT 31, BLOCK C, LOT 1,
BLOCK D, AND LOTS 1 THRU 9 AND LOTS 38
THRU 40, BLOCK G, DURANGO FARMS PHASE 1,
DOC. NO. 2021112761,
O.P.R.W.C.TX.
LINE TABLE
LINE # | BEARING | DISTANCE
L1 | S 07°51'42" W (S 07°51'42" W) | 1.00' (1.00')
L2 | N 13°39'43" E | 1.01'
LEGEND
1/2" IRON ROD W/PLASTIC CAP STAMPED "LANDDEV" SET
CALCULATED POINT
( ) RECORD INFORMATION PER DOCUMENT NO. 2020131845 AND DOCUMENT NO. 2021112761, O.P.R.W.C.TX.
O.P.R.W.C.TX. OFFICIAL PUBLIC RECORDS OF WILLIAMSON COUNTY, TEXAS
P.O.B. POINT OF BEGINNING
R.O.W. RIGHT-OF-WAY
NOTES:
1. BEARING BASIS IS TEXAS COORDINATE SYSTEM, CENTRAL ZONE, NORTH AMERICAN DATUM 1983 (NA2011), EPOCH 2010.00, GRID.
2. DISTANCES SHOWN HEREON ARE IN U.S. SURVEY FEET AND ARE BASED ON SURFACE MEASUREMENTS. TO CONVERT SURFACE DISTANCES TO GRID, MULTIPLY BY THE COMBINED SCALE FACTOR.
3. THE COMBINED SCALE FACTOR FOR THIS PROJECT IS 0.999885.
FILE No. 1368
PAGE 3 OF 3
LDC
TBPE NO: 16384 · TBPLS NO: 10194101
5508 HIGHWAY 290 WEST, SUITE 150
AUSTIN, TX 78735
512.872.6696
LDCTEAMS.COM
SURVEY SKETCH to Accompany Description:
0.0006 OF ONE ACRE ~ 26 SQ. FT.
PORTION OF LOT 27A, BLOCK "H"
W.J. BROWN SURVEY, ABSTRACT NO. 105,
WILLIAMSON COUNTY, TEXAS
L:\Projects\1368 Roznovak\600 Survey\607 CADD\Field Note Sketches\1368 Sidewalk vacation Lot27A.dwg
PLOT DATE: Jan 21,2022 3:09pm

EXHIBIT B

Williamson County, Texas
W.J. Brown Survey, Abstract No. 105

0.0012 ac. ~ 51 sq. ft.
portion of esmt. to be vacated
Page 1 of 3

FIELD NOTES DESCRIPTION

DESCRIPTION OF 0.0012 OF ONE ACRE (51 SQUARE FEET) OF LAND IN THE W.J. BROWN SURVEY, ABSTRACT NO. 105, WILLIAMSON COUNTY, TEXAS; BEING A PORTION OF LOT 25, BLOCK H, DURANGO FARMS PHASE 1, A SUBDIVISION ACCORDING TO THE PLAT OR MAP OF RECORD IN DOCUMENT NO. 2020131845, OFFICIAL PUBLIC RECORDS OF WILLIAMSON COUNTY, TEXAS, AND ALSO, SAID 0.0012 OF ONE ACRE (51 SQUARE FEET) OF LAND BEING A PORTION OF A THREE FOOT WIDE SIDEWALK EASEMENT AS DEPICTED ON EXHIBIT "B" IN THE DEDICATION OF SIDEWALK EASEMENT RECORDED IN DOCUMENT NO. 2021105742, OFFICIAL PUBLIC RECORDS OF WILLIAMSON COUNTY, TEXAS; SAID 0.0012 OF ONE ACRE (51 SQUARE FEET) OF LAND, AS SURVEYED BY LANDDEV CONSULTING, LLC AND SHOWN ON THE ACCOMPANYING SKETCH, BEING MORE PARTICULARLY DESCRIBED BY METES AND BOUNDS AS FOLLOWS:

COMMENCING at a ½-inch iron rod with a plastic cap stamped "LANDDEV" set in the intersecting west right-of-way line of F.M. 1660, a variable-width right-of-way and the north right-of-way line of Mager Lane, a variable-width right-of-way, as shown on the Resubdivision of portions of Mager Lane, Durango Downs Drive and East Street and Lot 1, Block A, Lot 31, Block C, Lot 1, Block D, and Lots 1 thru 9 and Lots 38 thru 40, Block G, Durango Farms Phase 1, a subdivision according to the plat or map of record in Document 2021112761, Official Public Records of Williamson County, Texas, in the west line of a certain called 3.722 acre tract of land described in the deed to the State of Texas of record in Volume 476, Page 607, Deed Records of Williamson County, Texas, for the eastern terminus of the south line of the said 3' wide sidewalk easement, for the southeast corner of Lot 27A, Block H, said Resubdivision;

THENCE N 07°51'42" E, with the west right-of-way line of said F.M. 1660, with the west line of the said 3.722 acre tract, with the east line of said Lot 27A, Block H, said Resubdivision, with the eastern terminus of the said 3' wide sidewalk easement, a distance of 1.00 foot to the northeast corner of said Lot 27A, Block H, said Resubdivision, same being the most southerly southeast corner of said Lot 25, Block H, Durango Farms Phase 1, for the southeast corner and **POINT OF BEGINNING** of the tract described herein;

THENCE N 83°30'17" W, leaving the west right-of-way line of F.M. 1660, leaving the west line of the said 3.722 acre tract, crossing the said 3' wide sidewalk easement, with the south line of said Lot 25, Block H, Durango Farms Phase 1, with the north line of said Lot 27A, Block H, said Resubdivision, with the south line of the tract described herein, a distance of 25.53 feet to a calculated point for the southwest corner of the tract described herein, from which a ½-inch iron rod with a plastic cap stamped "LANDDEV" set for a point-of-curvature in the south line of said Lot 25, Block H, Durango Farms Phase 1 and the north line of said Lot 27A, Block H, said Resubdivision bears N 83°30'17" W, a distance of 96.55 feet;

THENCE N 13°39'43" E, leaving the north line of said Lot 27A, Block H, said Resubdivision, crossing said Lot 25, Block H, Durango Farms Phase 1, continuing across the said 3' wide sidewalk easement, with the west line of the tract described herein, a distance of 2.02 feet to a calculated point in the north line of the said 3' wide sidewalk easement, for the northwest corner of the tract described herein;

THENCE S 83°30'17" E, continuing across said Lot 25, Block H, Durango Farms Phase 1, with the north line of the said 3' wide sidewalk easement, with the north line of the tract described herein, a distance of 25.33 feet to a calculated point in the west right-of-way line of said F.M. 1660, in the west line of the said 3.722 acre tract, and in an east line of said Lot 25, Block H, Durango Farms Phase 1, for the eastern terminus of the north line of the said 3' wide sidewalk easement, for the northeast corner of the tract described herein, from which a ½-inch iron rod with a plastic cap stamped "LANDDEV" set in the west right-of-way line of said F.M. 1660, for a common east corner of Lot 25 and Lot 26, Block H, said Durango Farms Phase 1, bears N 07°51'42" E, a distance of 131.27 feet;

THENCE S 07°51'42" W, with the west right-of-way line of said F.M. 1660, with the west line of the said 3.722 acre tract, with an east line of said Lot 25, Block H, Durango Farms Phase 1, with the eastern terminus of the said 3' wide sidewalk easement, with the east line of the tract described herein, a distance of 2.00 feet to **POINT OF BEGINNING** and containing 0.0012 of one acre (51 square feet) of land, more or less.

EXHIBIT B

Williamson County, Texas
W.J. Brown Survey, Abstract No. 105

0.0012 ac. ~ 51 sq. ft.
portion of esmt. to be vacated
Page 2 of 3

BEARING BASIS: Texas Coordinate System, Central Zone, NAD83, Grid.

THE STATE OF TEXAS

KNOW ALL MEN BY THESE PRESENTS:

COUNTY OF TRAVIS

That I, Ernesto Navarrete, a Registered Professional Land Surveyor, do hereby certify that the above description is true and correct to the best of my knowledge and belief and that the parcel of land described herein is based upon a survey performed upon the ground under my direct supervision during the month of July, 2021.

WITNESS MY HAND AND SEAL at Austin, Travis County, Texas, this 21st day of January 2022 A.D.

LANDDEV CONSULTING, LLC
5508 Highway 290 West, Suite 150
Austin, Texas 78735

Ernesto Navarrete
Registered Professional Land Surveyor
No. 6642 – State of Texas

STATE OF TEXAS
REGISTERED
ERNESTO NAVARRETE
6642
PROFESSIONAL
LAND SURVEYOR

EXHIBIT B

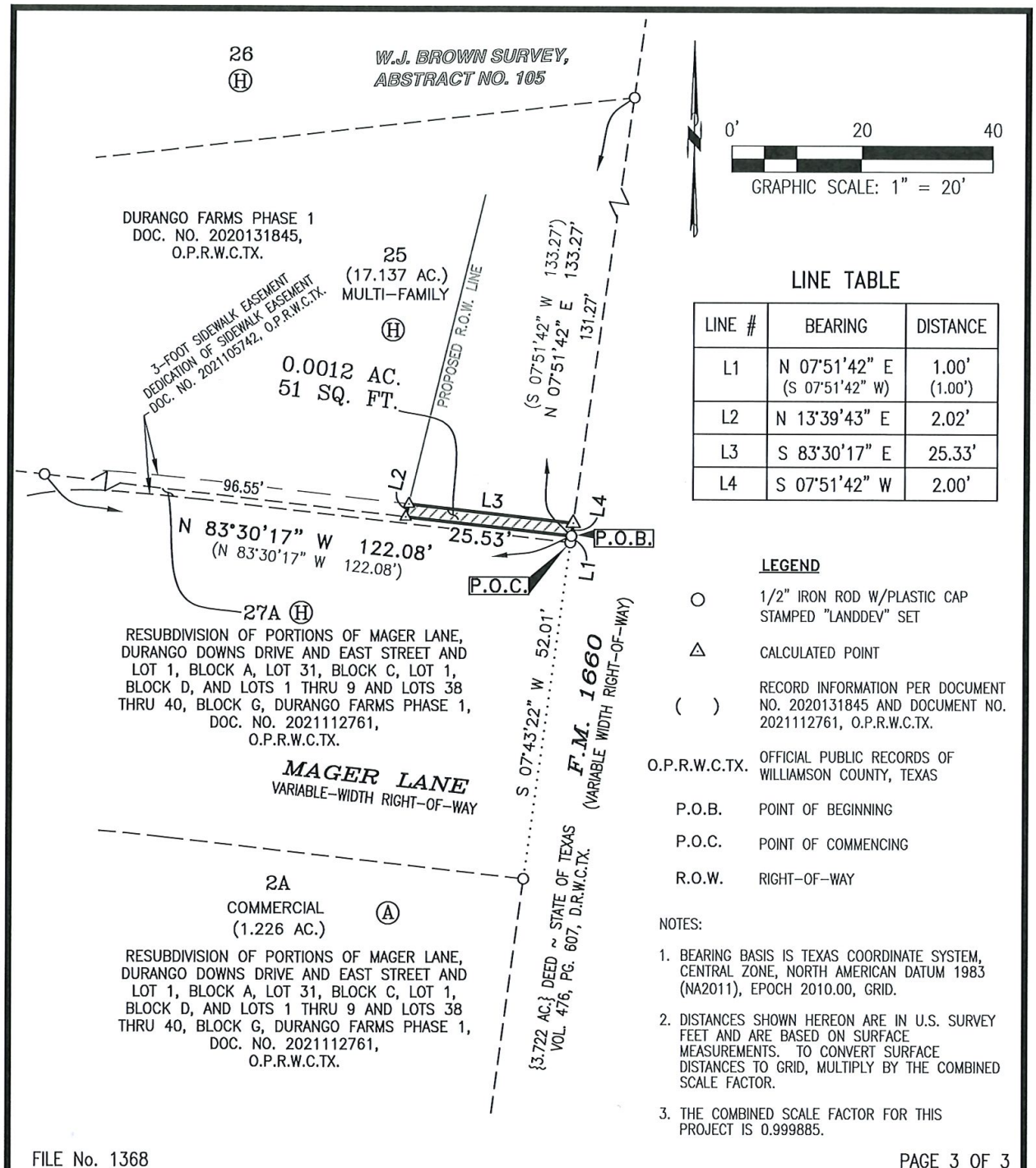

LINE TABLE

LINE #	BEARING	DISTANCE
L1	N 07°51'42" E (S 07°51'42" W)	1.00' (1.00')
L2	N 13°39'43" E	2.02'
L3	S 83°30'17" E	25.33'
L4	S 07°51'42" W	2.00'

LEGEND

○	1/2" IRON ROD W/PLASTIC CAP STAMPED "LANDDEV" SET
△	CALCULATED POINT
( )	RECORD INFORMATION PER DOCUMENT NO. 2020131845 AND DOCUMENT NO. 2021112761, O.P.R.W.C.TX.
O.P.R.W.C.TX.	OFFICIAL PUBLIC RECORDS OF WILLIAMSON COUNTY, TEXAS
P.O.B.	POINT OF BEGINNING
P.O.C.	POINT OF COMMENCING
R.O.W.	RIGHT-OF-WAY

NOTES:

1. BEARING BASIS IS TEXAS COORDINATE SYSTEM, CENTRAL ZONE, NORTH AMERICAN DATUM 1983 (NA2011), EPOCH 2010.00, GRID.
2. DISTANCES SHOWN HEREON ARE IN U.S. SURVEY FEET AND ARE BASED ON SURFACE MEASUREMENTS. TO CONVERT SURFACE DISTANCES TO GRID, MULTIPLY BY THE COMBINED SCALE FACTOR.
3. THE COMBINED SCALE FACTOR FOR THIS PROJECT IS 0.999885.

FILE No. 1368

PAGE 3 OF 3

LDC

TBPE NO: 16384 · TBPLS NO: 10194101
5508 HIGHWAY 290 WEST, SUITE 150
AUSTIN, TX 78735
512.872.6696
LDCTEAMS.COM

SURVEY SKETCH to Accompany Description:

0.0012 OF ONE ACRE ~ 51 SQ. FT.
PORTION OF LOT 25, BLOCK "H"
W.J. BROWN SURVEY, ABSTRACT NO. 105,
WILLIAMSON COUNTY, TEXAS

L:\Projects\1368 Roznovak\600 Survey\607 CADD\Field Note Sketches\1368 Sidewalk vacation Lot25.dwg
PLOT DATE: Jan 21,2022 2:40pm

Return to the following after recording:

HNTB Corporation
c/o Nikki W Fitzpatrick, ROW Manager
101 E Old Settlers Blvd, Ste 225
Round Rock, TX 78664

AGENDA ITEM REPORT
8.11.

To:	City Council
Subject:	Consideration and possible action on Resolution No. R-2022-062 approving a Shared Use Path Agreement with the Oncor Electric Delivery Company, LLC, Vantage at Hutto, LLC, and MA Durango Farms, LLC, for the City to operate and maintain a Shared Use Path on an Oncor easement which is recorded in Volume 233, Page 447 of the Deed Records of Williamson County, and as modified in Document Number 2020007624 of the Official Public Records of Williamson County. (Legal)
Meeting:	Thursday, June 2, 2022
Department:	Legal /
Staff Contact:	

BACKGROUND INFORMATION:

The City of Hutto and TxDOT require improvements to the intersection of FM 1660 and Mager Lane as condition of final acceptance of the Durango Farms development. The developer has designed and will construct improvements to FM 1660 that include signal modifications, right turn lanes and new wide sidewalk (shared use path). In order to accommodate all of the project elements, a portion of the existing shared use path on FM 1660 will be relocated outside the existing TxDOT right-of-way. The developer is donating right-of-way to the City of Hutto to accommodate construction of the proposed shared use path. In addition, the proposed shared use path crosses an existing Oncor electric easement in the immediate vicinity of the intersection of FM 1660 and Mager Lane. An agreement between the City of Hutto and Oncor is needed to allow encroachment of the shared use path within the existing Oncor transmission easement.

SUMMARY OF REQUEST:

STAFF REVIEW:

FINANCIAL IMPACT:

POLICY IMPLICATIONS:

AGENDA ITEM REPORT
8.11.

ATTACHMENTS:

ENCROACHMENT ON EASEMENT

WHEREAS, **Oncor Electric Delivery Company LLC ("Oncor")**, is the owner of an easement in Williamson County, Texas, which is recorded in Volume 233, Page 447 of the Deed Records of Williamson County, and as modified in Document Number 2020007624 of the Official Public Records of Williamson County, Texas **("Easement");** and

WHEREAS, **Vantage at Hutto, LLC** and **MA Durango Farms, LLC ("Constructor"),** desires permission to construct a ten (10) foot Shared Use Path (SUP) and the **City of Hutto, a Texas home-rule municipal corporation situated in Williamson County ("User")** desires permission to operate and maintain access of said ten (10) foot Shared Use Path (SUP), adjacent to the new southbound right-turn lane onto west Mager Lane, **("Encroaching Facility")** within the area or boundaries of the Easement **("Easement Area").**

NOW, THEREFORE, in consideration of the mutual covenants contained herein, and other good and valuable consideration, the receipt and sufficiency of which is hereby acknowledged, Oncor, Constructor, and User do hereby agree as follows:

1. **Location of Encroaching Facility.** Constructor may locate the Encroaching Facility in the Easement Area, but only as described and shown on the attached drawings marked **Exhibit "A1"** and **Exhibit "A2"** and incorporated herein. Constructor may not relocate the Encroaching Facility within the Easement Area without the consent and approval of Oncor, which consent, and approval shall be at Oncor's sole discretion. Constructor and User acknowledges and agrees that Oncor holds easement rights on the Easement Area; therefore, Constructor and User shall obtain whatever rights and permission, other than Oncor's, that are necessary.

2. **Restrictions on Use of Easement Area.** Constructor shall use only so much of the Easement Area as may be necessary to construct, and User shall use only so much of the Easement area as may be necessary to maintain and repair, the Encroaching Facility. Constructor and User shall, at its own cost and expense, comply with all applicable laws, including but not limited to existing zoning ordinances, governmental rules and regulations enacted or promulgated by any governmental authority and shall promptly execute and fulfill all orders and requirements imposed by such governmental authorities for the correction, prevention and abatement of nuisances in or upon or connected with said Encroaching Facility. At the conclusion of any construction, Constructor shall remove all debris and other materials from the Easement Area and restore the Easement Area to the same condition it was in prior to the commencement of Constructor's construction thereon or in proximity thereto.

   Constructor and User shall not place trash dumpsters, toxic substances or flammable material in the Easement Area. Further, if the Easement Area has transmission or distribution facilities located thereon, Constructor and User shall not place upon the Easement Area any improvements, including but not limited to, buildings, light standards, fences (excluding barriers installed around transmission towers, if applicable), shrubs, trees or signs unless approved in advance in writing by Oncor. Additional general construction limitations on encroachments are described and listed in **Exhibit "B",** attached hereto and by reference made a part hereof.

3. **Maintenance of Encroaching Facility.** Constructor is in process of donating the portion of right-of-way the Encroaching Facility will be constructed onto/upon to the User, and the User, at User's sole expense, shall maintain and operate the Encroaching Facility. Oncor will not be responsible for any costs of construction, reconstruction, operation, maintenance or removal of City's Encroaching Facility.

4. **Risk and Liability.** User assumes all risks and liability resulting or arising from or relating to User's use, the existing condition or location, or existing state of maintenance, repair or operation of the Easement Area. It is further agreed that Oncor shall not be liable for any damage to the Encroaching Facility as a result of Oncor's use or enjoyment of its Easement. Any Oncor property damaged or destroyed by User, or its agents, employees, invitees, contractors or subcontractors shall be repaired or replaced by Oncor at User's expense and payment is due upon User's receipt of an invoice from Oncor.

5. **Indemnification.** To the extent allowable by Texas law, User agrees to defend, indemnify and hold harmless Oncor, its officers, agents and employees from and against any and all claims, demands, causes of action, loss, damage, liabilities, costs and expenses (including attorney's fees and court costs) of any and every kind or character, known or unknown, fixed or contingent, for personal injury (including death), property damage or other harm for which recovery of damages is sought or suffered by any person or persons, including claims based on strict liability, arising out of or in connection with User's actions or omissions or the actions or omissions of its officers, agents, associates, employees, contractors or subcontractors or the actions or omissions of any other person entering onto the Easement Area or the Encroaching Facility, **including the negligent actions or omissions of Oncor**, when such actions or omissions relate to User's use of the Easement Area.

6. **High Voltage Restrictions.** Use of draglines or other boom-type equipment in connection with any work to be performed on the Easement Area by Constructor or User, its employees, agents, invitees, contractors or subcontractors must comply with Chapter 752, Texas Health and Safety Code, the National Electric Safety Code and any other applicable safety or clearance requirements. Notwithstanding anything to the contrary herein, in no event shall any equipment be within fifteen (15) feet of the Oncor 138,000-volt (or less) power lines or within twenty (20) feet of the Oncor 345,000-volt power lines situated on the aforesaid property. Constructor or User must notify the **Region Transmission Office at 903-243-1011** 48 hours prior to the beginning of any work on the Easement Area.

7. **Removal by Oncor.** If at any time in the future, the Encroaching Facility, in the sole judgment of Oncor, interferes with Oncor's use or enjoyment of its easement rights, Oncor shall have the right to remove said Encroaching Facility. Notwithstanding the foregoing, Oncor shall only remove the portion of the Encroaching Facility necessary for Oncor to pursue its ordinary business practices and/or for additional utility purposes. Oncor shall notify User in writing that within 90 days the Encroaching Facility must be removed at User's sole cost. If at the end of the 90-day period the Encroaching Facility has not been removed, Oncor may remove it, at User's expense. Oncor will not be responsible, nor will compensation be paid, for damages incurred by such removal, including, but not limited to, damages for loss of use of the Encroaching Facility or business interruption. However, in an emergency, Oncor shall have the right to immediately remove the Encroaching Facility. If the Encroaching Facility is removed, Oncor will not unreasonably withhold consent for User to relocate the Encroaching Facility within the Easement Area.

8. **Default and Termination.** It is understood and agreed that, in case of default by Constructor or User or its agents in any of the terms and conditions herein stated and such default continues for a period of ten (10) days after Oncor notifies Constructor and User of such default in writing, Oncor may at its election forthwith terminate this agreement and upon such termination all of Constructor's and User's rights hereunder shall cease and come to an end. This agreement shall also terminate upon the abandonment of the Encroaching Facility.

This agreement shall extend to and be binding upon Constructor and User and its successors and assigns and is not to be interpreted as a waiver of any rights held by Oncor under its Easement.

Executed this ____ day of _____, 2022.

ONCOR:

Oncor Electric Delivery Company, LLC

By: _____
Jill L. Alvarez, P.E., M.S.E.
Attorney-In-Fact

CONSTRUCTOR:

Vantage at Hutto, LLC

By: _____
David Starr, President

CONSTRUCTOR:

MA Durango Farms, LLC

By: _____
Wyatt Henderson, Manager

USER:

CITY OF HUTTO, a Texas home-rule municipal corporation situated in Williamson County

Executed by and approved for the City of Hutto for the purpose and effect of activating and/or carrying out the orders, established policies or work programs heretofore approved and authorized by the City of Hutto.

By: _____
(signature)

Printed Name and Title: _____

Acknowledgment

State of Texas
County of _____

BEFORE ME, the undersigned authority, on this day personally appeared **Jill L. Alvarez**, as the **Attorney-In-Fact** of **Oncor Electric Delivery Company, LLC**, known to me to be the person whose name is subscribed to the foregoing instrument and acknowledged to me that he/she executed the same for the purposes and consideration there expressed, in the capacity therein stated and he/she is authorized to do so.

GIVEN UNDER MY HAND AND SEAL OF OFFICE this _____ day of _____ _____, 20___.

[Notary Seal]

_____
Notary Public in and for the State of Texas

_____
Printed Name of Notary Public

My commission expires: _____

Acknowledgment

State of Texas
County of _____

BEFORE ME, the undersigned authority, on this day personally appeared **David Starr**, as the **President** of **Vantage at Hutto, LLC**, known to me to be the person whose name is subscribed to the foregoing instrument and acknowledged to me that he/she executed the same for the purposes and consideration there expressed, in the capacity therein stated and he/she is authorized to do so.

GIVEN UNDER MY HAND AND SEAL OF OFFICE this _____ day of _____ _____, 20___.

[Notary Seal]

_____
Notary Public in and for the State of Texas

_____
Printed Name of Notary Public

My commission expires: _____

Acknowledgment

State of Texas
County of _____

BEFORE ME, the undersigned authority, on this day personally appeared **Wyatt Henderson**, as the **Manager of MA Durango Farms, LLC**, known to me to be the person whose name is subscribed to the foregoing instrument and acknowledged to me that he/she executed the same for the purposes and consideration there expressed, in the capacity therein stated and he/she is authorized to do so.

GIVEN UNDER MY HAND AND SEAL OF OFFICE this _____ day of _____ _____, 20___.

[Notary Seal]

_____
Notary Public in and for the State of Texas

_____
Printed Name of Notary Public

My commission expires: _____

Acknowledgment

State of Texas
County of _____

BEFORE ME, the undersigned authority, on this day personally appeared _____, as the _____ of the **City of Hutto, a Texas home-rule municipal corporation situated in Williamson County**, known to me to be the person whose name is subscribed to the foregoing instrument and acknowledged to me that he/she executed the same for the purposes and consideration there expressed, in the capacity therein stated and he/she is authorized to do so.

GIVEN UNDER MY HAND AND SEAL OF OFFICE this _____ day of _____ _____, 20___.

[Notary Seal]

_____
Notary Public in and for the State of Texas

_____
Printed Name of Notary Public

My commission expires: _____

EXHIBIT "A1"

PDF Filename: 0003 - FM 1660 & MAGER LANE PROJECT LAYOUT 1 OF 1.pdf

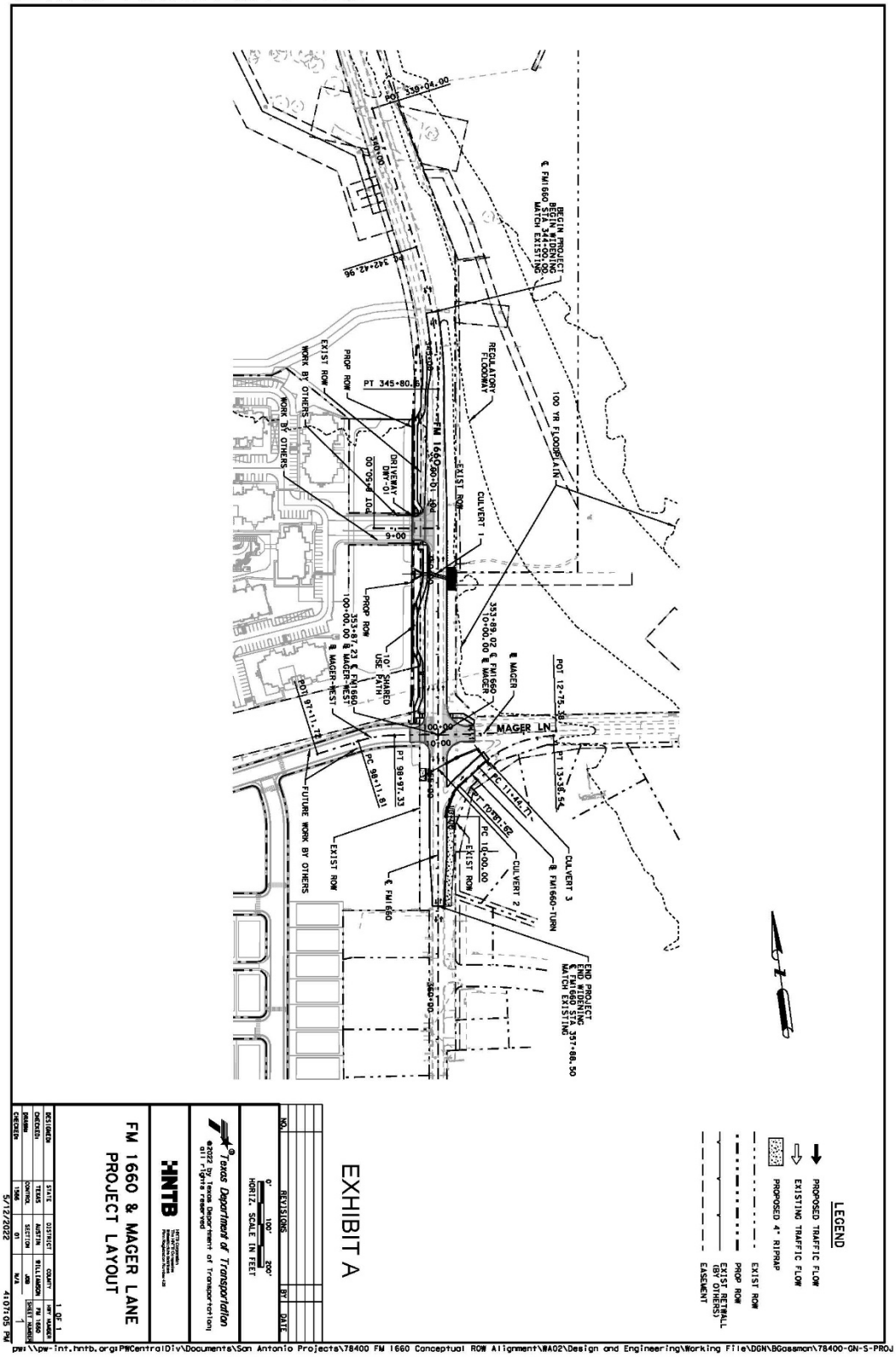

EXHIBIT "A2"

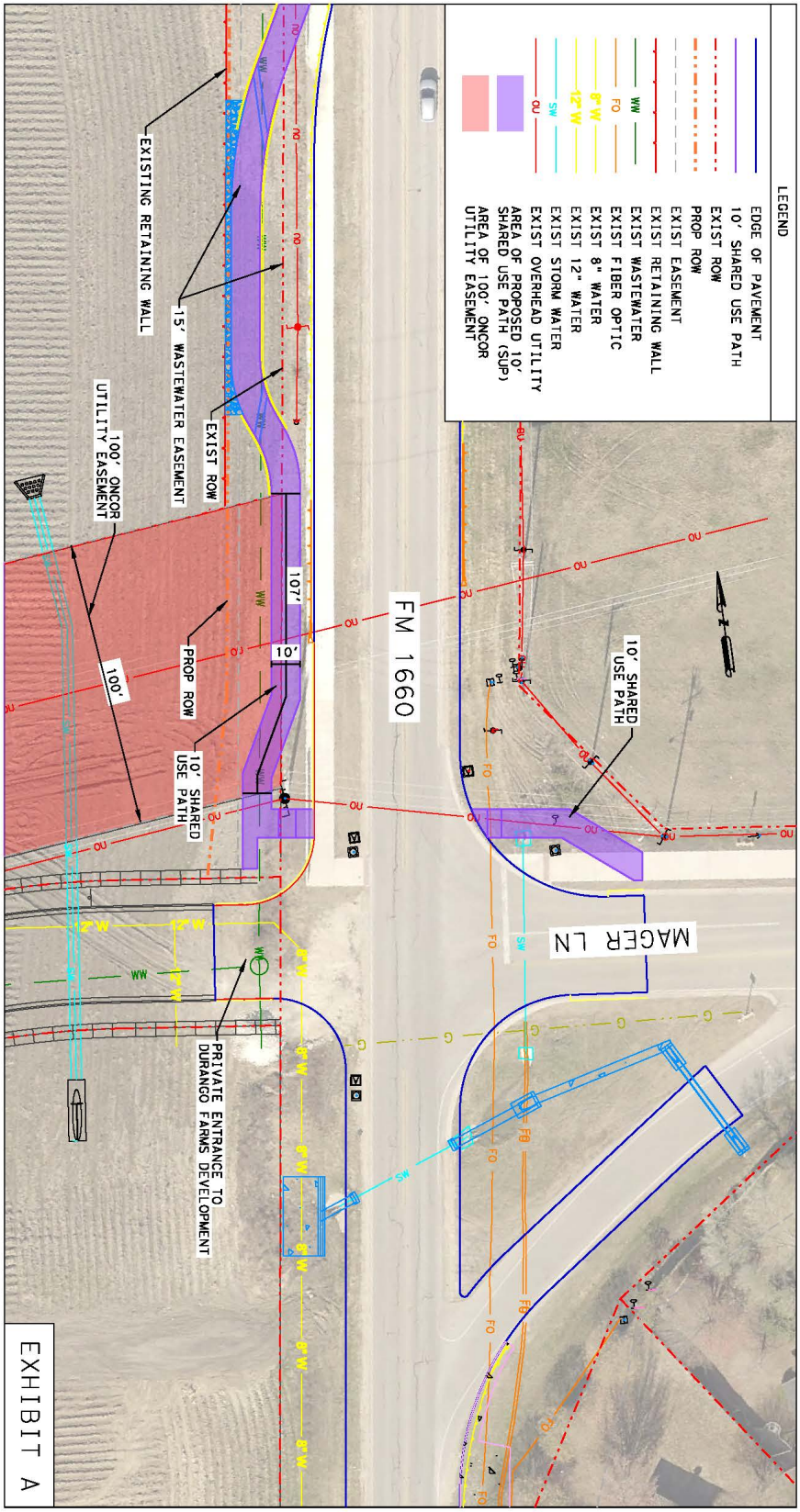
LEGEND
EDGE OF PAVEMENT
10' SHARED USE PATH
EXIST ROW
PROP ROW
EXIST EASEMENT
EXIST RETAINING WALL
EXIST WASTEWATER
EXIST FIBER OPTIC
EXIST 8" WATER
EXIST 12" WATER
EXIST STORM WATER
EXIST OVERHEAD UTILITY
AREA OF PROPOSED 10' SHARED USE PATH (SUP)
AREA OF 100' ONCOR UTILITY EASEMENT
FM 1660
MAGER LN
10' SHARED USE PATH
EXIST ROW
15' WASTEWATER EASEMENT
EXISTING RETAINING WALL
100' ONCOR UTILITY EASEMENT
107'
10'
100'
PROP ROW
10' SHARED USE PATH
PRIVATE ENTRANCE TO DURANGO FARMS DEVELOPMENT
EXHIBIT A

2

CONSTRUCTION LIMITATIONS ON
ONCOR ELECTRIC DELIVERY COMPANY RIGHT-OF-WAY

EXHIBIT "B"

1. You are notified, and should advise your employees, representatives, agents and contractors, who enter the property that they will be working in the vicinity of high-voltage electrical facilities and should take proper precautions, included but not limited to the following stipulations and in compliance, at all times, with Chapter 752, V.T.C.A., Health & Safety Code.

2. Blasting is not to be permitted on Oncor right-of-way or under Oncor lines.

3. Construction on electric transmission line easements acquired by Oncor after January 1, 2003 shall comply with the requirements of Public Utility Commission Substantive Rules §25.101, as amended from time to time.

4. No crossing less than 45 degrees to the centerline of the right-of-way.

5. Grading will be done in order to leave the right-of-way as near as possible to present condition. Spoil dirt will be removed from the right-of-way and no trash is to be left on right-of-way. Slopes shall be graded so that trucks can go down the right-of-way when required and such that the slopes can be mechanically maintained.

6. Equipment and materials will not be stored on the right-of-way during construction without written approval of the Supervisor of Regional Transmission.

7. Street or road crossings are to be based on drawings submitted. Any change in alignment or elevation will be resubmitted for approval.

8. No signs, lights or guard lights will be permitted on the right-of-way.

9. Power line safety equipment operations: hazard assessment and precautions inside the work zone area must be performed and in compliance with OSHA Standard §1926.1408 at all times. Equipment shall not be placed within fifteen (15) feet of the Oncor 138,000-volt (or less) power lines or within twenty (20) feet of the Oncor 345,000-volt power lines.

10. Any pre-approved fencing will not exceed eight (8) feet in height, and if metal in nature, will be grounded, at ten (10) feet intervals, with an appropriate driven ground. Gates should be at least sixteen (16) feet in width to allow Oncor access to the right-of-way.

11. No dumpsters will be allowed on Oncor right-of-way or fee-owned property.

12. Draglines will not be used under the line or on Oncor right-of-way.

13. The existing grade shall not be disturbed, excavated, or filled within twenty-five (25) feet of the nearest edge of any Oncor transmission structure (tower, pole, guy wire, etc.).

14. Right-of-way will be protected from washing and erosion by Oncor approved method before any permits are granted. No discharging of water will be allowed within any portion of the right-of-way. Drainage facilitation will not be allowed to discharge into/onto Oncor right-of-way.

15. No obstruction shall be installed on the right-of-way that would interfere with access to Oncor structures or prevent mechanical maintenance.

16. Before any work is done under Oncor lines or by Oncor structures notify the **Region Transmission Department, 903-243-1011**.

17. No hazardous materials will be stored on the right-of-way.

18. For purposes of this document, "Hazardous Materials" means and includes those substances, including, without limitation, asbestos-containing material containing more than one percent (1%) asbestos by weight, or the group of organic compounds known as polychlorinated biphenyls, flammable explosives, radioactive materials, chemicals known to cause cancer or reproductive toxicity and includes any items included in the definition of hazardous or toxic waste, materials or substances under any Hazardous Material Law. "Hazardous Material Laws" collectively means and includes any present and future local, state and federal law relating to the environment and environmental conditions including, without limitation, the Resource Conservation and Recovery Act of 1976 (RCRA"), 42 U.S.C. §6901 et seq., the Comprehensive Environmental Response, Compensation and Liability Act of 1980, ("CERCLA"), 42 U.S.C. §§9601-9657, as amended by the Superfund Amendments and Reauthorization Act of 1986 ("SARA"), the Hazardous Material Transportation Act, 49 U.S.C. §6901 et seq., the Federal Water Pollution Control Act, 33 U.S.C. §1251, et seq., the Clean Air Act, 42 U.S.C. §741 et seq., the Clean Water Act, 33 U.S.C. §7401 et seq., the Toxic Substances Control Act, 15 U.S.C. §§6201-2629, the safe Drinking Water Act, 42 U.S.C. §§300f-330j, and all the regulations, orders, and decrees now or hereafter promulgated thereunder.

19. Brush and cut timber are not to be piled or stacked on Oncor right-of-way nor is it allowed to be burned upon or in close proximity to the conductors or towers.

20. No structures or obstructions, such as buildings, garages, barns, sheds, swimming pools, playground equipment, guard houses, etc., will be permitted on the right-of-way.

21. Landscaping on Oncor right-of-way is permitted when Oncor approves landscaping plans in writing. No lighting or sprinkler systems are allowed on the right-of-way.

22. No park or park designation will be permitted on the right-of-way.

23. Gas Pipeline Protective Barrier; Grantee, at Grantee's sole expense, shall provide one of the following protective barriers; **1)** a concrete protective barrier between the surface and the pipe that is a minimum of one (1) foot thick by one (1) food wide, if pipe is wider than one (1) foot, then width of pipe, with the top of the concrete barrier to be at least one (1) below the surface or final grade, **2)** construct the gas pipeline inside of a proper protective steel casing, **3)** where electric facilities are located above ground, install the pipeline a minimum of ten (10) feet below the ground surface, or **4)** where electric facilities are located below ground, install the pipeline at a depth that provides for a minimum of a ten (10) foot clearance between the pipeline and the underground electric facilities.

24. No fire hydrants or manholes will be permitted within the right-of-way.

25. Any drainage feature that allows water to pond, causes erosion, directs stormwater toward the right-of-way or limits access to or around Oncor's facilities is prohibited. Drainage facilitation will not be allowed to discharge into/onto Oncor right-of-way.

26. No boring pits or other type of pits will be permitted within the right-of-way.

AGENDA ITEM REPORT
8.12.

To:	City Council
Subject:	Consideration and possible action on Resolution No. R-2022-063 approving the 2022 Amended and Restated Interlocal Agreement between the City of Hutto, Hutto Independent School District, and Texas State Technical College to clarify payment obligations and responsibilities between the City and TSTC. (Legal)
Meeting:	Thursday, June 2, 2022
Department:	Legal /
Staff Contact:	

BACKGROUND INFORMATION:

This Amended and Restated Agreement replaces the 2011 Interlocal Agreement, having an effective date of April 7, 2011, and the subsequent 2019 Interlocal Agreement dated June 5, 2019, between the City, the Hutto Economic Development Corporation, the HISD, and TSTC, related to East Williamson County Higher Education Center. This proposed Agreement approves an updated payment schedule and clarifies the responsibilities of the City and TSTC. This amendment does not affect the rights and responsibilities between TSTC and HISD.

SUMMARY OF REQUEST:

STAFF REVIEW:

FINANCIAL IMPACT:

POLICY IMPLICATIONS:

ATTACHMENTS:

RESOLUTION NO. R-2022-___

A RESOLUTION OF THE CITY OF HUTTO, TEXAS, APPROVING THE 2022 AMENDED AND RESTATED INTERLOCAL AGREEMENT BETWEEN THE CITY OF HUTTO, HUTTO INDEPENDENT SCHOOL DISTRICT, AND TEXAS STATE TECHNICAL COLLEGE; AUTHORIZING THE CITY MANAGER TO EXECUTE THE AGREEMENT; AND PROVIDING AN EFFECTIVE DATE

WHEREAS, on December 15, 2011, the City and the YMCA entered into a Lease Agreement regarding the lease of a building constructed by the City for recreational purposes and a management agreement regarding such building; and

WHEREAS, the City and HISD strongly encourage the establishment of EWCHEC in Hutto, Texas; and

WHEREAS, in order to facilitate the financing of EWCHEC, the Parties have cooperated in the creation of the East Williamson County Higher Education Corporation (EWCHEC), pursuant to Chapter 51.092 of the Texas Educational Code; and

WHEREAS, the Parties desire to amend the Original Interlocal Agreement, to establish certain performance standards to indicate how education opportunities for residents of the area will be met and improved; and

WHEREAS, the City Council desires to approve the Second Amendment to the Management Agreement between the City of Hutto and YMCA of Greater Williamson County, and authorize the City Manager to execute the Agreement (the "Agreement") attached as Exhibit "A."

NOW, THEREFORE, BE IT RESOLVED BY THE CITY COUNCIL OF THE CITY OF HUTTO, TEXAS, THAT:

SECTION 1: The findings set forth in the recitals of this Resolution are hereby found to be true and correct and are hereby adopted as findings of the City Council and are incorporated into the body of this Resolution as if fully set forth herein.

SECTION 2: The Hutto City Council hereby approves and authorizes the City Manager to execute the Amended and Restated Interlocal Agreement, attached as Exhibit "A", a copy of the same being attached hereto and incorporated herein for all purposes.

SECTION 3: The City Council hereby finds and declares that written notice of the date, hour, place, and subject of the meeting at which this Resolution was adopted was posted and that such meeting was open to the public as required by law at all times during which this Resolution and the subject matter hereof were discussed, considered and formally acted upon, all as required by the Open Meetings Act, Chapter 551, Texas Government Code, as amended.

RESOLVED this 2nd day of June, 2022.

_____
Mike Snyder, Mayor

ATTEST:

_____
Angela Walton, City Secretary

APPROVED AS TO FORM:

By:_____
Cristian Rosas-Grillet, Assistant City Attorney

EXHIBIT “A”

2022 AMENDED AND RESTATED INTERLOCAL AGREEMENT
BETWEEN
THE CITY OF HUTTO,
HUTTO INDEPENDENT SCHOOL DISTRICT, AND
TEXAS STATE TECHNICAL COLLEGE

THIS 2022 AMENDED AND RESTATED INTERLOCAL AGREEMENT ("Agreement") is made by and between the City of Hutto, Texas ("City"), the Hutto Independent School District (the "HISD"), and Texas State Technical College ("TSTC), acting by and through their respective authorized officers, (jointly referred to herein as the "Parties"), and replaces the 2011 Interlocal Agreement, having an effective date of April 7, 2011, and subsequent 2019 Interlocal Agreement dated June 5, 2019, (jointly referred to herein as the "Original Interlocal Agreement") between the City, the Hutto Economic Development Corporation (the "HEDC"), the HISD, and TSTC.

RECITALS:

WHEREAS, Government Code, Chapter 791, the Texas Interlocal Cooperation Act, provides that any one or more public agencies may contract with each other for the performance of governmental functions or services for the promotion and protection of the health, safety, and welfare of the inhabitants of this State and the mutual benefits of the Parties; and

WHEREAS, Temple College ("Temple") and TSTC constructed the first 112,000 square foot educational facility on a site depicted on **Exhibit A** as Building 1, attached hereto and incorporated hereinafter referred to as East Williamson County Higher Education Center ("EWCHEC"); and

WHEREAS, in order for Temple and TSTC to locate and construct EWCHEC in Hutto, Texas at the site depicted in **Exhibit A**, TSTC, as facility owner, requires a commitment from the City and HISD to contribute a certain collective sum of money on an annual basis to offset certain EWCHEC costs; and

WHEREAS, the City and HISD strongly encourage the establishment of EWCHEC in Hutto, Texas; and

WHEREAS, in order to facilitate the financing of EWCHEC, the Parties have cooperated in the creation of the East Williamson County Higher Education Corporation (EWCHEC), pursuant to Chapter 51.092 of the Texas Educational Code; and

WHEREAS, effective July 13, 2021, TSTC and HEDC entered into a Performance Agreement, which amended and restated their rights and obligations under the Original Interlocal Agreement; and

WHEREAS, the Parties wish to clarify, amend, and restate certain provisions of the Original Interlocal Agreement to establish certain performance standards to indicate how education opportunities for residents of the area will be met and improved; and

NOW, THEREFORE, in consideration of the foregoing and the mutual promises herein contained, and for the good and valuable consideration, the receipt and sufficiency of which is hereby acknowledged, the parties hereby covenant and agree as follows:

SECTION 1.

This Agreement is entered into by and between the Parties hereto to restate and amend the provisions of the Original Interlocal Agreement pursuant to the authority contained in the Interlocal Cooperation Act, Government Code Section 791 et seq. The provisions of Chapter 791 of the Government Code are incorporated in this Agreement and this Agreement shall be interpreted in accordance with this Act.

SECTION 2.

The Recitals listed herein are hereby adopted by the Parties as true and correct.

SECTION 3.

~~As conditioned herein, t~~The City of Hutto hereby commits to continue to pay to TSTC the sum of **ONE HUNDRED AND TWENTY-FIVE THOUSAND AND NO/100 DOLLARS ($125,000)** on or before the first day of March of each year for 25 years, beginning in 2012 and ending 2036. The City and TSTC agree that payments under the Original Interlocal Agreement for the years 2012 through _____ have been made by or on behalf of the City. The City acknowledges TSTC performed under the Original Interlocal Agreement for the years 2012 through _____. The City shall make the payments to TSTC under this Agreement pursuant to the Payment Schedule attached hereto as **Exhibit C,** which includes the outstanding payments under the Original Interlocal Agreement for the years _____, and satisfies any City obligations under the Original Interlocal Agreement for those years. ~~The Parties agree that future payments under this Agreement by the City shall be conditioned upon TSTC meeting certain performance standards as set out in **Exhibit B-1** to this Agreement.~~

TSTC agrees to provide the City a written report by _____ of each year of this Agreement, attested to by a local authorized representative that has the authority to bind TSTC and shall provide annual facility expenditure and debt service payment summary for the previous academic year detailing the date and amount of annual debt service payments. TSTC further agrees to present the report and summary of TSTC's operations to the City Council by _____ of each year.

The City, upon receipt of the summary described in this Section, by _____ of each year of this Agreement, shall pay TSTC in accordance with Exhibit C on or before the first day of ___ of the year the report was submitted. If the City does not receive the summary described in this Section, by _____ of each year, no payment shall be made for that year of the Agreement.

SECTION 4.

As conditioned herein, the HISD hereby commits to pay to the TSTC the sum of **ONE HUNDRED AND TWENTY-FIVE THOUSAND AND NO/100 DOLLARS ($125,000)** on or before the first day of March of each year for 25 years, beginning in 2012 and ending 2036. The Parties agree that future payments under this Agreement by HISD shall be conditioned upon TSTC meeting certain performance standards as set out in **Exhibit B** to this Agreement.

SECTION 5.

As consideration for the payments listed above, Temple and TSTC agree to collectively cooperate in the construction and operation of EWCHEC at the location shown on **Exhibit A**, attached herein. The initial building at EWCHEC, consists of the construction of at least 112,000 square feet of facilities dedicated to educational activities.

SECTION 6.

In accordance with **Exhibits B** ~~**and B-1**~~, and in addition to providing an annual report and plan to the City, the Parties agree, for the duration of this Agreement, to have one (1) annual meeting and review of current progress to ensure the performance requirements under this Agreement are met. The annual review may include, but is not limited to, reviewing economic trends and developments in the community, assessing occupational and educational needs of area residents, reviewing labor market data and industry relations, inspecting numbers and data reflecting the number of TSTC graduates leaving and staying in Williamson County, and determining the feasibility of reaching the economic goals and performance requirements as set out in this Agreement. The annual review will allow the Parties to amend and adjust this Agreement by methods outlined in **Section 10** of this Agreement based on the annual review and economic assessment.

SECTION 7.

Each party shall be liable for its acts of negligence or wrongdoing pursuant to applicable law. Each party shall carry professional liability, general liability insurance, automobile, workers compensation, or such other insurance as is customary and reasonable for normal operations of a governmental unit of the State of Texas and shall list the Parties as an additional named insured on a Certificate of Insurance. Any contractor or other builder of the project shall be required to obtain public works payment and performance bonds, workers compensation, and other customary builders risk coverage naming the Parties and each governmental unit as the beneficiaries and additional named insured.

SECTION 8.

The City and HISD agree that the commitments made under this Agreement are made under the conditions of Texas Education Code Chapter 130.092(i).

SECTION 9.

Any notice or demand required or permitted to be made hereunder shall be made by certified or registered mail to the addresses set out herein in the respective signature blocks, and shall be deemed to have been received on the third business day after deposit in the U.S. mail. Either party may from time to time designate any other address for this purpose by written notice to the other party.

SECTION 10.

Amendments to or modification of this Agreement, if any, shall be in writing and signed by authorized representatives of the parties.

SECTION 11.

Lack of enforcement of any right under this Agreement by either party shall not constitute a waiver of that right or any other in the future.

SECTION 12.

The terms and conditions of this Agreement supersede all other agreements, written or oral, between the parties regarding the subject matter of this Agreement.

SECTION 13.

This Agreement shall be construed in accordance with and governed by the laws of the State of Texas, and exclusive jurisdiction and venue shall lie in Williamson County, Texas.

SECTION 14.

If any provision of this Agreement shall be held invalid or unenforceable by any court of competent jurisdiction, such holding shall not invalidate or render unenforceable any other provision hereof, but rather this entire Agreement will be construed as if not containing the particular invalid or unenforceable provision or provisions, and the rights and obligation of the Parties shall be construed and enforced in accordance therewith. The Parties acknowledge that if any provision of this Agreement is determined to be invalid or unenforceable, it is their desire and intention that such provision be reformed and construed in such a manner that it will, to the maximum extent practicable, to give effect to the intent of this Agreement and be deemed to be validated and enforceable.

SECTION 15.

The Exhibits identified in this Agreement are incorporated herein by reference and made a part hereof as though included in the body of this Agreement.

CITY OF HUTTO

By:_____

Name:_____

Date:_____

HUTTO INDEPENDENT SCHOOL DISTRICT

By: _____

Name:_____

Date: _____

TEXAS STATE TECHNICAL COLLEGE

By:_____

Name: _____

Date: _____

EXHIBIT A

Exhibit B

Performance Standards – HISD

Background: Pursuant to Chapter **135** of the Texas Education Code, TSTC works diligently to serve the needs of Texas industry in acquiring the technically skilled workers to grow and contribute to the economic development of the state. In the last several years, TSTC's efforts in working with the community and legislature have resulted in the building of several campuses, including locations in Red Oak, Fort Bend County, and Abilene. Funding mechanisms for TSTC buildings are twofold: Tuition revenue bonds approved by the Texas Legislature and private contributions by industry and communities. Future payments under this will be predicated on the good faith effort of TSTC to coordinate closely with the City of Hutto and the Hutto EDC to continue the growth of TSTC in Williamson County, commensurate with the industry demand and growth of the City of Hutto. In addition, an annual review of goals, and operational constraints, will be closely assessed to ensure alignment of strategic initiatives between the parties. Programmatic decisions for TSTC, and specifically those relating to this inter-local agreement, will be made using existing labor market intelligence capacities, occupational demand forecasts, and the Perryman Report Co-Commissioned by the City, TSTC, and HISD in the **2018.** Proof of attainment in the form of written memorandum, signed by TSTC officials, may be provided annually to the City of Hutto. Memorandum of Understanding shall be conditioned upon TSTC meeting the following agreed upon performance standards:

- **First Standard:** TSTC will partner with HISD to provide post-secondary training options to fully meet workforce demand in Hutto and the surrounding eastern Williamson County area. TSTC will provide channels of recruitment, post-secondary counseling, and financial resources including scholarship funds to students graduating from Hutto High School wishing to attend TSTC in Hutto. Dual enrollment pathways will be explored with all partner institutions at EWCHEC and reconciled with existing capacities and industry needs in an effort to increase the numbers of dual-enrollment students annually. Today, several dual enrollment pathways exist between TSTC and HISD, and HISD's strategic vision for their graduates will serve as a key component of this plan.

    o **Performance Requirement:** Annually allocate a minimum of **$25,000** in scholarship funds, only available to Hutto High School graduates, to enroll in a dual enrollment pathway and matriculate into full or part-time enrollment at TSTC in Hutto.

    o **Performance Requirement:** Hold an annual parent, teacher, counselor, and student TSTC Day, hosted by TSTC staff at Hutto High School, to recruit students and apprise parents of the dual enrollment pathways and value proposition of TSTC in Hutto.

    o **Performance Requirement:** Calculate an annual reconciliation of dual enrollment pathways to ensure they are germane to industry demand in Hutto and serve the economic development needs of Hutto and Williamson County, followed by close coordination with HISD to affirm training capacities and district priorities in dual enrollment.

Second Standard: TSTC's mission demands that we closely monitor industry and market trends to determine optimal program mix that results in high salaries and extensive opportunities for graduates. The program mix is also closely correlated with regional demand via a number of data collection methods. This information is then reconciled with existing capacities to create strategic recruitment, dual enrollment, facilities, and growth plans at every TSTC location. During this process, TSTC will work to acquire the necessary funding to begin planning for the design and construction of the next facility at the EWCHEC campus.

- **Performance Requirement:** Grow training capacity and aggregate student count in dual enrollment, traditional enrollment, and workforce training by continually optimizing capacities in the current facility. Annually assess and optimize instructional capacities to ensure sufficient use of instructional resources. The annual total headcount enrollment growth goal is to be set at 3%, with the understanding that economic, operational, and physical constraints often exist that may result in a higher or lower attainment.
- **Performance Requirement:** Using labor market intelligence capacities, determine and provide the City an annual report with information relating to the occupational demands in sectors relating to the strategic and economic development priorities of the City, including advanced manufacturing, allied health, commercial and building construction, and information technology.

- **Third Standard:** TSTC is a state agency and technical college system serving the needs of the entire state of Texas. However, we also are keenly aware of the economic development priorities of the local and regional bodies we serve, and can develop a plan to increase the percentage of graduates working in our local communities as the market allows.
  - **Performance Requirement:** Develop an annual plan, based on industry relations, labor market data, and existing capacities to increase the number of TSTC-Hutto graduates who stay in Hutto and/or Williamson County post-graduation. This plan will be provided to the City of Hutto as part of a comprehensive effort aimed at demonstrating our commitment to local economic development. The number of TSTC graduates leaving Williamson County and staying will be documented for monitoring purposes.

- **Fourth Standard and Requirement:** The vision for the EWCHEC campus is to be a multi-building campus on the 57-acre location off SH130 in Hutto, serving as many students as capacity will allow and demand requires through its partners, TSTC, Temple College, and Texas A&M Central Texas. The existing facility, in technical training areas, is at approximately 90% training capacity. As enrollment surpasses 70% of identified capacity in future buildings, the EWCHEC partners will notify the City of strategic discussions regarding future building development per the EWCHEC Master Plan (Exhibit A) in which the partners in this agreement would collaborate on funding mechanisms for future growth and expansion. In the current (2019) Legislative Session, there is a pending 16.5 million dollar request to build the next training facility at the EWCHEC site.

Once negotiations for future building developments have been triggered, the parties in this agreement, City of Hutto, Hutto EDC B, HISD, and TSTC shall take a proposed development plan to build to their respective boards within nine months.

~~EXHIBIT B-1~~

~~Performance Standards – City~~

~~**Background:** Pursuant to Chapter **135** of the Texas Education Code, TSTC works diligently to serve the needs of Texas industry in acquiring the technically skilled workers to grow and contribute to the economic development of the state. In the last several years, TSTC's efforts in working with the community and legislature have resulted in the building of several campuses, including locations in Red Oak, Fort Bend County, and Abilene. Funding mechanisms for TSTC buildings are twofold: Tuition revenue bonds approved by the Texas Legislature and private contributions by industry and communities. Future payments under this will be predicated on the good faith effort of TSTC to coordinate closely with the City of Hutto and the Hutto EDC to continue the growth of TSTC in Williamson County, commensurate with the industry demand and growth of the City of Hutto. In addition, an annual review of goals, and operational constraints, will be closely assessed to ensure alignment of strategic initiatives between the parties. Programmatic decisions for TSTC, and specifically those relating to this inter-local agreement, will be made using existing labor market intelligence capacities, occupational demand forecasts, and the Perryman Report Co-Commissioned by the City, TSTC, and HISD in the **2018.** Proof of attainment in the form of written memorandum, signed by TSTC officials, may be provided annually to the City of Hutto. Memorandum of Understanding shall be conditioned upon TSTC meeting the following agreed upon performance standards:~~

- ~~**First Standard:** TSTC will partner with HISD to provide post-secondary training options to fully meet workforce demand in Hutto and the surrounding eastern Williamson County area. TSTC will provide channels of recruitment, post-secondary counseling, and financial resources including scholarship funds to students graduating from Hutto High School wishing to attend TSTC in Hutto. Dual enrollment pathways will be explored with all partner institutions at EWCHEC and reconciled with existing capacities and industry needs in an effort to increase the numbers of dual-enrollment students annually. Today, several dual enrollment pathways exist between TSTC and HISD, and HISD's strategic vision for their graduates will serve as a key component of this plan.~~

  ~~**o Performance Requirement:** Annually allocate a minimum of **$25,000** in scholarship funds, only available to Hutto High School graduates, to enroll in a dual enrollment pathway and matriculate into full or part-time enrollment at TSTC in Hutto.~~

  ~~**o Performance Requirement:** Hold an annual parent, teacher, counselor, and student TSTC Day, hosted by TSTC staff at Hutto High School, to recruit students and apprise parents of the dual enrollment pathways and value proposition of TSTC in Hutto.~~

  ~~**o Performance Requirement:** Every five (5) years, calculate a reconciliation of dual enrollment pathways to ensure they are germane to industry demand in Hutto and serve the economic development needs of Hutto and Williamson County, followed by close coordination with HISD to affirm training capacities and district priorities in dual enrollment.~~

- ~~**Second Standard:** TSTC's mission demands that we closely monitor industry and market trends to determine optimal program mix that results in high salaries and extensive opportunities for graduates. The program mix is also closely correlated with regional demand via a number of data collection methods. This information is then reconciled with existing capacities to create strategic recruitment, dual enrollment, facilities, and growth plans at every TSTC location. During this process, TSTC will work to acquire the necessary funding to begin planning for the design and construction of the next facility at the EWCHEC campus. TSTC will work with the City of Hutto to have at least two (2) joint meetings per year to establish improved communication and collaboration efforts.~~

    - ~~**Performance Requirement:** Grow training capacity and aggregate student count in dual enrollment, traditional enrollment, and workforce training by continually optimizing capacities in the current facility. The annual total headcount enrollment growth goal is to be set at 3%, with the understanding that economic, operational, and physical constraints often exist that may result in a higher or lower attainment.~~

- ~~**Third Standard:** TSTC is a state agency and technical college system serving the needs of the entire state of Texas. However, we also are keenly aware of the economic development priorities of the local and regional bodies we serve, and we will work to increase the percentage of graduates working in our local communities as the market allows.~~
    - ~~**Performance Requirement:** Develop an annual report indicating industry relations, labor market data, and existing capacities to increase the number of TSTC-Hutto graduates who stay in Hutto and/or Williamson County post-graduation. This plan will be provided to the City of Hutto as part of a comprehensive effort aimed at demonstrating our commitment to local economic development.~~

- ~~**Fourth Standard and Requirement:** The vision for the EWCHEC campus is to be a multi-building campus on the 57-acre location off SH130 in Hutto, serving as many students as capacity will allow and demand requires through its partners, TSTC, Temple College, and Texas A&M Central Texas. The existing facility, in technical training areas, is at approximately 90% training capacity. As enrollment surpasses 70% of identified capacity in future buildings, the EWCHEC partners will notify the City of strategic discussions regarding future building development per the EWCHEC Master Plan (Exhibit A) in which the partners in this agreement would collaborate on funding mechanisms for future growth and expansion. In the current (2019) Legislative Session, there is a pending 16.5 million dollar request to build the next training facility at the EWCHEC site.~~

~~Once negotiations for future building developments have been triggered, the parties in this agreement, City of Hutto, Hutto EDC B, HISD, and TSTC shall take a proposed development plan to build to their respective boards within nine months.~~

EXHIBIT C – PAYMENT SCHEDULE

AGENDA ITEM REPORT
9.1.

To:	City Council
Subject:	Consideration of a public hearing and possible action on Ordinance 2022-029 approving a Specific Use Permit request for the property known as 201 FM 1660 N., to allow a medical office (chiropractor) and associated parking. (First Reading) (Ashley Lumpkin)
Meeting:	Thursday, June 2, 2022
Department:	Development Services /
Staff Contact:	Ashley Lumpkin

BACKGROUND INFORMATION:

The proposal consists of Lots 5 and 6, Block 5, in the GN Railroad Addition to the City of Hutto. The property is zoned Old Town 4 Transition (OT-4T). It is currently the home of Bless This Nest, a retail boutique. A Specific Use Permit is required for medical offices.

WEST: OT-5H, Vacant
NORTH: OT-4T, Residential Property
EAST: FM 1660, OT-4T, Residential Property
SOUTH: OT-5H, Vacant

SUMMARY OF REQUEST:

The property at 201 FM 1660 North is currently a large historical structure that contains a retail business. The applicant proposes to remodel the interior of the home to allow for a chiropractor's office and a live work unit. Any exterior changes, additions or modifications will be required to move forward to the Historic Preservation Commission for review and approval. Site Development and Building permits will also be required. Medical office use in the OT-4T zoning district requires approval of a Specific Use Permit.

Staff sent notices to 71 adjacent property owners within 600’ and to date has received three responses in favor.

STAFF REVIEW:

Planning and Zoning Commission recommends approval of the Proposed SUP for medical office.

FINANCIAL IMPACT:

None for this project.

AGENDA ITEM REPORT
9.1.

POLICY IMPLICATIONS:

None for this project.

ATTACHMENTS:

ORDINANCE NO. 2022-

AN ORDINANCE GRANTING A SPECIFIC USE PERMIT TO ALLOW A DRIVE THROUGH IN THE OT-4T (OLD TOWN TRANSITION) ZONING DISTRICT AT 201 FM 1660 NORTH, 0.27 ACRES, MORE OR LESS, OF LAND, I& G.N. RAILROAD ADDITION OF THE CITY OF HUTTO, LOTS 5 AND 6, BLOCK 5, BEING MORE PARTICULARLY DESCRIBED IN EXHIBIT "A", ATTACHED HERETO AND INCORPORATED HEREIN; PROVIDING FOR A PUBLICATION CLAUSE, SEVERABILITY CLAUSE, REPEALING CLAUSE, OPEN MEETING CLAUSE, PENALTY CLAUSE AND EFFECTIVE DATE.

WHEREAS, a request has been made to the City Council of the City of Hutto, Texas to grant a Specific Use Permit to allow a drive through use in the OT-4T (Old Town Transition) zoning district at the property known as 201 FM 1660 North, I & G.N. Railroad Addition of the City of Hutto Addition, Lots 5 and 6, Block 5 , described in Exhibit "A", being attached hereto and incorporated herein, and;

WHEREAS, on the 3rd day of May, 2022, after proper notification, the Planning and Zoning Commission held a public hearing on the proposed Specific Use Permit request, and;

WHEREAS, the Planning and Zoning Commission recommended approval of the proposed Specific Use Permit request on the 3rd day of May, 2022, and;

WHEREAS, on the 2nd day of June 2022, after proper notification, the City Council held a public hearing on the proposed Specific Use Permit request, and;

WHEREAS, the City Council determines that the regulations provided for herein promotes the health, safety, morals and protects and preserves the general welfare of the community, and;

WHEREAS, each and every requirement set forth in Chapter 211, Sub-Chapter A., Texas Local Government Code, and Article 14.02.002, Code of Ordinances (2020 Edition, as amended), City of Hutto, Texas concerning public notices, hearings, and other procedural matters has been fully complied with, Now therefore

BE IT ORDAINED BY THE CITY COUNCIL OF THE CITY OF HUTTO, TEXAS:

SECTION I.

1.

In accordance with the Unified Development Code Sections 10.203.18 and 10.204.2, the City Council has considered and made findings on the following matters regarding the proposed Specific Use Permit request:

10.203.18.3 Criteria

- The proposed use conforms to the Unified Development Code and is consistent with the comprehensive, neighborhood and other applicable land use and development plans.
- The proposed use is compatible with existing and permitted uses in the surrounding area and would not adversely affect property near the site.
- The site is a legal building lot.

10.203.18.5 Conditions

- The Planning and Zoning Commission and/or City Council may impose conditions on a specific use permit.

- Specific use permit approval does not run with the land, and expires with the end of the approved use.

10.203.18.6 Amendments

- Technical or engineering considerations during construction may call for minor deviations from approved specific use permits. Development Services staff may approve minor deviations if they conform to City regulations, and are consistent with the intent of the original specific use permit approval.
- Changes to approved specific use permits that Development Services staff finds are not minor deviations, including Planning and Zoning Commission imposed conditions, require approval through specific use permit review process, requiring a new application.

10.204.2 Effective date and expiration

- Specific use permits expire one (1) year from the date of approval by City Council.

2.

This Specific Use Permit request is subject to the conditions as identified by the City Council and incorporated herein. No permits shall be issued unless all of the following requirements are satisfied:

- Any future development, other than the use specified for this request, on the lot is required to obtain City Council approval prior to permitting.

SECTION II. Publication Clause

The City Secretary of the City of Hutto is hereby authorized and directed to publish the caption of this ordinance in the manner and for the length of time prescribed by law.

SECTION III. Severability Clause

The provisions of this ordinance are severable, and if any sentence, section, or other parts of this ordinance should be found to be invalid, such invalidity shall not affect the remaining provisions, and the remaining provisions shall continue in full force and effect.

SECTION IV. Repealing Clause

All ordinances and resolutions and parts thereof in conflict herewith are hereby expressly repealed insofar as they conflict.

SECTION V. Open Meeting Clause

The City Council hereby finds and declares that written notice of the date, hour, place, and subject of the meeting at which this ordinance was adopted was posted and that such meeting was open to the public as required by law at all times during which this ordinance and the subject hereof were discussed, considered, and formerly acted upon, all as required by the Open Meetings Act, Chapter 551, Texas Government Code, as amended.

SECTION VI. Effective Date

This ordinance shall take effect and be in force from and after its passage.

READ and **APPROVED** on first reading on this the **2nd** day of **June 2022** at a meeting of the Hutto, Texas City Council; there being a quorum present.

By motion duly made, seconded and passed with an affirmative vote of all the Councilmembers present, the requirement for reading this ordinance on two separate days was dispensed with.

READ, PASSED and **ADOPTED** on first reading of ordinance this **2nd** day of **June 2022** at a meeting of the Hutto, Texas City Council; there being a quorum present.

THE CITY OF HUTTO, TEXAS

_____
Mike Snyder, Mayor

Attest:

_____
Angela Walton, City Secretary

15-ITC-PF
GF#1815871

NOTICE OF CONFIDENTIALITY RIGHTS: IF YOU ARE A NATURAL PERSON, YOU MAY REMOVE OR STRIKE ANY OR ALL OF THE FOLLOWING INFORMATION FROM ANY INSTRUMENT THAT TRANSFERS AN INTEREST IN REAL PROPERTY BEFORE IT IS FILED FOR RECORD IN THE PUBLIC RECORDS: YOUR SOCIAL SECURITY NUMBER OR YOUR DRIVER'S LICENSE NUMBER.

WARRANTY DEED WITH VENDOR'S LIEN

Date: **May 31, 2018**

Grantor: **The Giocosa Foundation, a Texas non-profit corporation**

Grantor's Mailing Address (including county):

201 N FM 1660
Hutto, TX 78634
Williamson County

Grantee: **Bless This Nest, LLC, a Texas Limited Liability Company**

Grantee's Mailing Address (including county):

201 N FM 1660
Hutto, TX 78634
Williamson County

Consideration:

For the sum of Ten and No/100 Dollars ($10.00) and other valuable consideration paid to the undersigned by the Grantee herein named, the receipt and sufficiency of which is hereby acknowledged, and the further consideration of the execution and delivery by Grantee of Grantee's Note of even date herewith that is in the principal amount of **Two Hundred Fifty Thousand and No/100 Dollars ($250,000.00)**, payable to the order of **Round Top State Bank**. The Note is secured by a Vendor's Lien retained in

Unofficial Document

favor of **Round Top State Bank** in this Deed and by a Deed of Trust of even date herewith from Grantee to **Johnnie Mikeska**, Trustee.

Property (including any improvements):

Lots 5 and 6, Block 5, I& G.N. RAILROAD ADDITION TO THE CITY OF HUTTO, according to the map or plat thereof, recorded in Volume 50, Page 251, Deed Records, Williamson County, Texas.

Reservations from and Exceptions to Conveyance and Warranty:

Easements, rights-of-way, and prescriptive rights of record; all presently recorded restrictions, reservations, covenants, conditions, oil and gas leases, mineral severances, and other instruments, other than liens and conveyances, that affect the property; rights of adjoining owners in any walls and fences situated on a common boundary; any discrepancies, conflicts, or shortages in area or boundary lines, any encroachments or overlapping of improvements; all rights, obligations, and other matters emanating from and existing by reason of the creation, establishment, maintenance, and operation of any applicable governmental district, agency, authority, etc. taxes for current year, the payment of which Grantee assumes.

Grantor for the consideration and subject to the reservations from and exceptions to conveyance and warranty, grants, sells, and conveys to Grantee the property, together with all and singular the rights and appurtenances thereto in any wise belonging, to have and hold it to Grantee, Grantee's heirs, executors, administrators, successors, or assigns forever. Grantor hereby binds Grantor and Grantor's heirs, executors administrators, and successors to warrant and forever defend all and singular the property to Grantee and Grantee's heirs, executors, administrators, successors, and assigns, against every person whomsoever lawfully claiming or to claim the same or any part thereof, except as to the reservations from and exceptions to warranty.

The vendor's lien against and superior title to the property are retained until each note described is fully paid according to its terms, at which time this deed shall become absolute.

When the context requires, singular nouns and pronouns include the plural.

Round Top State Bank, at Grantee's request, has paid in cash to Grantor that portion of the purchase price of the property that is evidenced by the Note herein described. The Vendor's Lien and Superior Title to the property are retained for the benefit of **Round Top State Bank** and are transferred to that party without recourse on Grantor.

Unofficial Document

EXECUTED this 31st day of May, 2018.

The Giocosa Foundation, a Texas non-profit corporation

By: _____
Glenn Scruggs, CEO

STATE OF Texas
COUNTY OF Williamson

This instrument was acknowledged before me on the 31st day of May, 2018, by Glenn Scruggs, CEO of **The Giocosa Foundation, a Texas non-profit corporation,** on behalf of said non-profit corporation.

PAULINE TIVIS FREDRICKSON
My Notary ID # 8797545
Expires September 20, 2021

Notary Public, State of Texas
Notary's Name (printed):
Notary's commission expires:

AFTER RECORDING RETURN TO:

INDEPENDENCE TITLE COMPANY
101 E. Old Settler's Blvd., Suite 110
Round Rock, TX 78664

3
E

FILED AND RECORDED
OFFICIAL PUBLIC RECORDS 2018047718

DEED Fee: $29.00
06/01/2018 03:15 PM MBARRICK

Nancy E. Rister, County Clerk
Williamson County, Texas

Unofficial Document

CITY OF HUTTO

SPECIFIC USE PERMIT APPLICATION

Must be accompanied by a Master Application
May 2019

City of Hutto Development Services
500 W. Live oak Street Hutto TX 78634
512-759-3479 Planning
512-846-2640 Permits & Inspections
512-759-4038 Engineering
planning@huttotx.gov
building@huttotx.gov
www.huttotx.gov

PROJECT NAME: Dr. Jinger R. Poth - Chiropractic Office and Residential Home

PROPERTY ADDRESS: 201 N FM 1660, Hutto, TX 78634

Current zoning district: OT-4T Current Use: Retail- Bless This Nest

Proposed Use: Medical Office Code reference for specific use permit requirement: OT-4T

Current zoning: North of property: OT-4T South of property: OT-5H

East of property: OT-4T West of property: OT-5H

FEES ☐ All required fees may be provided by cash, credit card or check made payable to: City of Hutto

$525

REQUIRED FOR SUBMITTAL

All items listed must be included with application, unless otherwise noted.

- ☐ Complete Master application and Specific Use Permit application.
- ☐ Applicant has coordinated with staff on submittal requirements.
- ☐ Proof of ownership (copy of deed).
- ☐ Sketch of property by a registered professional land surveyor on (1) 8 ½" x 11".
- ☐ Letter of intent explaining reason(s) for request.
- ☐ List of all property owners (from WCAD) within 200-ft of subject property. – void per Autumn Speer.

REVIEW CRITERIA

- ☐ Uses requiring a specific use permit are listed in the permitted use tables of the UDC.
- ☐ Proposed use conforms to code requirements and is consistent with the comprehensive plan, community, neighborhood and other applicable land use and development plans.
- ☐ Proposed use is compatible with existing and permitted uses in the surrounding area and would not adversely affect property near the site.
- ☐ Site is a legal building lot.

PROCESSING

- ☐ Application intake, staff review and determination that it is complete, meeting scheduling, public notification (mailed/published/website notification).
- ☐ Notification required 16 days prior to scheduled meeting date (published).
- ☐ Notification required 16 days prior to scheduled meeting date (mailed).
- ☐ All final documents related to commission action are required 10 days prior to scheduled meeting date.
- ☐ All final documents related to city council action are required 10 days prior to scheduled meeting date.

FOR DEPARTMENT USE ONLY:

Submittal date	Date accepted for review	Check No.	Fees paid	PZ Mtg. date	CC Mtg. date

MASTER APPLICATION

Must accompany all application types
Unless otherwise indicated
May 2019

City of Hutto Development Services
500 W. Live Oak Street Hutto TX 78634
512-759-3479 Planning
512-846-2640 Permits & Inspections
512-759-4038 Engineering
512-759-5962 Fax
planning@huttotx.gov
building@huttotx.gov
www.huttotx.gov

PROJECT NAME: Dr. Jinger R. Poth Chiropractic Office and Residential Home APPLICATION TYPE Specific Use Permit

APPLICANT INFORMATION (*property owner or authorized agent*) This will be the City's official contact

Name: Glen Melton

Company Name: Melton Construction

Address: 602 N FM 1660 Hutto, TX 78634

Phone: 512-762-6955 Email: g.meltonconstruction@gmail.com

PROPERTY INFORMATION

Address: 201 N FM 1660, Hutto, TX 78634

Legal Description: Lot(s) 5-6 Block 5 Subdivision Railroad

Deed Reference: Volume _____ Page(s) _____ or Document No. _____

City Limits or ETJ: Hutto Historic Current Zoning District: OT-4T

PROPERTY OWNER INFORMATION

Name: Marci Wagner

Company Name: Bless This Nest

Address: Business: 201 N FM 1660, Hutto, TX 78634 / Personal: 609 N FM 1660, Hutto, TX 78634

Phone: 512-496-4980 Email: marciwagnerhomes@gmail.com

PROPERTY OWNER CONSENT/AGENT AUTHORIZATION

By my signature I hereby affirm that I am the property owner of record, or if the applicant is an organization or business entity, that authorization has been granted to represent the owner, organization or business in this application. I certify that the preceding information is complete and accurate, and it is understood that I agree to the submittal of this application. Additionally, my signature below indicates my awareness of the fee(s) required at the time of application submittal and that this fee(s) is non-refundable even in the event of application withdrawal or if reviewed and denied.

By signing this form, the owner of the property authorizes the City of Hutto to begin proceedings in accordance with the process for the type of application indicated on page one of this application. The owner further acknowledges that submittal of an application does not in any way obligate the City to approve the application and that although City staff may make certain recommendations regarding this application, the City Council may not follow that recommendation and may make a final decision that does not conform to the staff's recommendation.

Marci H Wagner — Property Owner Signature

Marci H. Wagner — Property Owner Printed Name

3-28-2022 — Date

THE STATE OF TEXAS

COUNTY OF Williamson

Before me, the undersigned authority, on this day personally appeared Marci H. Wagner known to me to be the person whose name is subscribed to the foregoing instrument and acknowledged to me that he executed the same for the purposes and considerations therein expressed.

Given under my hand and seal of office this 28 day of March, 2022 A.D.

Darrell Stevenson — Notary Public Signature

Darrell Stevenson — Notary Public Printed Name

(Seal) DARRELL STEVENSON
Notary Public, State of Texas
Comm. Expires 09-15-2023
Notary ID 124681424

If there are multiple property owners attach separate page(s) with notarized signature(s)

Glen Melton
Melton Construction
512-762-6955

602 N FM 1660
Hutto, TX 78634
g.meltonconstruction@gmail.com

City of Hutto Development Services
500 W. Live Oak Street
Hutto, TX 78634

March 28, 2020
Attn: Development Services
Re: 201 N FM 1660, Hutto, TX 78634

The property is zoned as OT-4T with a historical designation.
The current use is retail, Bless This Nest.

Dr. Poth wishes to remodel the property for her chiropractic office and personal residence.

This will include replacing/upgrading the shed to make it appropriate for the patient waiting area.

Lowering the original carriage house to allow easier access for patients who are in pain and have difficulty ambulating.

Her hours of operation are Monday through Thursday 10am to 6pm with one Friday and one Saturday of extra opening hours per month for her patients.

She will need to add a garage for anonymity purposes and use the alleyway for easy accessibility during Old Time Days and high 1660 traffic times.

Fencing will need to be added for Dr. Poth's personal safety and security.

Parking will remain the same but will add pavement to the last parking space.

Thank you for your consideration. We are excited about this project!

Glen Melton
Melton Construction

Plat of survey of property at 201 N. FM 1660
described as Lot 5 and 6, Block 5, of J&G.N. Railroad addition in the City of Hutto
a subdivision of record in Map or Plat Volume/Book/Cabinet/Document Number 50 at Page(s)/Slide(s) 261
of the Williamson County, Texas Plat records.
G.F. Number: 1405240-KPO Dated: Mar. 12, 2014 Reference: Milloy Rand Mortgage Company
Certify To: The Glocoma Foundation or Assign

SCALE: 1" = 30'

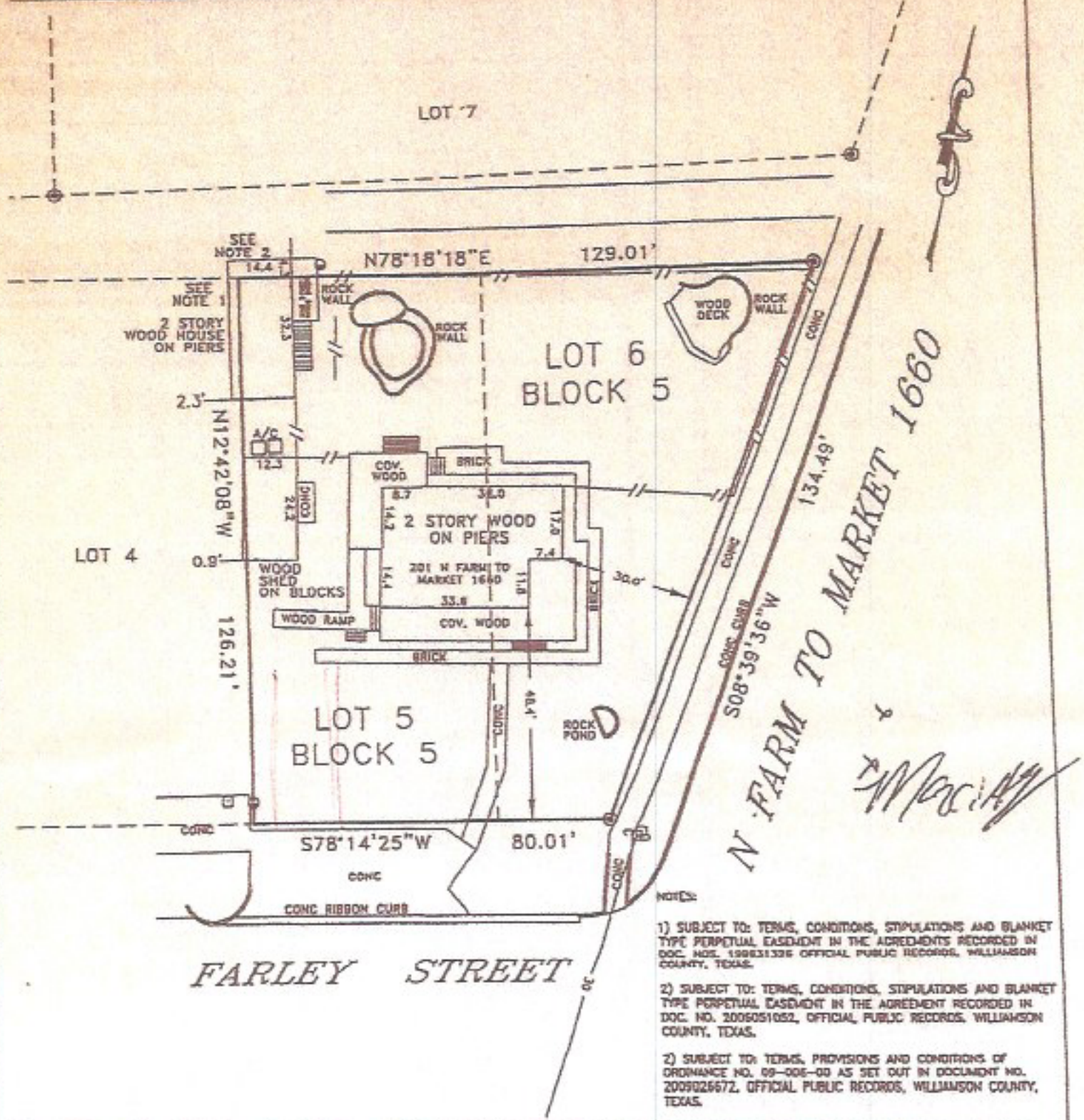

NOTES:

1) SUBJECT TO: TERMS, CONDITIONS, STIPULATIONS AND BLANKET TYPE PERPETUAL EASEMENT IN THE AGREEMENTS RECORDED IN DOC. NOS. 199831336 OFFICIAL PUBLIC RECORDS, WILLIAMSON COUNTY, TEXAS.

2) SUBJECT TO: TERMS, CONDITIONS, STIPULATIONS AND BLANKET TYPE PERPETUAL EASEMENT IN THE AGREEMENT RECORDED IN DOC. NO. 2005051052, OFFICIAL PUBLIC RECORDS, WILLIAMSON COUNTY, TEXAS.

2) SUBJECT TO: TERMS, PROVISIONS AND CONDITIONS OF ORDINANCE NO. 09-006-00 AS SET OUT IN DOCUMENT NO. 2009026672, OFFICIAL PUBLIC RECORDS, WILLIAMSON COUNTY, TEXAS.

The undersigned does hereby certify that the plat shown represents the results of a survey on the ground under my supervision and is true and correct and that there are no discrepancies, conflicts, shortages in area, boundary line conflict, encroachments, overlapping of improvements, visible utility easements, except as shown and the property has access to and from a dedicated roadway.

The property shown hereon is located in Zone "X" areas outside the 500 year floodplain

as shown on Community Panel Number 48491 0520 F of the Flood Insurance Rate Map prepared for City of Hutto by the Federal Emergency Management Agency. Map Dated: Sept. 26, 2008.
This information is based solely on said map and the surveyor does not assume responsibility as to any information provided and does not represent accuracy or inaccuracy of said map.

This survey is copyright 2014 by Crichton and Associates, Inc., and is being provided solely for the use of the current parties and no license has been created, express or implied, to copy the survey except as is necessary in conjunction with this transaction only.

LEGEND
1/2" IRON PIN FOUND
1/2" IRON PIN SET
NAIL FOUND
LIGHT POLE
UPOWER POLE
GUY WIRE
FIRE HYDRANT
WATER METER
WATER VALVE
PVC RISER
GAS METER
SEWER CLEANOUT
UTILITY PEDESTAL
SANITARY SEWER MANHOLE
GAS UTILITY WARNING SIGN
SIGNAL PAD WITH ELEC.
IRON FENCE
WOOD FENCE
CHAIN LINK FENCE
WIRE FENCE
OVERHEAD ELECTRIC LINE
( ) RECORD INFORMATION

CRICHTON
AND ASSOCIATES INC.
LAND SURVEYORS
TBLS Firm # 101727-00
8448 East Highway 290
Suite B105
Austin, Texas 78723
(512) 244-3395
Orders@CrichtonandAssociates.com

JOB NUMBER: 14_138

STATE OF TEXAS
REGISTERED
HERMAN CRICHTON
4046
PROFESSIONAL
LAND SURVEYOR

DATE: April 3, 2014

15-ITC-PF
GF#1815871

NOTICE OF CONFIDENTIALITY RIGHTS: IF YOU ARE A NATURAL PERSON, YOU MAY REMOVE OR STRIKE ANY OR ALL OF THE FOLLOWING INFORMATION FROM ANY INSTRUMENT THAT TRANSFERS AN INTEREST IN REAL PROPERTY BEFORE IT IS FILED FOR RECORD IN THE PUBLIC RECORDS: YOUR SOCIAL SECURITY NUMBER OR YOUR DRIVER'S LICENSE NUMBER.

WARRANTY DEED WITH VENDOR'S LIEN

Date: **May 31, 2018**

Grantor: **The Giocosa Foundation, a Texas non-profit corporation**

Grantor's Mailing Address (including county):

201 N FM 1660
Hutto, TX 78634
Williamson County

Grantee: **Bless This Nest, LLC, a Texas Limited Liability Company**

Grantee's Mailing Address (including county):

201 N FM 1660
Hutto, TX 78634
Williamson County

Consideration:

For the sum of Ten and No/100 Dollars ($10.00) and other valuable consideration paid to the undersigned by the Grantee herein named, the receipt and sufficiency of which is hereby acknowledged, and the further consideration of the execution and delivery by Grantee of Grantee's Note of even date herewith that is in the principal amount of **Two Hundred Fifty Thousand and No/100 Dollars ($250,000.00)**, payable to the order of **Round Top State Bank**. The Note is secured by a Vendor's Lien retained in

Unofficial Document

favor of **Round Top State Bank** in this Deed and by a Deed of Trust of even date herewith from Grantee to **Johnnie Mikeska**, Trustee.

Property (including any improvements):

Lots 5 and 6, Block 5, I& G.N. RAILROAD ADDITION TO THE CITY OF HUTTO, according to the map or plat thereof, recorded in Volume 50, Page 251, Deed Records, Williamson County, Texas.

Reservations from and Exceptions to Conveyance and Warranty:

Easements, rights-of-way, and prescriptive rights of record; all presently recorded restrictions, reservations, covenants, conditions, oil and gas leases, mineral severances, and other instruments, other than liens and conveyances, that affect the property; rights of adjoining owners in any walls and fences situated on a common boundary; any discrepancies, conflicts, or shortages in area or boundary lines, any encroachments or overlapping of improvements; all rights, obligations, and other matters emanating from and existing by reason of the creation, establishment, maintenance, and operation of any applicable governmental district, agency, authority, etc. taxes for current year, the payment of which Grantee assumes.

Grantor for the consideration and subject to the reservations from and exceptions to conveyance and warranty, grants, sells, and conveys to Grantee the property, together with all and singular the rights and appurtenances thereto in any wise belonging, to have and hold it to Grantee, Grantee's heirs, executors, administrators, successors, or assigns forever. Grantor hereby binds Grantor and Grantor's heirs, executors administrators, and successors to warrant and forever defend all and singular the property to Grantee and Grantee's heirs, executors, administrators, successors, and assigns, against every person whomsoever lawfully claiming or to claim the same or any part thereof, except as to the reservations from and exceptions to warranty.

The vendor's lien against and superior title to the property are retained until each note described is fully paid according to its terms, at which time this deed shall become absolute.

When the context requires, singular nouns and pronouns include the plural.

Round Top State Bank, at Grantee's request, has paid in cash to Grantor that portion of the purchase price of the property that is evidenced by the Note herein described. The Vendor's Lien and Superior Title to the property are retained for the benefit of **Round Top State Bank** and are transferred to that party without recourse on Grantor.

Unofficial Document

EXECUTED this 31st day of May, 2018.

The Giocosa Foundation, a Texas non-profit corporation

By: _____
Glenn Scruggs, CEO

STATE OF Texas
COUNTY OF Williamson

This instrument was acknowledged before me on the 31st day of May, 2018, by Glenn Scruggs, CEO of **The Giocosa Foundation, a Texas non-profit corporation,** on behalf of said non-profit corporation.

PAULINE TIVIS FREDRICKSON
My Notary ID # 8797545
Expires September 20, 2021

Notary Public, State of Texas
Notary's Name (printed):
Notary's commission expires:

AFTER RECORDING RETURN TO:

INDEPENDENCE TITLE COMPANY
101 E. Old Settler's Blvd., Suite 110
Round Rock, TX 78664

3
E

FILED AND RECORDED
OFFICIAL PUBLIC RECORDS 2018047718

DEED Fee: $29.00
06/01/2018 03:15 PM MBARRICK

Nancy E. Rister, County Clerk
Williamson County, Texas

Unofficial Document

201 N FM 1660 SUP - Medical Office

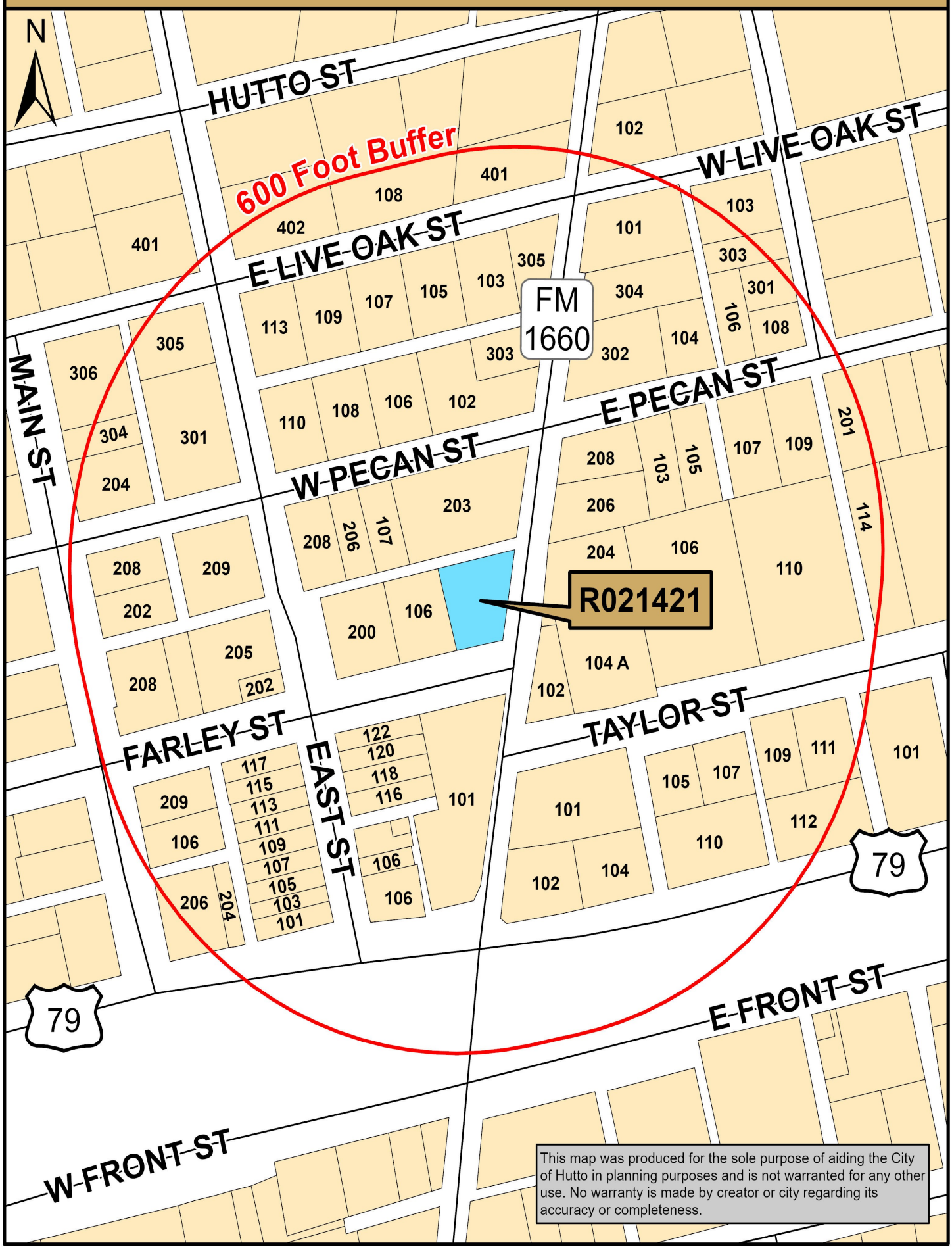

Map Document: (K:\Site_Location_Maps\2022_Site_Location_Maps\201_N_FM_1660_SUP_Medical_Office.mxd)

4/12/2022 -- 12:30:51 PM

CITY OF HUTTO

0 100 200 400
Feet

Autumn Speer

From: jmleehock@gmail.com
Sent: Monday, May 16, 2022 8:27 AM
To: Planning
Subject: Response - 201 FM 1660 N

Good morning –

We are the owners of 304 N FM 1660. This is our response to the rezoning request for 201 FM 1660N to be used as a medical office (chiropractor)

Maryanne Lee and James Hock are **IN FAVOR** of the rezoning.

Public Hearing Date(s) – May 3rd + June 2nd

This email has been scanned for spam and viruses by Proofpoint Essentials. Click here to report this email as spam.

PROPERTY OWNER NOTICE OF TWO PUBLIC HEARINGS
TO BE HELD AT THE

PLANNING & ZONING COMMISSION ON:	**MAY 3, 2022**
CITY COUNCIL ON:	**JUNE 2, 2022**
MEETING LOCATION:	**500 W. Live Oak Street – City Hall**
MEETING TIMES:	**7:00 PM**

Notice is hereby given to all interested persons that the **HUTTO PLANNING & ZONING COMMISSION** and the **HUTTO CITY COUNCIL** will hold two separate public hearings regarding the Specific Use Permit request for the property known as 201 FM 1660 N, to allow a medical office (chiropractor) and associated parking (UDC 10.304.6).

As one of the owners of property located within 600 feet of the subject properties, you are invited to attend this meeting to voice your support or opposition. Detailed information will be available on the City of Hutto website under Planning and Zoning Commission agenda/packet information at least 72-hours before the meeting date here: *http://www.huttotx.gov/residents/services/planning_and_zoning_commission_agendas_and_minutes.php*. You may also do one of the following before the meeting date:

1. Mail this form to: Development Services, 500 W. Live Oak Street, Hutto, TX 78634.
2. Email your response to: **planning@huttotx.gov** Include case name, public hearing date, your name and address, and if you are in favor or against the rezoning including comments.

For additional information you may contact the Development Services-Planning staff at (512) 759-3479 or planning@huttotx.gov.

==========

SURROUNDING PROPERTY OWNER'S RESPONSE

Project Name: Specific Use Permit request for the property known as 201 FM 1660 N, to allow a medical office (chiropractor) and associated parking (UDC 10.304.6).

Name: Rob Bocanegra

Address: 208 Farley St

☑ **I AM IN FAVOR**

☐ **I OBJECT**

Write comments below, attach additional pages if needed.

SITE LOCATION MAP

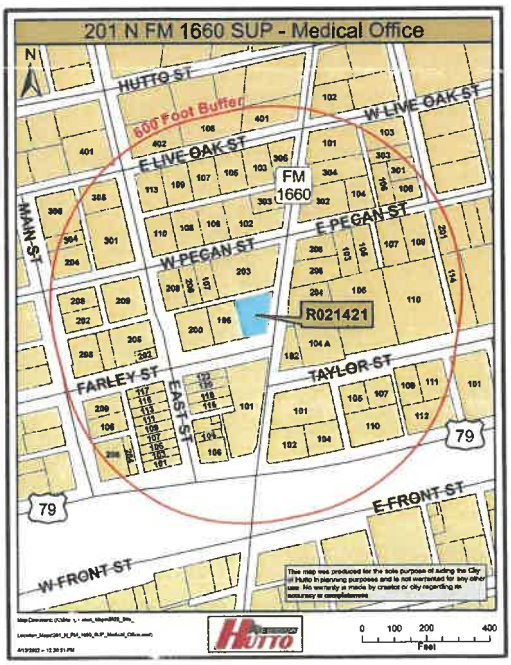

PROPERTY OWNER NOTICE OF TWO PUBLIC HEARINGS
TO BE HELD AT THE

PLANNING & ZONING COMMISSION ON:	**MAY 3, 2022**
CITY COUNCIL ON:	**JUNE 2, 2022**
MEETING LOCATION:	**500 W. Live Oak Street – City Hall**
MEETING TIMES:	**7:00 PM**

Notice is hereby given to all interested persons that the **HUTTO PLANNING & ZONING COMMISSION** and the **HUTTO CITY COUNCIL** will hold two separate public hearings regarding the Specific Use Permit request for the property known as 201 FM 1660 N, to allow a medical office (chiropractor) and associated parking (UDC 10.304.6).

As one of the owners of property located within 600 feet of the subject properties, you are invited to attend this meeting to voice your support or opposition. Detailed information will be available on the City of Hutto website under Planning and Zoning Commission agenda/packet information at least 72-hours before the meeting date here: *http://www.huttotx.gov/residents/services/planning_and_zoning_commission_agendas_and_minutes.php*. You may also do one of the following before the meeting date:

1. Mail this form to: Development Services, 500 W. Live Oak Street, Hutto, TX 78634.
2. Email your response to: **planning@huttotx.gov** Include case name, public hearing date, your name and address, and if you are in favor or against the rezoning including comments.

For additional information you may contact the Development Services-Planning staff at (512) 759-3479 or planning@huttotx.gov.

==========

SURROUNDING PROPERTY OWNER'S RESPONSE

Project Name: Specific Use Permit request for the property known as 201 FM 1660 N, to allow a medical office (chiropractor) and associated parking (UDC 10.304.6).

Name: DAVID FIGGE

Address: 204 US Hwy 79 W, 78634

☒ **I AM IN FAVOR**

☐ **I OBJECT**

Write comments below, attach additional pages if needed.

SITE LOCATION MAP

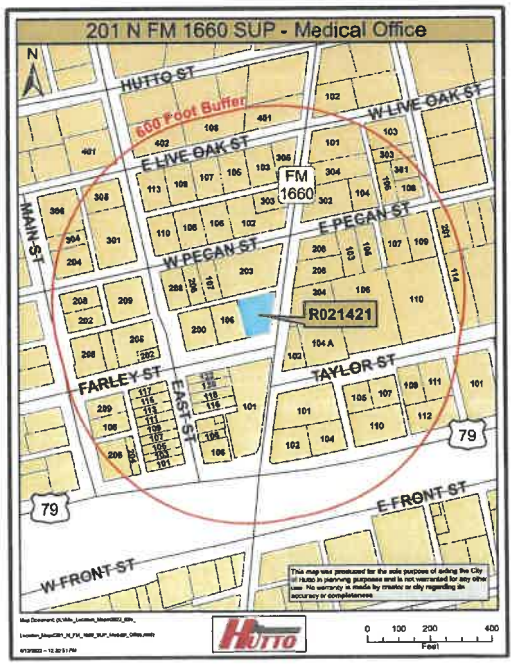

AGENDA ITEM REPORT
9.2.

To:	City Council
Subject:	Consideration and possible action on Ordinance No. O-2022-028 establishing an Outside Agency Funding Advisory Committee; and providing for related matters. (Second Reading) (City Council)
Meeting:	Thursday, June 2, 2022
Department:	City Council /
Staff Contact:	Angela Walton

BACKGROUND INFORMATION:

City Council discussed organizing a committee to oversee Outside Agency Funding with members of Council that were not on the Nominating Committee. The proposed ordinance establishes the OAF Advisory Committee, consisting of consist of three (3) city council members, each serving a one-year term. In even-numbered years, the council members for Place 1, Place 3, and Place 5 shall serve on the outside agency funding advisory committee. In odd-numbered years, the council members for Place 2, Place 4, and Place 6 shall serve on the outside agency funding advisory committee.

SUMMARY OF REQUEST:

STAFF REVIEW:

FINANCIAL IMPACT:

POLICY IMPLICATIONS:

ATTACHMENTS:

ORDINANCE NO. O-2022-028

AN ORDINANCE OF THE CITY OF HUTTO, TEXAS, AMENDING ARTICLE 2.02 OF THE CODE OF ORDINANCES BY ADDING A NEW DIVISION 9 TO ESTABLISH AN OUTSIDE AGENCY FUNDING ADVISORY COMMITTEE; PROVIDING FOR RELATED MATTERS; AND PROVIDING FOR: FINDINGS OF FACT, ENACTMENT, REPEALER, SEVERABILITY, EFFECTIVE DATE, AND PROPER NOTICE & MEETING.

WHEREAS, the City of Hutto, Texas (the "City"), is a home rule city operating under the laws of its Charter and the State and Texas, by and through its duly elected City Council members; and

WHEREAS, desires to establish an Outside Agency Funding Advisory Committee to review annual applications for City funding and make funding recommendations to the City Council; and

WHEREAS, the City Council finds certain amendments to the Code of Ordinances are necessary to meet changing conditions and are in the best interest of the City; and

WHEREAS, the City finds that this Ordinance was passed and approved at a meeting of the City Council of the City of Hutto held in strict compliance with the Texas Open Meetings Act at which a quorum of the City Council Members was present and voting; and

WHEREAS, the City Council has determined that all prerequisites to adopt this Ordinance have been met.

NOW, THEREFORE, BE IT ORDAINED BY THE CITY COUNCIL OF THE CITY OF HUTTO, TEXAS, THAT:

Section 1. Findings of Fact: The foregoing recitals are incorporated into this Ordinance by reference as findings of fact as if expressly set forth herein.

Section 2. Enactment: Chapter 2, Article 2.02, of the Code of Ordinances of the City of Hutto, is hereby amended by adding a new Division 9 to read in accordance with **Attachment A** which is attached hereto and incorporated into this Ordinance for all intents and purposes.

Section 3. Repealer: All ordinances, or parts thereof, that are in conflict or inconsistent with any provision of this Ordinance are hereby repealed to the extent of such conflict, and the provisions of this Ordinance shall be and remain controlling as to the matters regulated herein.

Section 4. Severability: Should any of the clauses, sentences, paragraphs, sections, or parts of this Ordinance be deemed invalid, unconstitutional, or unenforceable by a court of law or administrative agency with jurisdiction over the matter, such action shall not be construed to affect any other valid portion of this Ordinance.

Section 5. Codification: The City Secretary is hereby directed to record and publish the attached rules, regulations and policies in the City's Code of Ordinances as authorized by Section 52.001 of the Texas Local Government Code.

Section 6. Passage: Pursuant to Section 3.13 of the Hutto City Charter, the Council determined that the first reading of this Ordinance is sufficient for adequate consideration by an affirmative vote of four or more members of the City Council during the first reading and the requirement for reading this Ordinance on two separate dates with was dispensed with by the affirmative vote of four or more members of the City council; therefore, this Ordinance is adopted and enacted without further readings. In the event a second reading is necessary, this Ordinance is adopted and enacted upon the affirmative vote of four or more members of the City Council upon second reading.

Section 7. Effective Date: This Ordinance shall take effect immediately after its final passage and any publication in accordance with the requirements of the City of Hutto and the laws of the State of Texas.

Section 8. Proper Notice & Meeting: It is hereby officially found and determined that the meeting at which this Ordinance was passed was open to the public and that public notice of the time, place, and purpose of said meeting was given as required by the Open Meetings Act, Texas Government Code, Chapter 551. Notice was also provided as required by Chapter 52 of the Texas Local Government Code.

READ and **APPROVED** on the first reading this the **__th** day of **_____ 2022.**

By motion duly made, seconded, and passed with an affirmative vote of all the Councilmembers present, the requirement for reading this Ordinance on two separate dates was dispensed with.

THE CITY OF HUTTO, TEXAS

By:_____
Mike Snyder, Mayor

ATTEST:

By:_____
Angela Walton, City Secretary

(SEAL)

APPROVED AS TO FORM:

By: _____
Cristian Rosas-Grillet, Assistant City Attorney

Attachment "A"

Division 9. Outside Agency Funding Advisory Committee

Sec. 2.02.208 - Creation; composition

There is hereby created the outside agency funding advisory committee of the City. The outside agency funding advisory committee shall consist of three (3) city council members, each serving a one-year term. In even-numbered years, the council members for Place 1, Place 3, and Place 5 shall serve on the outside agency funding advisory committee. In odd-numbered years, the council members for Place 2, Place 4, and Place 6 shall serve on the outside agency funding advisory committee.

Sec. 2.02.209 – Powers and Duties

The outside agency funding advisory committee will advise and recommend the annual expenditure of funds for Outside Agency Funding.

The outside agency funding advisory committee may adopt procedural guidelines for evaluating funding applications.

Sec. 2.02.210 – Advisory Capacity

The outside agency funding advisory committee, in discharging its duties enumerated in this division, shall serve in an advisory capacity only. As such, the outside agency funding advisory committee is not subject to the Texas Open Meetings Act.

AGENDA ITEM REPORT
10.1.

To:	City Council
Subject:	Consideration and possible action on Resolution No. R-2022-038 approving an Advance Funding Agreement (AFA) between the City of Hutto and the Texas Department of Transportation (TxDOT) for the FM 1660 Intersections Improvement project, and authorizing the Interim City Manager to execute the AFA. (Wade Benton)
Meeting:	Thursday, June 2, 2022
Department:	Engineering /
Staff Contact:	Wade Benton

BACKGROUND INFORMATION:

The FM 1660 Intersections Improvement project would improve safety and mobility for local traffic conditions within the project area. The project includes improvements to the three intersections of FM 1660 at Limmer Loop, and US 79 at Jim Cage.

The City has moved forward with project development of the FM 1660 Intersections Improvement project, including environmental clearance, construction design, and right-of-way/utility coordination.

The Advance Funding Agreement (AFA) would memorialize the roles and responsibilities of the Texas Department of Transportation (TxDOT) and the City of Hutto and is required by TxDOT to allow the City of Hutto to advertise, let, and manage the construction of the project.

The City of Hutto would contribute a total of $9,342,600.00 which includes environmental clearance, construction engineering, right-of-way/utility coordination, construction funding, and State direct costs. City staff and design consultant (HNTB) have coordinated review of the AFA document. The agreement has received staff approval from TxDOT and is ready for approval by the City of Hutto.

SUMMARY OF REQUEST:

City Council approval of resolution authorizing the Interim City Manager to execute AFA with TxDOT for the FM 1660 Intersections project.

STAFF REVIEW:

FINANCIAL IMPACT:

AGENDA ITEM REPORT
10.1.

POLICY IMPLICATIONS:

ATTACHMENTS:

AGENDA ITEM REPORT
10.2.

To:	City Council
Subject:	Consideration and possible action on Resolution No. R-2022-055 authorizing the Interim City Manager to submit a grant application to the US Dept of Justice, Office of Community Orienting Policing Services (COPS Office), for the Cops Hiring Program (CHP) and authorizing the Chief of Police to act as the City's authorized grant official. (Chief Jeff Yarbrough)
Meeting:	Thursday, June 2, 2022
Department:	Police Department /
Staff Contact:	Jeff Yarbrough

BACKGROUND INFORMATION:

The federal government offers a variety of grants meant to help law enforcement agencies hire officers to prevent crime and improve community policing. The Hutto Police Department's number one objective is to reduce crime, and the fear of crime, and to improve the quality of life for our citizens.

SUMMARY OF REQUEST:

The Hutto Police Department is a progressive law enforcement agency that provides the highest level of service and professionalism to the remarkable and fast-growing City of Hutto. As our community grows, the Hutto Police Department will continue to improve and expand our efforts to provide the highest level of safety for our citizens and visitors. In response to the increased growth in our city, the department must expand and increase the capacity of the agency to engage in community policing activities. The Hutto Police Department seeks to improve upon its Community Policing efforts by applying for the COPS grant. Due to the rapid growth of the City of Hutto, the Hutto Police Department has not been able to continue its Community Policing model of policing. Additional personnel and funds are needed to improve our Community Policing program and maintain our relationship with our community. With the addition of these funds, we can continue to improve the quality of life for our citizens. The Office of Community Oriented Policing Services (COPS Office) through the U.S Department of Justice advances the practice of community policing by the nation's state and local law enforcement agencies through information sharing and grant resources. In order to ensure that Hutto remains a safe and desirable community and to meet the current and future needs for law enforcement services, the Hutto Police Department seeks to apply for the COPS Hiring Program (CHP) through the US DOJ. The Fiscal Year 2022 COPS Hiring Program (CHP) is a competitive grant program designed to provide funding directly to law enforcement agencies to hire and/or rehire additional career law enforcement officers in an effort to increase their community policing capacity and crime prevention efforts, all while building trust and legitimacy between law

enforcement and the communities they serve. There is $156 million in funding available through the FY 2022 CHP. The award period of performance is five years (60 months) to allow time for recruitment and hiring. Only 36 months of officer salary is chargeable to the award.

STAFF REVIEW:

FINANCIAL IMPACT:

The total cost to hire 4 officers (salaries and benefits) is $918,537.99 for 3 years. With the COPS grant, they will allocate $688,903.49, which is 75% of the total amount. Our city matching portion (25%) will be $229,634.50. Therefore, the salary cost savings for the city will be $688,903.49, which will employ 4 officers for 3 years.

POLICY IMPLICATIONS:

No policy implications.

ATTACHMENTS:

RESOLUTION R-2022-055

A RESOLUTION OF THE CITY COUNCIL OF THE CITY OF HUTTO, AUTHORIZING THE CITY MANAGER TO SUBMIT A GRANT APPLICATION TO THE U.S. DEPARTMENT OF JUSTICE, OFFICE OF COMMUNITY ORIENTED POLICING SERVICES (COPS OFFICE), FOR THE COPS HIRING PROGRAM (CHP), AND AUTHORIZING THE CHIEF OF POLICE TO ACT AS THE CITY'S AUTHORIZED GRANT OFFICIAL.

WHEREAS, the Hutto City Council finds it in the best interest of the citizens of Hutto that the Police Department receives funding for up to five additional Police Officer positions from 2022-2027: and

WHEREAS, the Hutto City Council agrees that in the event of loss or misuse of the funds from the COPS Office, the Hutto City Council assures that the funds will be returned to the COPS Office, in full;

WHEREAS, the Hutto City Council is committed to provide all applicable matching funds and meet the retention requirements as per the conditions of the COPS Hiring Program;

WHEREAS, the Hutto City Council designates, Jeffrey Yarbrough, Chief of Police, as the grantee's authorized official. The authorized official is given the power to apply for, accept, reject, alter or terminate the grant on behalf of the applicant agency.

NOW, THEREFORE, BE IT RESOLVED BY THE CITY COUNCIL OF THE CITY OF HUTTO, TEXAS, THAT: the Hutto City Council approves the submission of the Grant Application for funding from the COPS Hiring Program, U.S. Department of Justice, Office of Community Oriented Policing Services.

Passed and approved this 2nd day of June 2022.

_____
Mike Snyder, Mayor

ATTEST:

_____
Angela Walton, City Clerk

COPS
Community Oriented Policing Services
U.S. Department of Justice

Pre-Award Frequently Asked Questions (FAQ) for FY 2022 COPS Hiring Program (CHP)

Q. What is the purpose of the COPS Hiring Program (CHP)?

A. The goal of the COPS Hiring Program is to provide funding directly to law enforcement agencies to hire and/or rehire additional career law enforcement officers in an effort to increase their community policing capacity and crime prevention efforts. Anticipated outcomes of CHP awards include engagement in planned community partnerships, implementation of projects to analyze and assess problems, implementation of changes to personnel and agency management in support of community policing, and increased capacity of agencies to engage in community policing activities.

Q. Is CHP an open solicitation?

A. Yes. All state, local, territorial, and tribal law enforcement agencies that have primary law enforcement authority are eligible to apply. An agency with primary law enforcement authority is defined as the first responder to calls for service for all types of criminal incidents within the jurisdiction served.

This is a competitive, discretionary program.

What is the program application process?

A. Completing an application under CHP is a two-step process. Applications must be submitted electronically through Grants.gov and JustGrants.

See the COPS Office How to Apply page for more information.

Q. What is the deadline for this solicitation?

A. There are two key deadlines: The deadline to submit the initial application in Grants.gov is **7:59 p.m. on Thursday, June 9.** The deadline for complete application packages in JustGrants is **7:59 p.m. ET on Thursday, June 16.**

Allowable Costs under CHP

What may my agency request funding for under the CHP award program?

A. FY 2022 CHP awards will cover up to 75 percent of the entry-level salary and fringe benefits for each approved position for a three-year period, based on the applicant's current entry-level salary for full-time officers. There is a minimum 25 percent local cash match (cost share) requirement unless a waiver

is approved. The maximum federal share per officer position is $125,000 over the three-year period (not $125,000 per year) unless a local match waiver is approved. Any additional costs for higher than entry-level salaries and fringe benefits will be the responsibility of the recipient agency.

Funding under this program will support three years of officer or deputy salaries within a five-year period of performance to accommodate time needed for recruitment and hiring. Agencies must retain each CHP-funded position for 12 months following the three years of funding for that position. The additional officer positions should be added to your agency's law enforcement budget with state and/or local funds over and above the number of locally funded officer positions that would have existed in the absence of the award. Absorbing CHP-funded positions through attrition (rather than adding the extra positions to your budget with additional funding) does not meet the retention requirement.

Funding under this program may be used to do the following:

- Hire new officers, which includes filling existing officer vacancies that are no longer funded in your agency's budget. These positions must be in addition to your current budgeted (funded) level of sworn officer positions, and the officers must be hired on or after the official award start date on the notice of award.

- Rehire officers laid off by any jurisdiction as a result of state, local, or Bureau of Indian Affairs (BIA) budget reductions. The rehired officers must be rehired on or after the official award start date on the notice of award. Documentation must be maintained showing the date(s) that the positions were laid off and rehired.

- Rehire officers who are (at the time of application) currently scheduled to be laid off by your jurisdiction on a specific future date as a result of state, local, or Bureau of Indian Affairs budget reductions. Recipients will be required to continue funding the positions with local funding until the date(s) of the scheduled layoffs. The dates of the scheduled layoffs and the number of positions affected must be identified in the CHP application. The recipient may rehire the officers with CHP funding on or immediately after the date of the scheduled layoff. Unless required by a recipient jurisdiction, the agency is not required to formally complete the administrative steps associated with the layoff of the individual officers it is seeking to rehire so long as the agency can document that a final, approved budget decision was made to lay off those individual officers on the identified layoff date. Documentation must be maintained detailing the dates and reason(s) for the layoffs. Furthermore, agencies awarded will be required to maintain documentation that demonstrates that the scheduled layoffs are occurring for local economic reasons unrelated to the availability of CHP award funds; such documentation may include local council meeting minutes, memoranda, notices, or orders discussing the layoffs, budget documents ordering jurisdiction-wide budget reductions, and/or notices provided to the individual officers regarding the layoffs.

Note: An applicant may request funding in one or more of the above-referenced hiring categories under CHP. If an application is approved for funding, the notice of award will specify the number of positions approved in each category. Once awarded, recipient agencies may not move funded positions between the hiring categories without receiving written prior approval from the COPS Office.

An applicant may not reduce its existing current fiscal year budget for sworn officers just to make use of the CHP award. Any budget cut must be unrelated to the receipt of CHP award funds to avoid a violation of the COPS Office statutory non-supplanting requirement.

Q. May CHP funding be used to pay for officer overtime or eliminate officer furloughs?

A. No. CHP funding may only be used to hire and rehire full-time law enforcement officers in order to increase law enforcement agencies' community policing capacity.

Q. May CHP funding be used to fill sworn officer positions that are vacant at the time we apply for CHP funding?

A. No. Officers funded with CHP funds must be in addition to any officers funded in your agency's local budget. However, CHP funding may be used to fill vacant sworn officer positions if the positions are unfunded in the law enforcement budget (i.e., if state, local, or BIA funding has not been budgeted to pay for the salary and benefits costs of the positions) because of a hiring freeze or budget reductions due to local fiscal distress.

Q. How does the COPS Office define a "career law enforcement officer"? Does this include sworn jail or correctional officers?

A. The COPS Office statute defines a "career law enforcement officer" as an officer hired on a permanent basis who is authorized by law or by a state or local public agency to engage in or oversee the prevention, detection, or investigation of violations of criminal laws. CHP only funds sworn officer or deputy positions who are first responders to calls for service. Sworn jail or correctional officers are not funded through this program.

Hiring Military Veterans under CHP

Q. How do you define a military veteran?

A. Under the CHP solicitation, a military veteran is defined as a person who served in the active military, naval, or air service, and who was discharged or released therefrom under conditions other than dishonorable.

Q. Are new-hire officer positions required to be military veterans under CHP?

A. No. Under FY 2022 CHP, new-hire officer positions are not required to be military veterans. However, because the COPS Office supports the priority to hire military veterans whenever possible, applicants who commit to hiring or rehiring at least one military veteran under CHP will receive additional consideration for FY 2022 CHP funding. These military veterans may be in any of the three hiring categories described under "Funding Provisions," not just new hires.

Hiring/Layoff Guidance

Q. If my agency receives CHP funding to rehire officers who were laid off at the time of our application, do we need to maintain documentation in the CHP award file regarding the layoffs?

A. Yes. Your agency should keep a record of the date(s) the officers were laid off and the date(s) the positions were rehired with CHP funding in your award file for future monitoring or audit purposes. Please note that CHP funding is based on your agency's entry-level salary and benefits package and that any additional costs beyond entry-level for rehired officers are the responsibility of your agency.

Q. If my agency is awarded CHP funding to rehire officers who were laid off, when may we rehire those officers?

A. Your agency may rehire the officers on or after the official award start date. In addition, your agency should maintain documentation showing the date(s) that the positions were laid off and rehired.

Q. If my agency receives CHP funding to rehire officers that are scheduled to be laid off on a specific date in the future, do we need to maintain documentations in the CHP award file regarding the layoffs?

A. Yes. Your agency must keep documentation in your award file for future monitoring or audit purposes that shows

- the dates of the scheduled layoff(s);
- the number of officers scheduled to be laid off;
- the number of officers rehired with CHP funds;
- the date of the rehire(s);
- the reason(s) for the scheduled layoff(s).

Only layoffs that will occur for reasons unrelated to the receipt of CHP funds may be rehired with CHP funds.

Q. What kind of documentation may be helpful to demonstrate that the layoff(s) is not related to the receipt of CHP funds?

A. Any records showing that the layoff(s) occurred as a result of state, local, or BIA budget reductions. To show that the layoffs did not occur as a direct result of the availability of CHP funds, it is especially helpful to demonstrate that budget reductions occurred in the entire (or at least additional) municipal or tribal governmental departments, not just the law enforcement department—or, if budget reductions occurred only in the law enforcement agency's budget, that they were across all categories and not just sworn officer positions. Such documents might include (but are not limited to) (a) council meeting minutes discussing the budget reductions and layoffs; (b) budget orders directing municipal departments to reduce their operating budgets; (c) personnel directives given to the officers who are scheduled for layoff(s); (d) any other local documents explaining why the layoffs occurred; or (e) notices provided to the individual officers regarding the date(s) of the layoffs.

Q. Our agency has applied for CHP funding to rehire officers who are scheduled to be laid off on a specific date in the future. Do we need to actually lay off officers before using COPS funds and then rehire them?

A. Unless required by your jurisdiction, your agency is not required to formally complete the administrative steps associated with the layoff of the individual officers you are seeking to rehire. As long as your agency can document that a final, approved budget decision, unrelated to the receipt of CHP funding, was made to lay off those particular individual officers on the identified layoff date(s), it may transfer the officers to the CHP funding on or after the date of the layoff. However, it must continue to fund the officers with its own funds from the award start date until the date of the scheduled layoff (for example, if the COPS Office award start date is September 1 and the layoff is scheduled for November 1, then the COPS Office funds may not be used to fund the officers until November 1, the date of the scheduled layoff).

Post-Application Layoffs

Q. If our agency's economic conditions change after receiving a CHP award and we want to change the hiring categories from what we identified in our CHP application because of post-application layoffs, what should our agency do?

A. If your agency receives a CHP award and after receiving the award your agency needs to change the hiring category(s) it received funding under, your agency must request a post-award modification and must receive prior approval before spending CHP funding. To be considered for a post-application modification into the rehire post-application layoff category, an agency must demonstrate that the officers to be rehired were officially laid off post-application or are now officially scheduled for layoff on a specific future date as the result of financial reasons unrelated to the receipt of COPS Office funding.

The COPS Office will only consider a modification request into the rehire category for post-application layoffs after an agency has made final, approved budget or personnel decisions. To obtain information on modifying a CHP award, please contact the COPS Office Response Center at 800-421-6770 or send questions via email to AskCopsRC@usdoj.gov.

Q. How will the COPS Office monitor my agency's use of CHP funds for rehiring laid-off officers?

A. The COPS Office monitors recipient compliance with all award requirements in a variety of ways. For example, your agency may receive an onsite monitoring visit from the COPS Office during the award period or an onsite financial monitoring visit from the Office of Justice Programs, Office of the Chief Financial Officer, or it may be audited by the Office of the Inspector General's Audit Division. Your agency also may be asked to submit written documentation demonstrating its compliance with the award conditions or in response to evaluations by outside organizations.

Q. How long must we keep copies of all of these records to demonstrate when and why we rehired laid-off officers?

A. Your agency is required to maintain award records to demonstrate your proper use of award funds throughout the active award period and then for at least an additional three years after the submission date for the final expenditure report.

Q. How do you define a School Resource Officer (SRO)?

A. See the SRO Guiding Principles for the definition and roles of an SRO.

Q. May I apply for both SRO positions and non-SRO positions?

A. Yes. Applicants can request a combination of SRO and non-SRO positions.

Q. Are there any other application requirements if my agency wants to request CHP funds to hire SROs?

A. Recipients awarded CHP funding to hire and/or deploy SRO(s) into schools will be required to submit to the COPS Office a signed memorandum of understanding (MOU) between the law enforcement agency and the school partner(s) within 90 days of the start date of the award, and before expending or drawing down funds under the award. An MOU is not required at time of application; however, if the law enforcement agency already has an MOU in place that is applicable to the partnership, the MOU can be uploaded as an attachment under the Section in JustGrants titled "MOUs and Other Supporting Documents."

The MOU must contain the following: the purpose of the MOU; clearly defined roles and responsibilities of the school district and the law enforcement agency, with officers' roles focusing on safety, information sharing, supervision responsibility, and chain of command for the SRO; and signatures. The MOU is an agreement among parties that defines the roles and responsibilities of the individuals and partners involved, including SROs, school administrators, law enforcement and education departments, students, and parents. The MOU should explicitly state the proposed

programs and daily activities that the SRO will develop and/or administer. It should also address the policies and procedures and the extent to which information will be shared between the law enforcement agency and school or school district partners throughout the course of the award. The MOU should be signed by the law enforcement executive and designated representative for the school or school district who has general educational oversight within that jurisdiction.

Please refer to the MOU fact sheet at https://cops.usdoj.gov/chp for a full description of the MOU requirements, and to the SRO Guiding Principles for more information.

School Resource Officer Official Partner Contact Information (if applicable)

Applicants requesting funding for SROs should enter in contact information for each school partner where the SROs will be deployed, if known at time of application. This information is not required at the time of application but will be required for any agency awarded CHP funding for officers to be deployed as SROs.

Please note: COPS Office–funded SRO(s) are also required to complete a 40-hour SRO basic training course from any of a list of COPS Officer approved providers. Training must be completed no later than nine months after the date shown on the award congratulatory letter or six months from the SRO hire date, whichever comes first. If a COPS Office–funded SRO leaves the recipient agency after completing the training, the recipient agrees to pay for the new SRO, who is assigned to backfill this position, to attend a 40-hour basic training course. The new SRO must complete the training no later than nine months after being placed in the school. If the officer has completed the 40-hour basic training within the last 12 months prior to the award date, the condition has been fulfilled. Any gap longer than 12 months will require the officer(s) to retake the course.

Budget and Associated Documentation

Q. What is the budget submission process?

A. Applicants must complete the web-based budget worksheet form in JustGrants. No separate budget narrative is required. It is important to enter accurate information in the budget worksheet, as the information provided will be used to determine the amount of your CHP grant, if awarded.

Budget Worksheets and Budget Narrative Form

Budget requests may be made in the following categories:

- Personnel
- Fringe Benefits

Q. What are allowable costs / fundable requests?

A. The only allowable costs under CHP are the approved full-time, entry-level salaries and fringe benefits of newly hired or rehired sworn career law enforcement officers who are hired or rehired on or after the award start date. A "career law enforcement officer" is a person hired on a permanent basis who is

authorized by law or by a state, local, or tribal agency to engage in or oversee the prevention, detection, or investigation of violations of criminal laws (34 U.S.C. §10389(1)). The State of Alaska, and any Indian tribe or tribal organization in that state, may also use hiring funds for village public safety officers, defined as "an individual employed as a village public safety officer under the program established by the State pursuant to Alaska Statute 18.65.670" (Tribal Law and Order Act of 2010, Pub. L. 111-211, title II, § 247 (a)(2)).

Salaries: Funding requests must be based on the current entry-level salary and fringe benefits of a full-time sworn officer. CHP awards are subject to the restrictions described in the Program Description, including but not limited to the $125,000 maximum over three years and 25 percent match requirement (unless waived). Applicants budgeting for an increase in salaries and/or fringe benefits over the life of the award are required to provide an explanation.

Note: Requests will be capped at 20 percent of actual sworn force, with a maximum of 50 officers for any agency. For example, agencies with an actual sworn force of 30 will be allowed to request up to 6 positions. Agencies with fewer than 5 officers may request one position.

Q. How are fringe benefits defined under the CHP program?

A. Fringe benefits typically covered by the applicant agency, as specified in agency personnel and salary policies or contractual agreements, and allowable under 2 C.F.R. 200, will be allowed. Examples of allowable fringe benefits include Social Security, Medicare, insurance (life, health, dental, etc.), shift differential, retirement plans, and holiday pay.

The following are considered unallowable costs under the CHP program: **overtime costs, training, equipment (e.g., uniforms, weapons, or vehicles), severance pay, and hazard pay.** If your agency pays those benefits for locally funded officer positions, your agency will be required to use local funds to do so for CHP-funded officer positions.

For agencies that do not include fringe benefits (e.g., vacation, holiday, shift differential) as part of the base salary costs and typically calculate these separately, the allowable expenditures may be included with personnel costs. Any fringe benefits that are already included as part of the agency's base salary should not be repeated in the separate fringe listing.

Shift differential pay is a premium hourly rate paid for those hours that are not considered normal day work hours as defined by your agency. Typically, shift differential pay is for the hours worked outside of normal day work hours, where the majority of hours worked are from 3:00 p.m. of one day until 8:00 a.m. of the following day. This would include the evening shift, midnight shift, overlap shift or power shift, or any other designated shift between those hours that would qualify for the shift differential pay as defined by your agency and/or a contractual or union agreement. Overtime beyond any defined shift work hours is an unallowable cost under 2022 CHP.

Q. How do I determine the health care and fringe benefits costs for my agency?

A. An agency should contact its human resources/benefits office to help determine their costs for healthcare and fringe benefits.

Q. May CHP award funds be used to pay the salaries and benefits of officer recruits while they are in the academy, prior to being sworn in?

A. Yes, an agency may use CHP funding to pay the CHP-funded positions while in the academy if it is the standard practice of the agency to do so with locally funded recruits. To comply with the nonsupplanting requirement, the agency should hire the recruits post-award.

Q. How should an agency calculate the first-year salary and benefits package of officers who will be recruits promoted to sworn officer positions, given that a recruit and sworn officer fall under different pay and benefit levels?

A. The first-year salary and benefits package should cover the "blend" of both the recruitment academy and the post-graduation amounts, with the sworn officer salary and benefits amount used to cover the salary and benefits of the officer post-graduate.

Q. Are indirect costs allowable under the CHP award?

A. No, CHP funding may not be used for indirect costs. CHP only pays for approved entry-level salaries and fringe benefits of full-time sworn officers over three years.

Unallowable Costs: Requests will NOT be Funded

Q. What are unallowable costs under the COPS Hiring Program?

A. All items other than entry-level personnel costs (salaries and fringe benefits) as described in the preceding section are considered unallowable under CHP. Therefore, requests for equipment, training, uniforms, vehicles, and indirect costs are not permitted under CHP.

In addition, the following personnel costs are unallowable:

- Salaries and fringe benefits of existing locally funded officers, unless those officers are currently scheduled to be laid off on a specific future date
- Salaries and fringe benefits over and above an agency's entry-level salary and fringe benefits for officers
- Salaries and fringe benefits for civilian or nonsworn personnel
- Salaries and fringe benefits for part-time officer positions
- Salaries and fringe benefits for furloughed officers

- Overtime costs
- Severance pay
- Hazard pay

This is not an exhaustive list, and items not listed above will be reviewed on a case-by-case basis. The COPS Office reserves the right to deny funding for items that may not be included on this list. Agencies are expected to request items that show a direct link between the requested item and the applicant's CHP project. All requests must contribute directly to the specific purpose of the award project and relate to the appropriations language enacted for FY 2022.

Federal/Local Share of Costs

Q. What are CHP federal and local shares of costs?

A. The applicant will be required to indicate the total salary and benefits for the three-year salary period and the required local share. The minimum local match requirement is 25 percent of the total project cost, and the cap on the amount of federal award funding that can be requested per officer position is $125,000 over three years (36 months). Any additional cost above the local match and officer funding cap will be the responsibility of the recipient agency. Recipients are also required to pay a progressively larger share of the cost of the award with local funds over the award period. The applicant will also be asked for a projection of the planned federal and local shares of the total project costs over the three years of funding for each position. While your agency may deviate from these specific projections during the award period, it must still ensure that the federal share decreases and the local share increases over the three years.

Applicants are encouraged to forecast a federal-to-local ratio for anticipated expenditures for each year that will provide an increase in the annual local match. The percentages you provide in the application are estimates that can be used to help you plan the implementation of your award. Your actual percentages may change over the award period.

Waiver of local match (cost share)

The COPS Office may waive some or all of an applicant's local match requirement. During the application review process, your agency's waiver request will be evaluated based on the availability of funding, a demonstration of severe fiscal distress as supported by the fiscal health data provided in the application, and comparison of your fiscal health data with that of the overall CHP applicant pool. If your agency wishes to be considered for a waiver, you must respond to the applicable question. The question will ask you to indicate the maximum local share (dollar amount) your agency would be able to contribute to the total project cost in order to implement the award. Please indicate whether the COPS Office should continue to consider your application if the waiver request is not granted or whether it should be removed from consideration if the waiver is not granted. If a full or partial waiver is granted, and your application is funded for a reduced number of officer positions, the percentage of local share provided will be applied to the total project cost of the awarded officers.

Q. The officers we plan to rehire are experienced officers who are paid a higher than entry-level salary and benefits package. May we use the CHP funds to pay their salaries?

A. Yes, but only up to the entry-level portion of their salary and benefits package and up to $125,000 per officer over three years. CHP funds are awarded based on your agency's current entry-level sworn officer salary and benefits package. You may use CHP funding to hire or rehire experienced officers, but any additional costs higher than entry-level must be paid with local agency funds, not CHP funds.

Q. CHP states it will provide "up to 75 percent of funding for approved entry-level salaries and fringe benefits of full-time officers." How does this apply in cases where law enforcement agencies have various base pay rates based on the prior education level of the officer?

A. In the limited cases of agencies that offer more than one entry-level salary and benefits package based on prior education for new officers with no prior law enforcement experience, you may average those salaries and benefits to report your entry-level salary and benefits. Please note, however, that any higher salaries and benefits that are paid to compensate for prior law enforcement experience are not considered entry-level and should not be included in this average or otherwise reported as entry-level. If awarded CHP funding, an agency must only use CHP funding to pay the actual entry-level officer's salary and benefits, and any CHP funds remaining after the five-year period of performance will be deobligated.

Q. If awarded funding from the CHP program, will our agency be obligated to keep the total number of officers on staff at the time the award was granted, or are we only required to keep the award position at the end of the program?

A. To comply with the nonsupplanting requirement of the CHP award, the recipient must maintain its locally funded sworn force baseline and any planned increases of officer positions during the award period through the retention period. To comply with the retention requirement of the CHP award, the recipient must add all awarded officer positions to its law enforcement budget with state and/or local funds for at least 12 months at the conclusion of 36 months of federal funding for each position over and above the locally funded sworn force baseline. The purpose of CHP is to increase the total number of sworn officer positions above what would have otherwise existed in the absence of the award.

Nonsupplanting Requirement

Q. Does the nonsupplanting requirement apply to the CHP program?

A. Yes. The nonsupplanting requirement is a legal requirement in the Public Safety and Community Policing Act, which is the COPS Office's authorizing statute. The nonsupplanting requirement means COPS Office award funds must be used to supplement (not replace) state, local, or Bureau of Indian Affairs (BIA) funds that would have been dedicated toward law enforcement if federal funding had not been awarded. As it applies to your agency's CHP award, recipients must not reduce the level of state, local, or BIA funding that would have been dedicated toward sworn officer positions as a result of receiving federal funding. Requests may be made only for positions that are not otherwise budgeted with state, local, or BIA funds and that would not be funded in the absence of the CHP award.

CHP Funding and Other COPS Office Awards

Q. May our agency request funding under CHP if we have an active COPS Office hiring award for sworn officer positions?

A. Yes. Agencies with an active COPS Office hiring award are not disqualified from applying for a CHP award, but the CHP-funded position(s) must be over and above the number of officer positions funded in the agency's local budget and under any other COPS Office hiring award.

Note: Recipients may not use COPS Office funding for the same item or service also funded by another U.S. Department of Justice award.

Q. May CHP funding be used to retain officers hired under other COPS Office hiring programs?

A. No. CHP funding may not be used to comply with the retention requirement of your other COPS Office hiring awards. Instead, your agency must use state, local, or tribal funding to retain the COPS Office-funded positions for the required retention period following the conclusion of the award period. In addition, the retained officer position(s) must be over and above your agency's locally funded sworn force and any full-time sworn positions awarded under the CHP award.

Retention Requirement

Q. What is the retention requirement?

A. All applicants are required to affirm that their agency plans to retain all officer positions awarded, following three years of federally funded salary, for at least 12 months and to identify their planned source(s) of retention funding. The retention period may begin during the five-year period of performance of the award and may extend beyond the end date of the award. Agencies that do not plan to retain all officer positions under this award program at the time of application are ineligible to apply for CHP funding. The retention requirement cannot be satisfied through attrition. The retained CHP-funded officer positions should be added to your agency's law enforcement budget with state and/or local funds for at least 12 months over and above the number of locally funded officer positions that would have existed in the absence of the award. At the conclusion of federal funding, agencies that fail to retain the additional officer positions awarded under the CHP award for a period of 12 months may be ineligible to receive future COPS Office awards for a period of one to three years.

Q. What documentation does my agency need to maintain in the event of an audit or monitoring site visit to demonstrate compliance with the retention requirement?

A. Your agency should maintain documentation demonstrating its intent to retain the CHP-funded officer positions, the anticipated funding source(s), the employment dates for each officer position funded under the CHP award, and the date each officer position started the retention period.

Other Questions

Q. What is the formula for disbursing these CHP awards?

A. CHP is not a "formula" program. All applications will be reviewed based on their answers to the fiscal health questions, crime statistics, community policing strategy, and other relevant factors determined by the COPS Office. Awards will be made on a competitive basis.

Q. Are there priority focus areas in the FY21 COPS Hiring Program?

A. Yes. Additional consideration will be given to applicants who select one of the following focus areas as the area of focus: Building Legitimacy and Trust, Violent Crime/Gun Violence, Combating Hate and Domestic Extremism, and Police-based Response to Persons in Crisis.

Law enforcement agencies that submit applications addressing one of these focus areas in their proposals will receive priority consideration.

Q. When should I expect notification if awarded CHP funds?

A. The COPS office anticipates making CHP award announcements by September 30, 2022.

Q. Who do I contact if I need help?

A. For technical assistance with submitting the **full application** in JustGrants, contact the JustGrants Service Desk at JustGrants.Support@usdoj.gov or 833-872-5175. The JustGrants Service Desk operates 5:00 a.m. to 9:00 p.m. Eastern time (ET) Monday to Friday, and 9:00 a.m. to 5:00 p.m. ET on Saturday, Sunday, and federal holidays.

For programmatic and general assistance with the solicitation requirements, contact the COPS Office Customer Care Center at 800-421-6770 or by email at AskCOPSRC@usdoj.gov. The Customer Care Center's hours of operation are Monday–Friday (except U.S. Federal Government holidays–https://www.opm.gov/policy-data-oversight/snow-dismissal-procedures/federal-holidays/) from 9:00 a.m. to 5:00 p.m. Eastern Time (ET). The Customer Care Center will remain open on the solicitation closing date until **7:59 p.m. ET.**

AGENDA ITEM REPORT
10.3.

To:	City Council
Subject:	Consideration of a public hearing and possible action on Resolution No. R-2022-021 authorizing and creating the Estates of Hutto Public Improvement District within the City of Hutto pursuant to Chapter 372 Texas Local Government Code, providing an effective date, and related matters thereto. (Legal)
Meeting:	Thursday, June 2, 2022
Department:	Legal /
Staff Contact:	

BACKGROUND INFORMATION:

On September 16, 2021, Aaron Thomison & Brenda Thomison submitted and filed with the City a Petition for the Creation of a Public Improvement District to Finance Improvements to the Estates of Hutto Development requesting the establishment of the Estates of Hutto Public Improvement District covering approximately 53.122 acres with the City limits. The Petition estimated the total cost of the Authorized Improvements for the proposed District to be $8,000,000.00 (including issuance and other financing costs). On February 10, 2022, the City Council passed a resolution authorizing notice in the newspaper and notice to the landowners setting the public hearing for March 3, 2022 to consider whether to create the Estates of Hutto Public Improvement District. On March 3, 2022 the City Council opened the public hearing, received comments and recessed the public hearing until June 2, 2022.

SUMMARY OF REQUEST:

We request that this item be added to executive session.

STAFF REVIEW:

FINANCIAL IMPACT:

POLICY IMPLICATIONS:

ATTACHMENTS:

AGENDA ITEM REPORT
10.3.

CITY OF HUTTO

RESOLUTION NO. -___

RESOLUTION OF THE CITY OF HUTTO, TEXAS, AUTHORIZING AND CREATING THE ESTATES OF HUTTO PUBLIC IMPROVEMENT DISTRICT IN ACCORDANCE WITH CHAPTER 372 OF THE TEXAS LOCAL GOVERNMENT CODE; PROVIDING FOR RELATED MATTERS; AND PROVIDING AN EFFECTIVE DATE

WHEREAS, the City of Hutto, Texas (the "City") is authorized under Chapter 372 of the Texas Local Government Code, (as amended, the "Act") to create a public improvement district within the corporate limits of the City;

WHEREAS, on September 16, 2021, Aaron Thomison & Brenda Thomison (collectively the "Petitioner"), submitted and filed with the City a Petition for the Creation of a Public Improvement District to Finance Improvements to the Estates of Hutto Development (the "Petition") requesting the establishment of the Estates of Hutto Public Improvement District (the "District") covering approximately 53.122 acres, the boundaries of the proposed District described in Exhibit A (the "Property") attached hereto and incorporated herein for all purposes, said area for the District being within the boundaries of the City;

WHEREAS, the Petition estimated the total cost of the Authorized Improvements (as defined herein) for the proposed District to be $8,000,000.00 (including issuance and other financing costs);

WHEREAS, the City Council of the City (the "City Council") has reviewed the Petition and determined that the Petition satisfies the requirements of the Act and the City's PID Policy (the "PID Policy");

WHEREAS, on March 3, 2022 the City Council, by resolution, called a public hearing to be held on the creation of the proposed District and the advisability of the improvements and services for the District;

WHEREAS, after publishing notice of the public hearing in a newspaper of general circulation in the City, and mailing notice of the public hearing, all as required by and in conformity with the Act, at least 15 days before the date of the public hearing, the City Council conducted such public hearing on the creation of the proposed District and the advisability of the improvements and services for the District;

WHEREAS, all owners of the property located within the proposed District and all other interest persons were given the opportunity at the public hearing to speak for or against the creation of the District and the advisability of the improvements and services for the District;

WHEREAS, the City Council closed such public hearing on _____ 2022; and

NOW, THEREFORE, BE IT RESOLVED BY THE CITY COUNCIL OF THE CITY OF HUTTO, TEXAS:

SECTION 1. The findings set forth in the recitals of this Resolution are hereby found to be true and correct.

SECTION 2. The Petition submitted to the City was filed with the City and complies with Subchapter A of the Act and the PID Policy.

SECTION 3. Pursuant to the requirements of the Act, including, without limitation, Sections 372.006, 372.009(a), and 372.009(b), the City Council after considering the Petition and the evidence and testimony presented at the public hearing on March 3, 2022 hereby finds and declares:

(a) **Advisability of the Proposed Improvements**. It is advisable to create the District to provide the Authorized Improvements (as described below). The Authorized Improvements are advisable and desirable improvements for the District.

(b) **General Nature of the Authorized Improvements**. The general nature of the proposed public improvements are: (i) the establishment of parks and open space, together with the design, construction and maintenance of any ancillary structures, features or amenities such as trails, pavilions, community facilities, swimming pools, irrigation, walkways, lighting, benches, trash receptacles and any similar items located therein; (ii) landscaping; (iii) acquisition, construction, and improvement of water, wastewater and drainage facilities; (iv) acquisition, construction and improvement of streets, roadways, rights-of-way and related facilities; (v) entry monumentation and features; (vi) signage; (vii) projects similar to those listed in subsections (i)-(iv) above; and (viii) payment of costs associated with construction and financing the public improvements listed in subparagraphs (i)-(vii) above, including costs of establishing, administering and operating the District.

(c) **Estimated Costs of the Authorized Improvements**. The estimated total costs of the Authorized Improvements is $8,000,000.00 including issuance and other financing fees.

(d) **Boundaries of the District**. The District is proposed to include approximately 53.122 acres of land located within the City, generally located on the northeast corner of CR 133 and CR 132, as more particularly described by the metes and bounds description attached hereto as Exhibit A.

(e) **Proposed Method of Assessment**. The City shall levy an assessment on each parcel of the Property within the District in a manner that results in imposing equal shares of the costs on property similarly benefitted. Any assessments may be paid in full at any time (including interest and principal), and, if not paid in full, may be paid in annual installments (including interest and principal). If an assessment is allowed to be paid in installments, then the installments must be

paid in amounts necessary to meet annual costs for those Authorized Improvements financed by the assessments, and must continue for a period necessary to retire the indebtedness for those Authorized Improvements.

(f) **Proposed Apportionment of Cost between the District and the City**. Approval and creation of the District will not obligate the City to provide any funds to finance the Authorized Improvements. All of the costs of the Authorized Improvements will be paid from assessments levied on the property within the District and from other funds, if any, available to the owners of the property.

(g) **Management of the District**. The District shall be managed by the City, or, to the extent allowed by law, the City may contract with either a non-profit, or a for-profit organization including a Public Facilities Corporation created by the City pursuant to Chapter 303, Texas Local Government Code, to carry out all or a part of the responsibilities of managing the District, including the day-to-day management and administration of the District. Pursuant to the PID Policy, the annual update, including any annual costs, for the District is subject to review by the City staff with final approval by the City Council.

(h) **Advisory Board**. The District shall be currently managed without the creation of an advisory body. The City Council reserves the right to appoint an advisory body in the future.

SECTION 4. The Estates of Hutto Public Improvement District is hereby authorized and created as a public improvement district under the Act in accordance with the findings of the City Council as to the advisability of the Authorized Improvements and services for the District contained in this Resolution. The Authorized Improvements are authorized to be made in accordance with the service and assessment plan for the Estates of Hutto Public Improvement District and other agreements between the City and the Petitioner to be approved by the City Council at a future meeting.

SECTION 5. Notice of this Resolution authorizing the District shall be given by publishing such notice once in a newspaper of general circulation in the City. Effective upon the publication of such notice, the District shall be established.

SECTION 6. This Resolution shall take effect immediately from and after its passage and publication as required by law.

[Signature page follows.]

PASSED & APPROVED by the CITY COUNCIL of BASTROP CITY, on the_____ day of _____, 2022 on vote of ___ AYES; __ NAYS; ___ABSTENTIONS.

_____

MIKE SNYDER, MAYOR
CITY OF HUTTO

ATTEST:

_____

ANGELA WALTON
INTERIM CITY SECRETARY
CITY OF HUTTO

Exhibit A

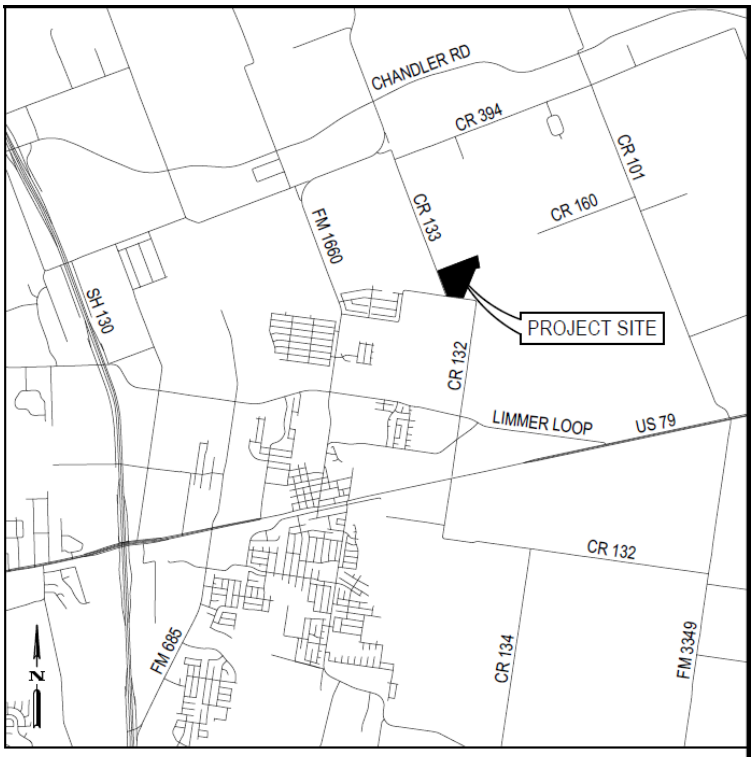

VICINITY MAP

FIELD NOTES FOR A 53.122 ACRE TRACT OF LAND OUT OF THE PATRICK O. DAUGHERTY SURVEY, ABSTRACT NO. 184, WILLIAMSON COUNTY, TEXAS AND BEING ALL OF THE CALLED 53.12 ACRE TRACT OF LAND CONVEYED TO AARON THOMISON AND BRENDA THOMISON BY GENERAL WARRANTY DEED RECORDED IN DOCUMENT NUMBER 2018002933 OF THE OFFICIAL PUBLIC RECORDS OF WILLIAMSON COUNTY, TEXAS; SAID 53.122 ACRE TRACT OF LAND BEING MORE PARTICULARLY DESCRIBED BY METES AND BOUNDS AS FOLLOWS:

BEGINNING at a 1/2-inch iron rod found on the east right-of-way line of County Road 133 (R.O.W. varies), at the northwest corner of the above described Thomison 53.122 acre tract, being the southwest corner of a called 242.46 acre tract of land conveyed to Hutto 525 Development Partners, LP by Special Warranty Deed recorded in Document Number 2020119607 of the Official Public Records of Williamson County, Texas, for the northwest corner and the POINT OF BEGINNING of the herein described tract;

THENCE, with the north line of the said Thomison 53.122 acre tract, N 68°53'20" E a distance of 2,053.42 feet to a 5/8-inch iron rod found for the northeast corner of the herein described tract;

THENCE, with the easterly line of the said Thomison 53.122 acre tract, S 10°08'27" E a distance of 590.89 feet to a 1/2-inch iron rod found with plastic cap stamped "RPLS 5345" at an interior corner of a called 79.11 acre tract conveyed to Alvin T. Murphy by Deed recorded in Volume 504, Page 62 of the Deed Records of Williamson County, Texas for the most easterly exterior corner of the herein described tract;

THENCE, continuing with the easterly line of said Thomison 53.122 acre tract, S 76°39'10" W a distance of 206.91 feet to a 6-inch by 6-inch square concrete monument found for an interior corner of the herein described tract;
THENCE, continuing with the easterly line of said Thomison 53.122 acre tract, S 22°39'49" W a distance of 1,526.74 feet to a 1/2-inch iron rod found on the north right-of-way line of County Road 132 (R.O.W. varies), at the southwest corner of the said Murphy 79.11 acre tract, for the southeast corner of the herein described tract;
THENCE, with the north right-of-way line of said County Road 132, N 82°31'11" W a distance of 766.07 feet to a 3/4-inch iron rod found on said north right-of-way line, for the most southerly southwest corner of the herein described tract;
THENCE, leaving the north right-of-way line of said County Road 132 with the southwest line of the said Thomison 53.122 acre tract, N 54°51'14" W a distance of 16.24 feet to a 3/4-inch iron rod found on the east right-of-way line of said County Road 133, for the most westerly southwest corner of the herein described tract;

THENCE, with the east right-of-way line of said County Road 133, N 21°01'25" W a distance of 1,274.43 feet to the POINT OF BEGINNING and containing 53.122 acres of land, more or less.

AGENDA ITEM REPORT
11.1.

To:	City Council
Subject:	Consideration and possible action regarding possible appointments, re-appointments and/or removals to City Boards, Commissions, Task Forces, Economic Development Corporations, Local Government Corporations and Tax Increment Reinvestment Zone Boards, City Council Liaisons, and Area Government appointments.
Meeting:	Thursday, June 2, 2022
Department:	City Secretary /
Staff Contact:	

BACKGROUND INFORMATION:

SUMMARY OF REQUEST:

STAFF REVIEW:

FINANCIAL IMPACT:

POLICY IMPLICATIONS:

ATTACHMENTS:

AGENDA ITEM REPORT
11.2.

To:	City Council
Subject:	Discussion on the FY 2023 budget process and major revenues (Angie Rios)
Meeting:	Thursday, June 2, 2022
Department:	Finance /
Staff Contact:	Angie Rios

BACKGROUND INFORMATION:

State law requires a municipality to adopt a budget for the next fiscal year before the end of the current fiscal year. The FY 2023 budget will be the first complete budget process by the current management and City Council. The presentation will cover information that will be important in the budget process.

SUMMARY OF REQUEST:

STAFF REVIEW:

FINANCIAL IMPACT:

POLICY IMPLICATIONS:

ATTACHMENTS:

City Council Budget Workshop

FY 2022- 2023 Budget

June 2, 2022

AGENDA

- FUND DESCRIPTIONS
  - CITY DEPARTMENTS
- MAJOR SOURCES OF REVENUES
- PERSONNEL
- KEY FINANCIAL DATA
- BUDGET CALENDAR

FUND DESCRIPTIONS

FUND DESCRIPTIONS

GENERAL FUND - accounts for all financial resources except those accounted for in another fund and includes basic governmental services.

- **Major Sources of Revenues include:**
  - **Ad Valorem Tax**
  - **Sales and Use Tax**
  - **Franchise Fees – Telephone, Cable, Electric, Solid Waste, City Utilities**
  - **Permits and Licenses**
  - **Fines**
  - **Drainage fees**
  - **Charges for Services – Parks & Rec fees, Credit Card fees, Events Revenue**

FUND DESCRIPTIONS

General Fund Departments

- **Administration – City Manager's office, Council, Human Resources, and Economic Development.**
- **Financial Services – Finance and Municipal Court.**
- **Business & Development Services – Planning & Development**
- **Public Works – Construction Inspection and Streets & Drainage**
- **Police**
- **Communications – City Secretary, Communications, Community Outreach & Programs, Information Technology and Library**
- **Community Services – Parks and Recreation, Building Maintenance, and Fleet Management**

FUND DESCRIPTIONS

Utility Funds

- **Public Works – Water & Wastewater administration and operations**
- **Utility Billing – Customer Service and Utility Billing**
- **Utility Impact Fees - Water and Wastewater Impact Fee revenues are restricted to projects identified in the development of those fees.**
- **Solid Waste Fund**

FUND DESCRIPTIONS

SPECIAL REVENUE FUNDS –

- **Court Funds –**
  - **State mandated fees charged with fines**
  - **Restricted for use on technology, security, jury or truancy programs**
- **PEG Fund –**
  - **Fees are received from the cable providers**
  - **Restricted for use on public access broadcasting, educational media and broadcasting, or government access television**
- **Hotel Tax Fund –**
  - **Occupancy taxes collected by local hotels**
  - **Restricted for use on advertising and events that would bring tourists in**
- **Park Improvement Fund –**
  - **Fees paid by developers in lieu of park land**
  - **Restricted for use on park improvements or park land acquisition**
- **Traffic Improvement Fund –**
  - **Traffic impact fees paid by developers**
  - **Restricted for use on projects identified in the impact fee plan**

FUND DESCRIPTIONS

DEBT SERVICE FUNDS–

General Government Debt Service

- **Major Sources of Revenue: Ad Valorem Tax**
- **Pays interest and principal on general government long term debt**

Utility Debt Service

- **Major Source of Revenue: Utility revenue and impact fees**
- **Pays Principal and Interest on Utility long term debt**

MAJOR SOURCES OF REVENUE

AD VALOREM TAX

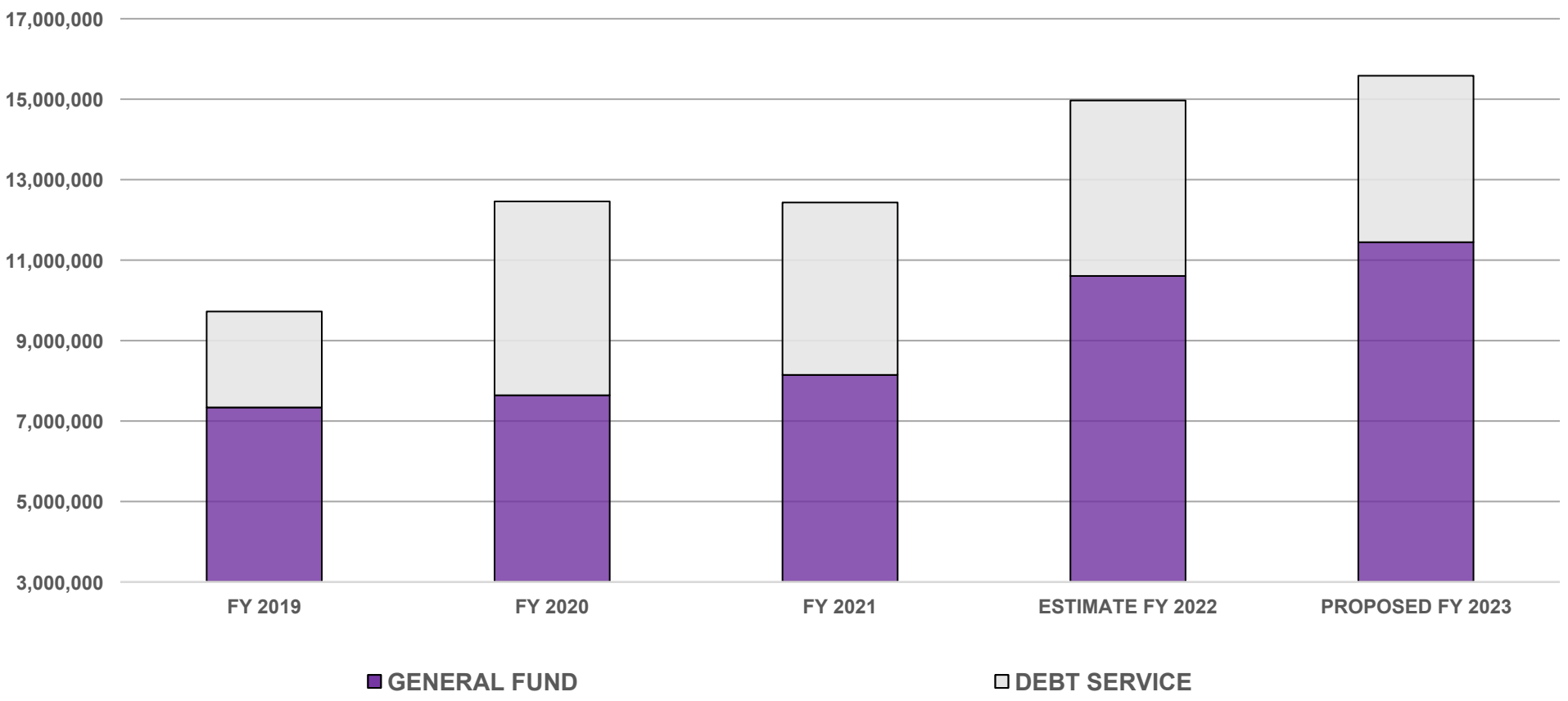

SALES TAX

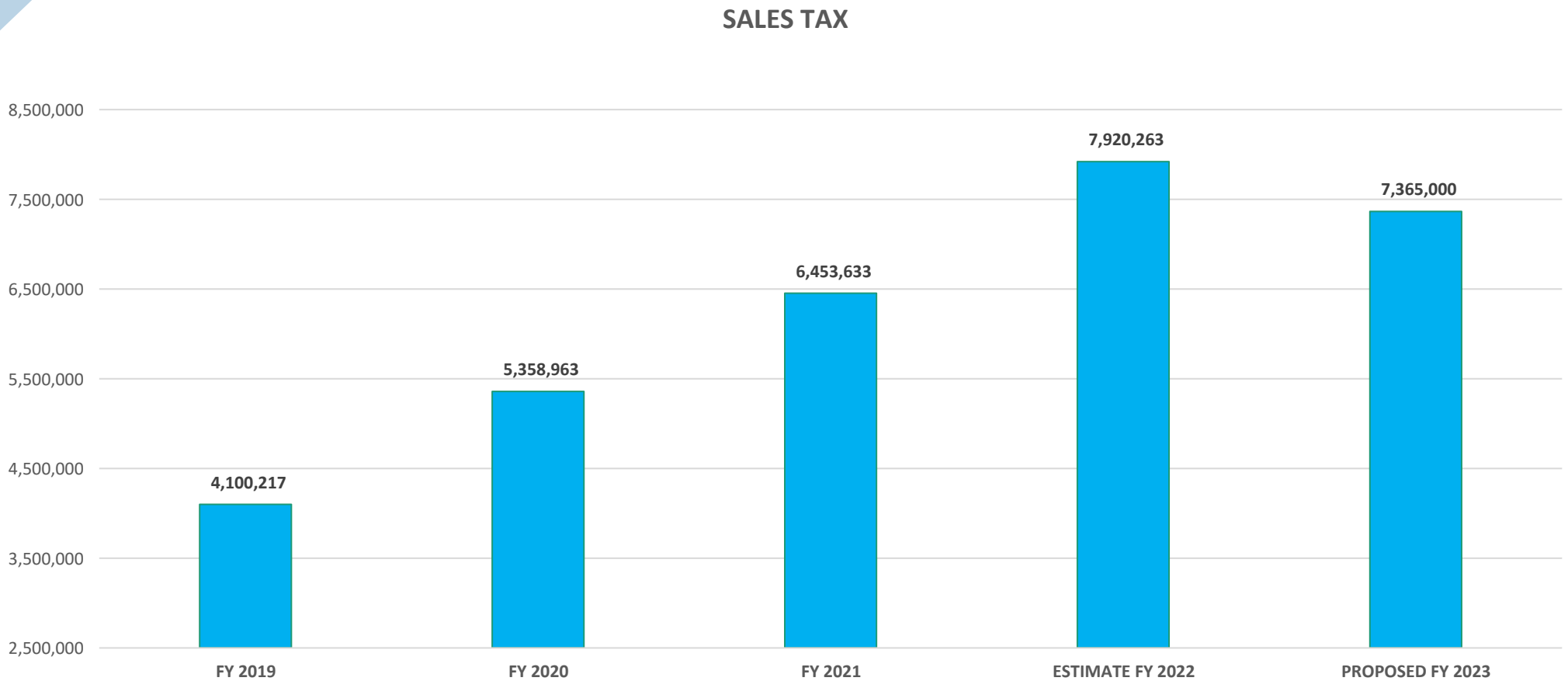
SALES TAX
8,500,000
7,500,000
6,500,000
5,500,000
4,500,000
3,500,000
2,500,000
4,100,217
5,358,963
6,453,633
7,920,263
7,365,000
FY 2019
FY 2020
FY 2021
ESTIMATE FY 2022
PROPOSED FY 2023

FRANCHISE FEES

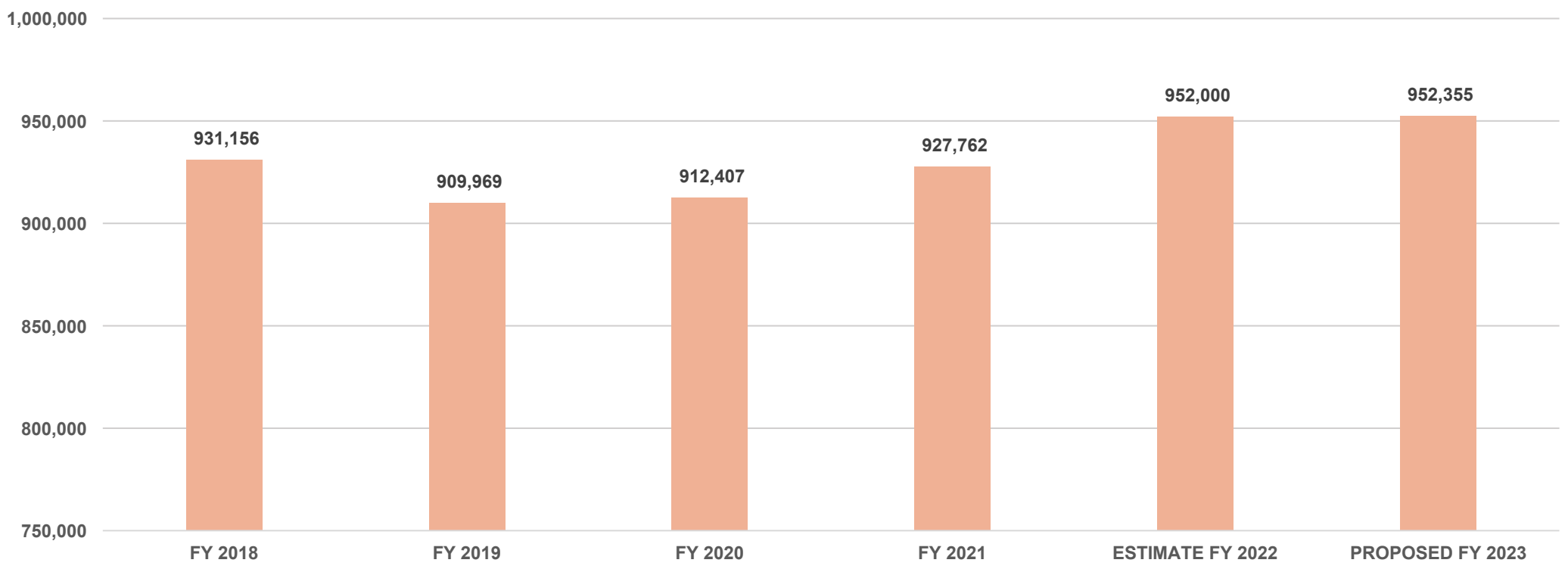

PERMITS AND LICENSES

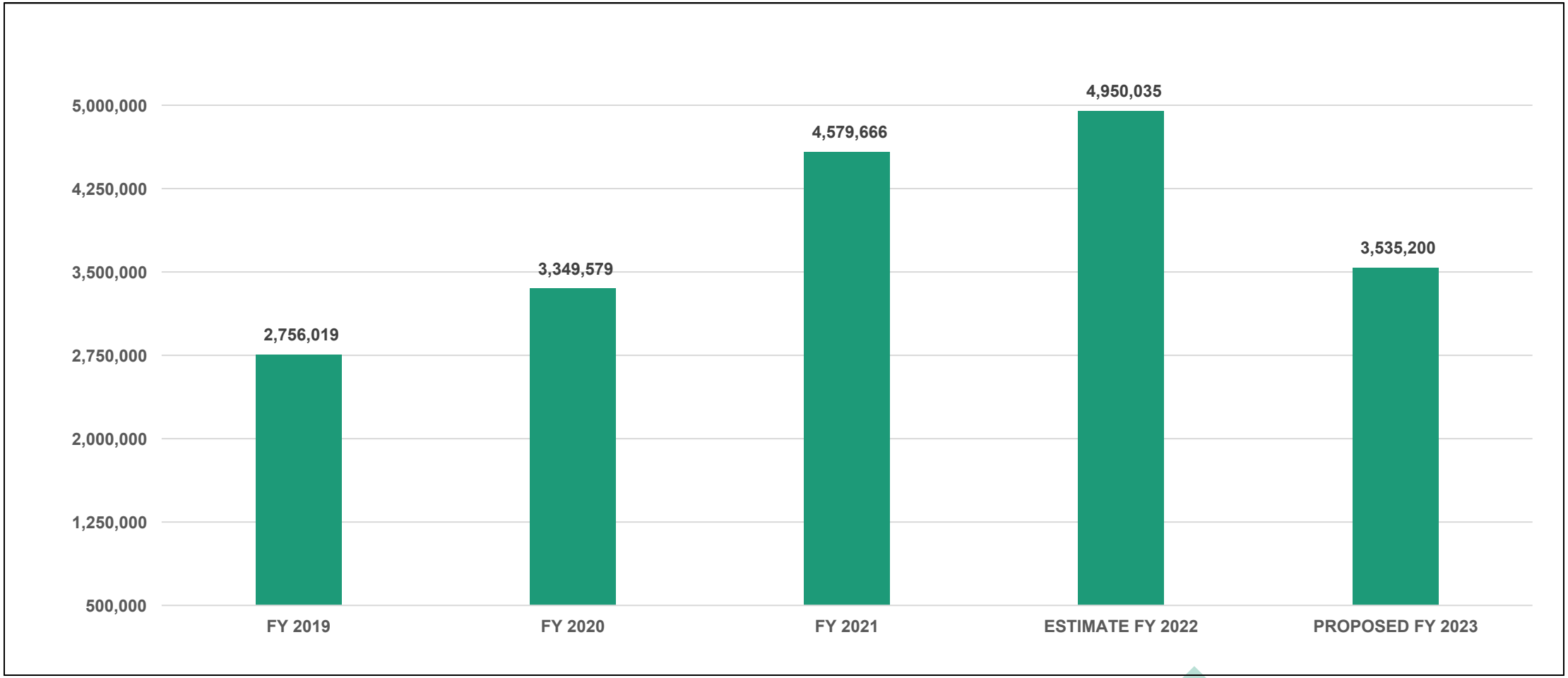

FINES

350,000
300,000
250,000
200,000
150,000
100,000
50,000
$ 314,003
$ 237,371
$ 249,259
$ 252,751
$ 283,000
FY 2019
FY 2020
FY 2021
ESTIMATE FY 2022
PROPOSED FY 2023

GENERAL GOVERNMENT REVENUES BUDGET COMPARISON

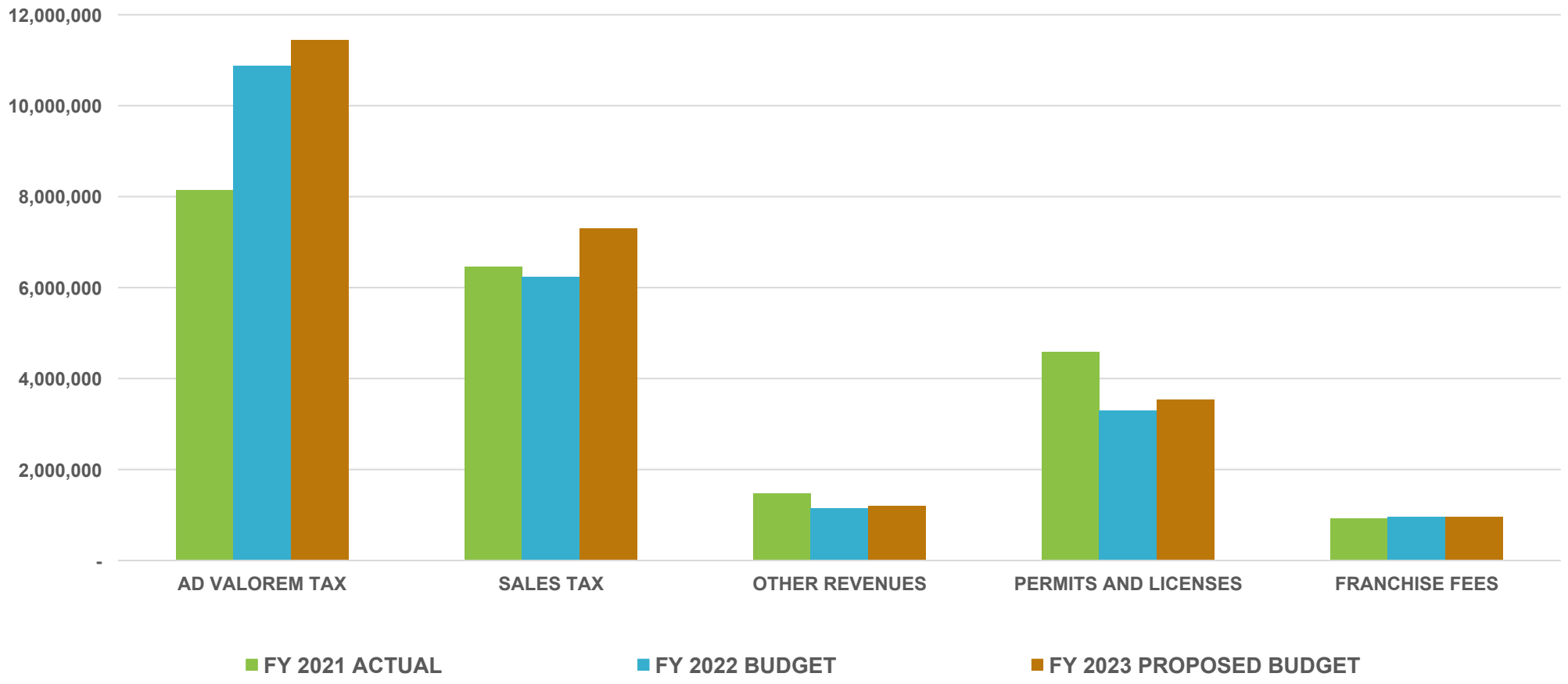

BUDGETED GENERAL FUND REVENUES FY 2023

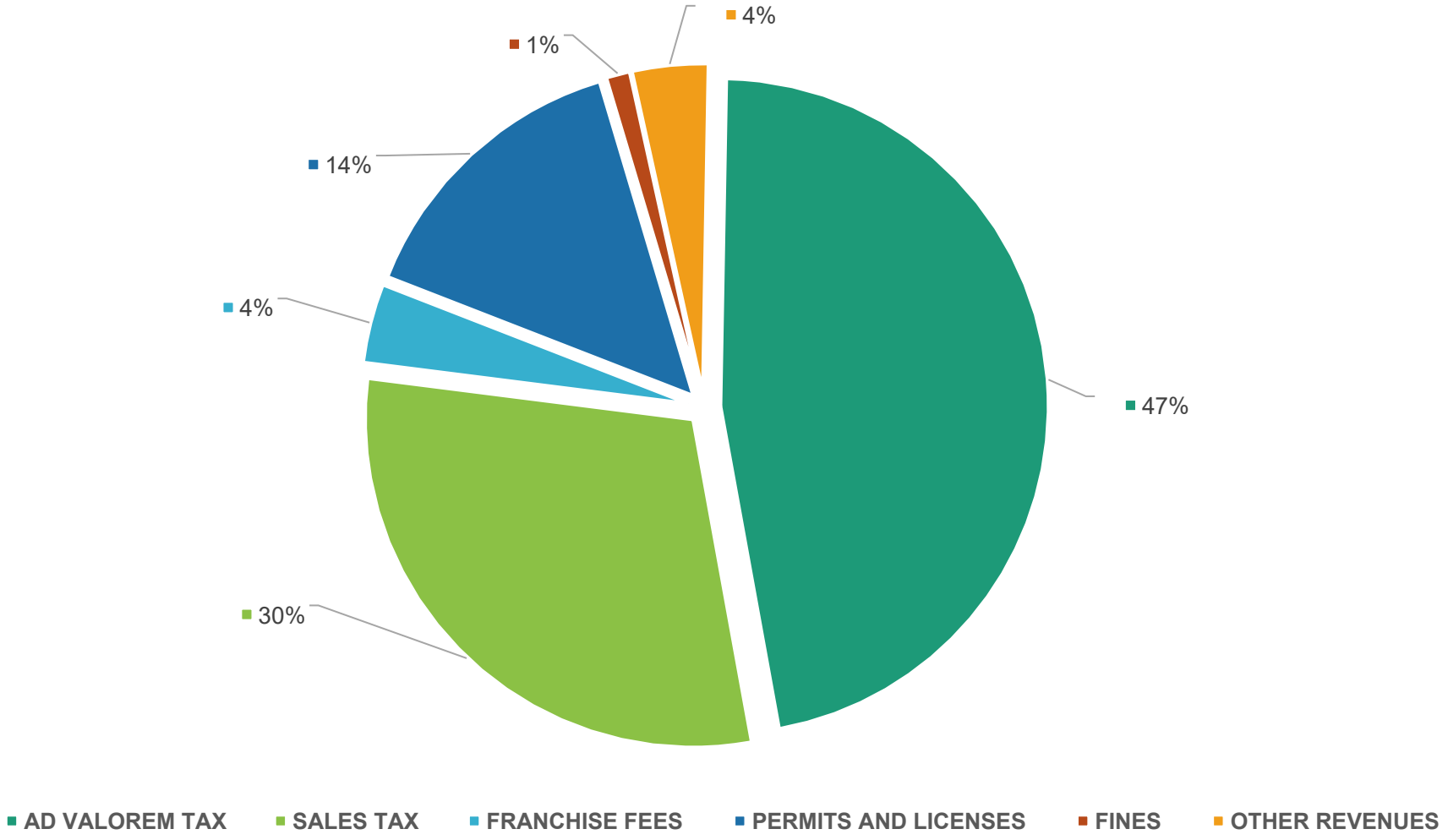

FY 2023 WATER SALES BUDGET

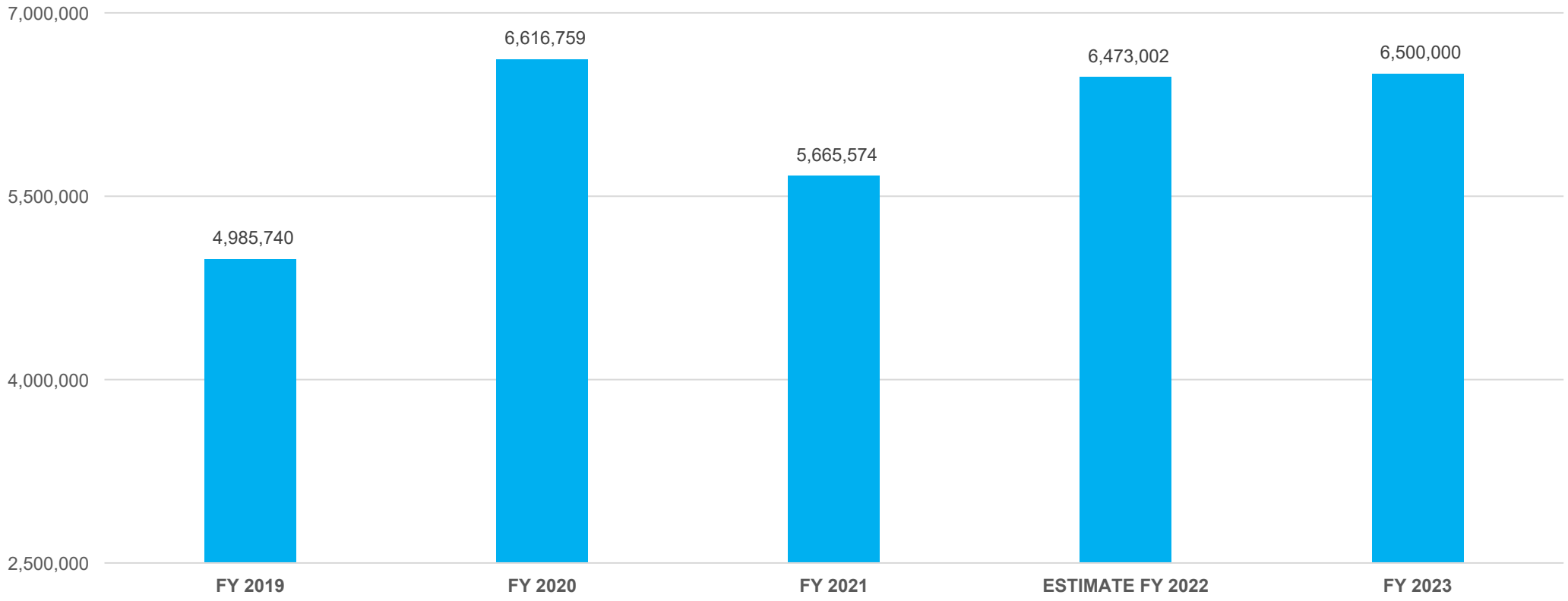

WASTEWATER SALES

FY 2023 UTILITY REVENUES BUDGET

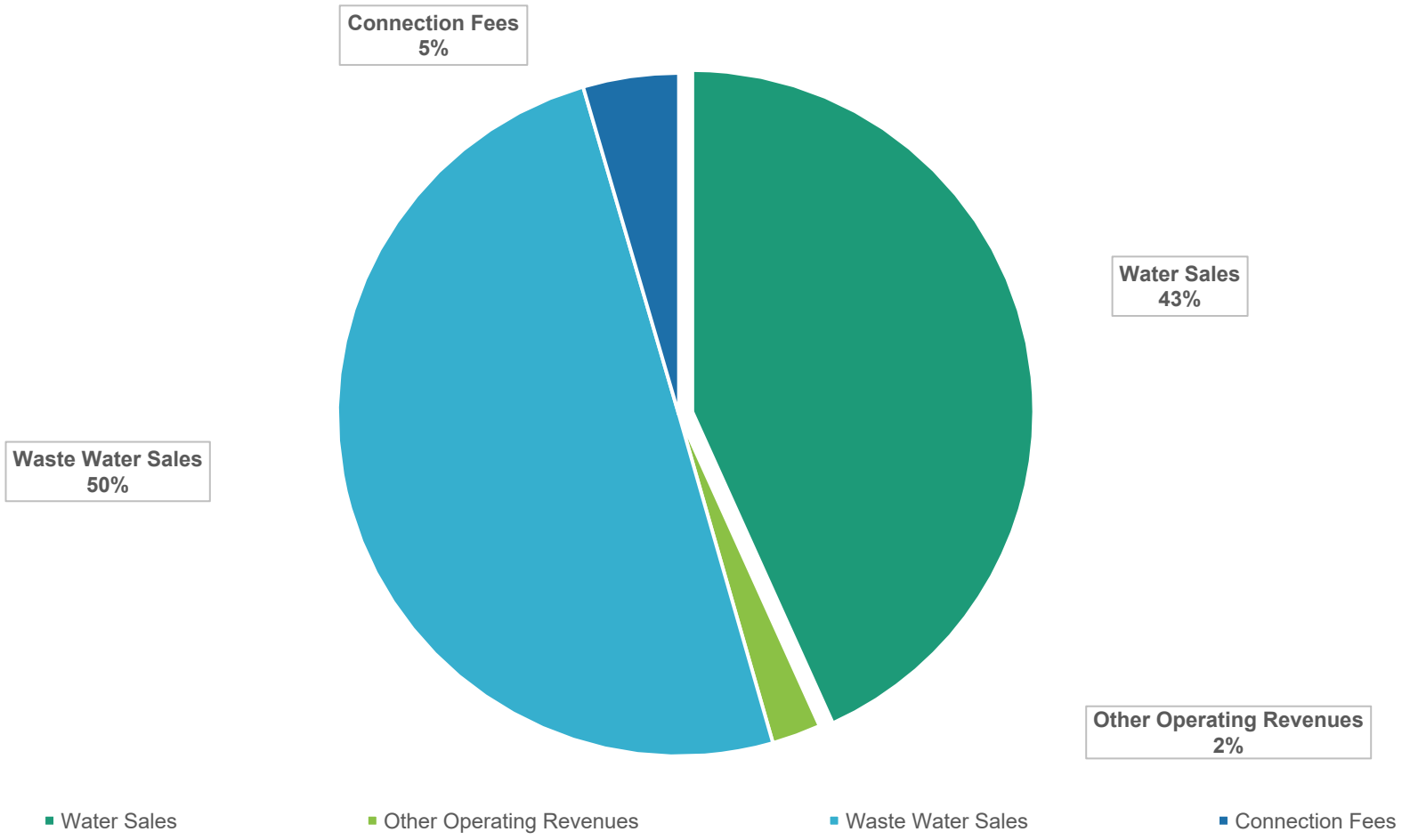

PERSONNEL

CITYWIDE PERSONNEL

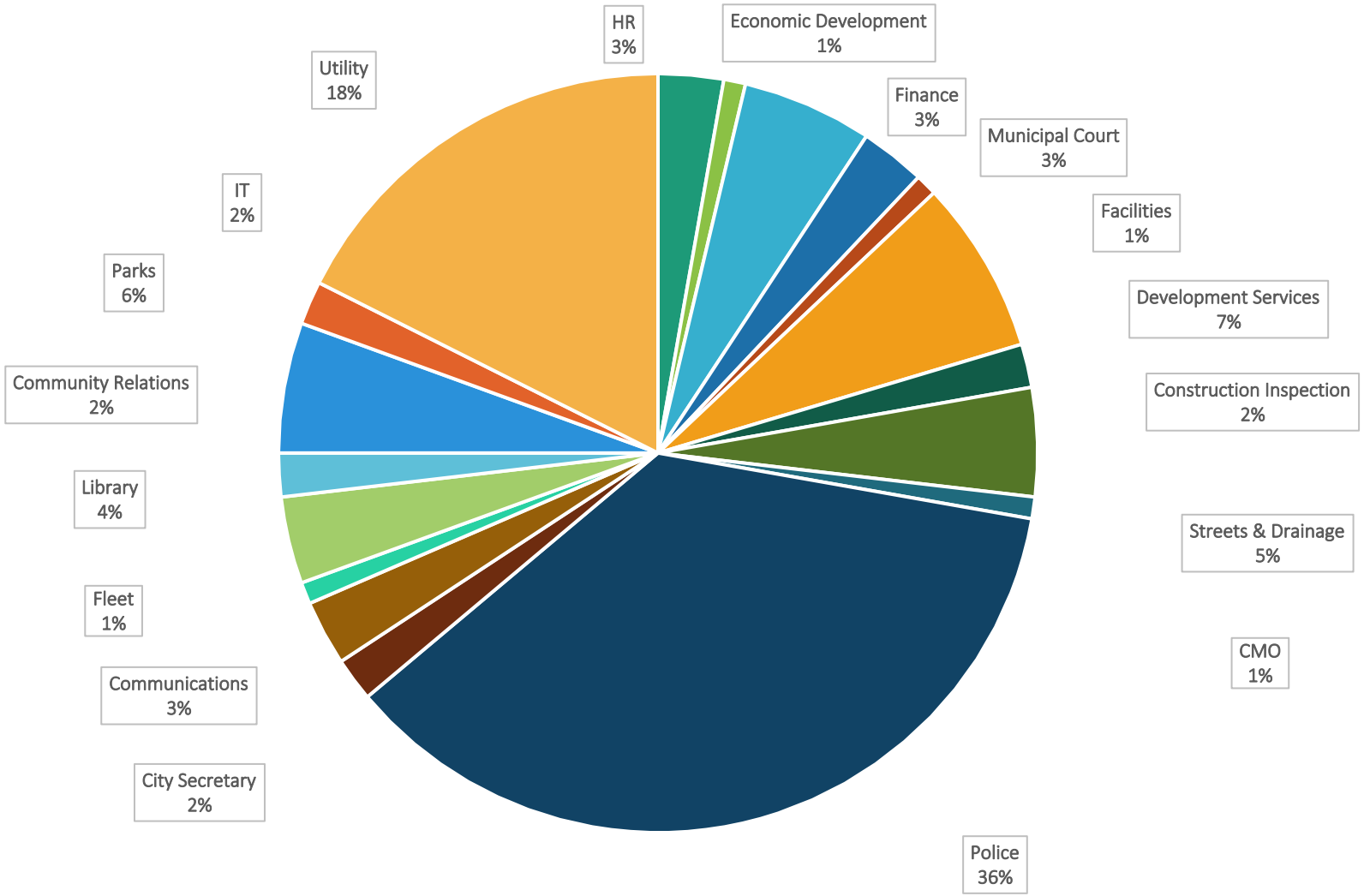

CITYWIDE FRINGE SALARIES/BENEFITS

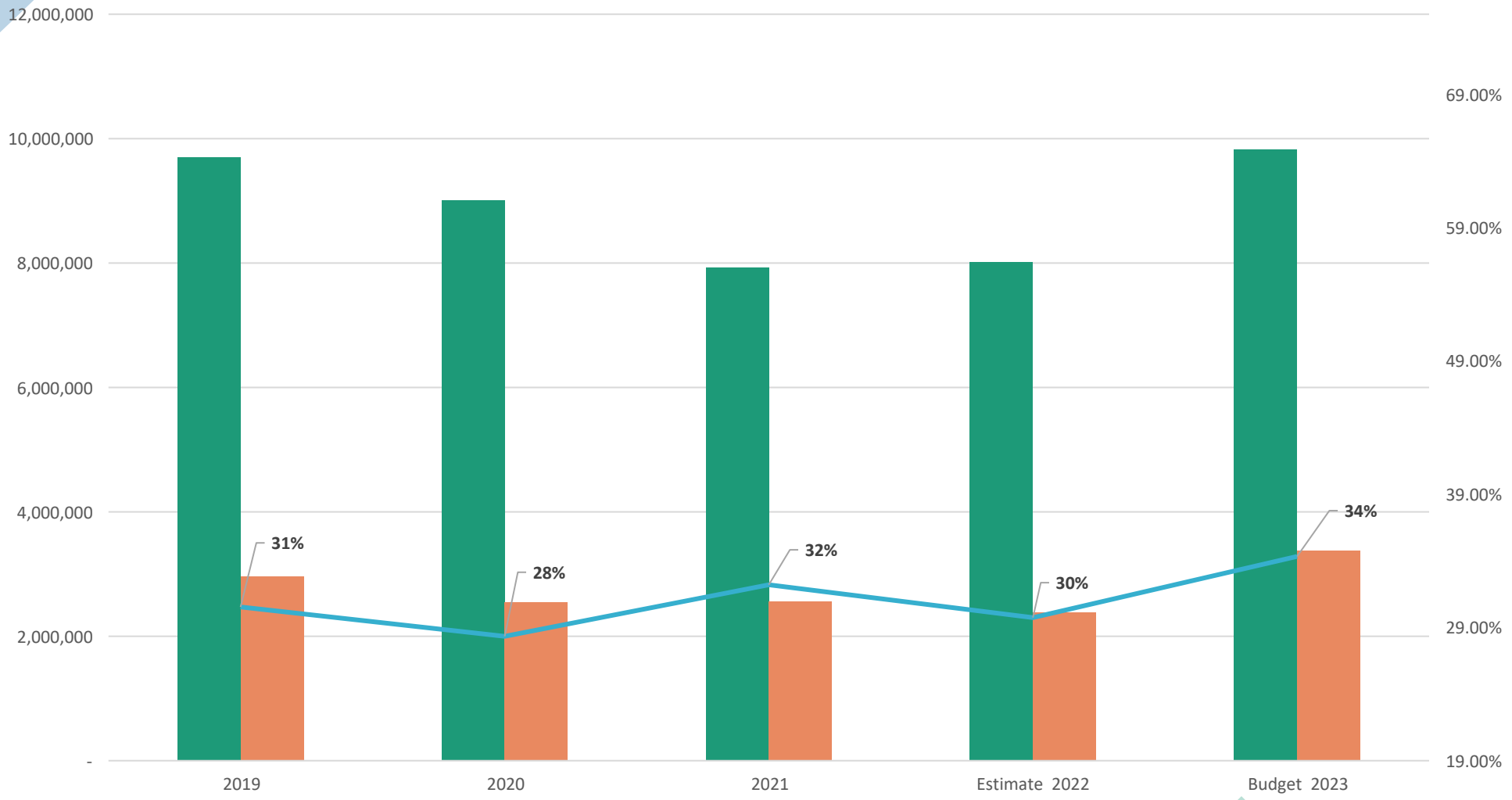

PERSONNEL INCREASES

- Merit / Bonus / COLA
  - Cost of each 1% increase

General Fund	$	81,128
Utilities	$	14,349
Total All Funds	**$**	**95,477**

KEY FINANCIAL DATA

KEY FINANCIAL DATA

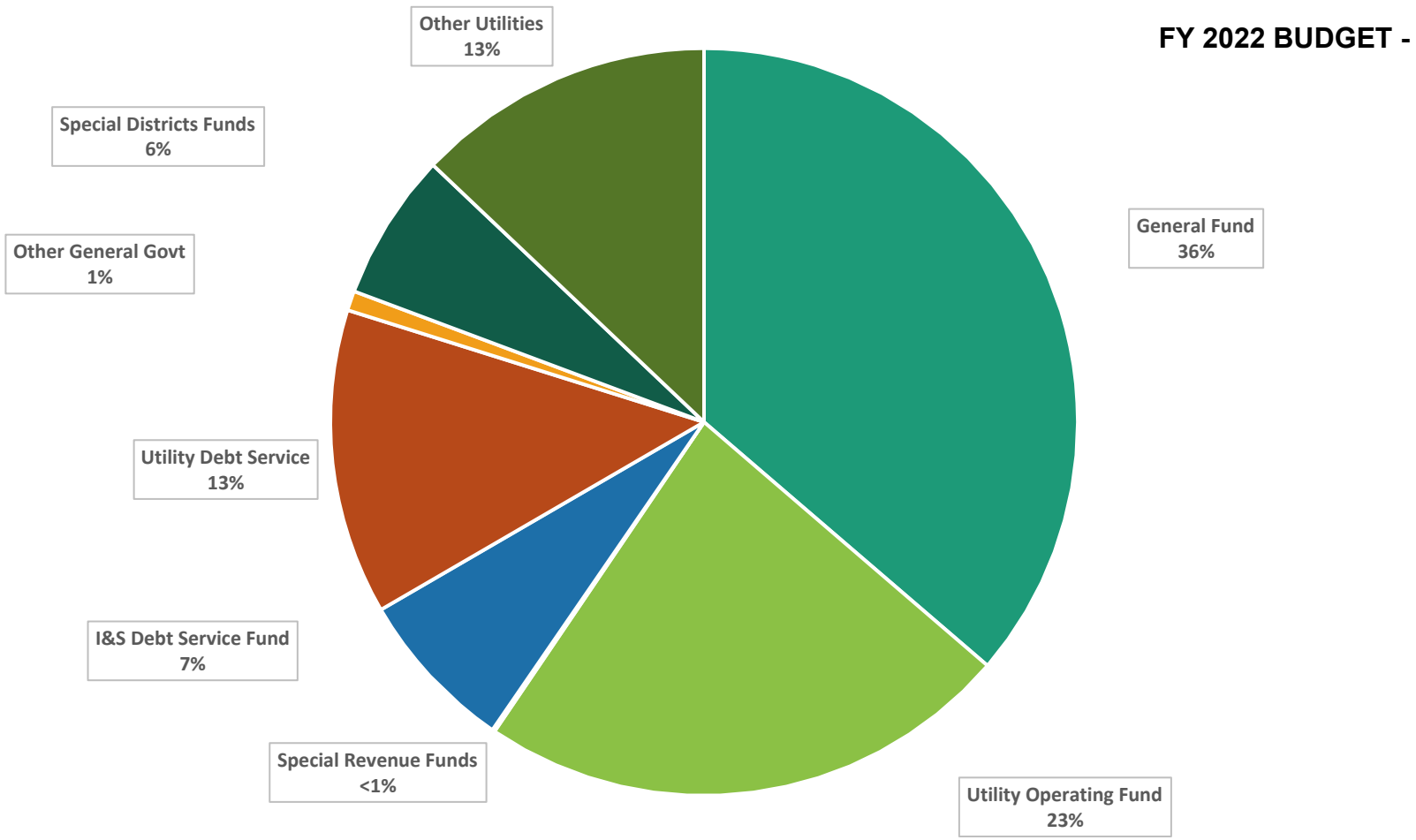

KEY FINANCIAL DATA

- Inflation Rate
  - CPI index rose 8.3% (12 months ended April 2022)
- Employee Cost Index (state and government workers)
  - Wages and salaries – 3.1% increase
  - Benefit costs – 3.5% increase
  - Overall compensation costs – 3.2% increase

KEY FINANCIAL DATA

TOTAL OUTSTANDING DEBT	TOTAL
I&S Tax Supported	$53,142,828
Water & Wastewater Supported	$123,526,792
HEDC Sales Tax Revenue Debt	$8,540,000
Total	**$185,235,534**

BUDGET CALENDAR

BUDGET CALENDAR

June 2nd	Budget overview presentation
June 6th	Draft 1 complete
June 16th	Council budget presentation
July 7th	Council budget presentation
July 21st	Council budget presentation
August 4th	Deliver proposed budget
September 1st	Budget hearing and first reading of the budget, tax rate public hearing (if necessary)
September 15th	Vote to adopt the budget, vote to adopt tax rate

AGENDA ITEM REPORT
11.3.

To:	City Council
Subject:	Consideration and possible action on the Outside Agency Funding (OAF) Process (Kristi Robich, Angie Rios)
Meeting:	Thursday, June 2, 2022
Department:	City Council /
Staff Contact:	Kristi Robich, Angie Rios

BACKGROUND INFORMATION:

Staff recommendation for FY2023 Outside Agency Funding Process.

SUMMARY OF REQUEST:

A committee composed of staff and city councilmembers will review applications. The proposed timeline is below:

June 3: Post OAF Applications to website and promote on social media/newsletter/email (if approved at June 2nd City Council Meeting)

June 27: OAF Workshop (open to any interested non-profits applying for funding)

July 8: Application Deadline

July 12: Committee meets (made up of councilmembers and staff)

July 19: Committee Final Review

August 18: Committee presents recommendations to city council (for possible action and approval)

STAFF REVIEW:

FINANCIAL IMPACT:

POLICY IMPLICATIONS:

ATTACHMENTS:

AGENDA ITEM REPORT
11.3.

Outside Agency Funding Application FY 2022-23

Applications due no later than **5 pm on July 8, 2022.**

Incomplete applications and/or applications submitted after the deadline will not be considered.

Organization: _____

Instructions:

1. Review all funding criteria and documentation requirements prior to completing the application.
2. Complete application.
3. Compile required attachments
    a. Current Board Members (name and profession)
    b. Board Policy
    c. Articles of Incorporation
    d. Financial Audit (most recent), Management Letter & Response
    e. IRS Letter of Tax Status
    f. IRS Form 990 (most recent)
    g. Current Year Balance Sheet (indicate ending month)
    h. Prior Year Balance Sheet
    i. Volunteer Policies
    j. Staff Organizational Chart
    k. Organizational Evaluation Tool and/or Performance Measures
    l. Letters of Support (Optional)

    If unable to provide any of the above attachments, a narrative must be provided as to why the attachment(s) cannot be submitted.

4. Submit two (2) copies of the funding application and two sets of attachments.
    - One copy should be submitted unbound and unstapled.
    - The second copy should be an electronic version of the application and all supporting documents.

    Packets will be distributed to Council Members and City staff for review. Make sure all required attachments are included.

    Completed application packets should be directed to:

City of Hutto
Attention: Kristi Robich
500 W. Live Oak
Hutto, TX 78634
512-759-4059

Kristi.Robich@HuttoTX.gov

Organization: _____

City of Hutto Outside Agency Funding Criteria

Outside Agency Funding – The City Council may fund a number of outside agencies and organizations that provide core services for the citizens of Hutto. The amount of funding received by each agency depends upon Council direction and the availability of funds. The City Council may fund up to 1.0% of the estimated General Fund revenues during the budget process.

Funding Process - All agencies shall have a standardized process for application, review, monitoring, and reporting. All agencies are required to submit applications for funding to the City during the budget process. Applications will include the following:

a. Information about the organization including organization's purpose, charter, board of directors, etc.
b. Copy of organization's financial policies.
c. Copy of prior year's tax filing demonstrating non-profit status.
d. Copy of prior year's audit or financial review for organizations whose operating budget exceeds $100,000 annually.
e. Agencies will need to provide a list and description of what the funding from the prior year was used for and program measures that indicate the increased success of the program due to the funding.

Funding of non-profit agencies through public funds require enhanced guidelines for spending and operations which shall include:

a. Funding will typically be used for specific programs, rather than for general operating costs, and demonstrates the program's sustainability beyond a three-year funding period.
b. The City shall have the ability to review financial reports to monitor how public funds are utilized by an organization.
c. Other items may be addressed by the City Council as specified in each organization's Outside Agency Funding Agreement.

The Williamson County Crisis Center (Hope Alliance), Williamson County Children's Advocacy Center, and the Williamson County and Cities Health District will be considered a budgeted line-item. All other outside agencies and organizations will go through the Outside Agency Funding process.

The City Council will review requests from other agencies and award based upon available funding. Applications will be evaluated on the following criteria:

a. Number of Hutto citizens served by the organization;
b. Type of service provided and whether other organizations in the community provide the service;
c. Availability of other funding sources for the organization;
d. Demonstration of ability to adhere to the guidelines outlined by this policy;
e. The City Council prefers to allocate funding based upon the following guideline:
    1) Education
    2) Quality of Life
    3) Social Services
    4) Public Health and Safety – The City Council may provide additional funding above the designated 1.0% to support governmental organizations that provide public health and safety services to the Hutto Community. An example includes membership in the Williamson County and Cities Health District.

All funded agencies shall be required to submit quarterly reports with performance data unless otherwise specified.

Organization: _____

Strategic Guide

Vision

Hutto, Texas is a family-friendly community that provides superior public safety, outstanding fiscal responsibility, diversified economy, and an exceptional quality of life.

Values

Responsible – *We expect those acting on behalf of the organization to consistently show responsibility. Being responsible entails being trustworthy to do what is in the best interest of the community and the City organization and being accountable for our own individual actions.*

Safe – *We expect those acting on behalf of the organization to consistently have a high regard for the safety of all involved, including our residents, visitors, volunteers, employees, and their property. The value of safety includes actions taken to promote the safety of the public (i.e., police services, fire services, emergency medical services and the like) as well as design of our infrastructure, operational policies, and the working conditions provided to our employees. Recognizing that some elements of the work of the City of Hutto come with a level of inherent danger, our goal is to mitigate that danger to the extent reasonable.*

Authentic – *We expect those acting on behalf of the organization to act with authenticity. Hutto is a unique community with a particular history, culture and character, and being authentic entails being genuine in both words and deeds to both the individual character and the character of the community as a whole.*

Progressive – *We expect those acting on behalf of the City of Hutto to seek creative solutions to problems. Being progressive entails making use of new or different methods, opportunities, and ideas with the intention of advancing the practice or outcome farther and faster than it would under the status quo.*

Strategic Focus Areas

- Public Safety
- Well Balanced & Diversified Economy
- Infrastructure & Growth
- Fiscal Responsibility
- Quality of Life & Services

Objectives

- *Generate a strategic path forward for enhancing the public safety apparatus, including police, fire and emergency medical services*
- *Create an aggressive, progressive economic development strategy for the community*
- *Maintain a positive and inspired workforce*
- *Enhance mobility within the city*
- *Enhance the overall governance of the community*
- *Construct and maintain infrastructure at the desired levels of service*
- *Ensure responsible fiscal stewardship through transparency and reporting*
- *Maintain an environment and quality of life that encompasses a safe, friendly, and entertaining atmosphere for all ages*

Organization: _____

City of Hutto Outside Agency Funding Application

Organization _____ Date _____

Proposal Writer _____ Title _____

Contact Person _____

Mailing Address _____

Street Address _____

Email _____ Fax _____

Contact Phone _____

Category (select one) ☐ Education ☐ Quality of Life ☐ Social Services

☐ Public Health & Safety

Funding Request Summary

Program/Agency Name: _____

Amount Requested ($): _____

Other Funding Sources ($): *Includes other grants (local and national), CARES ACT Funding*

Summary of Request (30 words or less):

Has your organization received outside funding before? How much and how was the money spent?

(For Staff/Committee Review Notes)

Received by: _____ Department: _____ Date: _____

Reviewed by: _____ Department: _____ Date: _____

Review Comments: _____

Recommendation(s): _____

Organization: _____

Part One: Agency Overview

Part 1A. Mission Statement and Overview of Organization

1. Provide the Mission Statement of the Organization:

1. Provide an organizational overview and list the general goals and objectives of the organization: (75 words or less):

Part 1B. Non-Profit Status & Board Members

1. List all members on the Board of Directors of the Agency, and indicate the member's position on the board, term, profession and City of residence ***(****attach Board Policy****)***:

2. List the provider of accounting/audit services to the organization *(attach the latest financial audit)*:

3. Is the organization incorporated as a non-profit under the laws of the State of Texas? If so, please provide the date of incorporation *(attach Articles of Incorporation)*:

Organization: _____

4. Is the agency tax exempt under Internal Revenue Code Section 501(c)(3)? *(attach copy of IRS status letter)*:

Part 1C. Organizational Programs

1. List all current programs the organization operates. Include a brief description of each program and list the intended benefits of each program. *(List current programs only. Please do not include new program(s) reflected in the funding being requested.)*

2. Of the total number of people you serve, what percentage are from the following residency areas:

Hutto	
Williamson County	
Outside Williamson County	

Part 1D. Community Resources & Support

1. Describe community financial support received. Include in-kind contributions such as donated goods or services.

Organization: _____

2. Describe your organization's volunteer base *(number, total volunteer hours, duties performed, recruitment)*:

3. Describe any collaboration with other organizations (*formal agreements, memorandum of understanding, etc.)*:

4. List fundraising events and the outcomes for the past year.

Fundraising Event and Date	**Amount Raised**
Total Raised	

Organization: _____

5. Describe planned events and their anticipated outcome for the next year.

Fundraising Event and Date	Projected Revenue
Total Projected Revenues	

6. Will the agency be able to continue to deliver service in the future without City funding? Describe the impact that a denial or reduction in City funding would have on the organization.

7. Is this organization the sole provider of this service in Hutto? List any entities that provide comparable services.

Organization: _____

Part Two: Funding Request

Part 2A. Funding Proposal

1. Describe how the agency proposes to use City funds. Be specific and detail how this funding will impact the citizens of Hutto. How does the funding request relate to the City's Strategic Vision?

Part 2B. Estimated City-Funded Expenditures for Program or Agency

1. List itemized expenditures by category for this grant request. Be specific. This information will be used to compile funding agreements for approved grants.

Category	Amount
Personnel	
Equipment	
Utilities	
Other expense categories (list):	
Total Request	

2. Is this a one-time request? ☐Yes ☐No

Organization: _____

3. Describe anticipated ongoing costs of this program for which funds may be requested in the future.

4. Is the organization requesting funds from other governmental entities, agencies, or other sources? If so, list all funding applied for and amount.

Organization: _____

Part 2C. Income Statement

FISCAL YEAR	
Revenue Source	**Agency Actual**
Income	
Fees	
Net Sales	
Contributions	
Individual	
Board	
Foundations/Trusts	
Special Events	
Organizations	
Civic	
Corporate	
Government Revenue	
City of Hutto	
Williamson County	
Federal	
State	
School district	
Other Local Sources	
Investment Income	
Other	
In-kind contributions	
Total Income	

Organization: _____

Part 2D. Expense Report

Expenses	Agency Actual
Salaries & Benefits	
Supplies	
Maintenance	
Purchased Services	
Capital Outlay	
Other	
In-kind Expenses	
Total Operating Expenses	

Surplus or (Deficit)[1]

Fiscal Year	Agency Actual
Income – Expenses=	

Explain Income Statement deficits

Organization: _____

Part 2E. Balance Sheet

	Current Fiscal Year_____	Prior Fiscal Year_____
Current Assets		
Cash & Cash Equivalents		
Investments		
Receivables		
Prepaid Expenses		
Total Current Assets		
Property & Equipment		
Property and Equipment		
Accumulated depreciation		
Total Property & Equipment		
Other Assets		
Total Assets		
Current Liabilities		
Accounts Payable		
Current portion of long-term debt		
Deferred Revenue		
Total Current Liabilities		

Organization: _____

Long Term Debt, less current portion		
Total Liabilities		
Fund Balance		
Unrestricted		
Temporarily restricted		
Permanently restricted		
Total Fund Balance		
Total Liabilities & Fund Balance		

("TOTAL ASSETS" *must equal* "TOTAL LIABILITIES & FUND BALANCE)

Part 2F.

Provide organization's most current balance sheet and indicate ending month.

Part 2G.

Provide organization's balance sheet as of the end of the prior year.

Additional Information

Certification:

I certify that all information reported in this application and attached is true, accurate and complete to the best of my belief and knowledge. I certify that I am authorized to make application on behalf of _____ (organization) and have been designated as such by the Board of Directors. I will provide written notice of any changes or additions to this information. I understand the agency may need to provide additional information during the application process and if funded. I understand a written agreement will be required between the organization and City upon award of funds.

Date: _____

Signature: _____

Title: _____

AGENDA ITEM REPORT
11.4.

To:	City Council
Subject:	Consideration and possible action regarding the removal of concrete barriers located within the Durango Farms Subdivision. (Matt Wojnowski)
Meeting:	Thursday, June 2, 2022
Department:	Public Works /
Staff Contact:	Matt Wojnowski

BACKGROUND INFORMATION:

On July 1, 2021, City Council voted and accepted the Memorandum of Understanding between the City of Hutto, Texas ("city") and MA Durango Farms, LLC ("Developer") regarding the installation of concrete safety barriers in the Durango Farms Subdivision. City staff will make the recommendation to remove the barricades on Main St. leaving East St. as emergency access only. East St. will have a gate and a lock box.

SUMMARY OF REQUEST:

We have had multiple citizens requests in the last week and a half asking if they can be removed for easier access to the subdivision as well as faster response time by emergency services.
There have been approximately 40 certificates of occupancy issued in Durango Farms Phase 1.
Congested traffic at the intersection of FM1660 and Mager Ln.

We feel that citizen concerns warrant the barricades being removed.

STAFF REVIEW:

FINANCIAL IMPACT:

POLICY IMPLICATIONS:

ATTACHMENTS:

MEMORANDUM OF UNDERSTANDING
between
MA Durango Farms, LLC and the City of Hutto, Texas

This memorandum is intended to provide a clear understanding between MA Durango Farms, LLC ("Developer") and the City of Hutto, Texas ("City") regarding the installation of concrete safety barriers in the Durango Farms subdivision ("Subdivision"), as requested by the City.

1. The City has requested that Developer install concrete safety barriers ("Barriers") at the locations shown on the attached Exhibit "A" (being on East Street, and on Main Street).

2. Developer has agreed to install the Barriers at its expense, in such locations, subject to the provisions herein.

3. Developer will install the Barriers at its expense, as part of the infrastructure being installed by Developer with the Subdivision. Final acceptance of the Subdivision infrastructure is contingent on proper installation of the Barriers.

4. The Barriers will be designed and installed in accordance with the designs shown on the attached Exhibit "B". The City shall be entitled to inspect and approve the Barriers and the installation.

5. Once the Barriers are installed and have been approved, and the Subdivision infrastructure has been accepted, then the Barriers shall become the property of the City, as with other public improvements.

6. Following installation and acceptance, the City shall have the right to remove, replace, or modify the Barriers.

7. Following installation and acceptance, the Developer shall not be responsible to repair, remove, or replace the Barriers (unless Developer or its contractors or agents caused damage to the Barriers), nor shall Developer be responsible for any liability for damages to person or property as a result of the Barriers having been installed at City's request.

ACKNOWLEDGED this 1st day of July, 2021.

MA DURANGO FARMS, LLC,
a Texas limited liability company

By:_____
Wyatt Henderson, Manager

CITY OF HUTTO, TEXAS

By:_____
Warren Hutmacher, City Manager

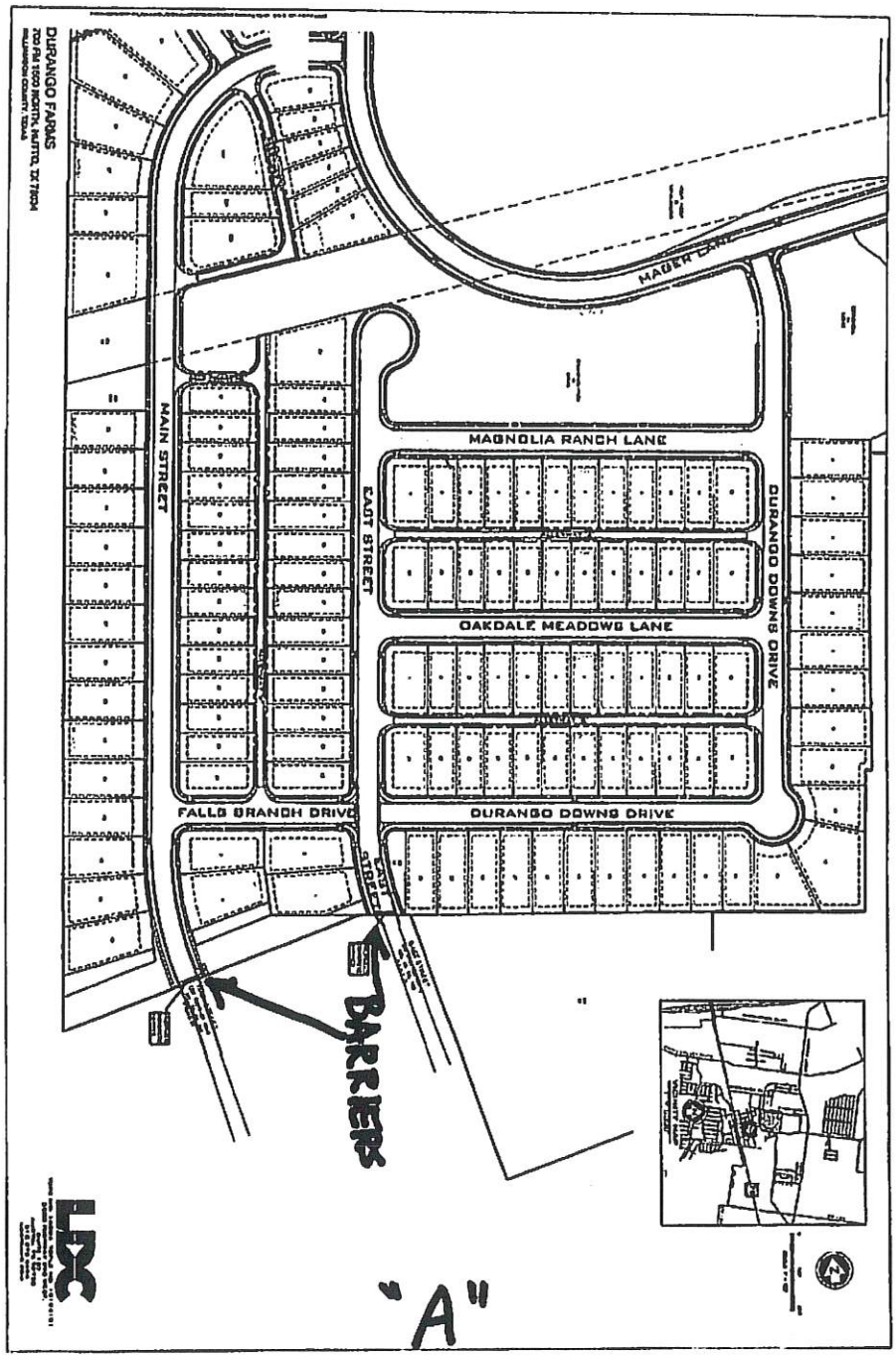
DURANGO FARMS
MAIN STREET
MAGNOLIA RANCH LANE
EAST STREET
OAKDALE MEADOWS LANE
DURANGO DOWNS DRIVE
FALLS BRANCH DRIVE
DURANGO DOWNS DRIVE
BARRIERS
"A"

"B"

END VIEW (CSB) QUICK-BOLT

ELEVATION (CSB) QUICK-BOLT

ELEVATION VIEW SHOWING JOINT CONNECTION "QUICK-BOLT"

Joint Connection (Type Q)

TOP VIEW
PRECAST (CSB) WITH J-J HOOKS

END VIEW
J-J HOOK CONNECTION

Joint Connection (Type J)

VIEW FROM ABOVE
J-J HOOK CONNECTION

Proprietary Joint Connections (CSB)

Two proprietary joint connections are [illegible] as alternates to the type of connection shown, such as, "Quick Joint" connections [illegible]

J-J Hooks by Dual-Hat Industries, [illegible] Quick-Bolt by Dean Concrete, [illegible]

If any of these connection systems are mandatorily specified for the plans, prior approval for alternate systems must be obtained, details of the connection components and barrier reinforcement for cross systems, will be shown on the manufacturer's shop drawings furnished to the Engineer.

SHEET 2 OF 2

Texas Department of Transportation

Standard Design Standard

CONCRETE SAFETY BARRIER (F-SHAPE)

PRECAST BARRIER (TYPE 1)

CSB(1)-10

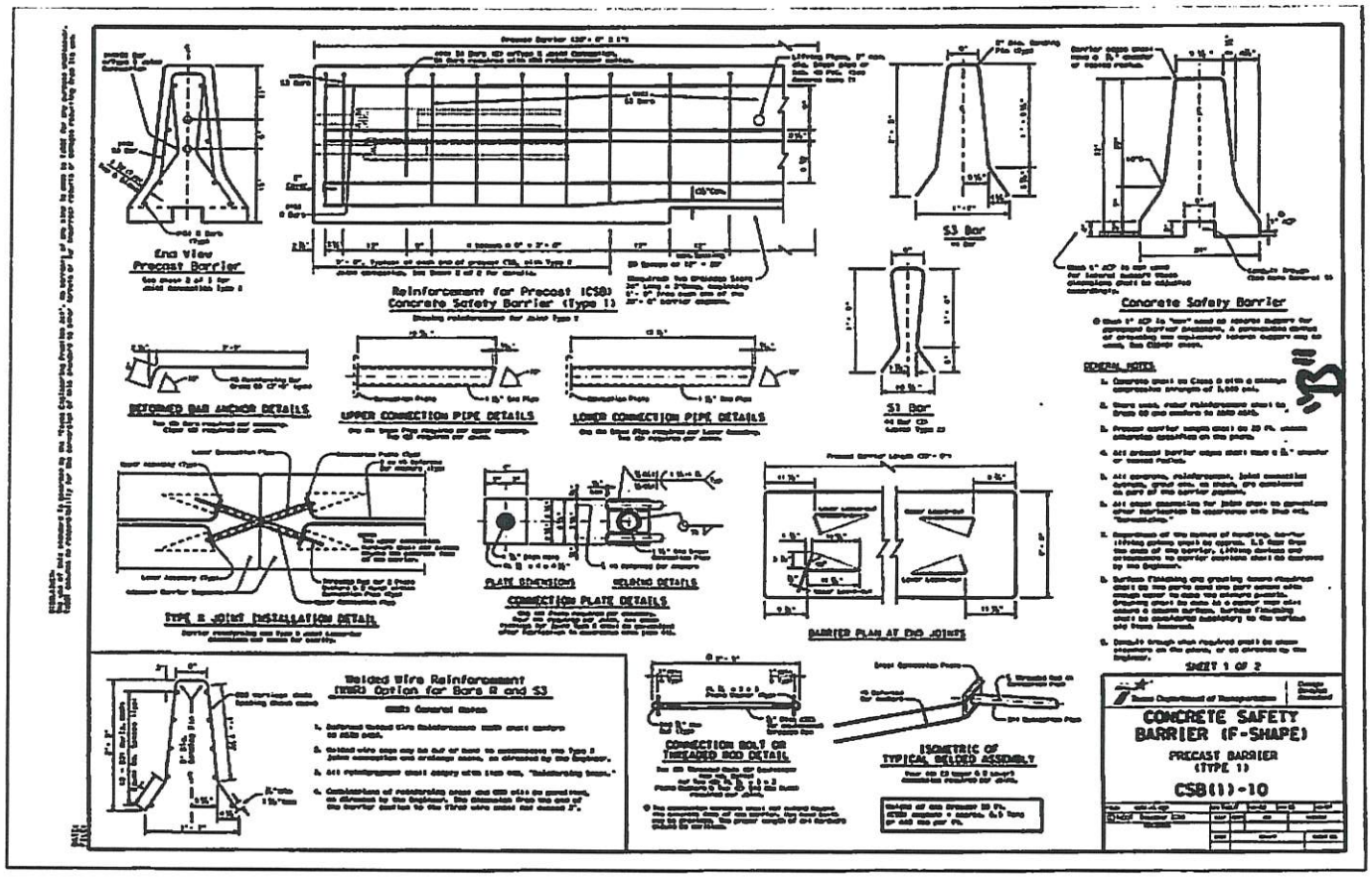
End View
Precast Barrier
Reinforcement for Precast (CSB) Concrete Safety Barrier (Type 1)
S3 Bar
Concrete Safety Barrier
GENERAL NOTES
DEFORMED BAR ANCHOR DETAILS
UPPER CONNECTION PIPE DETAILS
LOWER CONNECTION PIPE DETAILS
S1 Bar
TYPE B JOINT INSTALLATION DETAIL
PLATE DIMENSIONS
HOLDING DETAILS
CONNECTION PLATE DETAILS
BARRIER PLAN AT END JOINTS
Welded Wire Reinforcement
(WWR) Option for Bars B and S3
CONNECTION BOLT OR THREADED ROD DETAIL
ISOMETRIC OF TYPICAL WELDED ASSEMBLY
SHEET 1 OF 2
CONCRETE SAFETY BARRIER (F-SHAPE)
PRECAST BARRIER
(TYPE 1)
CSB(1)-10

AGENDA ITEM REPORT
11.5.

To:	City Council
Subject:	Discussion and possible action to approve and/or confirm board expiration dates and assign seat numbers to City board, commission and task force members (Mayor Pro Tem Peter Gordon and Councilmember Krystal Kinsey)
Meeting:	Thursday, June 2, 2022
Department:	City Council /
Staff Contact:	Angela Walton

BACKGROUND INFORMATION:

On January 6, 2022 the City Council adopted a new set of Council Protocols. Contained within this document was a new process for nominating individuals to boards, commissions and task forces, where a Nominating Committee was formed to bring nominations to the Council, rather than each Council member being responsible to nominate one person for each board, commission or task force. Since that date, the expiration dates for board and commission member seats has become unclear, since appointments were no longer clearly tied to the expiration of the corresponding City Council place number.

SUMMARY OF REQUEST:

This recommendation would resume assigning specific seat numbers for all board, commission and task force members to ensure they are being appointed to the proper length of terms. In the event of early resignation or removal, the replacement appointee would then fill the remainder of the unexpired term, instead of starting a new term upon their appointment. This proposal would also allow all boards, commissions and task forces to be consistent in the expiration dates falling at the end of June each year, where Task Forces are currently set to expire in February, but all other boards and commissions expire in June. This proposal has existing board and commission members being assigned expiration dates based on their current length of service.

STAFF REVIEW:

FINANCIAL IMPACT:

None.

POLICY IMPLICATIONS:

AGENDA ITEM REPORT
11.5.

ATTACHMENTS:

Seat #	Board/Commission/TF	Office	Date Appointed
	Building & Standards Commission (no Council Liaison)		
1	Kurt Schwerdfeger		7/1/2021
2	Rick Hudson		???
3	Vacant		
4	Vacant		
5	Vacant		
6	Vacant		
7	Vacant		
	Diversity & Inclusion Commission (Krystal Kinsey Council Liaison 7/15/2021)		
1	Kandice Walker		10/21/2021
2	Gina Chen		1/6/2022
3	Brian Thompson	Chair	8/27/2020
4	Marlise Prieto		8/5/2021
5	Lacey Ranson-Hudson		2/10/2022
6	Anna Gonzales		???
7	Tara Spoons		9/17/2020
	Ethics Review Commission (no Council Liaison)		
1	Jane Wrinkle		2/4/2021
2	Kelly Louis		8/19/2021
3	April Willis		2019
4	Lori Brown	Vice-Chair	11/4/2021
5	Abel Landin		6/17/2021
6	Bill Kohl		2019
7	Christina Garza		12/17/2020
	Historic Preservation Commission (Peter Gordon Council Liaison 5/19/22)		
1	Norman Delay		2/17/2022
2	Robert Lykins		5/20/2021
3	Curtis Orton	Vice-Chair	2019
4	Kathy Hoover		9/16/2021
5	Jon Stephenson		5/20/2021
6	Alexis Ortiz		10/21/2021
7	DeAnne Worley	Chair	2019
	Library Advisory Board (Dan Thornton Council Liaison 2/10/2022)		
1	Robin Bell		1/6/2022
2	Suzanne Caulfield		3/17/2022
3	Tara Chappell	Chair	2019
4	Marcus Coleman		1/6/2022
5	Bruce Anderson		3/17/2022
6	Emma Peters		12/2/2021
7	Nelida Ortiz		7/15/2021
	Parks Advisory Board (Amberley Kolar Council Liaison 5/19/2022)		
1	Vacant		
2	Sharon Dyer		6/17/2021
3	David Meyer		9/17/2020
4	Deborah McPherson		8/19/2021
5	Katie Weiss	Vice-Chair	7/15/2021

6	Rose McMillin		2019
7	Perry Savard	Chair	2019
	Planning & Zoning Commission (Robin Sutton Council Liaison 5/19/2022)		
1	David Meyer		7/15/2021
2	Bryan Lee		6/3/2021
3	Jerica Lawyer		7/2/2020
4	Kurt Schwerdfeger		7/1/2021
5	Susanna Boyer		6/3/2021
6	Vacant		
7	Rick Hudson	Chair	2019
	Zoning Board of Adjustments (No Council Liaison)		
1	Ray Alba		6/17/2021
2	Vacant		
3	Robert Balcer		8/19/2021
4	John Marines		6/3/2021
5	Anthony DeFrancisis		2/17/2022
6	Bryan Lee		6/3/2021
7	Norman Delay		2/17/2022
A1	Rick Hudson	Alternate	11/4/2021
A2	Vacant	Alternate	
A3	Vacant	Alternate	
	Accessibility Task Force (Krystal Kinsey Council Liaison 1/20/2022)		
1	Laurie Purser Stockman		2/25/2021
2	Jane Wrinkle		2/4/2021
3	Vacant		
4	Vacant		
5	Vacant		
6	Vacant		
7	Vacant		
	Communications Task Force (Peter Gordon Council Liaison unknown date)		
1	Cassandra Balderas		11/4/2021
2	Andrew Ingrassia		3/17/2022
4	Vacant		
5	Dana Wilcott		3/17/2022
3	Jane Wrinkle		3/17/2022
6	Sydnee Johnson		3/17/2022
7	Justin Shepherd		3/17/2022
	Emergency Preparedness Task Force (Mike Snyder Council Liaison 7/15/2021)		
1	Thomas Quoma	Chair	6/3/2021
2	Donna Jones		6/17/2021
3	Stevie Jones		6/17/2021
4	Matthew Selby		7/15/2021
5	Marcus Coleman		1/6/2022
6	Pete Palumbo		3/17/2022
7	Cat Skeen		5/5/2022

Term Expires	Term Length
6/30/2023	2 Years
6/30/2022	2 Years
6/30/2023	2 Years
6/30/2022	2 Years
6/30/2023	2 Years
6/30/2022	2 Years
6/30/2023	2 Years
6/30/2023	3 Years
6/30/2024	3 Years
6/30/2022	3 Years
6/30/2023	3 Years
6/30/2024	3 Years
6/30/2022	3 Years
6/30/2022	3 Years
6/30/2023	3 Years
6/30/2024	3 Years
6/30/2022	3 Years
6/30/2023	3 Years
6/30/2024	3 Years
6/30/2022	3 Years
6/30/2022	3 Years
6/30/2023	3 Years
6/30/2024	3 Years
6/30/2022	3 Years
6/30/2023	3 Years
6/30/2024	3 Years
6/30/2022	3 Years
6/30/2022	3 Years
6/30/2023	3 Years
6/30/2024	3 Years
6/30/2022	3 Years
6/30/2023	3 Years
6/30/2024	3 Years
6/30/2022	3 Years
6/30/2022	3 Years
6/30/2023	3 Years
6/30/2024	3 Years
6/30/2022	3 Years
6/30/2023	3 Years
6/30/2024	3 Years

Places 1 & 4	2023
Places 2 & 5	2024
Places 3, 6 & Mayor	2022

6/30/2022	3 Years
6/30/2022	3 Years
6/30/2023	3 Years
6/30/2024	3 Years
6/30/2022	3 Years
6/30/2023	3 Years
6/30/2024	3 Years
6/30/2022	3 Years
6/30/2022	3 Years
6/30/2023	2 Years
6/30/2022	2 Years
6/30/2023	2 Years
6/30/2022	2 Years
6/30/2023	2 Years
6/30/2022	2 Years
6/30/2023	2 Years
6/30/2023	2 Years
6/30/2022	2 Years
6/30/2023	2 Years
6/30/2022	1 Year
6/30/2022	1 Year
6/30/2022	1 Year
6/30/2022	1 Year
6/30/2022	1 Year
6/30/2022	1 Year
6/30/2022	1 Year
6/30/2022	1 Year
6/30/2022	1 Year
6/30/2022	1 Year
6/30/2022	1 Year
6/30/2022	1 Year
6/30/2022	1 Year
6/30/2022	1 Year
6/30/2022	1 Year
6/30/2022	1 Year
6/30/2022	1 Year
6/30/2022	1 Year
6/30/2022	1 Year
6/30/2022	1 Year
6/30/2022	1 Year

AGENDA ITEM REPORT
11.6.

To:	City Council
Subject:	Consideration and possible action regarding IBCA BBQ Cookoff, Mayor's involvement and the process related too, including but not limited to emails, text messages and legal memorandum from and including the City Council, City Staff and City Attorney into possible Interference with Administration, Alleged Interactions with Members of the Public, Alleged Interactions with the City Manager and to the release of all information completely unredacted. (City Council)
Meeting:	Thursday, June 2, 2022
Department:	City Council /
Staff Contact:	

BACKGROUND INFORMATION:

Item for City Council discussion at Mayor Snyder's request.

SUMMARY OF REQUEST:

STAFF REVIEW:

FINANCIAL IMPACT:

POLICY IMPLICATIONS:

ATTACHMENTS: